US 20090231135A1

(19) United States

(12) Patent Application Publication

Chaves et al.

(10) Pub. No.: US 2009/0231135 A1

(43) Pub. Date: Sep. 17, 2009

(54) ENHANCED ITEM TRACKING USING SELECTIVE QUERYING

(76) Inventors: **Leonardo Weiss F. Chaves**, Karlsruhe (DE); **Martin Berchtold**, Karlsruhe (DE); **Christian Decker**, Karlsruhe (DE); **Till Riedel**, Karlsruhe (DE)

Correspondence Address:
FISH & RICHARDSON, P.C.
PO BOX 1022
MINNEAPOLIS, MN 55440-1022 (US)

(21) Appl. No.: **12/046,371**

(22) Filed: **Mar. 11, 2008**

Publication Classification

(51) **Int. Cl.**
G08B 13/14 (2006.01)

(52) **U.S. Cl.** **340/572.1**

(57) **ABSTRACT**

Enhanced item tracking using selecting querying, in which a scan envelope of a mobile reader is defined, items expected within the defined scan envelope are determined, and a low-level query including a tuning parameter that selectively includes or excludes the determined items is generated. The approach also includes transmitting the low-level query via the mobile reader, and outputting an indicia of items that respond to the low-level query.

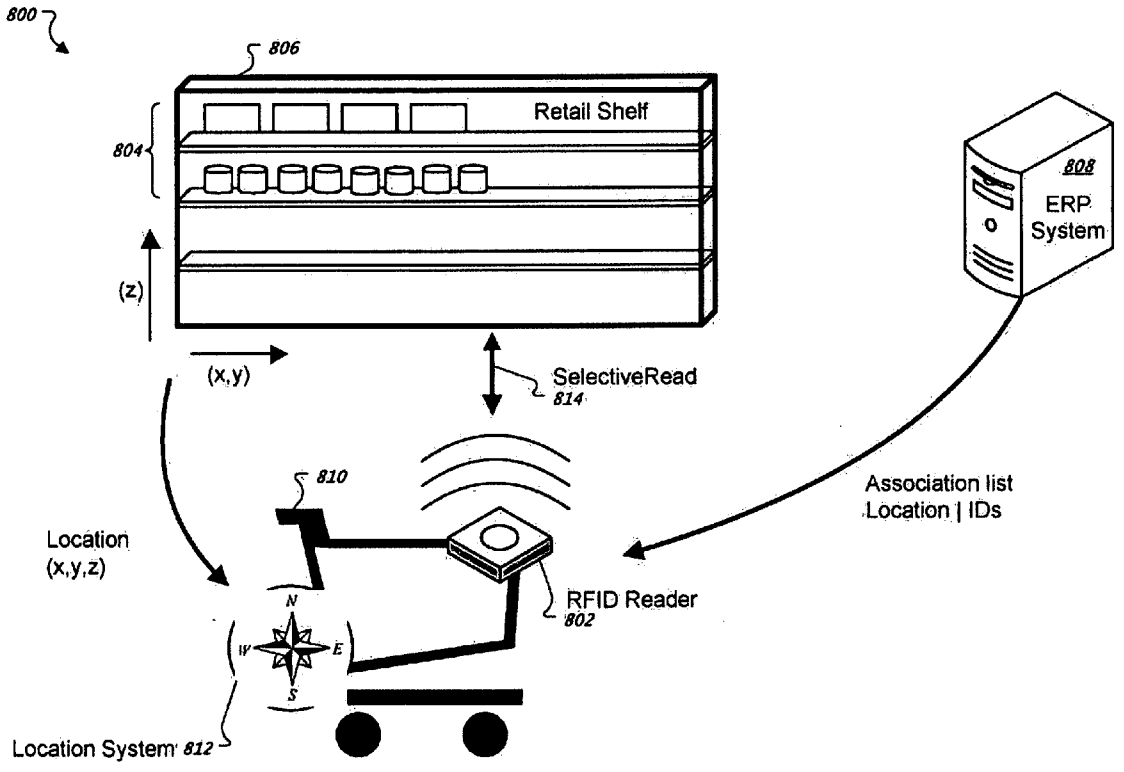

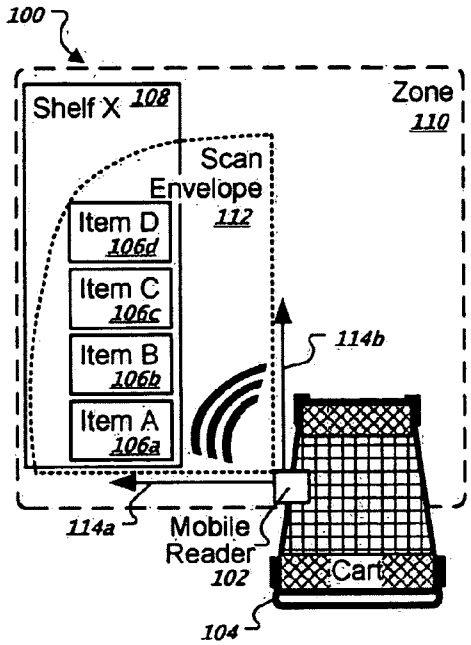

FIG. 1A

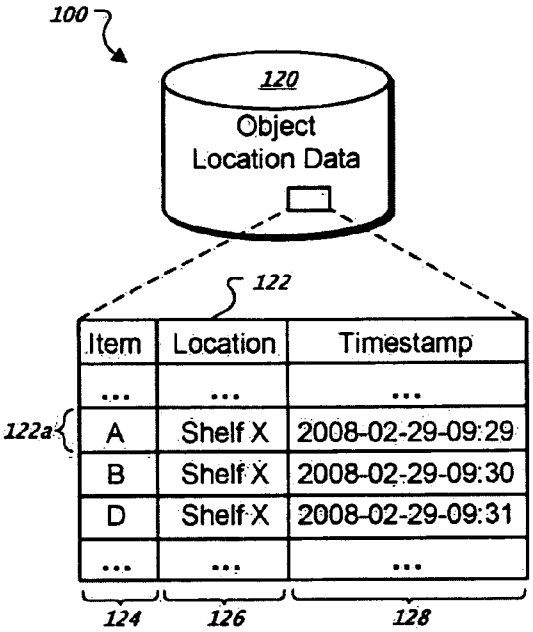

FIG. 1B

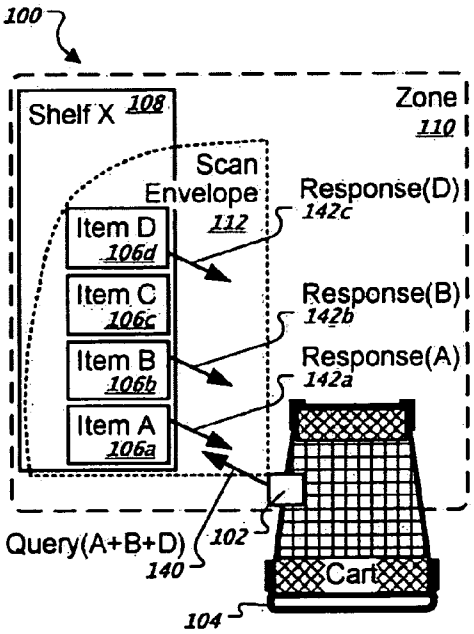

FIG. 1C

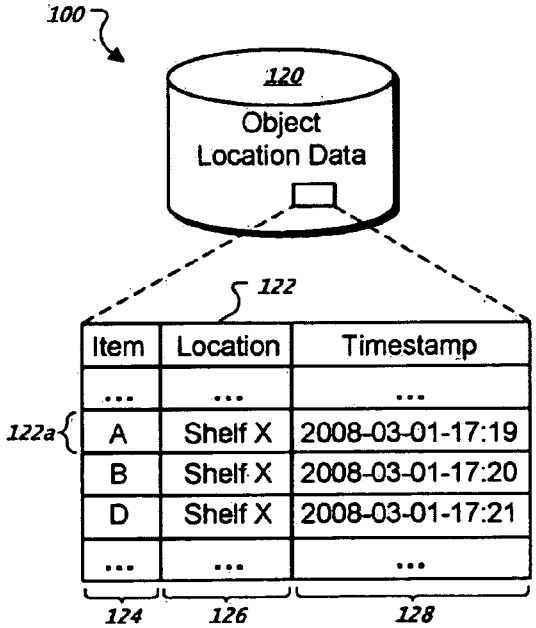

FIG. 1D

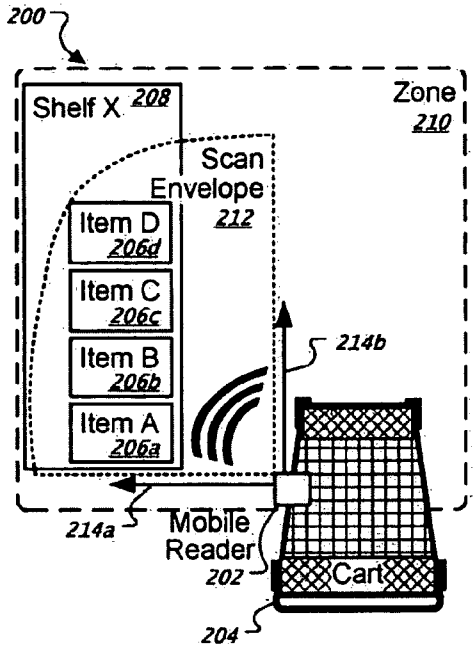

FIG. 2A

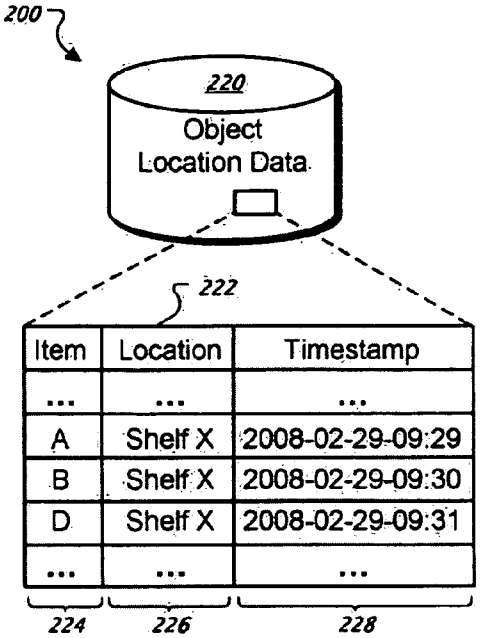

FIG. 2B

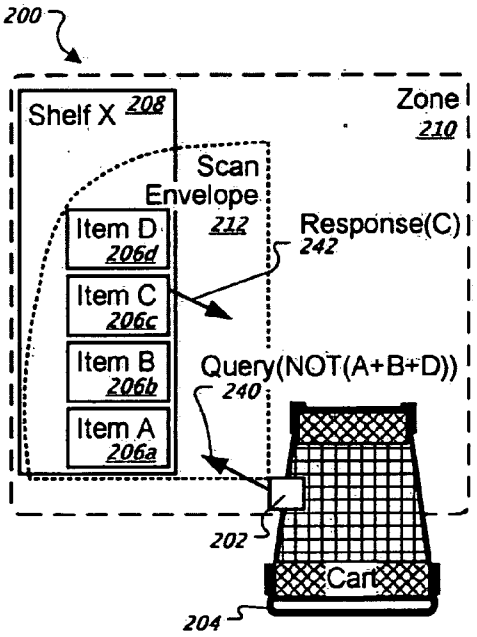

FIG. 2C

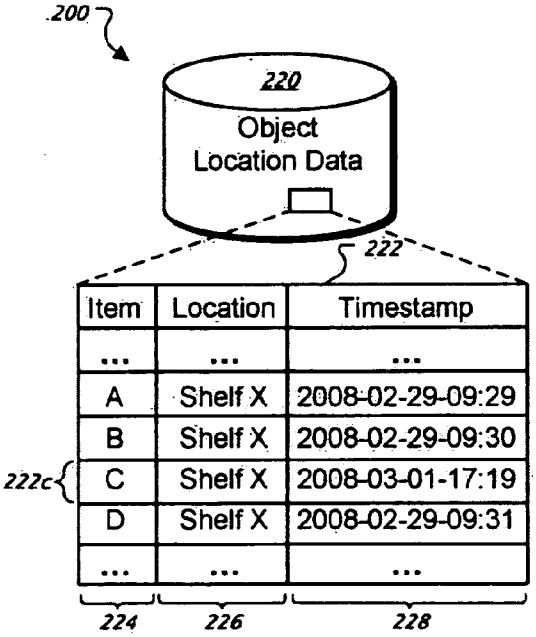

FIG. 2D

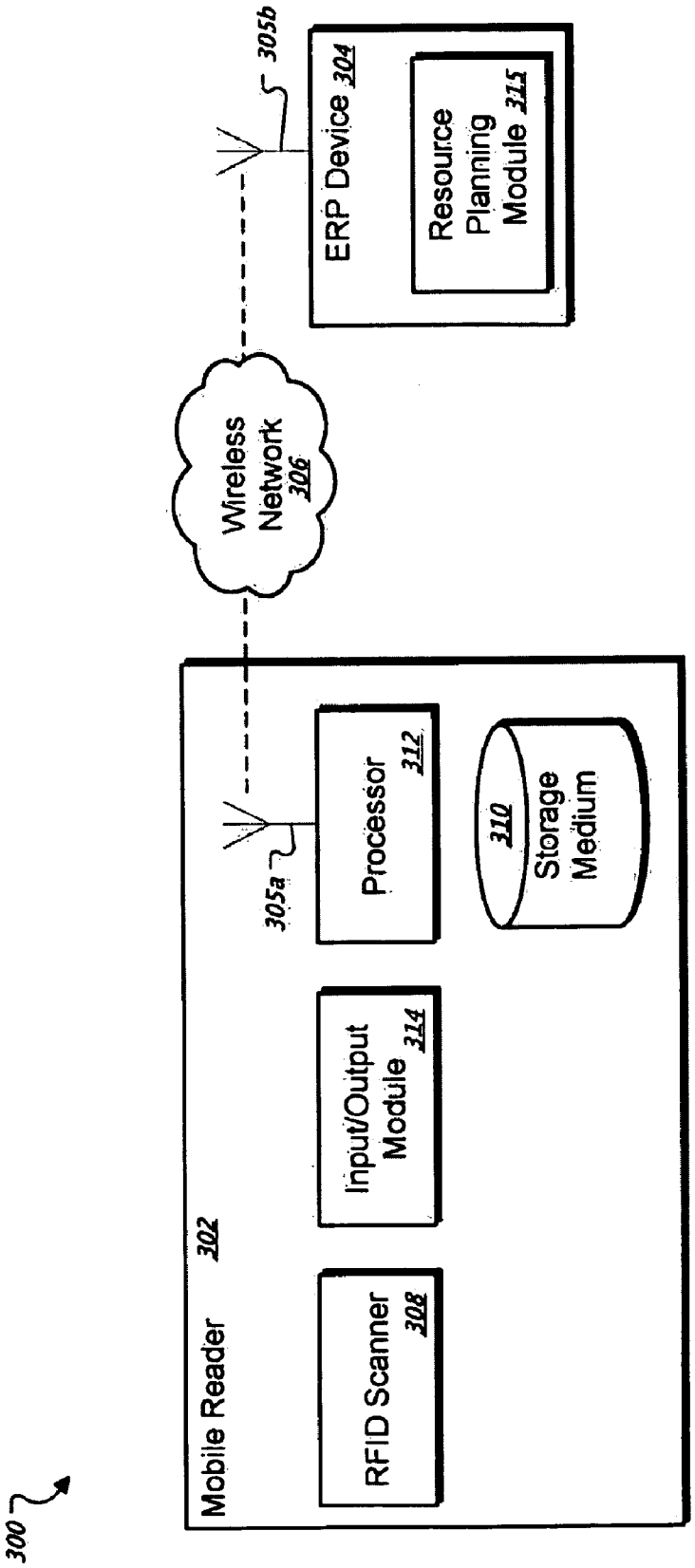
300
Mobile Reader
302
RFID Scanner
308
Input/Output
Module
314
305a
Processor
312
310
Storage
Medium
Wireless
Network
306
305b
ERP Device
304
Resource
Planning
Module
315

FIG. 3

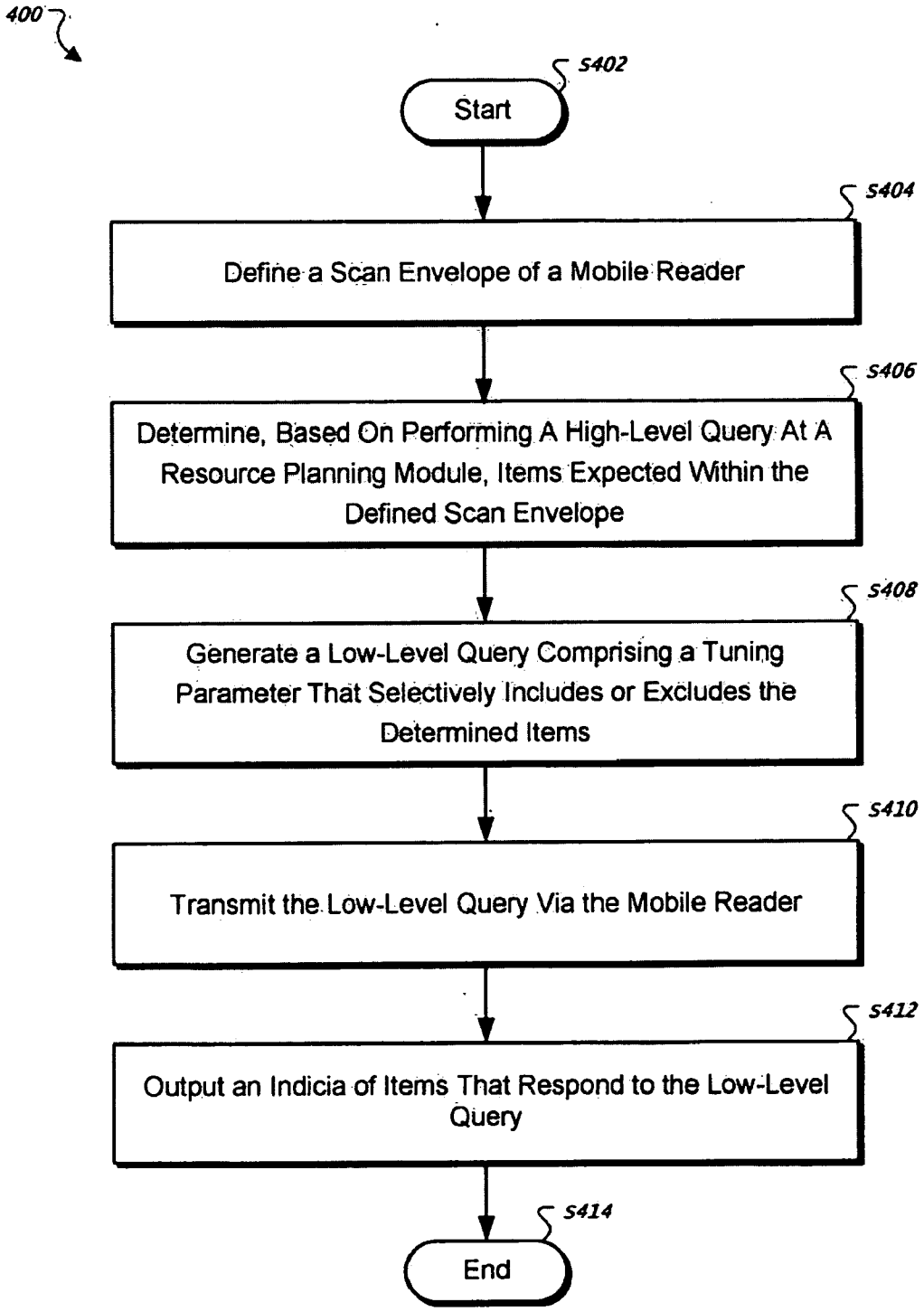
400
S402
Start
S404
Define a Scan Envelope of a Mobile Reader
S406
Determine, Based On Performing A High-Level Query At A Resource Planning Module, Items Expected Within the Defined Scan Envelope
S408
Generate a Low-Level Query Comprising a Tuning Parameter That Selectively Includes or Excludes the Determined Items
S410
Transmit the Low-Level Query Via the Mobile Reader
S412
Output an Indicia of Items That Respond to the Low-Level Query
S414
End

FIG. 4

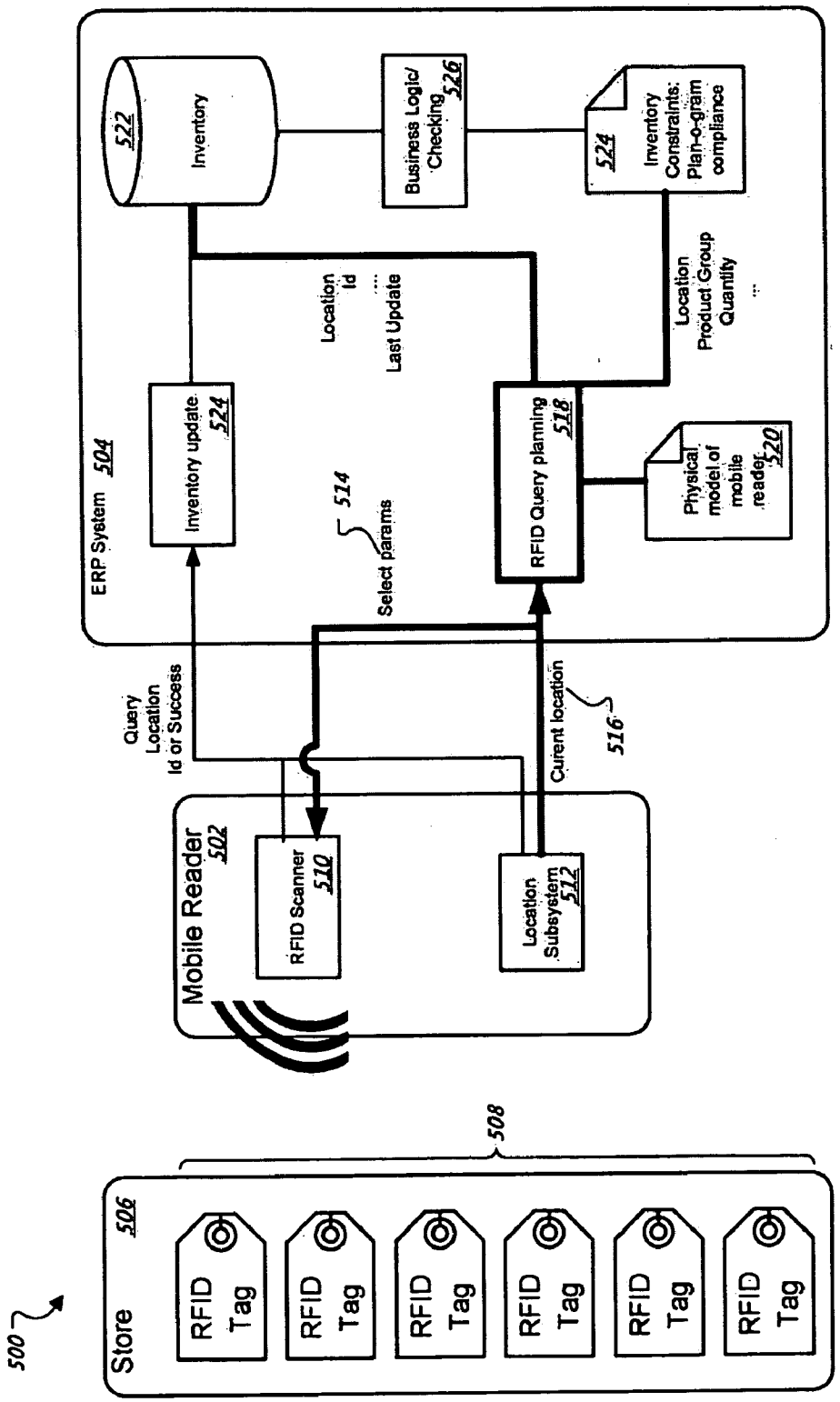
500
Store
506
RFID Tag
RFID Tag
RFID Tag
RFID Tag
RFID Tag
RFID Tag
508
Mobile Reader
502
RFID Scanner
510
Location Subsystem
512
Query Location Id or Success
Curent location
516
ERP System
504
Inventory update
524
Select params
514
Location Id
Last Update
RFID Query planning
518
Physical model of mobile reader
520
Location Product Group Quantity
Inventory
522
Business Logic/ Checking
526
Inventory Constraints: Plan-o-gram compliance
524

FIG. 5

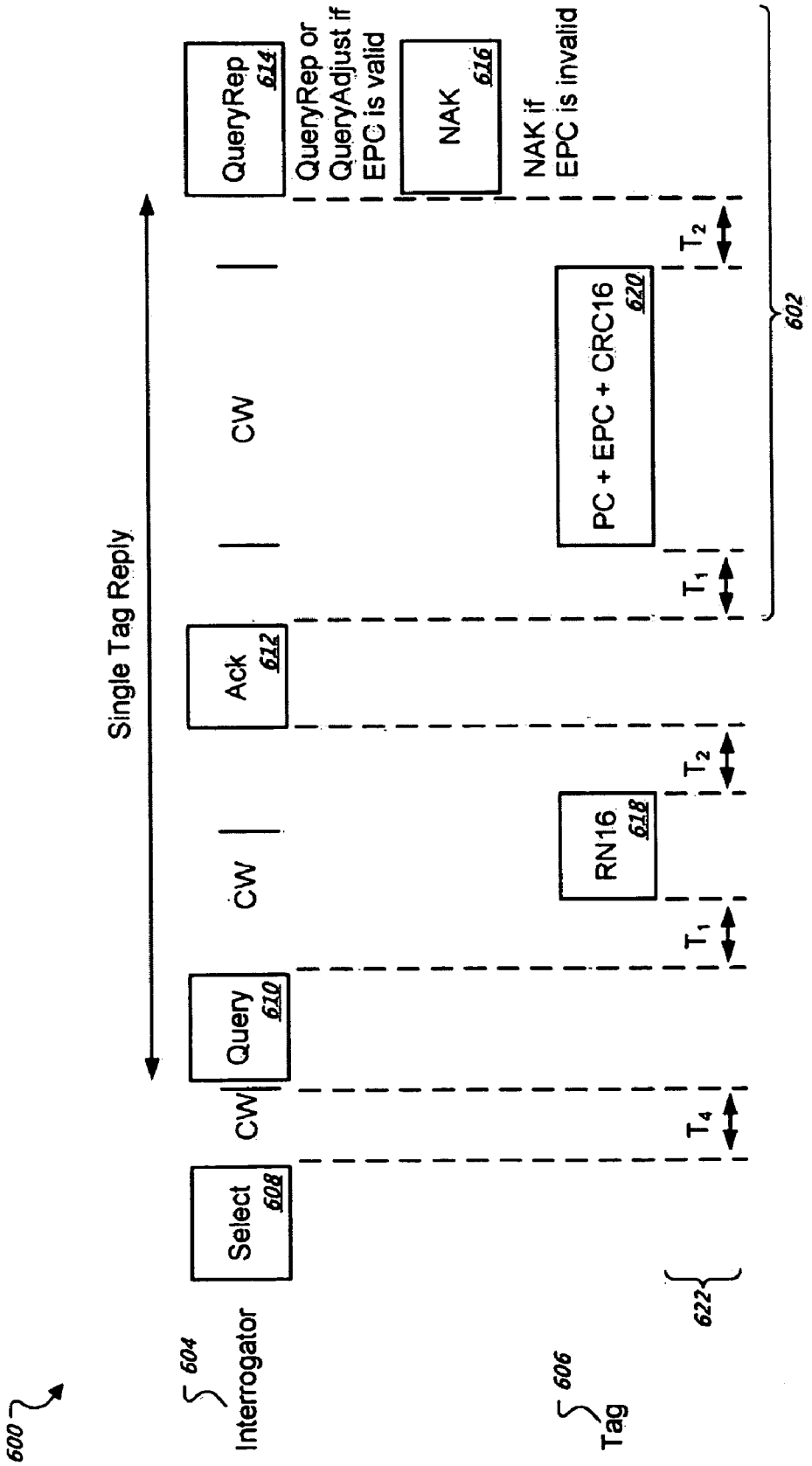
600
604
Interrogator
606
Tag
Single Tag Reply
Select
608
CW
Query
610
CW
Ack
612
CW
QueryRep
614
RN16
618
NAK
616
PC + EPC + CRC16
620
QueryRep or
QueryAdjust if
EPC is valid
NAK if
EPC is invalid
T_4
T_1
T_2
T_1
T_2
622
602

FIG. 6

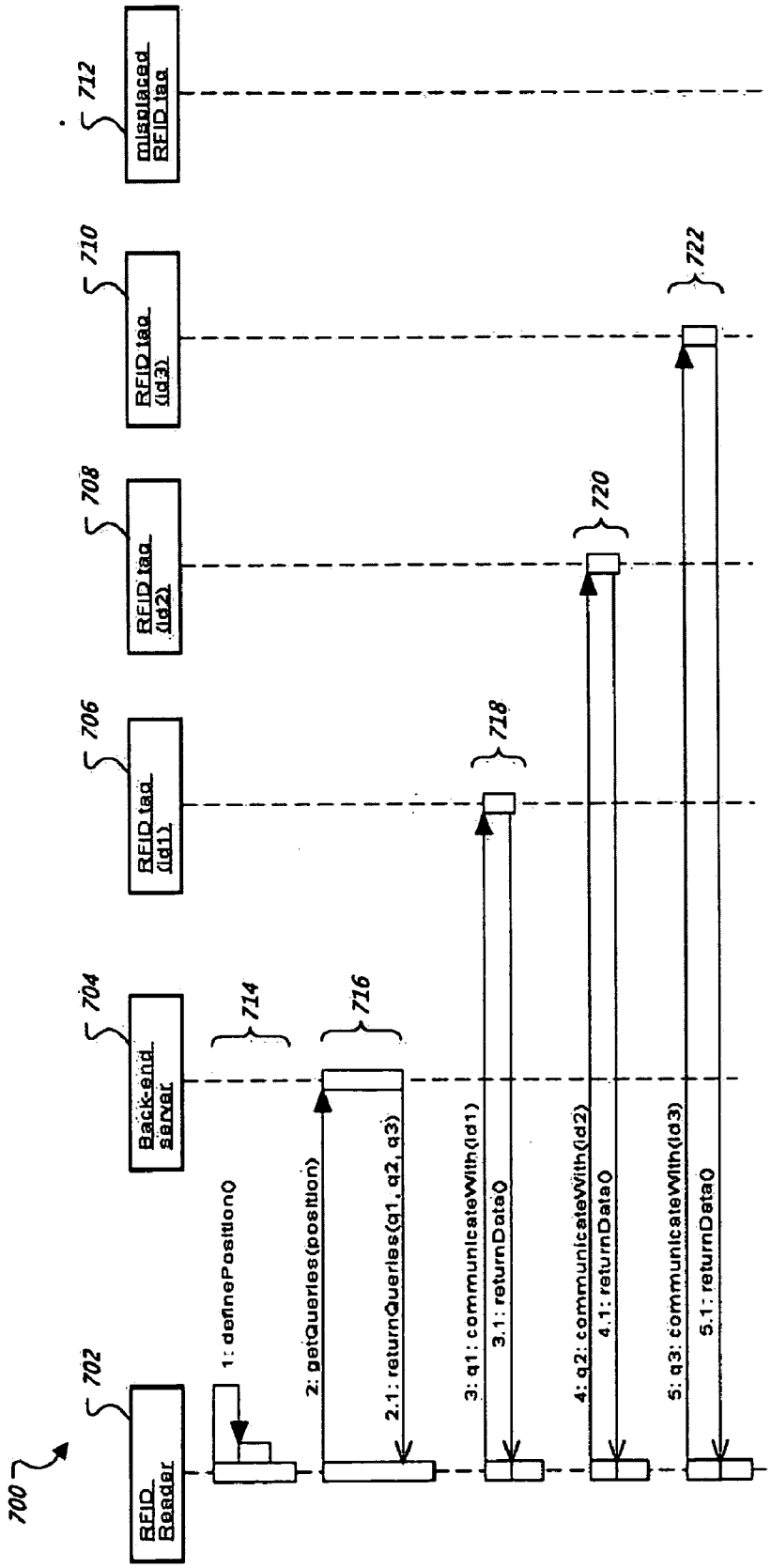
700
RFID Reader
702
Back-end server
704
RFID tag (id1)
706
RFID tag (id2)
708
RFID tag (id3)
710
misplaced RFID tag
712
1: definePosition()
714
2: getQueries(position)
716
2.1: returnQueries(q1, q2, q3)
3: q1: communicateWith(id1)
718
3.1: returnData()
4: q2: communicateWith(id2)
720
4.1: returnData()
5: q3: communicateWith(id3)
722
5.1: returnData()

FIG. 7

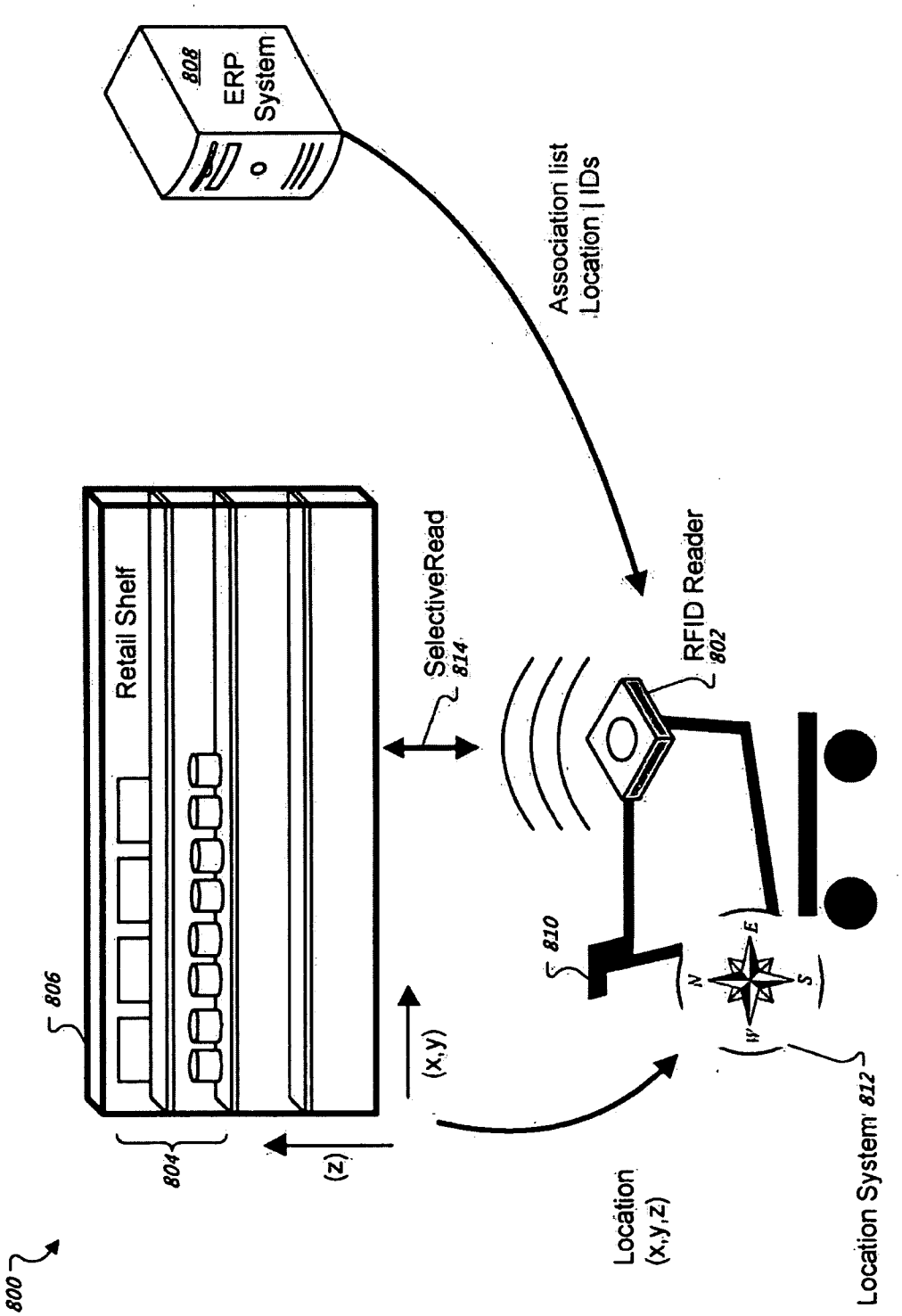
800
806
Retail Shelf
804
(z)
(x,y)
SelectiveRead
814
808
ERP
System
Association list
Location | IDs
RFID Reader
802
810
Location
(x,y,z)
Location System 812
N
E
S
W

FIG. 8

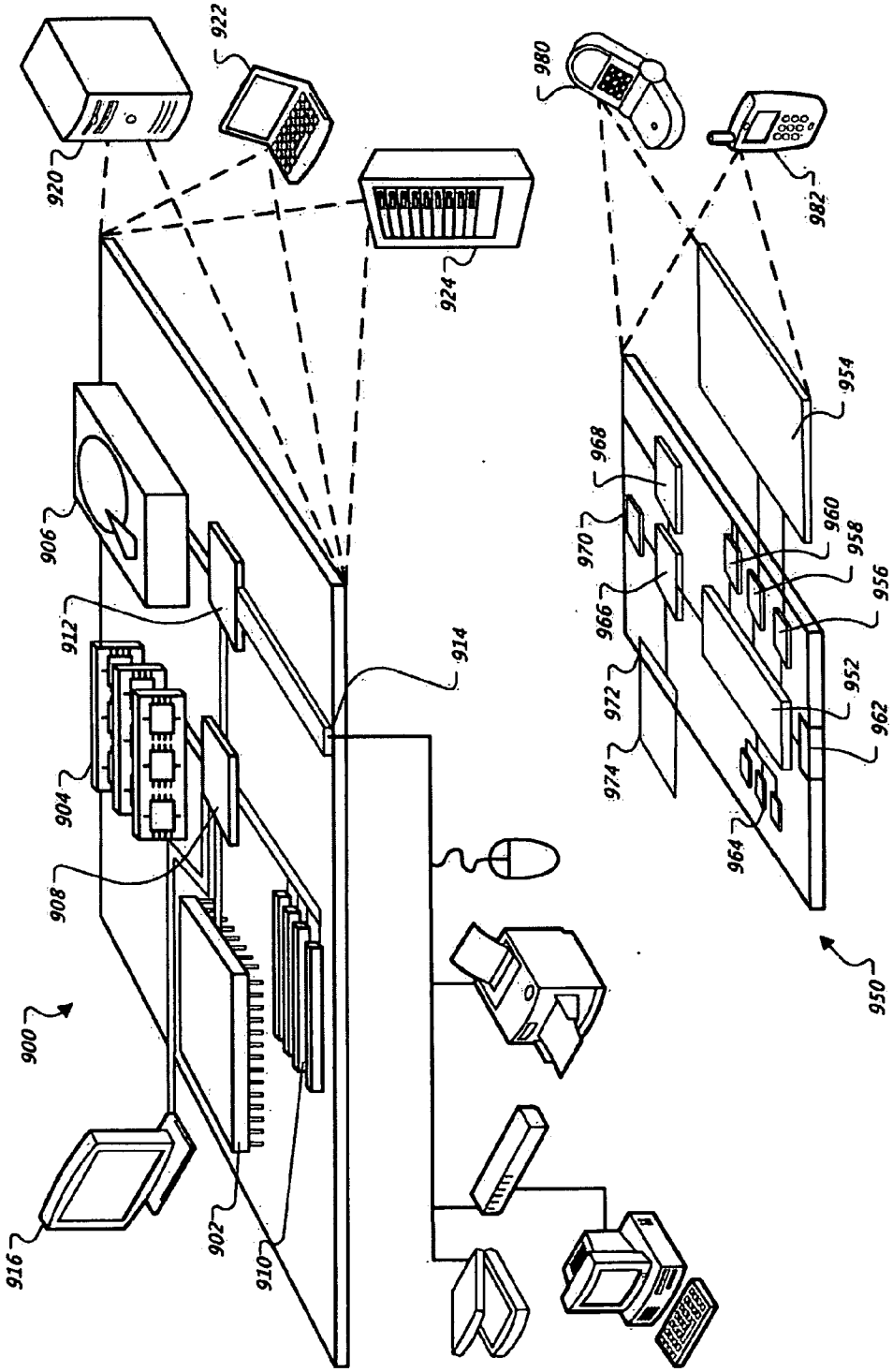
900
902
904
906
908
910
912
914
916
920
922
924
950
952
954
956
958
960
962
964
966
968
970
972
974
980
982

FIG. 9

ENHANCED ITEM TRACKING USING SELECTIVE QUERYING

FIELD

[0001] The present disclosure generally relates to reading RFID tags.

BACKGROUND

[0002] Radio Frequency IDentification (RFID) technology is used as an automatic identification method, relying on storing and remotely retrieving data using devices called RFID tags, or transponders. For example, an RFID tag may be attached to (or incorporated into) an object such as a product, animal or person for the purpose of identification using radio waves. Some RFID tags may be read from several meters away and beyond the line of sight of the reader. A significant thrust in RFID use is in enterprise supply chain management, improving the efficiency of inventory tracking and management. For example, Enterprise Resource Planning (ERP) systems may use RFID technology to track inventory in stores, warehouses, or other locations.

SUMMARY

[0003] According to one general implementation, an RFID device is adjusted to selectively query those items known to be within range of the device, or to perform a more general query of objects within the range except for those known items. Such selective querying may be based on performing a high-level query at an enterprise resource system, for example to determine which items or products are expected at a given location.

[0004] In doing so, it is possible to reduce the number of irrelevant or incidental query responses, and to thereby increase computational effectiveness of an associated system. As this approach may reduce the amount of filtering that would otherwise be required to process relevant query responses, selective querying may be useful in a variety of business contexts, including the retail context.

[0005] According to another general implementation, a computer-implemented process includes defining a scan envelope of a mobile reader, determining, based on performing a high-level query at a resource planning module, items expected within the defined scan envelope, and generating a low-level query including a tuning parameter that selectively includes or excludes the determined items. The process also includes transmitting the low-level query via the mobile reader, and outputting an indicia of items that respond to the low-level query.

[0006] Implementations may include one or more of the following features. For instance, the scan envelope may be defined based on determining absolute or relative location and scanning direction of the mobile reader. The location of the mobile reader may be determined using Active Bat, Cricket, an infrared cell-of-origin system, a radio beacon, or an active or passive RFID device. The indicia may further include a quantity of the items that respond to the low-level query, or a unique identifier of each of the items that responds to the low-level query.

[0007] In further examples the process also includes determining, based on a tuning parameter that selectively excludes the determined items and further based on the output indicia, whether a plan-o-gram is satisfied, or generating, based on a tuning para meter that selectively includes the determined items and further based on the output indicia, an inventory of the items that respond to the low-level query. Outputting the indicia may further include transmitting the indicia to a back-end enterprise resource planning system. Outputting the indicia may further include updating, using the indicia, a database disposed on the mobile reader. The mobile reader may be a mobile RFID device, and the low-level query may be formatted according to the EPC Gen 2 standard. The low-level query may further include a frame length parameter, generated based on a quantity of the items expected within the defined scan envelope. The process may also include iteratively modifying the frame length parameter based on a quantity of the items that respond to the low-level query.

[0008] In further examples; determining the items expected within the defined scan envelope may further include transmitting, from the mobile device and to a resource planning module, a parameter that describes the defined scan envelope, generating, at the resource planning module, the high-level query, the high-level query further including the transmitted parameter, performing the high-level query at the resource planning module, and receiving, at the mobile device and from the resource planning module, a response to the high-level query, the response including the items expected within the defined scan envelope. Additionally, determining the items expected within the defined scan envelope may further include performing the high-level query at the resource planning-module, iteratively receiving, at the mobile device and from the resource planning module, a response to the high-level query, the response including items expected within a plurality of locations, and determining, at the mobile reader and based on comparing the items expected within the plurality of locations with the defined scan envelope, the items expected within the defined scan envelope.

[0009] Moreover, in other examples, determining the items expected within the defined scan envelope may further include transmitting, from the mobile reader to the resource planning module and based on receiving a request, data indicative of the defined scan envelope, performing the high-level query at the resource planning module, and receiving, at the mobile reader and based on performing the high-level query, data indicative of the items expected within the defined scan envelope. Additionally, determining the items expected within the defined scan envelope may include performing the high-level query at the resource planning module, receiving, at the mobile reader and from the resource planning module and based on performing the high-level query, a list of items expected within a plurality of locations, and determining, at the mobile reader and based on comparing the list of items expected within the plurality of locations with the defined scan envelope, the items expected within the defined scan envelope.

[0010] In additional examples, outputting the indicia may further include, displaying the indicia to a user. The process may include detecting an out-of-stock condition based on the output indicia. Defining the scan envelope may further include determining a retail shelf at least partially disposed within the scan envelope. The process may also include receiving, from a back-end enterprise resource planning system, an inventory list, where outputting the indicia of items that respond to the low-level query further includes updating the inventory list with the indicia.

[0011] In another general implementation, a computer program product is tangibly embodied in a machine-readable medium. The computer program product includes instruc-

tions that, when read by a machine, operate to cause data processing apparatus to define a scan envelope of a mobile reader, to determine, based on performing a high-level query at a resource planning module, items expected within the defined scan envelope, and to generate a low-level query including a tuning parameter that selectively includes or excludes the determined items. The computer program product also includes instructions that, when ready by a machine, operate to cause data processing, apparatus to transmit the low-level query via the mobile reader, and to output an indicia of items that respond to the low-level query.

[0012] According to a further general implementation, a system includes a processor and an output module. The processor is configured to, define a scan envelope of a mobile reader, to determine, based on performing a high-level query at a resource planning module, items expected within the defined scan envelope, and to generate a low-level query including a tuning parameter that selectively includes: or excludes the determined items. The output-module is configured to transmit the low-level query via the mobile reader, and to output an indicia of items that respond to the low-level query. The system may also include a shopping cart upon which the processor and output module are mounted.

[0013] The details of one or more implementations are set forth in the accompanying drawings and the description below. Other features and advantages of the disclosure will be, apparent from the description and drawings, and from the claims.

BRIEF DESCRIPTION OF THE DRAWINGS

[0014] FIGS. **1** and **2** are contextual diagrams depicting the operation of an exemplary system FIGS. **3**, **5**, **8**S and **9** illustrate of exemplary systems.

[0015] FIGS. **4** and **7** illustrate exemplary processes.

[0016] FIG. **6** is a block diagram showing an exemplary automation protocol.

[0017] Like reference numbers represent corresponding parts throughout.

DETAILED DESCRIPTION

[0018] According to one general implementation, an RFID device is adjusted to selectively query those items known to be within range of the device, or to perform a more general query of objects within the range except for those known items. Such selective querying may be based on performing a high-level query at an enterprise resource system, for example to determine which items or products are expected at a given location.

[0019] In doing so, it is possible to reduce the number of irrelevant or incidental query responses, and to thereby increase computational effectiveness of an associated system. As this approach may reduce the amount of filtering that would: otherwise be required to process relevant query responses, selective querying may be useful in a variety of business contexts, including the retail context.

[0020] As such, RFID data of item-level tagged goods within a retail environment, such as a grocery store or discount store, may be registered and read. For planning and control of stores or retail business processes, the enhanced approach described herein may be: used to accurately identify numerous items at a given point in time. As such, RFID transponders may be integrated or attached to every item for electronic reading. By using mobile readers to selectively read specific RFID tags in predetermined locations (e.g., aisles in the store), tracking the location and quantities of inventory items may be significantly more, efficient and reliable than using high-density RFID readers. Such selective RFID reading may also be used to more efficiently solve other business and inventory-related issues, such as out-of-stock problems, shrinkage-based inventory changes, or plan-o-gram compliance.

[0021] In some implementations, selective RFID reading may be performed by attaching RFID readers to mobile devices such as shopping carts. In other implementations, robots such as cleaning robots, may also serve as carriers for the RFID readers. In yet other implementations, shop personnel, including stock clerks, inspectors, or other employees, may carry a bag or wear a belts holding the mobile reader. Regardless of the carrier system, the mobile reader may interrogate RFIDs of items based: on location as the mobile reader travels among the items, such as, between the aisles and shelves in a store.

[0022] For instance, as a shopping cart with an attached mobile RFID reader is entering a specific aisle (e.g., an aisle devoted to pet products), the mobile reader may scan specifically for items, related to pets (e.g., dog treats, cat litter, fish food, etc.) The ability to have the RFID reader scan for particular items in specific locations may be based on the reader's, location and direction of travel (e.g., using a geographical positioning system suitable for indoor use) and knowledge of product locations on the shelves (e.g., using information from an ERP system). Using, such information the system may speed up the reading rate of a large amount of tags within a small area of a shelf.

[0023] For example, when a mobile RFID reader in a store's pet aisle limits its reading to RFID tags of pet-related products, the RFID reader may be more efficient in obtaining information, such as to verify or adjust inventory quantities of pet products and supplies in a certain location. Moreover, data from a back-end ERP system may be exploited to further improve the reading rates, adjusting reading parameters using updated information, such as to query RFID tags for a smaller quantity of inventory items after many of the items have recently sold. Such improved registering of RFID transponder tags described herein may use the Electronic Product Code™ (EPC) Generation 2 (Gen2) standard or any other suitable RFID standard. Item-level queries, such as a query of an RFID tag, are referred to herein as low-level queries.

[0024] In addition to scanning a shelf for items that are expected to be on that shelf, the system may use location information to scan for items that are incorrectly placed (e.g., on the wrong shelf or in the wrong aisle). For example, while in the pet-related aisles of the store, the RFID reader may scan for items that are not pet-related. Such scanning may, for example, identify shampoo, milk or other products that are stored in the wrong location in the store (e.g., by a customer who decided not to buy an item and may have placed it on a wrong shelf). Scanning for such wrongly-placed items may help in identifying and moving those items to their correct shelves or locations where they may be purchased or where they may be protected from spoilage.

[0025] The use of mobile readers may extend regular RFID protocols by the incorporating the notion of location. For instance, instead of having fixed RFID readers (e.g. on SmartShelves), mobile-readers may continuously monitor retail shelves while the mobile readers are moved along the shelves. The use of mobile readers may combine location information

of where a particular reader stands (e.g., which department, aisle, shelf, etc. in the store) and in which direction it scans with regular RFID protocols in order to optimize tuning parameters of the RFID reader. The use of location information may be integrated with standard RFID reading equipment and RFID middleware solutions.

[0026] Mobile readers may be connected to a back-end ERP system via a wireless communication technology, such as a wireless local area network (WLAN). For instance, each of the mobile-readers may be tracked utilizing wireless communication to provide an accurate position determination. Examples of wireless communication and location technologies include: Active Bat, Cricket, an infrared cell-of-origin system, a radio beacon, or an active or passive RFID device.

[0027] A mobile reader may acquire its position and scanning direction by using a location system. Each area in the retail store, for example, may be associated with the expected kind(s) of items and the expected number of items. This location information may be stored on a back-end ERP-system. In some implementations, in order to avoid delays through the wireless communication to the ERP, the location information may also be stored on the mobile reader, which may receive real-time and/or periodic updates from the back-end, such as the quantity of sold items obtained from point-of-sale (POS). Such information may be used to derive tuning, parameters. For example, within an EPC Gen2 RFID protocol, the select parameters for tag populations and the frame length may be tuned: according to the location and, items in that location. Both parameters may affect the behavior of the RFID protocol, such as to make scanning more efficient.

[0028] Select command parameters may be tuned to interrogate a more targeted set of RFID tags. For example, instead of generically interrogating all possible IDs, a select command may use a mask to limit the ID range(s) to selected tag populations. Specifically, the ID range(s) resulting from the mask may correspond to only those items that, are within the reader's scanning range based location and heading of the mobile reader. As a result, only transponders matching the mask will answer the low-level query (e.g., using an EPC Gen2 Query command). This may decrease the collision probability of responses and significantly speed up the interrogation process.

[0029] Frame length parameters may also be tuned to provide more efficient reading of RFID tags. For instance, the frame length may determine the number of slots in which RFID transponders distribute their replies during a frame. As such, the frame length may correlate with the number of transponders potentially within the reader's radio frequency (RF) field. The mobile reader's firmware may include an arbitration algorithm to converge to the optimal frame length by adjusting tags reply probabilities within a range shown in Equation (1).

$$\text{Frame length range}=[0,2^{Q-1}] \quad (1)$$

[0030] Based on a mobile reader's location, the expected inventory quantities of items within the mobile reader's scan range (e.g., identified from the locally stored inventories list) may be used to set the Q parameter in Equation (1) in as few as one iteration. This may shorten the convergence time for the arbitration. In same implementations both the select mask parameter and the frame length optimization may be used in combination to achieve a larger speed-up than each single optimization approach.

[0031] While the mobile reader's location may be used to derive an ID selection mask for expected groups of items at a particular location, selection masks may also be used in other ways. For example, a selection mask may be inverted to query all but the items expected in that location, such as to query items in a pet related aisle that are not pet-related. In this way only the transponders for misplaced, items e.g., shampoo, milk, etc.) will answer. Querying for the misplaced items may be more efficient and reliable than using high-density RFID settings that read all transponders, which may potentially miss some due to unreliable communication. In this way, the use of inverted masks may identify misplaced items more successfully; increasing reading reliability.

[0032] Additionally, data from the back-end ERP system may be exploited to further improve the reading rates. For example, the back-end ERP system may store other information (e.g., inventory quantities) on sold products acquired from the point-of-sale (POS) using an RFID-capable check-out system. In collaboration, both the back-end ERP system and the RFID reader may exchange their current inventory information. As a result, both the back-end ERP system and the mobile RFID reader may achieve a more up-to-date and accurate inventory list than each single system alone. This effect of amplification based on each other's information may be referred to as "collaborative resonance."

[0033] Referring to the figures FIGS. **1**A-D are block diagrams showing an exemplary system **100** for querying and receiving location information for expected items using a mobile reader **102** on a shopping cart **104**. The implementation depicted in the system **100** may be used, for example, to provide the mobile RFID reading scenarios described above. In other implementations, the mobile reader **102** may be transported in other ways, such as carried by an employee, carried by a robot, or installed on forklifts or other warehouse equipment.

[0034] Referring to FIG. **1**A, the system, **100** may use one or more mobile readers **102** attached to one or more shopping carts **104**. The mobile reader **102** may include an RFID scanner (described in more detail below in reference to FIG. **3**) or some other scanner operable to send and receive signals to tags or transponders, such as RFID tags. For example, a separate RFID tag may be attached (or incorporated within) each of multiple products or items **106***a-d* stored on a shelf "X" **108**.

[0035] The mobile reader **102** may be configured to begin reading RFID tags, for example, when the shopping cart **104** enters a zone **110** or leaves another, undepicted zone. The determination that the shopping cart **104** has entered the zone **110** may be made using location technologies (e.g., Active Bat, Cricket etc.). The mobile reader **102** may begin scanning items within a scan envelope **112** defined in part, for example, by scan directions **114***a* and **114***b*. Specifically, the scan direction **114***a* may be generally perpendicular to the direction of movement of the cart **104**, such as toward the shelf "X" **108**, or it may take on another orientation. Generally speaking, a "scan envelope" refers to the whole two or three-dimensional space in which a reader can communicate with a tag or other identification device attached to a product.

[0036] The scan direction **114***b* may be generally parallel to the direction of movement of the cart **104**, such as down a store aisle that may be represented by, or adjacent to, the zone **110**. Because the typical mobile reader **102** may be operable to scan in multiple dimensions, a vertical dimension (not shown) and the range of the mobile reader **102** may define a

three-dimensional space, such as that consistent with the vertical or top view represented by the scan envelope **112**. Such a space may include items on store shelves, such as the items **106***a-d* on the shelf "X" **108**. In some implementations, the scan envelope **112** may extend to both sides of the cart **104**, such as to scan items on both the left side and the right side of a store aisle.

[0037] FIG. **1**B is a block-diagram of exemplary object location data **120**. Generally, the object location data **120** may identify the locations of items, such as products on the shelves within a store. Such information may be generated, at least in part, by the mobile reader **102** scanning items (e.g., items **106***a-d*) on shelves (e.g. the shelf "X" **108**). In some implementations, the object location data **120** may be stored remotely from the mobile reader **102**, such as in a back-end ERP system located within the store. As such, the mobile reader **102** may receive initial and updated object location data **120** from the ERP system using, wireless communication or wired downloads (e.g., via temporary connections to USB, cable, etc.) In other implementations, the object location data **120** may be stored within the mobile reader **102**.

[0038] The object location data **120** may include multiple entries **122** (represented here in tabular form) that include location information for items, such as products on store shelves. For instance, an entry **122** may include fields or values such as an item identifier **124** (e.g., A, B or D), a location **126** (e.g., "Shelf X"), and a timestamp **128**. Such information may define, for example, the last known location of a particular item at a given time, such as the last time that the RFID tag for a, particular item was read by the mobile reader **102**. For instance, the entry **122***a* for item A may indicate that item A **106***a* is stored on "Shelf X," and the timestamp **128** may indicate that the most recent scan of item A occurred at "09:29" on "2008-02-29" (i.e., 9:29 AM on Feb. 29, 2008). Notably, in an initial state, the object location data **120** does not include an entry for item C **106***c*.

[0039] In some implementations, other fields or data elements may exist for an entry **122**, such as the inventory quantity of an item, its price, its good-through or expiration date, etc. In some implementations, multiple entries **122** may exist for the same item **124**, such as candy bars that may be located at checkout shelves in addition to the candy aisle. Multiple entries for the same item may be represented, for example, as additional rows in the table of entries **122**. Such entries **122** for the same item may differ in the location **126**, the timestamp **128**, and/or other fields not shown (e.g., inventory quantities, expiration dates, etc.).

[0040] FIG. **1**C is a block diagram showing an exemplary low-level query **140** transmitted by the mobile reader **102** and multiple responses **142***a-c* transmitted by some of the items **106***a-d* in response to the low-level query. For example, the low-level query **140** may be "Query(A+B+D)" which the reader **102** may transmit to read the RFID tags for items A **106***a*, B **106***b* and D **106***d*. The reader **102'** may transmit the low-level query **140**, for instance, at the time that the cart **104** enters the zone **110**. Moreover, the specific items **106** (e.g., items A **106***a*, B **106***b* and D **106***d*) that are queried may be based on entries **122** in the object location data **120**. For example, the mobile reader **102** may scan for items A **106***a*, B **106***b* and D **106***d* if those items are pet-related and are identified in the object location data **120** as being stored on the shelf "X" **108** (e.g., a shelf in the "Pet" department of a store). In this case, the item C **106***c* may not be pet-related, and therefore not included in the low-level query **140** "Query(A+B+D)". Asia result of receiving the low-level query **140**, each of the responsive items may return their corresponding individual responses **142***a-c*, which may be received by the mobile reader **102**.

[0041] FIG. **1**D is a block diagram of the exemplary object location data **120** with fields and values updated based on scanning items A **106***a*, B **106***b* and D **106***d*. For instance, as a result of receiving the responses **142***a-c*, the timestamp **128** for each of the items scanned may be updated with more up-to-date scan times. For example, the timestamp "2008-02-29-09:29" for entry **122***b* may be updated with the later scan time "2008-03-01-17:19" (e.g., representing a scan of the item A **106***a* at 5:19 PM on Mar. 1, 2008). Notably, since item C **106***c* was not expected on the shelf X **108** and was not called in the low-level query **140**, the item C **106***c* did not generate a response, and the object location data **120** was not update to reflect the existence of item C **106***c* on the shelf X **108**.

[0042] Other fields in the object location data **120**, such as inventory quantities, may also be updated at the same time. If the mobile reader **102** is in wireless or other such communication with the back-end ERP system, the updated object location data **120** may be transmitted to the ERP system in real-time. In some implementations, updated information may be sent to the ERP system in packets such as at scheduled intervals (e.g.; every-five minutes). The object location data **120** may be output visually to a user via a display., or may be stored for later use.

[0043] FIGS. **2**A-D are block diagrams showing an exemplary system **20** for querying and receiving-location information for unexpected (e.g., misplaced) items using a mobile reader **202** on a shopping cart **204**. The system **200** may be similar to the system **100** for scanning expected items, and the mobile reader **202** may be similar to the mobile reader **102**. In some implementations, the mobile reader **202** may be a dedicated reader used to locate and identify unexpected items, such as items on the wrong shelf in a grocery store, misplaced items in a warehouse, hospital patients or visitors in the wrong ward of a hospital, etc. In some of these examples, the RFID chips may be somewhat mobile (e.g., in addition to mobile readers **202**), using inverted ID selection masking to identify out-of-place items (or people).

[0044] Referring to FIG. **2**A, the system **200** may use one or more mobile readers **202** attached to one or more shopping carts **204**. The mobile reader **202** may include an RFID scanner (described in more detail below in reference to FIG. **3**) or some other scanner operable to send and receive signals to tags or transponders, such as RFID tags. For example, a separate RFID tag may be attached (or incorporated within) each of multiple products or items **206***a-d* stored on a shelf "X" **208**. Included with the items **206***a-d* may be the item **206***c* which may be misplaced on the shelf "X" **208**, such as shampoo or milk on a shelf meant to display only pet-related products.

[0045] The mobile reader **202** may be configured to begin reading RFID tags of misplaced items, for example, when the shopping cart **204** enters a zone **210**. The determination that the shopping cart **204** has entered the zone **210** may be made using location technologies (e.g., Active. Bat, Cricket, etc.). At that time, the mobile reader **202** may begin scanning items within a scan-envelope **212** defined in part, for example, by scan directions **214***a* and **214***b*. The scan envelope **212** may, for example, operate in a similar way as the scan envelope **212**. In some implementations, the scan envelope **212** may

extend to both sides of the cart **204**, such as to scan misplaced or other items on both the left side and the right side of a store aisle.

[0046] FIG. **2**B is a block diagram of exemplary object location data **220**. The object location data **220** may be similar to the object location data **120**, identifying the locations of items, such as products on the shelves within a store. Such information may be generated, at least in part, by the mobile reader **202** scanning items (e.g., items **206***a-d*) on shelves (e.g., the shelf "X" **208**). The object location data **220** may also be similar to the object location data **120** in how the information may be stored, shared, used, etc with a back-end ERP system with which the mobile reader **202** may communicate.

[0047] The object location data **220** may include multiple entries **222** (e.g., similar to entries **122** and used in a similar way) that include location information for the items **206***a-d*. The information may include, for example, an item identifier **224** (e.g., A, B, D, etc.), a location **226** (e.g., "Shelf X"), and a timestamp **228**. Other fields or values in the entries **222** may identify whether a product or item is out of place.

[0048] FIG. **2**C is a block diagram showing an exemplary low-level query **240** transmitted by the mobile reader **202** and a response **242** transmitted by the item C **206***c* in response to the low-level query **240**. For example, the low-level query **240** may be "Query(NOT(A+B+D))" which the reader **202** may transmit to read the RFID tags for any items that are not items A **206***a*, B **206***b* or D **206***d*. The reader **202** may transmit the low-level query **240**, for instance, at the time that the cart **204** enters the zone **210**. Moreover, the specific items **206** (e.g., items A **206***a*, B **206***b* and D **206***d*) that are identified in the low-level query may be based on, entries **222** in the object location data **220** that identify the particular items **224** expected to exist oh the shelf a "X" **208**. The mobile reader **202** may be scanning for items other than items A **206***a*, B **206***b* and D **206***d*, for example, in order to locate any items that are on the wrong shelf. For example, items A **206***a* (e.g., dog treats), B **206***b* (cat litter) and C **206***c* (e.g., fish food) may be items that are expected to be on the shelf, "X" **208**. As such, the low-level query **240** "Query(NOT(A+B+D))" may be formulated automatically by the mobile reader **202** to scan only for items that are not pet-related. As a result of receiving the low-level query **240**, any responsive item (e.g., the item C **206***c*) may return its response (e.g., the response **242**) to the mobile reader **202**.

[0049] FIG. **2**D is a block diagram of the exemplary object-location data **220** with fields and values, updated based on scanning the item C **206***c* and determining that the item C **206***c* is "unexpected" (e.g., located on the wrong shelf). For instance, as a result of receiving the response **242**, the entry **222***c* for the item C may be updated with the current location **2268** (e.g., "Shelf X") and a more up-to-date scan timestamp **228** (e.g., "2008-03-01-17:19"). In some cases, the update to the object location data **220** may be in the form of a row that is inserted into the table of entries **222** if, for example one or more row entries **222** exist for inventory quantities of the item C **206***c* that are stored in the correct location(s). In some implementations, the inventory quantities of such correctly-located items may be adjusted or annotated in some way to reflect the inventory quantities that have just been discovered to be stored in the wrong place.

[0050] Other fields in the entry **222***c*, such as an indicator that an item is out-of-place, may also be updated at the same time. If the mobile reader **202** is in wireless communication or other such communication with the back-end ERP system, the updated object location data **220** may be transmitted to the ERP system in real-time. In some implementations, updated information may be sent to the ERP system in packets, such as at scheduled intervals (e.g., every five minutes). The object location data, **220** may be output visually to a user via a display, or may be stored for later use.

[0051] FIG. **3** is a block diagram showing exemplary-components of a system **300** for improved registering of RFID transponder tags. As depicted, the system **300** includes a mobile reader **302** that may communicate with a back-end Enterprise Resource Planning (ERP) device **304**. The communication may occur, for example, across any suitable wireless network **306** (e.g., using Active Bat, Cricket, etc.) using multiple antennas **305***a* (one included within each of one or more mobile readers **302**) and an antenna **305***b* included within the ERP device **304**.

[0052] The mobile reader **3102** may be similar to the mobile readers **102** and **202** described above. As such, the mobile reader **302** may be portable and operable to read RFID tags of geographically dispersed items, such as products on the shelves in a store. For example, multiple mobile readers **302** may be mounted on one or more shopping carts in order to scan the RFID tags of items located on shelves throughout the store. The scanning may occur, for example, as customers push the carts through the store aisles while shopping. As described above the mobile reader **302** may use location information available from the ERP device **304** in order to limit scanning of RFID tags to those within the immediate area of the mobile reader **302**. For example, the mobile reader **302** may scan for pet-related items only while the shopping cart (to which the mobile reader **302** is attached) is in the pet section of the store. Similarly, to search for wrong-shelved items, the mobile reader **302** may alternatively scan for non-pet-related items (e.g., shampoo, milk, etc.) while in the pet-related aisles, or other misplaced items in other aisles (e.g., dog treats in the shampoo aisle), and so on.

[0053] Additional or the same mobile readers **302** may be used to scan items stored in a store's stock room, or to scan items immediately as they are unloaded from delivery trucks, to name a few examples. In the case that a particular truck is delivering items related to pet products, the mobile reader **302** may scan specifically for only those pet-related items that are likely to be unloaded from the truck.

[0054] The ERP device **304** may be part of an overall ERP system, some or all of which: may be located in a store, or warehouse in communication (e.g., wireless or wireline communication) with one or more mobile readers, **302**. The communication may use any suitable location: technology, such as Active Bat, Cricket, an infrared cell-of-origin system, a radio beacon, or an active or passive RFID device. The ERP device includes a resource planning module **315** that is capable of performing high-level queries, such as a high-level query that outputs an indication of items expected at a given location. The high-level query may be formulated at the mobile reader **302** or the ERP device **304** in response to a request generated at the mobile reader **302** or the ERP device **304**. The response the high-level query may be provided to the mobile reader **302** or the ERP device **304** for further processing.

[0055] The mobile reader **302** may include an, RFID scanner **308**, a storage medium **310**, a processor **312**, and an input/output module **314**. The RFID scanner **308** may be any scanner that is operable to send and receive signals to tags or

transponders, such as RFID tags. The RFID scanner **308** may further be range adjustable to increase or decrease its scanning envelope, capable of scanning in programmable directions (e.g., to the left or right or both), and capable of having its parameters tuned. For example, parameters that may be tuned include select parameters for tag populations (e.g., using masks to select specific RFID tag IDs as described above), frame length (e.g., the time duration in which to scan), or any other parameters that may be tuned within various protocols, such as within an EPC Gen 2 RFID protocol.

[0056] The storage medium **310** may contain similar information that is included in the object location data **120** and **220**. For example the storage medium **310** may include location information for each item that may be scanned by the mobile reader **302**. The information for any particular item may include, for example, the item ID, its location (e.g., shelf, bin, rack, aisle, cabinet or other location identifier), a timestamp indicating the last time the item was scanned, an inventory quantity, and any other fields that may be useful in tracking items and their locations. Information stored in the storage medium **310** may be updated in several ways, including as a result of the RFID scanner **308** scanning items or as updated information is received from the ERP device **304**. Further, updated information in the storage medium **310** may be transmitted to the ERP device **304** in real-time (e.g., as it is updated by the RFID scanner **308**) or at scheduled intervals (e.g., every five minutes, twice a day, once a week, etc.). The mobile reader **302** may use information stored, in the storage medium **310**, for example, to scan specific items on the shelves based on the location of the mobile reader **302** and the expected locations of items (e.g., on shelves within the store).

[0057] The processor **312** may determine, using the mobile reader's current location and location information in the storage medium **310**, which items to scan on the shelves. If the mobile reader **302** is currently checking inventory, for example, the processor **312** may generate a selection mask for the specific items in proximity to the mobile reader **302**. Such a selection mask may be used, for example to produce a low-level query such as the low-level query **140** "Query(A+B+D)" described in reference to FIG. **1**C. If the mobile reader **302** is currently checking for misplaced items (e.g., items on the wrong shelf), the processor **312** may generate an inverted selection mask based on the IDs of the specific items expected to be in proximity to the mobile reader **302**. Such a selection mask may bemused, for example, to produce a low-level query such as the query **140** "Query(A+B+D) described in reference to FIG. **1**C.

[0058] The input/output module **314** may provide the input and output of location data used by the mobile reader **302**. For example, the input/output-module **314** serve as an interface for sharing location information between the storage medium **310** and the ERP device **304**.

[0059] FIG. **4** is a flow chart of an exemplary process **400** for reading RFID transponder tags using a mobile reader. For example, referring to FIGS. **1**A-D, the process **400** may be used by one or more mobile readers **102** within the system **100** to scan items that are expected to be on specific store shelves. Specifically, referring to FIG. **11**C, the items expected to be stored on the shelf "X" **108** may include items A **106***a*, B **106***b* and D **106***d*. Referring to FIGS. **2**A-D, the process **400** may also be used by one or more mobile readers **202** within the system **200** to scan items that are in an unexpected location (e.g., items misplaced on the wrong shelf). Specifically, referring to FIG. **2**C, the items not expected to be stored on the shelf "X" **208** may include item C **206***c*. The process **400** may also be used in association with the mobile reader **302** within the system **300**, as described in reference to FIG. **3**.

[0060] Briefly, the computer implemented process **400** includes, inter alia, defining a scan envelope of a mobile reader, determining, based on performing a high-level query at a resource planning module, the items expected within the scan envelope, generating, a low-level query that includes or excludes the expected items, transmitting the low-level query, and outputting indicia responsive to the low-level, query.

[0061] In more detail, when process **400** begins (S**402**) a scanning system is capable of performing a scan. For example, referring to FIGS. **1**A-D, the scanning system may be the system **100** that includes one or more mobile readers **102** operable to read RFID tags of items that are expected to be on particular-shelves such as the items **106***a*, **106***b* and **106***d* on the shelf "X" **108**. In another example, referring to FIGS. **2**A-D, the scanning system may be the system **200** that includes one or more mobile readers **202** operable to read RFID tags of items (e.g., the item C **106***c*) that are not expected to be on particular shelves.

[0062] Returning to FIG. **4**, a scan envelope of a mobile reader is defined (S**404**). For example, referring to FIG. **1**A, the system **100** may define a scan envelope **112**. The scan envelope **112** may correspond to the three-dimensional space in which the mobile reader **102** is capable of reading RFID tags, such as RFID tags on the items **106***a-d* stored on the shelf "X" **108**. The scan envelope **112** may further be based on the location and travel direction of the cart **104**, as well as the range of the RFID scanner included in the mobile reader **102**.

[0063] Based on performing a high-level query at a resource planning module, expected items within the defined scan envelope are determined (S**406**). A "high-level" query refers, to a query formatted or written using a high-level query language (HLQL), such as the Structured Query Language (SQL), and is contrasted with a "low-level" query, for instance a low-level RFID communication command. In this regard, the enhanced item tracking approach described herein may involve both a high-level and a low-level query.

[0064] The purpose of the high-level query is to identify or determine a quantity or other indicia of items expected at a particular location, while the low-level query uses the results from the high-level query to further query the expected or unexpected items, such as via an over-the-air protocol.

[0065] For example, referring to FIG. **1**A, the system **100** may use: the ID of shelf "X" **108** to look up items' in the object location data **120** that are expected to reside within the scan envelope **112**, using a high-level query. Specifically, the expected items may correspond to any entries **122** having "Shelf X" as the value for the location **126**. For example, such identified entries **122** may include items A, B and D (e.g., as listed in the item **124**), the IDs of which correspond to items A **104***a*, B **104***b* and D **104***d* on the shelf "X" **108**. In some cases, the scan envelope **112** may encompass multiple shelves, bins, racks or other storage locations. In that case, the expected items determined for the scan envelope **112** would include all items defined in the object location data **120** for those storage locations (e.g., shelves; bins, racks, etc.), such as those items located on particular side of the mobile reader.

[0066] The object location data **120** is accessed using, or stored at a resource planning module. Specifically, the ERP system or device includes, as a component, the resource planning module (or "RFID Query Planning" module) which

includes a 'system model,' or a list of the products or items and their corresponding locations. The resource planning model performs high level query planning, such as to inform the mobile reader which products to expect in relation to the location or scanning envelope of the mobile reader.

[0067] The process of informing the mobile reader of the expected items at a particular location may be performed using one or more of several techniques. In a polling example; the mobile reader determines and communicates its location to the ERP device, which determines which products, are expected at the given location (collectively, "the select parameters"). In a farther polling example, the mobile reader requests an indication the expected items for multiple locations (such as all locations) from the ERP device, so that reading can be performed by comparing the scanning envelope to the stored multiple locations, without maintaining a connection between the ERP device and the mobile reader. In this case, the mobile reader iteratively or repeatedly requests updates, of the indication, so that the reader has a current list of expected items.

[0068] In a pushing example, the ERP device requests that the mobile reader provide an indication of the reader's location (or scanning envelope), performs a query based on this information, and sends the select parameters back to the mobile reader. In an alternative-pushing example, the ERP device sends a list with the select parameters for more than one or all locations to the mobile reader, and iteratively or repeatedly sends updates or changes to the mobile reader as they are, generated. In all of the above cases, communication between the ERP device and the mobile reader may occur using various interfaces, such as web services, remote procedure calls (RPCs), Business Application Programming Interface (BAPI) calls, HTTP, or other techniques.

[0069] The resource planning model incorporates information from ERP devices to increase the reading rate and/or reading probability on a radio protocol level. Examples of queries from this component include: selective querying of specific IDs that are inventoried according to the current system model at a given location, thereby reducing collisions; selective querying of a group of tags that are expected in a location according to the system model; also reducing collusions; selective querying of a groups of tags that are not allowed in a location based on inventory constraints for the location, further reducing collisions; and selection of tags based on facts (e.g. "best before" date<next manual inspection at the shelf location) to predict future violation of inventory constraints based on inventory information.

[0070] Based on the results of the high-level query, a low-level query is generated that includes a tuning parameter that selectively includes or excludes the determined items (S**408**). For example, tuning parameters may include select parameters for tag populations (e.g., using masks to select specific RFID-tag IDs as described above), frame length (e.g., the time duration in which to scan), or any other parameters. In particular, masks may be used to generate a low-level-query that includes those items expected to be on a specific shelf, or a low-level query that excludes those items (e.g., to find misplaced items). Referring to FIG. **1**C, an exemplary inclusive low-level query may be the low-level query **140**, or "Query(A+B+D)," which the mobile reader **102** may transmit to read the RFID tags for items A **106***a*, B **106***b* and D **106***d*. Referring to FIG. **2**C, an exemplary exclusive low-level query may be the low-level query **240**, or "Query(NOT(A+B+D))," which the mobile reader **202** may transmit to read the RFID tags for any items that are not items A **206***a*, B **206***b* or D **206***d*.

[0071] The low-level query is transmitted via the mobile reader (S**410**). For example, referring to FIG. **1**C, the mobile reader **102** may transmit the low-level query **140**, generally within the scan envelope **12** and in the relative direction of the items **106***a-d*. In another example, referring to FIG. **2**C, the mobile reader **202** may transmit the low-level query **240**, generally within the scan envelope **212** and in the relative direction of the items **206***a-d*. Specifically, the queries-**140** and **240** may be transmitted by the RFID scanner **308** (FIG. **3**).

[0072] The mobile reader uses the results of the high-level query, performed at the resource planning module to generate low-level queries to communicate to tags (i.e. RFID tags) in an enhanced manner. In a further implementation, the resource planning module itself generates the low-level-queries for execution by the mobile reader.

[0073] An indicia of items that respond to the low-level query is output (S**412**). For example, referring to FIG. **1**C, based on the receipt of the response(A) **142***a*, the response(B) **142***b*, and the response(D) **142***c*, the mobile reader **102** may update corresponding entries **122** in the object location data **120**. In particular, the timestamps **128** for responding items A, B and D may be updated to indicate the date and time that the items' RFID tags were scanned by the mobile reader **102**. In some implementations, other fields in the object location data **120** may be updated, such as inventory quantities. For example, if the item A **106***a* corresponds to XYZDogFood Company dog treats and multiple (e.g., fifty) responses(A) **142***a* are received, then the inventory quantity field in the object location data **120** may be updated to reflect the scanned inventory quantity (e.g., fifty) of boxes of XYZDogFoodCo dog treats.

[0074] In another example, referring to FIG. **2**C, based on the receipt of the response(C) **242**, the mobile reader **202** may update corresponding entries **222** in the object location data **220**. In particular, the location **226** for responding item C may be updated to indicate the location of C's RFID tag that was scanned by the mobile reader **202**. Additionally, the timestamp **228** for responding item C may be updated to indicate the date and time that the item C's RFID tag was scanned by the mobile reader **202**. In some implementations, other fields in the object location data **220**, may be, updated, such as inventory quantities. Output may include audio or video output or any other output that stimulates a user's senses or output may occur by storing the indicia on a storage medium for later use.

[0075] In some implementations updates to the object location data **120** or the object location data **220** may be communicated in real-time to an ERP system, such as the ERP-device **304** shown in FIG. **3**. In other implementations, the updates may be held until later, such as to transmit the updates on a scheduled basis (e.g., every five minutes, each hour, twice daily, etc.) or when a pre-determined number of updates have accumulated. The process **400** ends (S**414**) when the indicia of items that respond to the low-level query have been output.

[0076] FIG. **5** is a block diagram showing an exemplary system **500** for optimizing queries for specific items using inventory data. In general FIG. **5** depicts the entities of the system **500** in a systematic way, using holding to indicate some of the key entities that may contribute to more efficient registering and reading RFID data. In general, the system may

include low-level query optimization for RFID using an over-the-air provisioning (OTAP) protocol (e.g., EPC Gen2 OTAP) by an ERP system on the basis of providing location information to the mobile reader, the current system model (e.g., inventory information based on past reads/business logic), and predictions and constraints that are based on the application (e.g., plan-o-gram compliance, physical model for mobile reader, etc.). Specifically, the system **500** may use a novel method for query planning for RFID-readers that incorporates information from ERP systems to increase the reading rate and/or reading probability on a radio protocol level.

[0077] Briefly, the system **500** includes a mobile-reader **502**, an ERP-system **504**, and a store **506**. The mobile reader **502** may be operable to scan multiple RFID tags **508** that are attached to (or embedded within) items in the store **506**. For example, the mobile reader **502** may be similar in operation to the mobile readers **102**, **202** and **302** described above. In some implementations, the RFID tags **508** may instead be RFID tags in other places, such as in a warehouse, etc.

[0078] The mobile reader **502** includes an RFID reader **510** and a location subsystem **512**. The RFID reader (or "scanner") **510** may be similar to the RFID scanner **308** described in reference to FIG. **3**. The RFID scanner **510** may receive select parameters **514** from the ERP system **504**, such as select parameters that allow the mobile reader **502** to query only a specific population of RFID tags **508** in the store **506**. Further, other select parameters **514** may identify frame lengths to be used when querying RFID tags **508**, where, for example, the frame lengths may depend on the inventory quantities of the items associated with the RFID tags **508**. In some implementations, the frame length may also depend on other features, such as the physical size of the items, expected arrangement on the shelves, etc. The location subsystem **512** may be similar to the object location data **120** described in reference to FIG. **1**B or the object location data **220** described in reference to FIG. **2**B.

[0079] The ERP system **504** includes an RFID query planning module **518**, a physical model **520**, an item inventory **522'**, multiple inventory constraints **524**, an inventory update module **526**, and a business logic checking module **528**. The ERP system **504** may be similar in function to the ERP device **304** described in reference to FIG. **3**. In some implementations, other components of the ERP system **504** ray exist.

[0080] The RFID planning module **518** may generate the select parameters **514** that may be provided to the RFID reader **510**. Such parameters may use, RFID reader model information from the physical model **520**, location IDs from the item inventory **522**, and inventory information from the item inventory **522**. The physical model **520** may include information describing a physical model (e.g., scan ranges, etc.) of the RFID reader **510'**. If different, RFID readers **510** are in use, then the physical model **520** may define physical models of each of the different RFID reader types.

[0081] The item inventory **522** may include a complete inventory of items within the store **506** as well as their corresponding RFID tags **508**. The inventory constraints **524** may include, for example, plan-o-gram compliance information, such as information that describes how multiple stores (e.g., in the same chain) may be organized so that customers may experience the same look and feel. The system **500** may use the inventory constraints **524**, for example, to identify items, that are misplaced or not plan-o-gram compliant in some way.

[0082] The inventory update module **526** may receive query location or success information from the RFID reader **510**. The information may be based on responses received by the RFID reader **510** after querying the RFID tags **508**. For example, the information may include verification of (or updates to) the locations of items within the store **506**. Such information may be used to update the item inventory **522**. The business logic checking module **528** may be used, for example, to combine business logic (e.g., using plan-o-gram compliance information from the inventory, constraints **524**) with inventory item information in order to generate selection parameters **514**.

[0083] Where other systems may generally need to read all tags in the range of an RFID reader in order to solve inventory problems, the system **500** may provide optimizations by: a) selective querying of specific IDs that are inventoried according to the current system model at a given location; b) selective querying of a group of tags that one expects in a location according to the system model, c) selective querying of a groups of tags that are not allowed in a location based-on inventory constraints for the location; and d) selection of tags based on facts (e.g., the "best before" date of the items versus the next scheduled manual inspection at the shelf location) to predict future violation of inventory constraints based on inventory information. Any and all such optimizations may lead to major RFID reading efficiencies (e.g., speed-up, accuracy, etc.) from using those techniques.

[0084] In cases a) and b), the ERP system may determine which product groups or even which items should be located in the store. This location information may be used to optimize the reading of RFID tags of items expected in specific locations, as, described above in reference to FIGS. **1**A-D. In cases, c) and d), the reader may detect misplaced products, as described with reference to FIGS. **2**A-D.

[0085] In cases c) and d) of the queries described above, it may be only necessary to prove or disprove the existence of a product at a defined location. As such, a protocol optimization in accordance to the tag state machine specification may skip the tag acknowledgement and reading phase of the protocol, effectively aborting the protocol. By skipping those phases, the mobile reader may still signal the success of query as proof of existence (e.g., misplaced items) at, a faster rate.

[0086] FIG. **6** is a block diagram showing an exemplary automation protocol **6600** that may be aborted to bypass unnecessary reading of specific RFID IDs of tagged items. Generally, the entire protocol **600** may be used within the systems **100** or **200**, for example, to read RFID tags of items expected (and unexpected) to be in particular locations. The protocol **600** may be aborted e.g., bypassing sequence **602**) when, for example, only the inventory quantity of items is required but the specific IDs of the tagged items are unnecessary. In that case, a particular RFID transponder may reply with a random number when initializing the arbitration, but not send back its EPC identification. As a result, the EPC-Gen2 radio protocol may be more efficient (e.g., speeding up more than 50%) because reading times for the 96-bit IDs may be saved.

[0087] Briefly, the protocol **600** includes a process for an interrogator **604** and a process for an RFID tag **606**. The interrogator **604** processes may include process select **608**, query **610**, acknowledgement **612**, query reply **614**, and NAK **616**. The RFID tag **606** processes may include process RN**16**

618 and "PC+EPC+CRC16" 620. When the protocol 600 is aborted, for example, the bypassed processes 602 may include processes 620, 614 and 616. As a result of aborting the protocol 600, a portion of the protocol execution times, such as times 622, may be saved.

[0088] If the reading of IDs is skipped groups of items and misplaced items may not be separated anymore. However, the reader's location may be used to identify to the group of items. As a result, the found number (e.g., inventory-quantity) of items may be correctly associated to the items within the item location data. Despite the limitation regarding misplaced items; there are enough situations where the protocol abort approach may be applicable.

[0089] FIG. 7 is a swim-lane diagram of exemplary queries 700 on specific items, illustrating how both the high-level and low-level queries interact. The queries 700 may occur, for example, between an RFID reader 702, a back-end. ERP server 704, and multiple RFID tags 706-712. The RFID reader 702 may be similar, for example, to the mobile RFID readers 102 and 202 described above.

[0090] In a sequence 714, the RFID reader 702 may define its position (e.g., a specific aisle in a store, warehouse, etc.) by using any suitable wireless communication or location technologies such as Active Bat, Cricket, an infrared cell-of-origin system, a radio beacon, or an active or passive Radio Frequency IDentification (RFID) device.

[0091] Once its location is established, a sequence 716 may include queries and responses for the RFID reader 702 to determine IDs of items to query in that location. For example, the items may be on shelves in close proximity to the RFID reader 702, as determined using item location information. The back-end ERP server 704 may provide the item location information if the information is not already stored locally on the mobile RFID reader 702. As a result, the IDs of items to query in that location may correspond, for instance, to items A 106*a*, B 106*b* and D 106*d* described in reference to FIG. 1C.

[0092] Sequences 714 and 716 generally define the formulation, processing, and response for the high-level query. Specifically, the mobile reader provides its determined location, and polls the resource planning module-on the back-end server for the select parameters, which provides such data to the mobile reader based on information stored in its system module.

[0093] In sequences 718, 720 and 722 the RFID reader 702 may query the RFID tags 706-710 of the items in that location and receive corresponding responses. In some implementations, the query portions of the sequences 718', 720 and 722 may be combined into a single low-level query, such as the combined query 140 (e.g., "Query(A+B+D)") described in reference to FIG. 1A. As a result, individual responses (e.g., responses 142*a-c*) may complete the sequences 718, 720 and 722. An additional sequence (not shown) may be used to query items such as the misplaced item corresponding to the misplaced RFID tag 712, as described in reference to FIG. 2C.

[0094] Sequences 718, 720, and 722 generally define the formulation, processing, and response for the low-level query. Specifically, the mobile reader generates the low-level queries to communicate with tags or other identifiers. Using an example EPC-standard, an example query formulated as shown below in Table 1:

TABLE 1

Example Low-Level Query									
	Command [4] Select	Target[3] = SL	Action[3] = Assert SL	MemBank[2] = EPC	Pointer [EBV] = Company Prefix	Length[B] = Company Prefix + Item Reference	Mask[Variable] = Masked Company and Product (example)	Truncate[1] = Disable truncation	CRC16[6]
opcode	1010	100	000	01	00001110	00101100	000100000000000000 000001100101000000	0	
	Query	DR[1]	M[2]	TRExt[ ]	Sel[2]	Session[2]	Target[2]	Q[4]	CRC5[5]
	1000	0	00	0	11	00	0	0101	

[0095] For a 99% reading-accuracy, the Table 1 query would take one second for a given quantity of products at a set range. Without using the enhanced: approach described herein, the query would be formulated as shown below in Table 2:

TABLE 2

Example Low-Level Query									
	Command [4] Select	Target[3] =	Action[3] =	MemBank[2] =	Pointer[EBV] =	Length[B] =	Mask[Variable] =	Truncate[1] =	CRC16[16]
opcode	1010	000	010	01	00000000	00000000	0	0	
	Query	DR[1]	M[2]	TRExt[ ]	Sel[2]	Session[2]	Target[2]	Q[4]	CRC5[5]
	1000	0	00	0	00	00	0	0111	

[0096] For a 99% reading accuracy, the Table 2 query would take 8 seconds for the given quantity of products at the same set range. As such, and to its advantage, the enhanced approach described herein reduces the probability of collisions and associated bandwidth usages, allowing for more frequent item tracking events, increasing inventory accuracy and reducing unnecessary restocking.

[0097] FIG. **8** is a block diagram of an exemplary architecture for a system **800** using a mobile RFID reader to selectively read items based on location information obtained from an ERP system. For example, the system **800** may be similar to other systems (e.g., the systems **100**, **200**, etc.) described above. The system **800** includes an RFID reader **802**, items **0804** on a retail shelf **806**, and an ERP-system **806**. The RFID reader **802** may be mounted, for example, on a shopping cart **810** or other such mobile device. The RFID reader **802** may use a location system **812** to determine its location, using any suitable wireless communication or location technologies (e.g., Active Bat, Cricket, etc.). Once its location is established, the RFID reader **802** may use item location information (e.g., stored locally or available from the ERP system **806**) to selectively read **814** the RFID tags of the items **804**.

[0098] FIG. **9** is a block diagram of computing devices **900**, **950** that may be used to implement the systems and methods described in this document, as either a client or as a server or plurality-of-servers. Computing device-**900** is intended to represent various forms of digital computers, such as laptops, desktops, workstations, personal digital assistants, servers, blade servers, mainframes, and other appropriate computers. Computing device **950** is intended to represent various forms of mobile devices, such as personal digital assistants, cellular telephones, smartphones, and other similar computing devices. The components shown here, their connections and relationships, and their functions, are meant to be exemplary only, and are not meant to limit implementations of the inventions described and/or claimed in this document.

[0099] Computing-device **900** includes a processor **902**, memory **904**, a storage device **906**, a high-speed interface **908** connecting to memory **904** and high-speed expansion ports **910**, and a low speed interface **912** connecting to low speed bus **914** and storage device **906**. Each of the components **902**, **904**, **906**, **908**, **910**, and **912**, are interconnected using various busses, and may be mounted on a common motherboard or in other manners as appropriate. The processor **902** may process instructions for execution within the computing device **900**, including instructions-stored in the memory **904** or on the storage device **906** to display-graphical information for a GUI on an external input/output device, such as display **916** coupled to high speed interface **908**. In other implementations, multiple processors and/or multiple buses may be used, as appropriate, along with multiple memories and types of memory. Also, multiple computing devices **900** may be connected, with each device providing portions of the necessary operations (e.g., as a server bank, a group, of blade servers, or a multi-processor system).

[0100] The memory **904** stores information within the computing device-**900**. In one implementation, the memory **904** is a computer-readable medium. In one implementation, the memory **904**, is a volatile memory unit or units. In another implementation, the memory **904** is a non-volatile memory unit or units. The storage device **906** is capable of providing mass storage for the computing device **900**. In one implementation, the storage device **906** is a computer-readable medium. In various different implementations, the storage device **906** may be a floppy disk device a hard disk-device, an optical disk device, or a tape device flash memory or other similar solid state memory device, or an array of devices, including devices in a storage-area network or other configurations. In one implementation, a computer program product is tangibly embodied in an information carrier. The computer program-product contains instructions that, when executed, perform one or more methods, such as those described above. The information carrier is a computer or machine-readable medium, such as the memory **904**, the storage device **906**, memory on processor **902**, or a propagated signal.

[0101] The high speed controller **908** manages bandwidth-intensive operations for the computing device **900**, while the low speed controller **912** manages lower bandwidth-intensive operations. Such allocation of duties is exemplary only. In one implementation, the high-speed controller **908** is coupled to memory **904**, display **916** (e.g., through a graphics processor or accelerator) and to high-speed expansion ports **910**, which may accept various expansion cards (not shown). In the implementation, low-speed controller **912** is coupled to storage device **906** and low-speed expansion port **914**. The low-speed expansion port, which may include various-communication ports (e.g., USB, Bluetooth, Ethernet, wireless Ethernet) may be coupled to one or more input/output devices, such as a keyboard, a pointing device, a scanner, or a networking device such as a switch or router, e.g., through a network-adapter.

[0102] The computing device **900** may be implemented in a number of different forms, as shown in the figure. For example, it may be implemented as a standard server **920**, or multiple times in a group of servers. It may also be implemented as part of a rack server system **924**. In addition, it may be implemented in a personal computer such as a laptop computer **922**. Alternatively, components from computing device **900** may be combined with other components in a mobile device (not: shown), such as device **950**. Each of such devices may contain one or more of computing device **900**, **950**, and an entire system may be made up of multiple computing devices **900**, **950** communicating with each other.

[0103] Computing device **950** includes a processor **952**, memory **964**, an input/output device such as a display **954**, a communication interface **966**; and a transceiver **968** among other components. The device **950** may also be provided with a storage device, such as a micodrive or other device, to provide additional storage. Each of the components **950**, **952**, **964**, **954**, **966**, and **968**, are interconnected using various buses, and several of the components may be mounted on a common motherboard or in other manners as appropriate.

[0104] The processor **952** may process, instructions for execution within the computing device **950**, including instructions stored in the memory **964**. The processor may also include separate analog and digital processors. The processor may provide, for example, for coordination of the other components of the device **950**, such as control of user interfaces, applications run by device **950**, and wireless communication by device **950**.

[0105] Processor **952** may communicate with a user through control interface **958** and display interface **956** coupled to a display **954**. The display **954** may be, for example, a TFT LCD display or an OLED display, or other appropriate display-technology. The display interface **956** may include appropriate circuitry for driving the display **954** to present graphical and other information to a user. The control interface **958** may receive commands from a user and

convert them for submission to the processor **952**. In addition, an external interface **962** may be provide in communication with processor **952**, so as to enable near area communication of device **950** with other devices. External interface **962** may provide for example, for wired communication (e.g., via a docking procedure) or for wireless communication (e.g., via Bluetooth or other such technologies).

[0106] The memory **964** stores information within the computing device **950**. In one implementation, the memory **964** is a computer-readable medium. In one implementation, the memory **964** is a volatile memory unit or units. In another implementation, the memory **964** is a non-volatile memory unit or units. Expansion memory **974** may also be provided and connected to device **950** through expansion interface **972**, which may include, for example, a SIMM card interface. Such expansion memory **974** may provide extra storage space for device **950**, or may also store applications or other information for device **950**. Specifically, expansion memory **974** may include instructions to carry out or supplement the processes described above, and may include secure information also. Thus, for example, expansion memory **974** may be provide as a security module for device **950**, and may be programmed with instructions that permit secure use of device **950**. In addition, secure applications may be provided via the SIMM cards, along with additional information, such as placing identifying information on the SIMM card in a non-hackable manner.

[0107] The memory may include for example, flash memory and/or MRAM memory, as discussed below. In one implementation, a computer program product is tangibly embodied in an information carrier. The computer program product contains instructions that, when executed, perform one or more methods, such as those described above. The information carrier is a computer or machine-readable medium, such as the memory **964**, expansion memory **974**, memory on processor **952**, or a propagated signal.

[0108] Device **950** may communicate wirelessly through communication interface **966**, which may include digital signal processing circuitry where necessary. Communication interface **966** may provide for communications under various modes or protocols, such as GSM voice calls, SMS, EMS, or MMS messaging, CDMA, TDMA, PDC, WCDMA, CDMA2000, or GPRS among others. Such communication may occur, for example, through radio-frequency transceiver **968**. In addition, short-range communication may occur, such as using a Bluetooth, WiFi, or other such transceiver (not shown). In addition, GPS receiver module **970** may provide additional wireless data to device **950**, which may be used as appropriate by applications running on device **950**.

[0109] Device **950** may also communication audibly using audio codec **960**, which may receive spoken information from a user and convert it to usable-digital information. Audio codex **960** may likewise generate audible sound for a user, such as through a speaker, e.g., in a handset of device **950**. Such, sound may include sound from voice telephone calls, may include recorded sound (e.g., voice messages, music files, etc.) and may also include sound generated by applications operating on device **950**.

[0110] The computing device **950** may be implemented in a number of different forms, as shown in the figure. For example, it may be implemented as a cellular telephone **980**. It may also be implemented as part of a smartphone **982**, personal digital assistant, or other similar mobile device.

[0111] Various implementations of the systems and techniques described here may be realized in digital electronic circuitry, integrated circuitry, specially designed ASICs (application specific integrated circuits); computer hardware, firmware, software and/or combinations thereof. These various implementations may include implementation in one or more computer programs that are executable and/or interpretable on a programmable system including at least one programmable processor, which may be special or general purpose, coupled to receive-data and instructions from, and to transmit data and instructions to, a storage system, at least one input device, and at least one output device.

[0112] These computer programs (also known as programs, software, software applications or code) include machine instructions for a programmable processor, and may be implemented in a high-level procedural and/or object oriented programming language, and/or in assembly/machine language. As used herein, the terms "machine-readable medium" "computer-readable medium" refers to any computer program product, apparatus and/or device (e.g., magnetic, discs, optical disks, memory, Programmable Logic Devices (PLDs)) used to provide machine-instructions and/or data to a programmable processor, including a machine-readable; medium that receives machine instructions as a machine-readable signal. The term "machine-readable signal" refers to any signal used to provide machine instructions and/or data to a programmable processor.

[0113] To provide for interaction with a user, the systems and techniques described here may be implemented on a computer having a display de-vice (e.g., a CRT (cathode ray tube) or LCD (liquid crystal display) monitor) for displaying information to the user and a keyboard and a pointing device (e.g., a mouse or a trackball) by which the user may provide input to the computer. Other kinds of devices may be used to provide for interaction with a user as well; for example, feedback provided to the user may be any form of sensory feedback (e.g., visual feedback, auditory feedback, or tactile feedback); and input from the user may be received in any form, including acoustic, speech, or tactile input.

[0114] The systems and techniques described here may be implemented in a computing system that includes a back end component (e.g., as a data server), or that includes a middleware component (e.g., an application server), or that includes a front end component (e.g., a client computer having a graphical user interface or a Web browser through which a user may interact with an implementation of the systems and techniques described here), or any combination of such-back end, middleware, or front end components. The components of the system may be interconnected by any form or medium of digital data communication (e.g., a communication network). Examples of communication networks include a local area network ("LAN"), a wide area network ("WAN"), and the Internet.

[0115] The computing system may include clients and servers; A client and server are generally remote from each other and typically interact through a communication network. The relationship of client and server arises by virtue of computer programs running on the respective computers and having a client-server relationship to each other.

[0116] A number of implementations have been described. Nevertheless, it Will be understood that various modifications may be made without departing from the spirit and scope of the disclosure. Accordingly, other implementations are within the scope of the following claims.

What is claimed is:

1. A computer-implemented method comprising:

defining a scan envelope of a mobile reader;

determining, based on performing a high-level query at a resource planning module, items expected within the defined scan envelope;

generating a low-level query comprising a tuning parameter that selectively includes or excludes the determined items;

transmitting the low-level query via the mobile reader; and

outputting an indicia of items that respond to the low-level query.

2. The method of claim **1**, wherein the scan envelope is defined based on determining a absolute or relative location and scanning direction of the mobile reader.

3. The method of claim **1**, wherein the location of the mobile reader is determined using Active Bat, Cricket, an infrared cell-of-origin system, a radio beacon, or an active Or passive Radio Frequency IDentification (RFID) device.

4. The method of claim **1**, wherein the indicia further comprises a quantity of the items that respond to the query.

5. The method of claim **1**, wherein the indicia further comprises a unique identifier of each of the items that responds to the low-level query.

6. The method of claim **1**, further comprising determining, based on a tuning parameter that selectively excludes the determined items and further based on the output indicia, whether a plan-o-gram is satisfied.

7. The method of claim **1**, further comprising generating, based on a tuning parameter that selectively includes the determined items and further based on the output indicia, an inventory of the items that respond to the low-level query.

8. The method of claim **1**, wherein outputting the indicia further comprises updating, using the indicia, a database disposed on the mobile reader.

9. The method of claim **1**, wherein:

the mobile reader is a mobile Radio Frequency IDentification (RFID) device, and

the low-level query is formatted according to the EPC Gen 2 standard.

10. The method of claim **1**, wherein the low-level query further comprises a frame length parameter, generated based on a quantity of the items expected within the defined scan envelope.

11. The method of claim **10**, further comprising iteratively modifying the frame length parameter based on a quantity of the items that respond to the low-level query.

12. The method of claim **1**, wherein determining the items expected within the defined scan envelope further comprises:

transmitting, from the mobile device and to a resource planning module, a parameter that describes the defined scan envelope;

generating, at the resource planning module, the high-level query, level query further comprising the transmitted parameter;

performing the high-level query at the resource planning module; and

receiving, at the mobile device and from the resource planning module, a response to the high-level query, the response comprising the items expected within the defined scan envelope.

13. The method of claim **1**, wherein determining the items expected within the defined scan envelope further comprises:

performing the high-level query at the resource planning module;

iteratively receiving, at the mobile device and from the resource planning module, a response to the high-level query, the response comprising items expected within a plurality of locations;

determining, at the mobile reader and based on comparing the items expected within the plurality of locations with the defined scan envelope; the items expected within the defined scan envelope.

14. The method of claim **1**, wherein determining the items expected within the defined scan envelope further comprises:

transmitting, from the mobile reader to the resource planning module and based on receiving a request, data indicative of the defined scan envelope;

performing the high-level query at the resource planning module; and

receiving, at the mobile reader and based on performing the high-level query, data indicative of the items expected within the defined scan envelope.

15. The method of claim **1**, wherein determining the items expected within the defined scan envelope further comprises:

performing the high-level query at the resource planning module;

receiving, at the mobile reader and from the resource planning module and based on performing the high-level query, a list of items expected within a plurality of locations; and

determining, at the mobile reader and based on comparing the list of items expected within the plurality of locations with the defined scan envelope, the items expected within the defined scan envelope.

16. The method of claim **1**, further comprising detecting an out-of-stock condition based on the output indicia.

17. The method of claim **1**, further comprising:

receiving, from a back-end enterprise resource planning system, an inventory list,

wherein outputting the indicia of items that respond to the low-level query further comprises updating the inventory list with the indicia.

18. A computer program product, tangibly embodied in a machine-readable medium, the computer program product comprising instructions that, when read by a machine, operate to cause data processing apparatus to:

define a scan envelope of a mobile reader;

determine, based on performing a high-level query at a resource planning module, items expected within the defined scan envelope;

generate a low-level query comprising a tuning parameter that selectively includes or excludes the determined items;

transmit the low-level query via the mobile reader; and

output an indicia of items that respond to the low-level query.

19. A system comprising:

a processor configured to:

define a scan envelope of a mobile reader,

determine, based on performing a high-level query at a resource planning module, items expected within the defined scan envelope, and

generate a low-level query comprising a tuning parameter that selectively includes or excludes the determined items; and

an output module configured to:

transmit the low-level query via the mobile reader, and

output an indicia of items that respond to the low-level query.

20. The system of claim **19**, further comprising a shopping cart upon which the processor and output module are mounted.

* * * * *