Legal Advantage LLC
Washington DC
10411 Motor City Drive
Suite 750, Bethesda, MD 20817
Phone: 301-637-6180
Fax: 800-804-4220

CERTIFICATION OF TRANSLATION

Original text full file name:

JP2008077131A - Fujiwara

Translation full file name:

JP2008077131A - Fujiwara-Final-EN

This is to certify that the attached documents in English language with the above title are a true and accurate translation, and has the same meaning as the text of the original documents of the Japanese language to the best of our knowledge and belief. This translation is performed and edited by Japanese to English professional translators (ATA).

Executed this 13th day of October 2023.

Hal Pieroway
Translation Department

Legal Advantage LLC uses all available measures to ensure the accuracy of each translation but shall not be held liable for damages due to error or negligence in translation or transcription.

(19) Japanese Patent Office (JP) **(12) Publication of Unexamined Patent Application (A)**

(11) Patent Application Publication No. 2008-77131 (P2008-77131A)

(43) Publication Date: April 3, 2008

(51) Int. Cl.			FI			Theme code (ref.)
G06Q	50/00	(2006.01)	G06F	17/60	118	3B118
G06Q	10/00	(2006.01)	G06F	17/60	144	3F022
A47F	5/00	(2006.01)	G06F	17/60	510	5B058
B65G	1/137	(2006.01)	A47F	5/00	E	5B072
G06K	17/00	(2006.01)	B65G	1/137	A	

Request for Examination: Not Requested Number of Claims: 29 OL Total pages: 26

(21) Application No.: 2006-252120 (P2006-252120)

(22) Application Date: September 19, 2006

(71) Applicant 000002897
Dai Nippon Printing Co., Ltd.
1-1-1 Ichigaya Kaga-cho, Shinjuku-ku, Tokyo

(74) Agent 100096091
INOUE Seiichi, Patent Attorney

(72) Inventor FUJIWARA Keiichiro
c/o Dai Nippon Printing Co., Ltd. 1-1-1, Ichigaya Kaga-cho, Shinjuku-ku, Tokyo

F term (reference) 3B118 FA11
3F022 AA15 FF01 LL02 MM07 MM22 PPOO QQ11
5B058 CAI7
5B072 CC21 CC24

(54) [Title of invention] Location recognition system, collaborative system of electronic shelf label and mobile information terminal, store server, electronic shelf label, product display shelf, mobile information terminal, program, and storage medium

(57) ABSTRACT

PROBLEM

To provide a collaborative system of electronic shelf label and mobile information terminal that provides functions for specifying a location of products in a store and presenting the product location, using electronic shelf labels and mobile information terminals equipped with IC tags and light emitting means.

RESOLUTION MEANS

An electronic shelf label 103 provided with an IC tag 10, and an IC tag reader 104 are mounted on the product display shelf 20; the IC tag reader 104 is provided with reading means 131 for reading the shelf label ID of the IC tag 10, and read information transmitting means 132 for transmitting the shelf label ID and the sender ID to the store server 101; and the store server 101 locates and displays the location of the product by providing location information recognizing means 111 for storing location information specified by the sender ID and the shelf label location information 320 associated with the shelf label ID in the electronic shelf label database 301, information distributing means 112 to the mobile information terminal 105, and light emission instructing means 113 for the electronic shelf label 103 corresponding to the product.

[Selected Drawing] FIG. 1

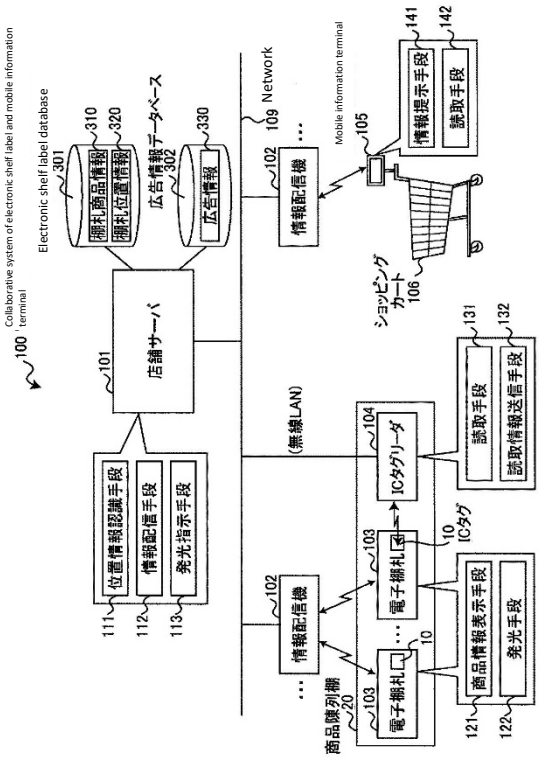

CLAIMS
[Claim 1]
A location recognizing system, comprising:
one or more electronic shelf labels corresponding to each product on the sales floor and displaying information about the product, a reading device that can mechanically identify one or more information storage media, and a store server connected wirelessly or by wire to transmit information related to the product corresponding to the electronic shelf label;
wherein
the electronic shelf label includes a mechanically identifiable information storage medium for storing an electronic shelf label ID;
the reading device is provided in a state in which the electronic shelf label ID stored in the information storage medium can always be read without contact, and includes:
reading means for collectively reading the electronic shelf label ID stored in the information storage medium built into the electronic shelf label, and
electronic shelf label ID transmitting means for transmitting the one or more electronic shelf label ID and the sender ID identifying the reading device to the store server;
the store server includes:
an electronic shelf label database storing shelf label product information that correlates the electronic shelf label information with the product information; and
identifying means for identifying the location information of the reading device from the sender ID received from the reading device, associating the location information with the received one or more electronic shelf label ID, and registering and storing the shelf label location information identifying the location of the electronic shelf label in the electronic shelf label database.
[Claim 2]
A location recognizing system, comprising: one or more electronic shelf labels corresponding to each product on the sales floor and displaying information about the product, a portable reading device that can mechanically identify information storage media, and a store server connected wirelessly or by wire to transmit information related to the product corresponding to the electronic shelf label, wherein
the electronic shelf label includes a mechanically identifiable information storage medium for storing the electronic shelf label ID, and a second information storage medium that is provided at a prescribed location of the shelf or fixture for placing one or more of the electronic shelf labels and stores location information;
wherein the reading device includes
a reading means for collectively reading the electronic shelf label ID stored in the information storage medium built into the electronic shelf label, and location information stored in the second information storage medium, and
a location information transmitting means for transmitting the read one or more electronic shelf label IDs and the location information to the store server; and
wherein the store server includes:
an electronic shelf label database storing shelf label product information that correlates the electronic shelf label information with the product information, and
identifying means for associating the location information and the electronic shelf label ID from the location information and the one or more electronic shelf label IDs, both received from the reading device, and registering and storing the shelf label location information identifying the location of the electronic shelf label in the electronic shelf label database.
[Claim 3]

A collaborative system of electronic shelf label and mobile information terminal, comprising: one or more electronic shelf labels corresponding to each product on the sales floor and displaying information about the product, one or more mobile information terminals installed in self-service transporters for storing and transporting products in a store, and a store server connected wirelessly or by wire to transmit information related to the product corresponding to the electronic shelf label, wherein
the store server includes:
an electronic shelf label database storing the shelf label product information associating the electronic shelf label information with the product information, as well as storing the shelf label location information identifying the location of the electronic shelf label,
information distributing means for distributing information about a product to the mobile information terminal, and
light emission instructing means for extracting electronic shelf label information associated with the product information of the product using the electronic shelf label database and transmitting light emission instructions to the electronic shelf label;
the mobile information terminal includes
information presenting means for displaying information about a product received by wireless communication from the store server; and
the electronic shelf label includes
receiving means for receiving light emission instruction by wireless communication from the store server, and
one or more light emitting means containing a collection of LEDs for illuminating or flashing in response to the light emission instruction.
[Claim 4]
A collaborative system of electronic shelf label and mobile information terminal, comprising: one or more electronic shelf labels corresponding to each product on the sales floor and displaying information about the product, one or more mobile information terminals installed in self-service transporters for storing and transporting products in a store, and a store server connected wirelessly or by wire to transmit information related to the product corresponding to the electronic shelf label, wherein
the electronic shelf label includes
a mechanically identifiable information storage medium for storing the electronic shelf label ID;
the mobile information terminal includes
a portable reading device that can mechanically identify an information storage medium,
reading means for collectively reading the electronic shelf label ID stored in the information storage medium built into the electronic shelf label,
shelf label ID transmitting means for transmitting the read one or more electronic shelf label IDs to the store server, and
information presenting means for displaying information about items associated with the electronic shelf label ID received from the store server; and
the store server includes:
an electronic shelf label database storing the shelf label product information associating the electronic shelf label information with the product information, and storing the shelf label location information identifying the location of the electronic shelf label,
acquiring means for acquiring the shelf label product information and the shelf label location information associated with the electronic shelf label ID from the one or more electronic shelf label IDs received from the mobile information terminal using the electronic shelf label database, and
information distributing means for transmitting information related to the product based on both the shelf label product information and the shelf label location information to the mobile information terminal.
[Claim 5]
A store server, connected wirelessly or by wire to one or more electronic shelf labels corresponding to each product on the sales floor and displaying information about the product, and a reading device that can mechanically identify one or more information storage media, that transmits information related to the product to the electronic shelf label, the store server comprising:
an electronic shelf label database storing shelf label product information that correlates the electronic shelf label information with the product information; and
identifying means for identifying the location information of the reading device from the sender ID received from the reading device, associating the location information with the received one or more electronic shelf label ID, and registering and storing the shelf label location information identifying the location of the electronic shelf label in the electronic shelf label database.
[Claim 6]

The store server according to claim 5, wherein the reading device is provided at a prescribed location of a shelf or fixture that displays the product to which the information storage medium is attached.
[Claim 7]
A store server, connected wirelessly or by wire to one or more electronic shelf labels corresponding to each product on the sales floor and displaying information about the product, and a portable reading device that can mechanically identify information storage media, that transmits information related to the product corresponding to an electronic shelf label, wherein
the electronic shelf label includes a mechanically identifiable information storage medium for storing the electronic shelf label ID,
a second information storage medium that is provided at a prescribed location of the shelf or fixture for placing one or more of the electronic shelf labels and stores location information,
an electronic shelf label database for storing shelf label product information that correlates the electronic shelf label information with the product information, and
identifying means for associating the location information and the electronic shelf label ID from the location information read and transmitted from the reading device and the one or more electronic shelf label IDs, and registering and storing the shelf label location information identifying the location of the electronic shelf label in the electronic shelf label database.
[Claim 8]
A store server that transmits information related to a product corresponding to an electronic shelf label, connected wirelessly or by wire to one or more electronic shelf labels corresponding to each product on the sales floor and displaying information about the product and one or more mobile information terminals installed in self-service transporters for storing and transporting products in a store, the store server comprising:
an electronic shelf label database storing the shelf label product information associating the electronic shelf label information with the product information, and storing the shelf label location information identifying the location information of the electronic shelf label;
information distributing means for transmitting information related to a product to the mobile information terminal; and
light emission instructing means for extracting electronic shelf label information associated with the product information of the product using the electronic shelf label database, and transmitting light emission instructions to the electronic shelf label.
[Claim 9]
The store server according to Claim 8, wherein
the information distributing means
distributes to the mobile information terminal information related to the product based on attribute information of a customer and associated light emission instruction content on the electronic shelf label as location display of the product.
[Claim 10]
A store server that transmits information related to the product corresponding to the electronic shelf label, connected wirelessly or by wire to one or more electronic shelf labels corresponding to each product on the sales floor and displaying information about the product, and to one or more mobile information terminals installed in a self-service transporter for storing and transporting products in a store, the store server comprising:
an electronic shelf label database storing the shelf label product information associating the electronic shelf label information with the product information, and the shelf label location information identifying the location information of the electronic shelf label,
acquiring means for acquiring the shelf label product information and the shelf label location information associated with the electronic shelf label ID from the one or more electronic shelf label IDs received from the mobile information terminal using the electronic shelf label database, and
information distributing means for transmitting shelf label product information and information related to the product based on the shelf label location information to the mobile information terminal.
[Claim 11]
The store server according to any one of Claim 5 to Claim 10, wherein the mechanically identifiable information storage medium is any one of a non-contact IC tag, two-dimensional barcode, or one-dimensional barcode.
[Claim 12]

The store server according to any one of Claim 5 to Claim 10, wherein the reading device that can mechanically identify the information storage medium is an IC tag reader or a barcode reader.
[Claim 13]
An electronic shelf label, provided for each product on a sales floor and connected wirelessly or by wire to a store server that transmits information about the product to the electronic shelf label, and displays information related to the product, the electronic shelf label comprising:
a mechanically identifiable information storage medium that stores the electronic shelf label ID.
[Claim 14]
An electronic shelf label, provided for each product on a sales floor and connected wirelessly or by wire to a store server that transmits information about the product to the electronic shelf label, that displays information related to the product, the electronic shelf label comprising:
receiving means for receiving light emission instruction by wireless communication from the store server; and
one or more light emitting means containing a collection of LEDs for illuminating or flashing in response to the light emission instruction.
[Claim 15]
The electronic shelf label according to Claim 13 or Claim 14, wherein the mechanically identifiable information storage medium is any one of a non-contact IC tag, two-dimensional barcode, or one-dimensional barcode.
[Claim 16]
A product display shelf comprising: one or more electronic shelf labels corresponding to each product and displaying information related to the product, and a reading device that can mechanically identify the information storage medium, wherein
the electronic shelf label includes a mechanically identifiable information storage medium for storing the electronic shelf label ID, and
the reading device is provided at a location where the shelf label ID stored in the information storage medium provided on the electronic shelf label can be read without contact.
[Claim 17]
A product display shelf, comprising: one or more electronic shelf labels corresponding to each product and displaying information related to the product, and a second mechanically identifiable information storage medium, wherein
the electronic shelf label includes a mechanically identifiable information storage medium for storing the electronic shelf label ID, and
the second mechanically identifiable information storage medium is provided at a prescribed location of a shelf or fixture on which one or more electronic shelf label are placed, and stores location information.
[Claim 18]
The product display shelf according to Claim 16 or Claim 17, wherein the mechanically identifiable information storage medium is any one of a non-contact IC tag, two-dimensional barcode, or one-dimensional barcode.
[Claim 19]
The product display shelf according to Claim 16 or Claim 17, wherein the reading device that can mechanically identify the information storage medium is an IC tag reader or a barcode reader.
[Claim 20]
The product display shelf according to claim 17, wherein the location information is a shelf number.
[Claim 21]
A mobile information terminal that is connected wirelessly or by wire to a store server that transmits information related to a product to the electronic shelf label, and that is provided on a self-service transporter that stores and transports products in the store, comprising:
a reading device that can mechanically identify a portable information storage medium;
reading means for collectively reading the electronic shelf label ID stored in the mechanically identifiable information storage medium built into the electronic shelf label;
shelf label ID transmitting means for transmitting the read one or more electronic shelf label IDs to the store server; and
information presenting means for displaying information about the items associated with the electronic shelf label ID received from the store server.

[Claim 22]
The mobile information terminal according to claim 21, wherein the mechanically identifiable information storage medium is any one of a non-contact IC tag, two-dimensional barcode, or one-dimensional barcode.
[Claim 23]
The mobile information terminal according to claim 21, wherein the reading device that can mechanically identify the information storage medium is an IC tag reader or a barcode reader.
[Claim 24]
A program that causes a computer to perform the function of the store server according to any one of claims 5 to 12.
[Claim 25]
Storage media for storing a program that causes a computer to perform the function of the store server according to any one of claims 5 to 12.
[Claim 26]
A program that causes a computer to perform the function of the electronic shelf label according to any one of claims 13 to 15.
[Claim 27]
Storage media for storing a program that causes a computer to perform the function of the electronic shelf label according to any one of claims 13 to 15.
[Claim 28]
A program that causes a computer to perform the function of as the mobile information terminal according to any one of claims 21 to 23.
[Claim 29]
Storage media for storing a program that causes a computer to perform the function of the mobile information terminal according to any one of claims 21 to 23.
DETAILED DESCRIPTION OF THE INVENTION
TECHINICAL FIELD
[0001]
The present invention relates to a system that enables a store to identify location information of a product in the store and inform of the location of the product, by using an electronic shelf label provided for each product on a product display shelf and a mobile information terminal.
CONVENTIONAL TECHNOLOGY
[0002]
In recent years, an electronic shelf label system has been implemented where electronic shelf labels with display functions are installed on product display shelves in supermarkets and other stores, and the electronic shelf labels display product prices. With this system, the product price displayed on the electronic shelf label can be easily changed at once by connecting wirelessly or by wire each electronic shelf label to a store server (computer) and distributing the product price from the store server to each electronic shelf label (see, for example, Patent Document 1).
[0003]
Furthermore, in recent years, stores and shopping centers that sell products displayed using a self-service format are using various systems that provide display devices on shopping carts, or the like, that carry products to be purchased, and transmit advertisements and in-store information to these devices.
For example, a shopping cart display system has been disclosed where advertisements and store information centrally controlled by a store server installed in the store are delivered to shopping carts by wireless communication via an access point connected to the store server by a LAN or the like (see, for example, Patent Document 2).

[0004]
Patent Document 1: Japanese Unexamined Patent Application 2000-287798
Patent Document 2: Japanese Unexamined Patent Application H11-152041
DISCLOSURE OF THE INVENTION
PROBLEM TO BE SOLVED BY THE INVENTION
[0005]
However, conventional electronic shelf label systems and methods have a problem in that the electronic shelf labels deliver only price information for the electronic shelf label associated with that product, and there is no means to automatically detect the location of the corresponding product in the store, thus making it difficult to automate providing product information.
In addition, even if product information and advertising information were provided to customers shopping by using mobile information terminals prepared for shopping carts, there is no function to inform them of the location of the relevant product in the store, making it difficult to find the relevant product.
[0006]
In light of the foregoing, an objective of the present invention is to provide a collaborative system of electronic shelf label and mobile information terminal, and the like, that provides a function for locating a product in a store and presenting the location of the product, by the use of an electronic shelf label equipped with an IC tag and a light emitting means, as well as the use of a mobile information terminal.
MEANS FOR SOLVING THE PROBLEM
[0007]
The first invention for achieving the aforementioned objective is a location recognizing system, comprising:
one or more electronic shelf labels corresponding to each product on the sales floor and displaying information about the product, a reading device that can mechanically identify one or more information storage media, and a store server connected wirelessly or by wire to transmit information related to the product corresponding to the electronic shelf label; wherein the electronic shelf label includes a mechanically identifiable information storage medium for storing an electronic shelf label ID; the reading device is provided in a state in which the electronic shelf label ID stored in the information storage medium can always be read without contact, and includes: reading means for collectively reading the electronic shelf label ID stored in the information storage medium built into the electronic shelf label, and electronic shelf label ID transmitting means for transmitting the one or more electronic shelf label IDs and the sender ID identifying the reading device to the store server; the store server includes: an electronic shelf label database storing shelf label product information that correlates the electronic shelf label information with the product information, and
identifying means for identifying the location information of the reading device from the sender ID received from the reading device, associating the location information with the received one or more electronic shelf label ID, and registering and storing the shelf label location information identifying the location of the electronic shelf label in the electronic shelf label database.
[0008]
With the location recognizing system according to the first invention, the electronic shelf label has a mechanically identifiable information storage medium for storing the electronic shelf label ID, and the reading device is provided in a state where the electronic shelf label ID stored in the information storage medium can always be read without contact, reads the electronic shelf label ID stored in the information storage medium built into the electronic shelf label collectively, and transmits the read one or more electronic shelf label IDs and the sender ID identifying the reading device to the store server. The store server has an electronic shelf label database that stores the shelf label product information that correlates the electronic shelf label information with the product information, identifies the location information of the reading device from the sender ID received from the reading device, associates the location information with one or more received electronic shelf label IDs, and registers and stores the shelf label location information that identifies the location of the electronic shelf label in the electronic shelf label database.
[0009]
"Product information" includes at least product ID and price information for the product.
"Location information" is the shelf number of the product display shelf.
The "light emitting means" includes one or more LEDs (Light Emitting Diode) such as red, green, blue, or the like. LEDs are a type of semiconductor device that emits light when an electric current is applied.
The "mechanically identifiable information storage medium" can be any of a non-contact IC tag, a two-dimensional barcode, or a one-dimensional barcode.

A "reading device that can mechanically identify an information storage medium" is an IC tag reader for a non-contact tag as an information storage medium, or a barcode reader for a two-dimensional barcode or a one-dimensional barcode as an information storage medium.

[0010]

The first invention demonstrates an effect where a burden on a person in charge of product management can be reduced because product location can automatically be recognized for each product in the store, and the person in charge of the store can automatically identify the locations of many products in the store.

[0011]

Furthermore, the second invention is a location recognizing system, comprising: one or more electronic shelf labels corresponding to each product on the sales floor and displaying information about the product, a portable reading device that can mechanically identify information storage media, and a store server connected wirelessly or by wire to transmit information related to the product corresponding to the electronic shelf label, wherein the electronic shelf label includes a mechanically identifiable information storage medium for storing the electronic shelf label ID, and

a second information storage medium that is provided at a prescribed location of the shelf or fixture for placing one or more of the electronic shelf labels and stores location information;

wherein the reading device includes

a reading means for collectively reading the electronic shelf label ID stored in the information storage medium built into the electronic shelf label, and location information stored in the second information storage medium, and

a location information transmitting means for transmitting the read one or more electronic shelf label IDs and the location information to the store server; and

wherein the store server includes:

an electronic shelf label database storing shelf label product information that correlates the electronic shelf label information with the product information, and

an identifying means for associating the location information and the electronic shelf label ID from the location information and the one or more electronic shelf label IDs, both received from the reading device, and registering and storing the shelf label location information identifying the location of the electronic shelf label in the electronic shelf label database.

[0012]

With the location recognizing system according to the second invention, the electronic shelf label has a mechanically identifiable information storage medium for storing the electronic shelf label ID, and second information storage medium that stores location information, provided at a prescribed location on the shelf or fixture where one or more electronic shelf labels are placed, and the reading device collectively reads the electronic shelf label ID and the location information stored in the second information storage medium, and transmits the one or more electronic shelf label ID and the location information that was read to the store server. The store server has an electronic shelf label database that stores the shelf label product information that correlates the electronic shelf label information with the product information, associates the location information with the electronic shelf label ID based on the location information and the one or more electronic shelf label IDs received from the reading device, and registers and stores the shelf label location information that identifies the location of the electronic shelf label in the electronic shelf label database.

[0013]

Furthermore, the third invention is a collaborative system of electronic shelf label and mobile information terminal, comprising: one or more electronic shelf labels corresponding to each product on the sales floor and displaying information about the product, one or more mobile information terminals installed in self-service transporters for storing and transporting products in a store, and a store server connected wirelessly or by wire to transmit information related to the product corresponding to the electronic shelf label, wherein the store server includes:

an electronic shelf label database storing the shelf label product information associating the electronic shelf label information with the product information, as well as storing the shelf label location information identifying the location of the electronic shelf label, information distributing means for distributing information about a product to the mobile information terminal, and light emission instructing means for extracting electronic shelf label information associated with the product information of the product using the electronic shelf label database and transmitting light emission instructions to the electronic shelf label;

the mobile information terminal includes information presenting means for displaying information about a product received by wireless communication from the store server; and the electronic shelf label includes

receiving means for receiving light emission instruction by wireless communication from the store server, and

one or more light emitting means containing a collection of LEDs for illuminating or flashing in response to the light emission instruction.

[0014]
With the collaborative system of electronic shelf label and mobile information terminal according to the third invention, the store server has an electronic shelf label database that stores shelf label product information that associates the electronic shelf label information and the product information and stores shelf label location information for identifying the location on the electronic shelf label, transmits the information related to the product to the mobile information terminal, extracts the electronic shelf label information corresponding to the product information of that product using the electronic shelf label database, and transmits light emission instructions to the electronic shelf label.
The mobile information terminal displays information related to the product that was received by wireless communication from the store server. The electronic shelf label receives the light emission instructions from the store server by wireless communication, and causes one or more light emitting device including a collection of LEDs to illuminate or flash based on the light emission instructions.
[0015]
Furthermore the fourth invention is a collaborative system of electronic shelf label and mobile information terminal, comprising: one or more electronic shelf labels corresponding to each product on the sales floor and displaying information about the product, one or more mobile information terminals installed in self-service transporters for storing and transporting products in a store, and a store server connected wirelessly or by wire to transmit information related to the product corresponding to the electronic shelf label, wherein the electronic shelf label includes a mechanically identifiable information storage medium for storing the electronic shelf label ID; the mobile information terminal includes a portable reading device that can mechanically identify an information storage medium, reading means for collectively reading the electronic shelf label ID stored in the information storage medium built into the electronic shelf label,
shelf label ID transmitting means for transmitting the read one or more electronic shelf label IDs to the store server, and information presenting means for displaying information about items associated with the electronic shelf label ID received from the store server; and
the store server includes: an electronic shelf label database storing the shelf label product information associating the electronic shelf label information with the product information, and storing the shelf label location information identifying the location of the electronic shelf label, acquiring means for acquiring the shelf label product information and the shelf label location information associated with the electronic shelf label IDs from the one or more electronic shelf label IDs received from the mobile information terminal using the electronic shelf label database, and information distributing means for transmitting information related to the product based on both the shelf label product information and the shelf label location information to the mobile information terminal.
[0016]
With the collaborative system of electronic shelf label and mobile information terminal according to the fourth invention, the electronic shelf label has a mechanically identifiable information storage medium for storing the electronic shelf label ID, and the mobile information terminal has a portable reading device that can mechanically identify information storage media, and can collectively read the electronic shelf label ID stored in the information storage medium built into the electronic shelf label, transmits the one or more electronic shelf label IDs that were read to the store server, and displays information related to a product associated with the electronic shelf label ID that was received from the store server. The store server has an electronic shelf label database that stores shelf label product information that associates the electronic shelf label information and the product information, and acquires the shelf label product information and the shelf label location information corresponding to the electronic shelf label IDs from the one or more electronic shelf label IDs that were received from the mobile information terminal using the electronic shelf label database, and transmits the information related to the product, based on both the shelf label product information and the shelf label location information, to the mobile information terminal.
[0017]
Furthermore, the fifth invention is a store server, connected wirelessly or by wire to one or more electronic shelf labels corresponding to each product on the sales floor and displaying information about the product, and a reading device that can mechanically identify one or more information storage media, that transmits information related to the product to the electronic shelf label, the store server comprising: an electronic shelf label database storing shelf label product information that correlates the electronic shelf label information with the product information; and identifying means for identifying the location information of the reading device from the sender ID received from the reading device, associating the location information with the received one or more electronic shelf label ID, and registering and storing the shelf label location information identifying the location of the electronic shelf label in the electronic shelf label database.
[0018]
The fifth invention is an invention relating to the store server used in the location recognizing system of the first invention.
[0019]

Furthermore, the sixth invention is a store server, connected wirelessly or by wire to one or more electronic shelf labels corresponding to each product on the sales floor and displaying information about the product, and a portable reading device that can mechanically identify information storage media, that transmits information related to the product to the electronic shelf label, wherein the electronic shelf label includes a mechanically identifiable information storage medium for storing the electronic shelf label ID, a second information storage medium that is provided at a prescribed location of the shelf or fixture for placing one or more of the electronic shelf labels and stores location information,
an electronic shelf label database for storing shelf label product information that correlates the electronic shelf label information with the product information; and
identifying means for associating the location information and the electronic shelf label ID from the location information and the one or more electronic shelf label IDs, both read and transmitted from the reading device, and registering and storing the shelf label location information identifying the location of the electronic shelf label in the electronic shelf label database.
[0020]
The sixth invention is an invention relating to the store server used in the location recognizing system of the second invention.
[0021]
Furthermore, the seventh invention is a store server that transmits information related to a product corresponding to an electronic shelf label, connected wirelessly or by wire to one or more electronic shelf labels corresponding to each product on the sales floor and displaying information about the product and one or more mobile information terminals installed in self-service transporters for storing and transporting products in a store, the store server comprising: an electronic shelf label database storing the shelf label product information associating the electronic shelf label information with the product information, and storing the shelf label location information identifying the location information of the electronic shelf label; information distributing means for distributing information about a product to the mobile information terminal; and light emission instructing means for extracting electronic shelf label information associated with the product information of the product using the electronic shelf label database and transmitting light emission instructions to the electronic shelf label.
[0022]
The seventh invention relates to the store server used by the collaborative system of electronic shelf label and mobile information terminal of the third invention.
[0023]
Furthermore, the eighth invention is a store server that transmits information related to a product corresponding to an electronic shelf label, connected wirelessly or by wire to one or more electronic shelf labels corresponding to each product on the sales floor and displaying information about the product and one or more mobile information terminals installed in self-service transporters for storing and transporting products in a store, the store server comprising: an electronic shelf label database storing the shelf label product information associating the electronic shelf label information with the product information, and storing the shelf label location information identifying the location information of the electronic shelf label, acquiring means for acquiring the shelf label product information and the shelf label location information associated with the electronic shelf label IDs from the one or more electronic shelf label IDs received from the mobile information terminal using the electronic shelf label database, and information distributing means for transmitting information related to the product, based on the shelf label product information and the shelf label location information, to the mobile information terminal.
[0024]
The eighth invention relates to the store server used by the collaborative system of electronic shelf label and mobile information terminal of the fourth invention.
[0025]
Furthermore, the ninth invention is an electronic shelf label, provided for each product on sales floor and connected wirelessly or by wire to a store server that transmits information about the product corresponding to the electronic shelf label, and displays information related to the product, the electronic shelf label comprising:
a mechanically identifiable information storage medium that stores the electronic shelf label ID.
[0026]
The electronic shelf label according to the ninth invention includes a mechanically identifiable information storage medium for storing the electronic shelf label ID.
[0027]
Furthermore, the tenth invention is an electronic shelf label, provided for each product on sales floor and connected wirelessly or by wire to a store server that transmits information about the product corresponding to the electronic shelf label, and displays information related to the product, the electronic shelf label comprising: receiving means for receiving light emission instruction by wireless communication from the store server; and one or more light emitting means containing a collection of LEDs for illuminating or flashing in response to the light emission instruction.

[0028]
The electronic shelf label according to the tenth invention has receiving means for receiving light emission instructions by wireless communication from the store server, and one or more light emitting means containing a collection of LEDs that illuminate or flash in response to the light emission instruction.
[0029]
Furthermore, the 11th invention is a product display shelf comprising: one or more electronic shelf labels corresponding to each product and displaying information related to the product, and a reading device that can mechanically identify an information storage medium, wherein the electronic shelf label includes a mechanically identifiable information storage medium for storing the electronic shelf label ID, and the reading device is provided at a location where the shelf label ID stored in the information storage medium provided on the electronic shelf label can be read without contact.
[0030]
The product display shelf according to the 11th invention has an electronic shelf label with an integrated mechanically identifiable information storage medium for storing the electronic shelf label ID, and a reading device that can mechanically identify the information storage medium and that is provided at a location where the shelf label ID stored in the information storage medium in the electronic shelf label can be read without contact.
[0031]
Furthermore, the 12th invention is a product display shelf, comprising: one or more electronic shelf labels corresponding to each product and displaying information related to the product, and a second mechanically identifiable information storage medium, wherein the electronic shelf label includes a mechanically identifiable information storage medium for storing the electronic shelf label ID, and the second mechanically identifiable information storage medium is provided at a prescribed location of a shelf or fixture on which one or more electronic shelf label are placed, and stores location information.
[0032]
The product display shelf according to the 12th invention has an electronic shelf label with an integrated mechanically identifiable information recording medium that stores the electronic shelf label ID, and a second mechanically identifiable information storage medium that stores location information, provided at a prescribed location of the shelf or fixture where one or more electronic shelf labels are placed.
[0033]
Furthermore, the 13th invention is a mobile information terminal that is connected wirelessly or by wire to a store server that transmits information related to a product to the electronic shelf label, and that is provided on a self-service transporter that stores and transports products in the store, comprising: a reading device that can mechanically identify a portable information storage medium; reading means for collectively reading the electronic shelf label ID stored in the mechanically identifiable information storage medium built into the electronic shelf label; shelf label ID transmitting means for transmitting the read one or more electronic shelf label IDs to the store server; and information presenting means for displaying information about the item associated with the electronic shelf label ID received from the store server.
[0034]
The 13th invention relates to a mobile information terminal used by the collaborative system of electronic shelf label and mobile information terminal of the fourth invention.
[0035]
The 14th invention is a program that causes a computer to perform the function of the store server according to any one of the fifth to eighth inventions.
The 15th invention is a storage medium that stores a program that causes a computer to perform the function of the store server according to any one of the fifth to eighth inventions.
[0036]
The 16th invention is a program that causes a computer to perform the function of the electronic shelf label of the ninth invention or the tenth invention.
The 17th invention is storing media for storing a program that causes a computer to perform the function of the electronic shelf label according to the ninth invention or the tenth invention.
[0037]
The 18th invention is a program that causes a computer to perform the function of the mobile information terminal according to the 13th invention.
The 19th invention is storing media for storing a program that causes a computer to perform the function of the mobile information terminal according to the 13th invention.

[0038]
The program described above may be retained in storing media such as a CD-ROM and distributed, or this program may be transmitted/received via a communication line.
EFFECT OF THE INVENTION
[0039]
In light of the foregoing, the present invention can provide a collaborative system of electronic shelf label and mobile information terminal, and the like, that provides a function for locating a product in a store and presenting the location of the product by the use of an electronic shelf label equipped with an IC tag and a light emitting means, and the use of a mobile information terminal.
PREFERRED EMBODIMENT OF THE INVENTION
[0040]
Hereinafter, a preferred embodiment of the collaborative system of electronic shelf label and mobile information terminal li and the like of the present invention will be described in detail, while referring to the drawings. Note, in the following description and the accompanying drawings, configuration elements having substantially the same functional configuration will be designated by the same codes, and duplicate description will be omitted.
[0041]
FIG. 1 is a diagram depicting a schematic configuration of the collaborative system 100 of electronic shelf label and mobile information terminal according to the present embodiment. FIG. 1 depicts an example of a collaborative system 100 of electronic shelf label and mobile information terminal, and as depicted in FIG. 1, the collaborative system 100 of electronic shelf label and mobile information terminal includes a store server 101, one or more information distributing devices 102, one or more electronic shelf labels 103, one or more IC tag readers 104, one or more mobile information terminals 105 provided on shopping carts 106, a network 109, and the like.
[0042]
The collaborative system 100 of electronic shelf label and mobile information terminal includes a store server 101, an information distributing device 102, and an IC tag reader 104, connected via a network 109. The network 109 is a network such as a local area network (LAN), in-house LAN, or the like, and can be wired or wireless.
[0043]
The store server 101 is a personal computer or the like, and includes location information recognizing means 111, information distributing means 112, light emission instructing means 113, electronic shelf label database 301, advertising information database 302, and the like.
[0044]
The location information recognizing means 111 identifies the shelf number that is the location information of the IC tag reader from the sender ID and one or more electronic shelf label IDs, both received from the IC tag reader 104, associates the shelf number with the one or more electronic shelf label IDs, and registers and stores the shelf label location information 320 that specifies the location of the product in the electronic shelf label database 301. In addition, the shelf number and the electronic shelf label IDs are associated based on the shelf number and one or more electronic shelf label IDs, both received from the portable IC tag reader 107, and the shelf label location information 320 for specifying the location of the product is registered and stored in the electronic shelf label database 301.
The information distributing means 112 distributes advertising information 330 for the product to the mobile information terminal 105 using the advertising information database 302, and transmits the product information and shelf number corresponding to the one or more shelf label IDs 311 read from the mobile information terminal 105, as well as the advertising information 330 of the product, and the like.
The light emission instructing means 113 extracts the shelf label product information 310 corresponding to the product of the advertising information 330 delivered by the information distributing means 112, and transmits the light emission instructions to the electronic shelf label 103.

The shelf label product information 310 associated with the shelf label ID 311 and the product information 312 and the shelf label location information 320 corresponding to the shelf label ID 311 and the shelf number 313 (location information) are stored in the electronic shelf label database 301. The advertising information database 302 stores the advertising information 330 of the product (including advertising information, information related to the product, store information, and the like).

[0045]

The information distributing device 102 allocates sales floor in the store to a plurality of zones, and wirelessly transmits information sent from the store server 101 to the electronic shelf labels 103 provided on the product display shelf 20 and the mobile information terminals 105 on shopping carts 106 that have entered that zone.

[0046]

The electronic shelf label 103 has a thin plate shape, corresponds to each product on the product display shelf 20 of the store sales floor, and is installed in the upper frame or the lower frame of the product display shelf 20. The electronic shelf label 103 has an integrated IC tag 10 for storing the shelf label ID, product information presenting means 121, and light emitting means 122.

The product information presenting means 121 displays product information (product price, and the like) received by wireless communication from the store server 101 via the information distributing device 102.

The light emitting means 122 emits LED light in response to the light emission instructions received by wireless communication from the store server 101 via the information distributing device 102.

[0047]

An IC tag reader 104 is installed on each shelf part 21 forming a product display shelf 20, and includes reading means 131 and read-information transmitting means 132. The reading means 131 collectively reads the shelf label IDs stored in the IC tags 10 which are prepared for one or more electronic shelf labels 103 installed in the shelf part 21. The read-information transmitting means 132 wirelessly transmits the read shelf label IDs and the sender ID to the store server 101.

[0048]

The shopping cart 106 is a self-service transporter that stores and transports product inside a store, for example, inside stores and shopping centers that sell products displayed in a self-service format, and products to be purchased are placed inside and transported. The shopping cart 106 has a mobile information terminal 105.

The mobile information terminal 105 includes information presenting means 141, reading means 142, and the like. The information presenting means 141 presents (displays) the advertising information of a product corresponding to the current location and time transmitted from the store server 101 via the information distributing device 102 and the information related to the product based on the shelf label ID that was read. The reading means 142 reads the shelf label ID stored in the IC tag 10 of the nearby electronic shelf label 103 using a portable IC tag reader provided on the mobile information terminal 105, and transmits the shelf label ID to the store server 101.

[0049]

Next, the hardware configuration of the store server 101 will be described with reference to FIG. 2. FIG. 2 is a hardware configuration diagram of the store server 101.

[0050]

The store server 101 includes a control unit 201, a storage unit 202, a media input/output unit 203, a communication control unit 204, an input unit 205, a display unit 206, a printing unit 207, and the like, connected via a system bus 209.

[0051]

The control unit 201 includes a CPU (Central Processing Unit), ROM (Read Only Memory), RAM (Random Access Memory), and the like.

[0052]

The CPU calls up a program stored in the storage unit 202 or the like and executes the program in a work memory area on the RAM, drives and controls each device connected via the system bus 209, and provides various processes, described later (see FIGS. 11 to 14), that are performed by the store server 101.

ROM is non-volatile memory that permanently holds computer boot programs, programs such as BIOS, data, and the like.

RAM is volatile memory, which temporarily holds programs, data, and the like, loaded from the storage unit 202, ROM, recording medium, and the like, and has a work area used by the control unit 201 to perform various processes.

[0053]

The storage unit 202 is an HDD (hard disk drive), and stores programs executed by the control unit 201, data necessary for executing the program, an OS (operating system), and the like. The stored program can be a control program 391 corresponding to an OS (operating system) or an application program 392 corresponding to the processing, described later (see FIGS. 10 and 12 to 14), performed by the store server 101 that uses the computer.

These program codes are read by the control unit 201 as necessary, transferred to RAM, read to the CPU, and executed as various means.

[0054]

The media input/output unit 203 (drive device) performs data input/output, and examples include a floppy disk drive, a PD drive, a CD drive (-ROM, -R, -RW, or the like), a DVD drive (-ROM, -R, -RW, or the like), or a media input/output device such as an MO drive, or the like.

[0055]

The communication control unit 204 has a communication control device, a communication port, and the like, and is a communication interface that mediates communication between the store server 101 and the network 109, and performs communication control between the store server 101, the information distributing device 102, and the IC tag reader 104 via the network 109.

[0056]

The input unit 205 performs data input and has an input device such as a keyboard, pointing device such as a mouse, and a numeric keypad.

Operating instructions, function instructions, data input, and the like can be performed for the store server 101 via the input unit 205.

[0057]

The display unit 206 has a logic circuit (video adapter, or the like) for performing video functions of a computer in cooperation with a display device such as a CRT monitor, a liquid crystal panel, and other display devices.

[0058]

The printing unit 207 is a printer, and performs print output processing.

[0059]

The system bus 209 is a path that mediates the transfer of control signals, data signals, and the like between devices.

[0060]

Next, with reference to FIG. 3, the information stored by the storage unit 202 of the store server 101 will be described. FIG. 3 is a diagram depicting information stored by the storage unit 202.

[0061]

An electronic shelf label database 301, an advertising information database 302, a control program 391, an application program 392, and the like are stored in the storage unit 202.

[0062]

The electronic shelf label database 301 includes a plurality of shelf label product information 310 and shelf label location information 320. The shelf label product information 310 has shelf label ID 311, product information 312, and the like. The shelf label ID 311 is the identification information of the electronic shelf label 103. The product information 313 is information related to the product to be displayed on the electronic shelf label 103 (product ID, product price, and the like). The shelf label location information 320 includes shelf label ID 311, shelf number 313, and the like. The shelf number 313 is the location information for each shelf part 21 of the product display shelf 20.

[0063]
The advertising information database 302 includes a plurality of advertisement information 330. The advertising information 330 is information provided from advertisers/store such as advertisements, pop content, in-store information, and contains advertising information ID, advertisement data (video, still image, character data, and the like), and the like.
[0064]
Incidentally, the data structure of the electronic shelf label database 301 and the advertising information database 302 is not limited to this configuration.
[0065]
The control program 391 is a program that drives and controls each component of the store server 101, and corresponds to an OS (operating system).
The application program 392 is an executable program corresponding to location recognition processing, information distribution processing, and light emission instruction processing (see FIGS. 10 and 12 to 14) described later, which are performed by the store server 101.
[0066]
Next, with reference to FIG. 4, the appearance configuration of the electronic shelf label 103 (with integrated IC tag 10) and the IC tag reader 104 will be described. FIG. 4 is a diagram depicting the appearance configuration of the electronic shelf label 103 and IC tag reader 104.
The electronic shelf label 103 is provided corresponding to each product 22 in front of the shelf part 21 of the product display shelf 20 displaying the product 22. The electronic shelf label 103 displays information (such as product price) related to the displayed product 22. Furthermore, the electronic shelf label 103 also incorporates an IC tag 10 for storing the shelf label ID.
The IC tag readers 104-1, 104-2, … are provided in a state where the shelf label ID stored in the IC tag 10 integrated in one or more electronic shelf labels 103 on the same shelf part 21 on the front side of the shelf can be read collectively without contact at each shelf part 21-1, 21-2, … of the product display shelf 20.
[0067]
FIG. 5 is an appearance diagram of the electronic shelf label 103.
As depicted in FIG. 5, the electronic shelf label 103 has a wireless transmitting and receiving unit (infrared transmitting and receiving unit) 603, a display unit 604, one or more LED display units 605, a label 11, and the like, on the surface, and an IC tag 10 is provided inside the electronic shelf label 103.
The display unit 604 is a liquid crystal display or the like, and presents customers with (displays) product price and information for customers. The LED display unit 605 is one or more light emitting devices including LED light emitting elements emitting red, green, blue, and the like, and emits light in response to light emission instructions from the store server 101. The infrared transmitting and receiving unit 603 receives product pricing and information for customers delivered from the store server 101 and transmitted by wireless communication (for example, infrared communication) from the information distributing device 102. A label 12 is affixed to the underside of the display unit 604, and the product name, and the like, is printed thereon. The IC tag 10 incorporated in the electronic shelf label 103 stores the shelf label ID, which is the identification information of the electronic shelf label 103.
[0068]
FIG. 6 is a hardware configuration diagram of the electronic shelf label 103
As depicted in FIG. 6, the electronic shelf label 103 includes a control unit 601, a wireless transmitting and receiving unit 603, a display unit 604, an LED display unit 605, and the like connected via a bus 609.
[0069]
The control unit 601 includes a CPU, ROM, RAM, and the like.
The CPU calls up and executes the program stored in ROM to the work memory area of the RAM, drives and controls each device connected via the bus 609, and causes the processing described below (see FIG. 13) to be performed by the electronic shelf label 103.
The ROM is a nonvolatile memory that permanently stores program data for controlling each component of the electronic shelf label 103.
The RAM is a volatile memory, which temporarily holds communication addresses set by itself, product prices, information for customers, and the like, and provides a work area used by the control unit 601 to perform various processes.

[0070]
The wireless transmitting and receiving unit 603 is, for example, an infrared transmitting and receiving unit, and transmits and receives by wireless communication with the electronic shelf label 103 and the information distributing device 102 using a wireless antenna 608. The information distributing device 102 is a communication interface that mediates communication with the network 109, and performs communication control between the store information terminal 103 and the store server 101 via the network 109.
The display unit 604 (LCD) displays product price, information for customers, and the like.
The LED display unit 605 includes one or more LEDs, such as red, green, blue, and the like. LEDs are a type of semiconductor device that emits light when an electric current is applied.
[0071]
The IC tag 10 is a non-contact IC tag, which is usually formed by forming a coil-shaped antenna by photo-etching or etching after resist printing of a metal foil such as laminated aluminum foil on a substrate such as paper or various other materials such as PET, polypropylene, polyethylene, polystyrene, nylon, or the like, laminated with a metal layer, and then connecting an IC chip. The IC chip is connected to both end parts of the antenna.
In addition, the electronic shelf label 103 has a solar cell or thin battery (not depicted) as a drive source.
[0072]
FIG. 7 is a hardware configuration diagram of the IC tag reader 104.
As depicted in FIG. 7, the IC tag reader 104 includes a control unit 401, storage unit 402, microwave transmitting and receiving unit 403, communication control unit 404, antenna 405, and the like. The IC tag reader 104 transmits a call-up signal resonant with respect to the electronic shelf label 103 (with integrated IC tag 10), reads the response signal from the IC tag 10 at a distance of several to several tens of centimeters, and reads the shelf label ID, which is the information recorded in the IC tag 10.
[0073]
The control unit 401 includes a CPU, ROM, RAM, and the like, and drives and controls each device in accordance with a program stored in the storage unit 402, thereby causing the processes described later (see FIG. 10) to be performed by the IC tag reader 104.
[0074]
The storage unit 402 stores, as a control program or application program for driving and controlling each component, an executable program corresponding to the reading means 131, reading information transmitting means 132, or the like, and a source ID, or the like, which identifies the IC tag reader 104 when providing information to the store server 101.
[0075]
Each of these program codes is read by the control unit 401 as necessary, transferred to RAM, read to the CPU, and executed as various means.
[0076]
The microwave transmitting and receiving unit 403 is a wireless communication interface that mediates communication between the IC tag reader 104 and the IC tag 10 via an antenna 405, and receives information stored in the memory of the IC tag 10.
[0077]
The communication control unit 404 is a communication interface that mediates communication between the IC tag reader 104 and the network 109, and performs communication control between the IC tag reader 104 and the store server 101 via the network 109.
Incidentally, the hand-held type IC tag reader 107 described below (see FIG. 11) has a similar hardware configuration.
[0078]
FIG. 8 is a diagram depicting the appearance of the shopping cart 106.
As depicted in FIG. 8, the shopping cart 106 is a mobile unit that stores and transports product inside a store, for example, inside stores and shopping centers that sell products displayed in a self-service format, and products to be purchased are placed inside and transported. The shopping cart 106 has a mobile information terminal 105.

[0079]
The mobile information terminal 105 has a display unit 504, which is a monitor with a touch panel, or the like, provided on a front surface. The display unit 504 displays advertising information or the like, related to products in the store. The IC tag reader 506 is installed next to the display unit 504. When held over an electronic shelf label 103 (with integrated IC tag 10) of the product display shelf 20, the response signal from the IC tag 10 is received by the IC tag reader 506.
[0080]
FIG. 9 is a diagram depicting the hardware configuration of the mobile information terminal 105.
As depicted in FIG. 9, the mobile information terminal 105 includes a control unit 501, storage unit 502, a wireless transmitting and receiving unit 503, display unit 504, input unit 505, IC tag reader 506, power control unit 507, battery 508, and the like, connected via a bus 509.
The storage unit 502 stores beforehand an executable program such as a control program or application program for driving and controlling each component part.
The wireless transmitting and receiving unit 503 is, for example, an infrared transmitting and receiving unit, and transmits and receives by wireless communication between the mobile information terminal 105 and the information distributing device 102 using a wireless antenna 510.
[0081]
The input unit 505 is, for example, a touch panel, operation key, operation button, or the like, that performs data input, and performs operation guidance, various processes, and operations displayed on the display unit 504 (liquid crystal display).
[0082]
The IC tag reader 506 transmits a call-up signal resonant with respect to the IC tags 10, 11, reads the response signal from the IC tags 10, 11 at a distance of several to several tens of centimeters, and reads the shelf label IDs, shelf numbers, and the like, which are the information recorded in the IC tags 10, 11.
The power control unit 507 is connected to the battery 508, and supplies and controls each component in the mobile information terminal 105.
[0083]
Next, for the collaborative system 100 of electronic shelf label and mobile information terminal according to the embodiment of the present invention, a procedure will be described for performing the location recognition process for products, that use the electronic shelf label 103 integrating the IC tag 10 that stores the shelf label ID 311 suitable for the location information recognizing means 111 of the reading means 131 of the IC tag reader 104, the read information transmitting means 132, and the store server 101. FIG. 10 is a flowchart depicting a procedure for performing location recognition processing of products using an electronic shelf label 103 (with integrated IC tag 10).
[0084]
As depicted in FIG. 10, the IC tag reader 104 is placed in a state that can communicate with the IC tag 10, and set so that the information stored in the memory of the IC tag 10 can always be read (step S1001). As depicted in FIG. 4 for example, the IC tag readers 104-1, 104-2, … are provided in a state where the shelf label ID stored in the IC tag 10 integrated in one or more electronic shelf labels 103 on the same shelf part 21 on the front side of the shelf can be read collectively without contact at each shelf part 21-1, 21-2, … of the product display shelf 20.
The control unit 201 of the store server 101 transmits reading instructions of the IC tag 10 of the electronic shelf label 103 to the IC tag reader 104 (step S1002).
The control unit 401 of the IC tag reader 104 transmits a resonant call-up signal to the IC tag 10 in response to reading instructions from the store server 101 (step S1003).
[0085]
The IC tag 10 of the electronic shelf label 103 receives the call-up signal and transmits a response signal (step S1004).
The control unit 401 of the IC tag reader 104 receives the response signal (step S1005), and reads the shelf label ID 311 stored in the memory of the IC tag 10 (step S1006).

The control unit 401 of the IC tag reader 104 transmits the read shelf label ID 311 and the sender ID to the store server 101 (step S1007).

[0086]

The control unit 201 of the store server 101 acquires, from the received sender ID, the shelf number 313 where the IC tag reader 104 is provided (step S1008), and associates the received shelf label ID 311 and the shelf number 313 (step S1009).

The control unit 201 stores the shelf label location information 320 of the electronic shelf label database 301 with the associated shelf label ID 311 and shelf number 313 (step S1010).

[0087]

The control unit 201 repeats the processes of step S1002 to step S1011 until reading is finished for all IC tag readers 104 ("No" in step S1011), and performs location recognition processing for all IC tag readers 104.

[0088]

Incidentally, with the present embodiment, the store server 101 sequentially transmitted reading instructions to each IC tag reader 104, but the store server 101 may deliver the reading instructions to all IC tag readers 104 at the same time by broadcast communication. Furthermore, each IC tag reader 104 may perform reading processes and transmission processes to the store server 101 at prescribed timing (for example, once per week, after taking inventory, and the like).

[0089]

Furthermore, the method of recognizing location information of a product performed using an electronic shelf label 103 having an IC tag 10 that stores a shelf label ID and an IC tag 11 that stores a shelf number will be described while referring to FIGS. 11 and 12. FIG. 11 is a diagram showing the appearance configuration of the electronic shelf label 103 (with integrated IC tag 10) and the IC tag 11. FIG. 12 is a flowchart depicting a procedure for performing location recognition processing of products using an electronic shelf label 103 (with integrated IC tag 10) and an IC tag 11.

[0090]

As depicted in FIG. 11, the electronic shelf label 103 is provided corresponding to each product 22 in front of the shelf part 21 of the product display shelf 20 displaying the product 22. The electronic shelf label 103 displays information (such as product price) related to the displayed product 22. The IC tag 10 that stores the shelf label ID 311 is integrated.

The IC tags 11-1, 11-2, … are provided on each shelf part 21-1, 21-2, … of the product display shelf 20, and store the respective shelf numbers 313 as location information.

The hand-held type IC tag reader 107 reads the IC tags 10 (shelf label ID 311 memory) of one or more electronic shelf labels 103 of each shelf part 21 of the product display shelf 20 and the IC tag 11 (shelf number 313 memory).

[0091]

As depicted in FIGS. 11 and 12, for example, the person in charge of the store manually holds the hand-held type IC tag reader 107 over each shelf part 21 (IC tags 10, 11) of the product display shelf 20 when confirming the location of the product (step S1201).

The control unit 401 of the IC tag reader 107 transmits a resonant call-up signal to the IC tags 10, 11 in response to reading instructions from the store server 101 (step S1202).

[0092]

The IC tag 10 of the electronic shelf label 103 and the IC tag 11 of the product display shelf receives the call-up signal and transmits a response signal (step S1203).

The control unit 401 of the IC tag reader 107 receives the response signal (step S1204) and collectively reads the shelf label ID 311 stored in the memory of the IC tag 10 and the shelf number 313 stored in the memory of the IC tag 11 (step S1205).

The control unit 401 of the IC tag reader 107 transmits the one or more shelf label ID 311 that was read and the shelf number 313 to the store server 101 (step S1206).

[0093]

The control unit 201 of the store server 101 associates the received one or more shelf label IDs 311 with the shelf number 313, and stores the shelf label location information 320 of the electronic shelf label database 301 (step S1207).

[0094]

The processes of step S1201 to step S1208 are repeated until reading is finished for all IC tags 10, 11 of the product display shelf 20 (“No” in step S1208), and location recognition processing is performed for all IC tag readers 107.

[0095]

Next, the processing procedure for presenting (displaying) the product information suitable for the information distributing means 112 of the store server 101, the light emission instructing means 113, the light emitting means 122 of the electronic shelf label 103, and the information presenting means 131 of the mobile information terminal 105, as well as the product location presentation (light emission) process will be described. FIG. 13 is a flowchart showing the processing procedure for presenting (displaying) product information and presenting (light emission) product location.

[0096]

As depicted in FIG. 13, the control unit 201 of the store server 101 distributes the location information (zone) of the shopping cart 106, the advertisement information 330 of the product based on the time, and the location indication information of the product to the mobile information terminal 105 provided on the shopping cart 106 of a shopper via the information distributing device 102, using the advertising information database 302 (step S1301). An example of the advertising information 330 of the product and the location indication information is "Today's special sale is OO. This product is depicted by a red light", or the like.

[0097]

The sales floor in the store is divided into a plurality of zones for customers who make purchases using the shopping carts 106. An information distributing device 102 is installed and a plurality of product display shelves 20 are placed in each zone. A zone refers to a contracting unit for the advertisement to be distributed, and the same advertising information is delivered to all mobile information terminals 105 provided on the shopping carts 106 existing in the same zone. For example, when a shopping cart 106 of a customer enters zone A, the advertising information 330 of a product displayed on a product display shelf 20 provided in zone A is delivered.

[0098]

Incidentally, the advertising information 330 is push information such as advertisements, pop-up content, and in-store information from advertisers/stores, and the like. In addition, the advertising information 330 is delivered based on the attribute information of the customer. For example, some information is distributed only to women in their 20s and 30s, and some information is distributed according to the number of purchasing points, and the like. Regarding the attribute information of the customer, when a customer enters the store and pushes the shopping cart 106 to make a purchase, for example, the customer information (attribute information) can be acquired by holding a customer card over the IC tag reader 506 of the portable information terminal 105 provided on the shopping cart 106.

[0099]

The control unit 501 of the mobile information terminal 105 displays the received advertising information 330 on the display unit 504 (step S1302).

[0100]

The control unit 201 of the store server 101 searches for and acquires the shelf label location information 320 of the product corresponding to the delivered advertising information 330 using the electronic shelf label database 301 (step S1303).

The control unit 201 transmits a light emission instruction to notify the electronic shelf label 103 corresponding to the shelf label ID 311 of the shelf label location information 320 of the product location based on the delivered advertising information 330 (step S1304).

[0101]

When the control unit 601 of the electronic shelf label 103 receives the light emission instruction (step S1305), an LED of the specified color is illuminated or flashed by the LED display unit 605 based on the light emission instruction (step S1306).

The control unit 601 turns off after a prescribed period of time (step S1307).

[0102]

Next, the procedures of the information acquiring process based on the location information of the product suitable for the information acquiring means 141 of the mobile information terminal 105, the reading means 142, and the information distributing means 112 of the store server 101 will be described. FIG. 14 is a flowchart depicting the procedure for the information acquiring process based on the location information of the product.

[0103]

As depicted in FIG. 14, the customer pushes the shopping cart 106 to make a purchase in the store. When acquiring the location of a product while moving, the handheld type IC tag reader 506 of the mobile information terminal 105 provided on the shopping cart 106 is held over the product display shelf 20 (step S1401).

The IC tag reader 506 of the mobile information terminal 105 transmits a resonant call-up signal to the IC tag 10 (step S1402).

[0104]

The IC tag 10 of the electronic shelf label 103 receives the call-up signal and transmits a response signal (step S1403).

The IC tag reader 506 receives a response signal from the IC tags 10 of the surrounding electronic shelf labels 103 (step S1404), and collectively reads the shelf label IDs 311 stored in the memories of the IC tags 10 (step S1405). The IC tag reader 506 normally enables reading of the IC tags 10 in the range of a one-third part of the product display shelf 20.

The control unit 501 of the mobile information terminal 105 transmits the 1 or more shelf label IDs 311 that were read to the store server 101 (step S1406).

[0105]

The control unit 201 of the store server 101 extracts the associated product information 312 and shelf number 313 from the one or more shelf label IDs 311 that were received using the electronic shelf label database 301 (step S1407).

The control unit 201 transmits the associated product information 312 and the shelf number 313 to the mobile information terminal 105 of the transmission source (step S1408).

Furthermore, the control unit 201 transmits advertising information 330 corresponding to the product information (product ID) to be associated (step S1409).

[0106]

The control unit 501 of the mobile information terminal 105 displays the associated product information 312 and the shelf number 313 (step S1410).

Furthermore, the control unit 501 displays the received advertising information 330 (step S1411).

[0107]

As described above, with the embodiment of the present invention, the store server 101 includes: location information recognizing means 111 that identifies the shelf number that is the location information of the IC tag reader from the sender ID received from the IC tag reader 104 and one or more electronic shelf label IDs, associates the shelf number with the one or more electronic shelf label IDs, and registers and stores the shelf label location information that specifies the location of the product in the electronic shelf label database 301, information distributing means 112 for distributing advertising information about products to the mobile information terminal 105 and for transmitting information related to products associated with one or more shelf label IDs 311 read from the mobile information terminal 105, and light emission instructing means 113 that extracts the electronic shelf label information associated with the product of the advertising information delivered by the information distributing means 112, and transmits the light emission instructions to the electronic shelf label; the electronic shelf label 103 includes an integrated IC tag 10 that stores the shelf label ID, product information presenting means 121 that displays information (pricing and the like) about products received by wireless communication from the store server 101 via the information distributing device 102, and light emitting means 122 that causes an LED light emitter to emit light in response to light emission instructions received from the store server 101; the IC tag reader 104 is installed on each shelf part forming the product display shelf 20, and includes reading means 131 for collectively reading the shelf label IDs to be stored in the IC tag 10 providing one or more electronic shelf labels 103 installed on the shelf part, and a read information transmitting means 132; and the mobile information terminal 105 includes reading means 142 that reads the shelf label ID stored in the IC tag 10 of the nearby electronic shelf label 103 using a portable IC tag reader provided on the mobile information terminal 105 and transmits the information to the store server 101, and information presenting means that presents a customer with advertising information for a product transmitted from the store server 101 via the information distributing device102, and information related to a product based on the shelf label ID that was read.

[0108]
As a result, it is possible to automatically recognize the location of each product in a store, and furthermore, it is possible to inform the location of the product by causing light emission by the electronic shelf label of the product corresponding to the product information provided to the mobile information terminal 105. By the collaboration between the electronic shelf label 103 and the mobile information terminal 105, it is possible for the customer to easily locate the product, and thus a collaborative system of electronic shelf label and mobile information terminal that allows easy shopping is provided, and an effective sales promotion effect with regards to the customer is provided.
Furthermore, regarding the person in charge of the store, the ability to automatically locate a plurality of items in the store has an effect of reducing the burden on the person in charge of product management.
[0109]
Incidentally, with the present embodiment, the store server 101 sequentially transmitted reading instructions to each IC tag reader 104, but the store server 101 may deliver the reading instructions to all IC tag readers 104 at the same time by broadcast communication. Furthermore, each IC tag reader 104 may perform reading processes and transmission processes to the store server 101 at prescribed timing (for example, once per week, after taking inventory, and the like).
Furthermore, in the present embodiment, the hand-held type IC tag reader 107 sequentially transmits the shelf label ID, the shelf number, and the like, manually read from the IC tag to the store server 101, but the information may be stored in the storage unit of the IC tag reader 107 in order to recognize the location of the product.
[0110]
Furthermore, in the present embodiment, IC tags 10, 11 are used as a mechanically identifiable information storage medium, and IC tag readers 104, 107, 506 are used as the reading device thereof. However, information may be collected by using a barcode reader as the reading device, by preparing a one-dimensional barcode or a two-dimensional barcode (QR code, PDF 417, DataMatrix, Maxicode, or the like) for an electronic shelf label 103 or a shelf part 21.
[0111]
Note, the program for performing the processing illustrated in FIG. 10, and FIG. 12 to FIG. 14 and the like may be retained in storing media such as a CD-ROM or the like and distributed, or this program may be transmitted and received via a communication line.
[0112]
Although the preferred embodiments of the collaborative system of electronic shelf label and mobile information terminal and the like according to the present invention have been described above with reference to the accompanying drawings, the present invention is not limited to such examples. It is clear that a person of ordinary skill in the art could conceive of various modifications or revisions within the scope set forth by the claims, and these modifications or revisions would be understood to belong to the technical scope of the present invention.
BRIEF DESCRIPTION OF THE DRAWINGS
[0113]
FIG. 1 is a diagram depicting a schematic configuration of the electronic shelf label and mobile information terminal linking system 100 according to the present embodiment.
FIG. 2 is a hardware configuration diagram of the store server 101.
FIG. 3 is a diagram depicting information stored by the storage unit 202.
FIG. 4 is a diagram depicting the appearance configuration of the electronic shelf labels 103 and IC tag reader 104.
FIG. 5 is an appearance diagram of the electronic shelf label 103
FIG. 6 is a hardware configuration diagram of the electronic shelf label 103
FIG. 7 is a hardware configuration diagram of the IC tag reader 104

FIG. 8 is a diagram depicting the appearance of the shopping cart 106
FIG. 9 is a diagram depicting the hardware configuration of the mobile information terminal 105
FIG. 10 is a flowchart depicting a procedure for performing location recognition processing of products using an electronic shelf label 103 (integrated IC tag 10).
FIG. 11 is a diagram showing the appearance configuration of the electronic shelf label 103 (integrated IC tag 10) and the IC tag 11.
FIG. 12 is a flowchart depicting a procedure for performing location recognition processing of products using an electronic shelf label 103 (integrated IC tag 10) and an IC tag 11.
FIG. 13 is a flowchart showing the processing procedure for presenting (displaying) product information and presenting (light emission) product location.
FIG. 14 is a flowchart depicting the processing procedure for obtaining the location information of products.
DESCRIPTION OF SYMBOLS
[0114]
100. Collaborative system for electronic shelf label and mobile information terminal
101. Store server
102. Information distributing device
103. Electronic shelf label
104, 107, 506. IC Tag Reader
105. Mobile information terminal
106. Shopping cart
109. Network
111. Location information recognizing means
112. Information distributing means
113. Light emission instructing means
121. Product information presenting means
122. Light emitting means
131. Reading means
132. Read information transmitting means
141. Information presenting means
142. Reading means
201, 401, 501, 601. Control unit
202, 402, 502. Storage unit
301. Electronic shelf label database
302. Advertising information database
310. Shelf label product information
311. Shelf label ID
312. Product information
313. Shelf number
320. Shelf label location information
330. Advertising information
10, 11. IC Tag
20. Product display shelf
21. Shelf part
22. Product

[FIG. 1]

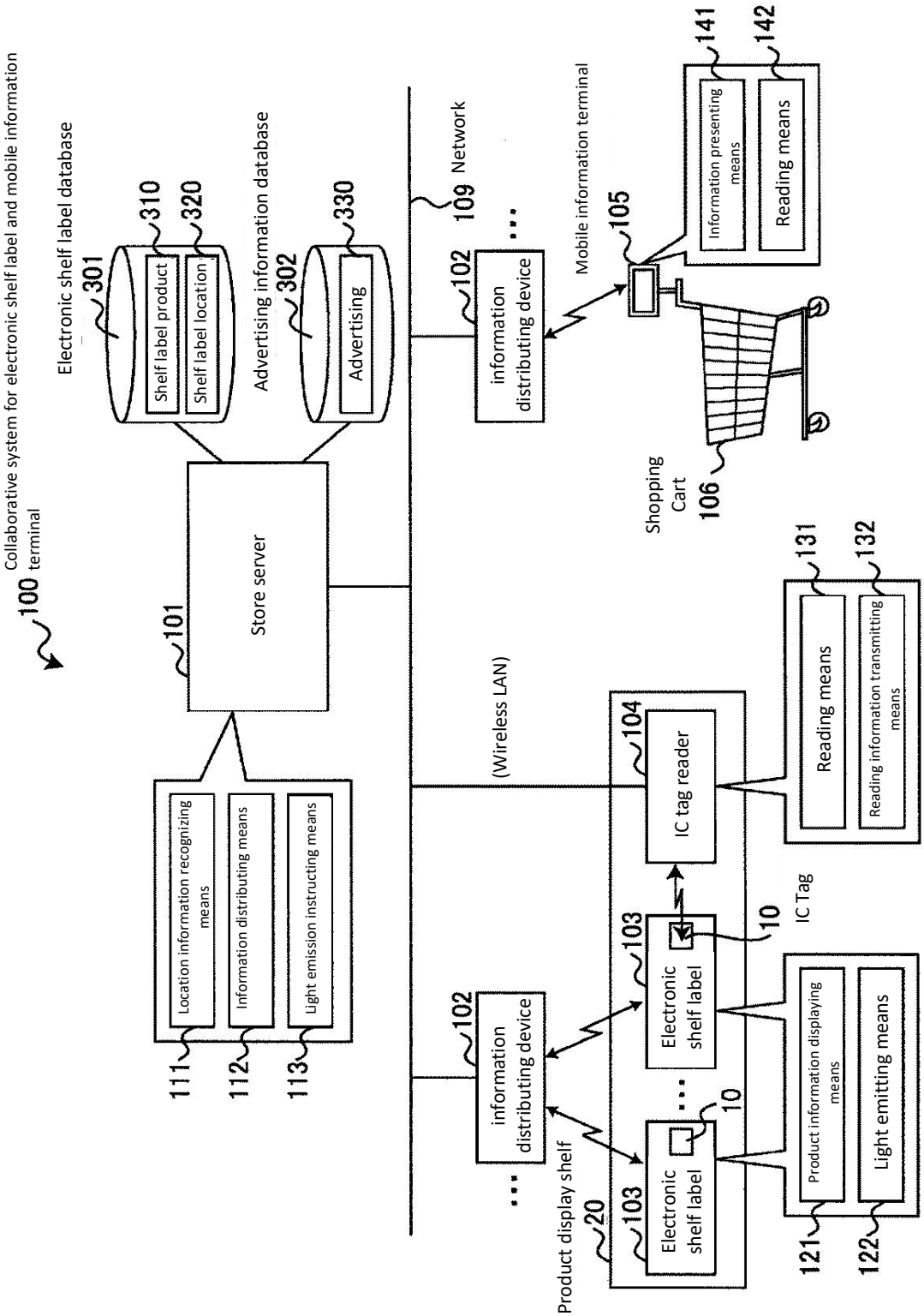
Collaborative system for electronic shelf label and mobile information terminal
100
Electronic shelf label database
301
310
Shelf label product
320
Shelf label location
Advertising information database
302
330
Advertising
Store server
101
Location information recognizing means
Information distributing means
Light emission instructing means
111
112
113
Network
109
information distributing device
102
...
Mobile information terminal
105
Shopping Cart
106
Information presenting means
141
Reading means
142
(Wireless LAN)
IC tag reader
104
Reading means
131
Reading information transmitting means
132
IC Tag
10
Electronic shelf label
103
Product display shelf
20
Product information displaying means
121
Light emitting means
122

[FIG. 2]

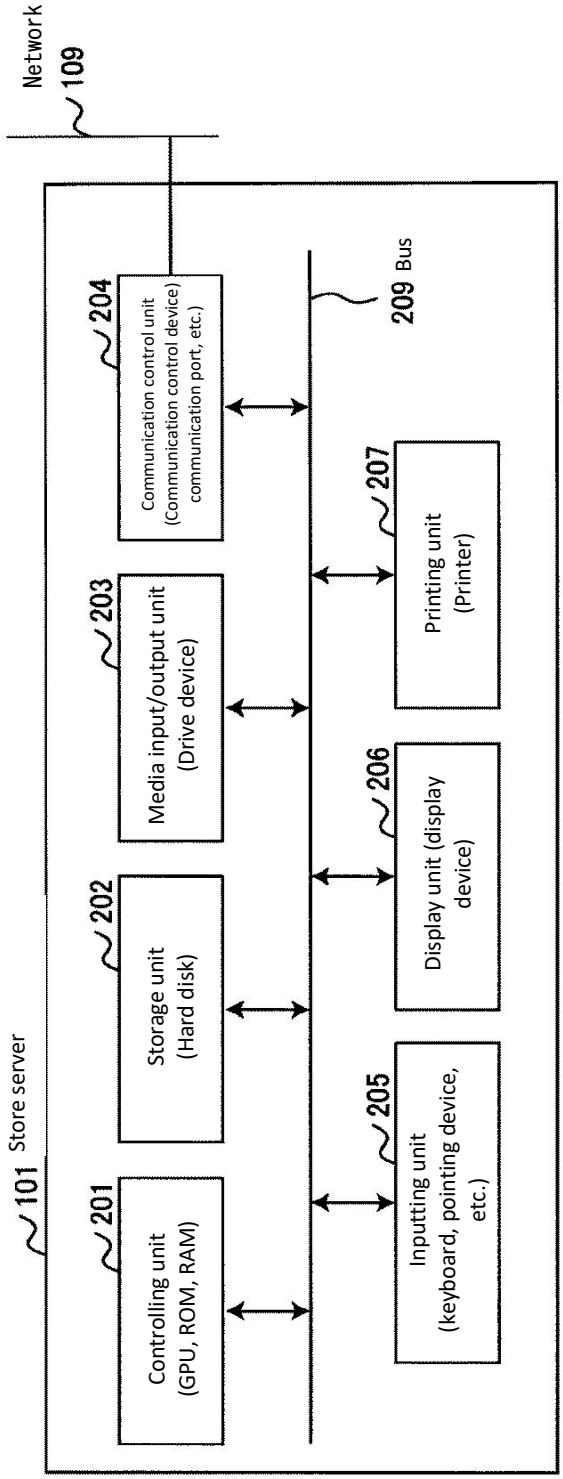
Network
109
Store server
101
201
Controlling unit
(GPU, ROM, RAM)
202
Storage unit
(Hard disk)
203
Media input/output unit
(Drive device)
204
Communication control unit
(Communication control device)
communication port, etc.)
205
Inputting unit
(keyboard, pointing device,
etc.)
206
Display unit (display
device)
207
Printing unit
(Printer)
209 Bus

[FIG. 3]

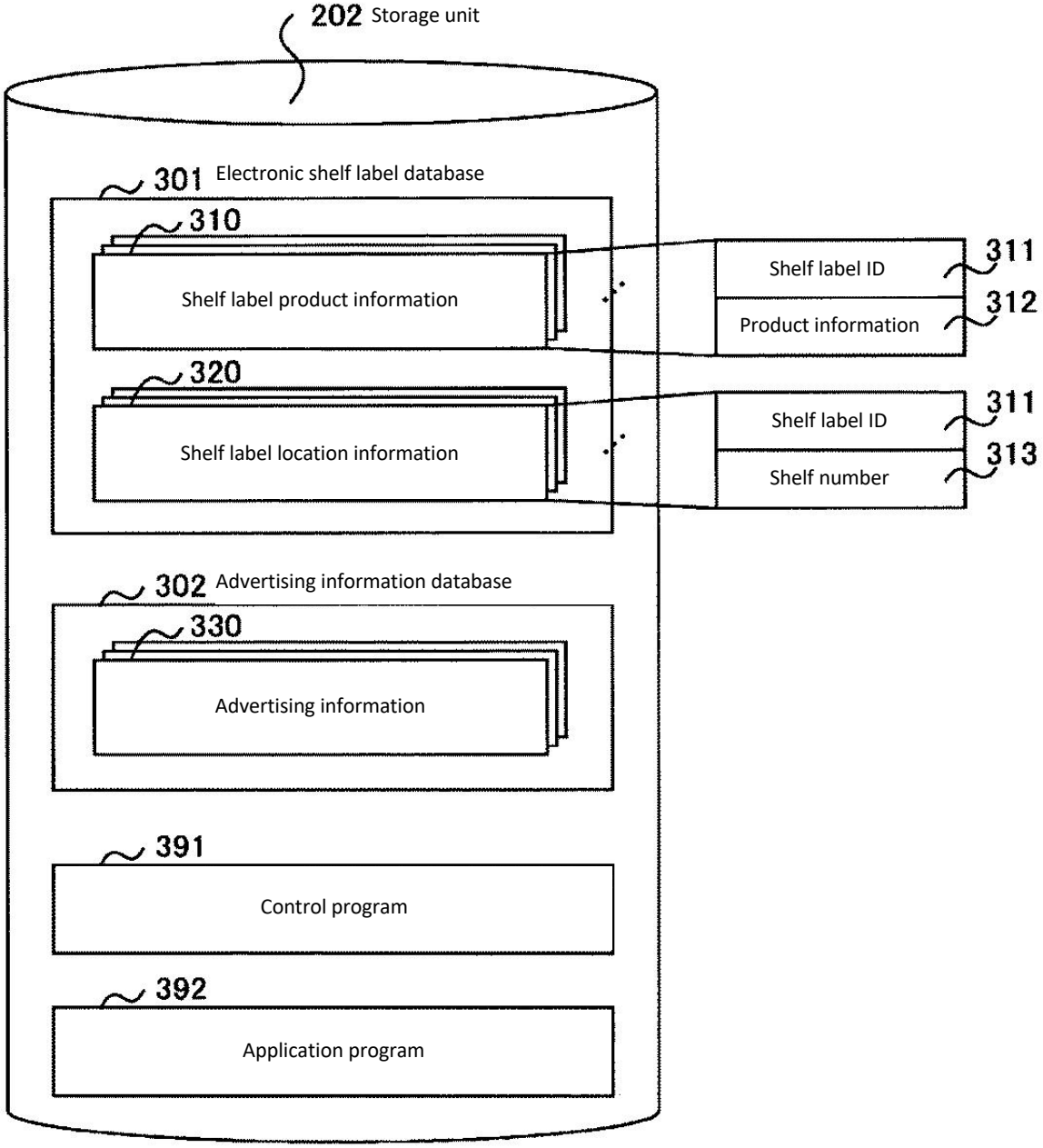
202 Storage unit
301 Electronic shelf label database
310
Shelf label product information
Shelf label ID
311
Product information
312
320
Shelf label location information
Shelf label ID
311
Shelf number
313
302 Advertising information database
330
Advertising information
391
Control program
392
Application program

[FIG. 4]

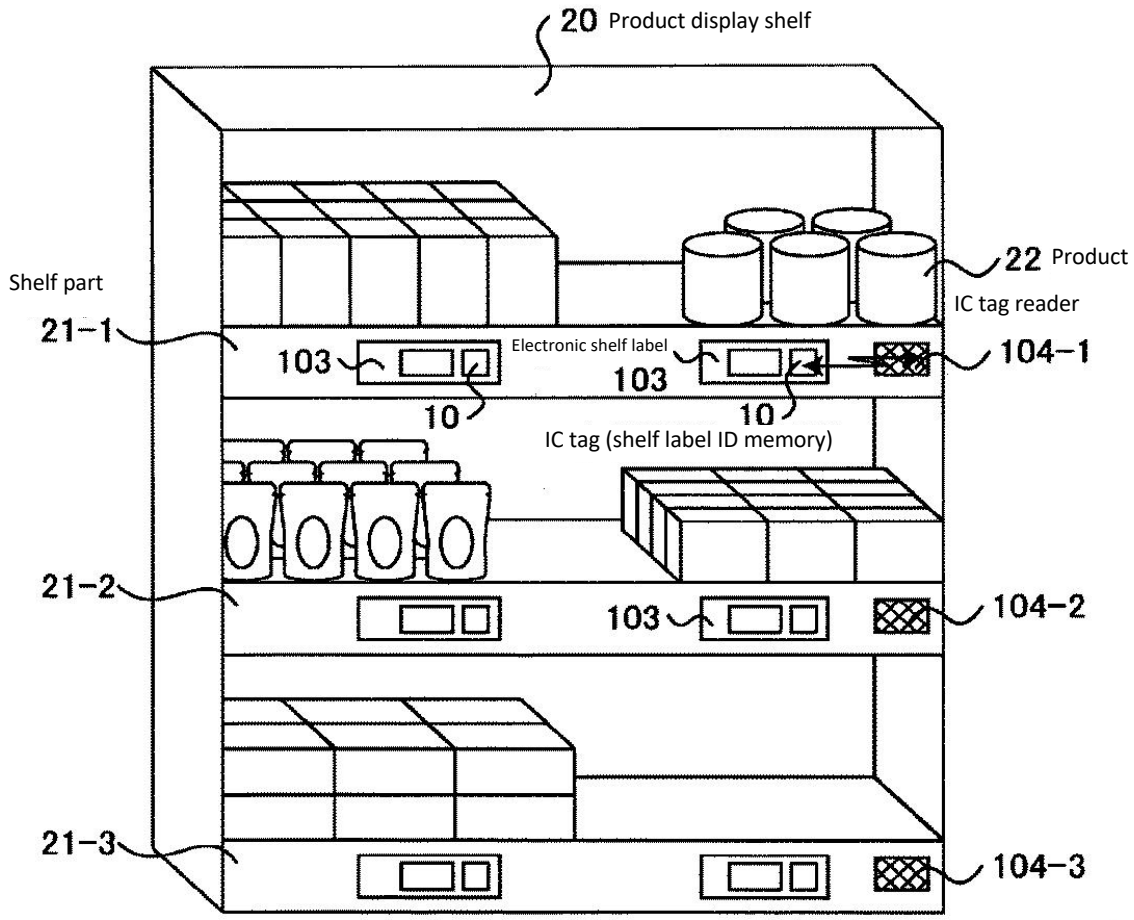
20 Product display shelf
22 Product
IC tag reader
Shelf part
21-1
103
Electronic shelf label
103
104-1
10
10
IC tag (shelf label ID memory)
21-2
103
104-2
21-3
104-3

[FIG. 5]

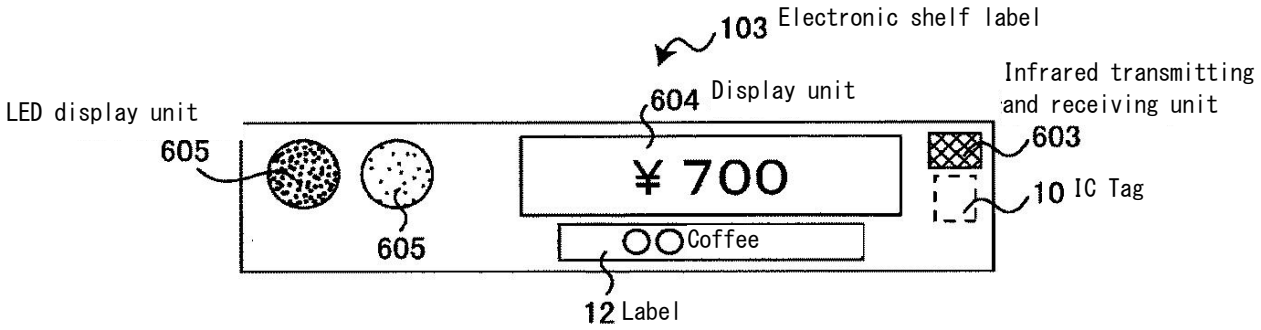
103 Electronic shelf label
Infrared transmitting and receiving unit
LED display unit
604 Display unit
605
603
¥ 700
10 IC Tag
605
Coffee
12 Label

[FIG. 6]

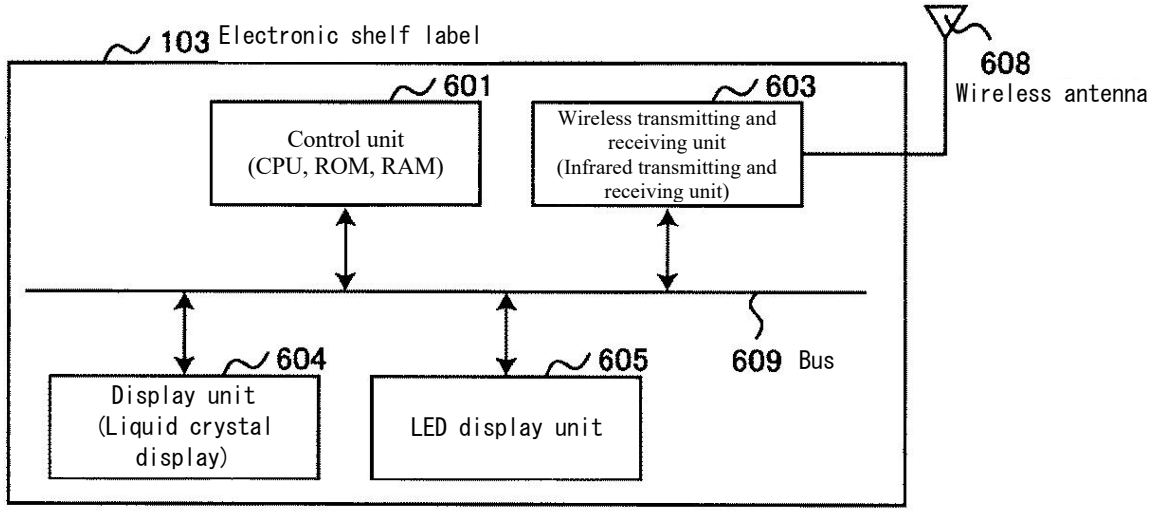
103 Electronic shelf label
601
Control unit
(CPU, ROM, RAM)
603
Wireless transmitting and receiving unit
(Infrared transmitting and receiving unit)
608
Wireless antenna
604
Display unit
(Liquid crystal display)
605
LED display unit
609 Bus

[FIG. 7]

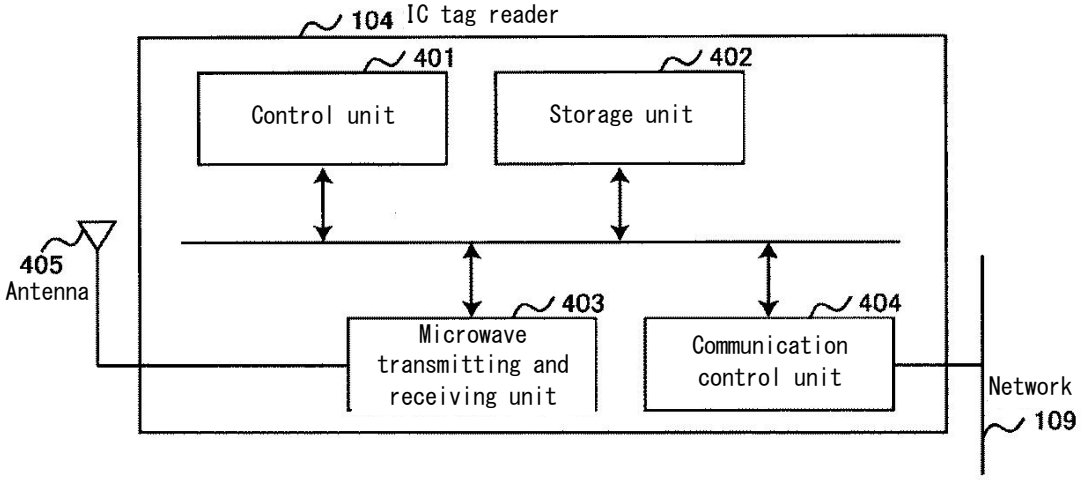
104 IC tag reader
401
Control unit
402
Storage unit
405
Antenna
403
Microwave transmitting and receiving unit
404
Communication control unit
Network
109

[FIG. 8]

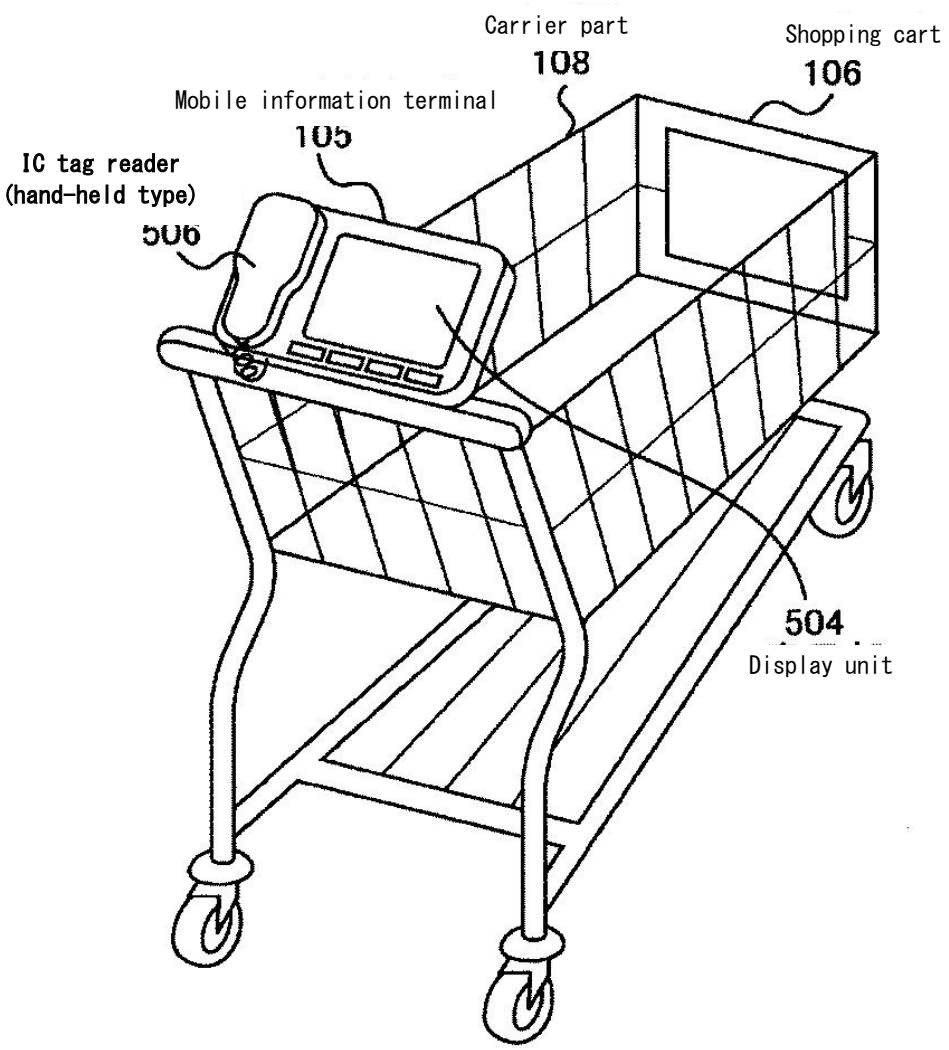
Carrier part
108
Shopping cart
106
Mobile information terminal
105
IC tag reader
(hand-held type)
506
504
Display unit

[FIG. 9]

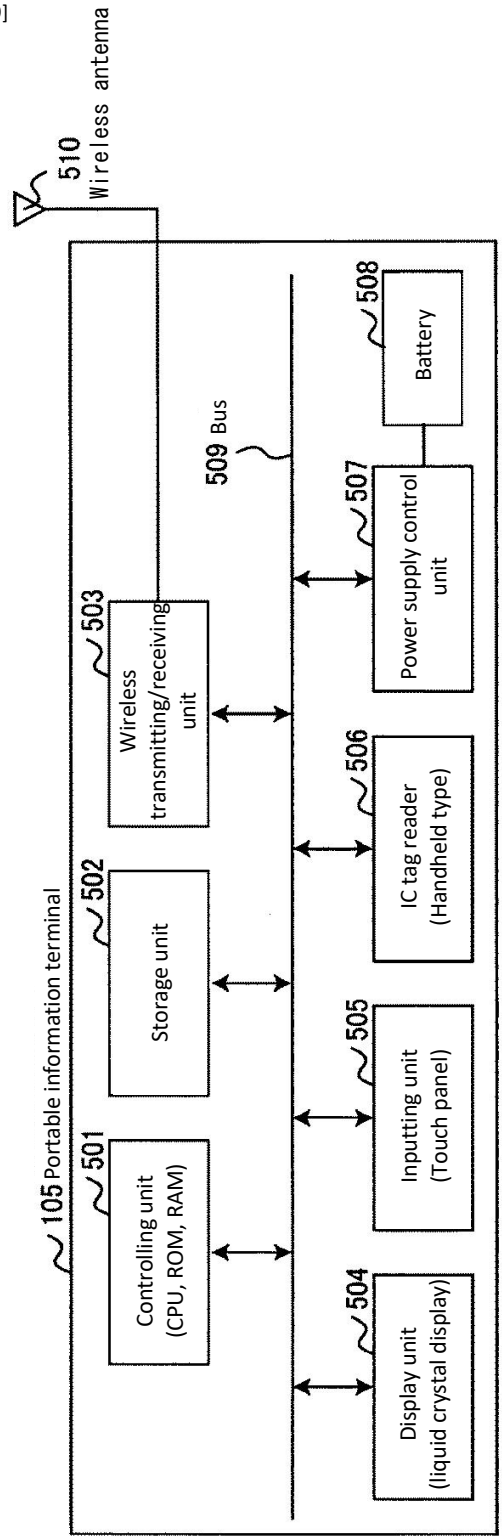
105 Portable information terminal
501
Controlling unit
(CPU, ROM, RAM)
502
Storage unit
503
Wireless
transmitting/receiving
unit
510
Wireless antenna
509 Bus
504
Display unit
(liquid crystal display)
505
Inputting unit
(Touch panel)
506
IC tag reader
(Handheld type)
507
Power supply control
unit
508
Battery

[FIG. 10]

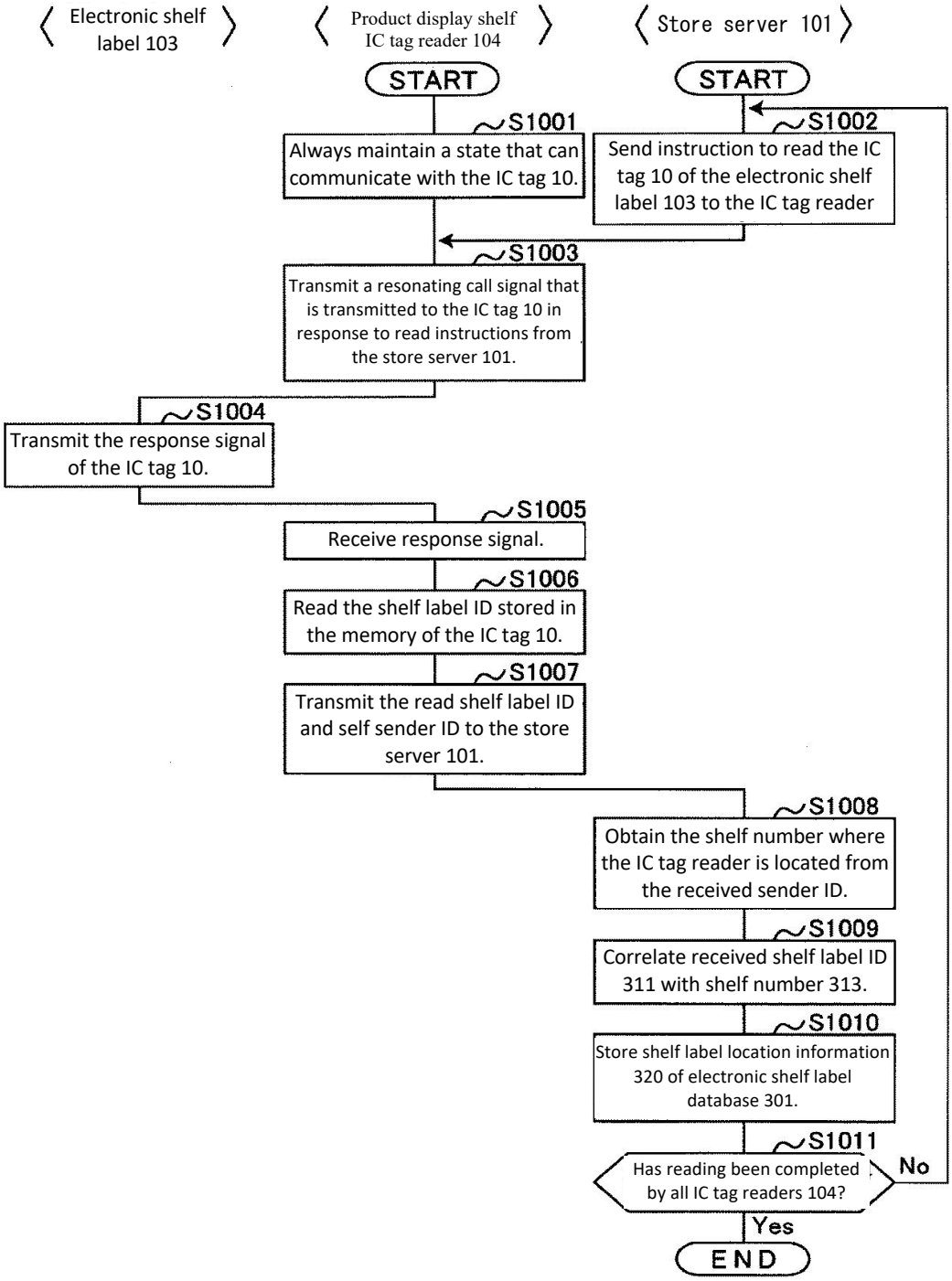
Electronic shelf label 103
Product display shelf IC tag reader 104
Store server 101
START
START
S1001
Always maintain a state that can communicate with the IC tag 10.
S1002
Send instruction to read the IC tag 10 of the electronic shelf label 103 to the IC tag reader
S1003
Transmit a resonating call signal that is transmitted to the IC tag 10 in response to read instructions from the store server 101.
S1004
Transmit the response signal of the IC tag 10.
S1005
Receive response signal.
S1006
Read the shelf label ID stored in the memory of the IC tag 10.
S1007
Transmit the read shelf label ID and self sender ID to the store server 101.
S1008
Obtain the shelf number where the IC tag reader is located from the received sender ID.
S1009
Correlate received shelf label ID 311 with shelf number 313.
S1010
Store shelf label location information 320 of electronic shelf label database 301.
S1011
Has reading been completed by all IC tag readers 104?
No
Yes
END

[FIG. 11]

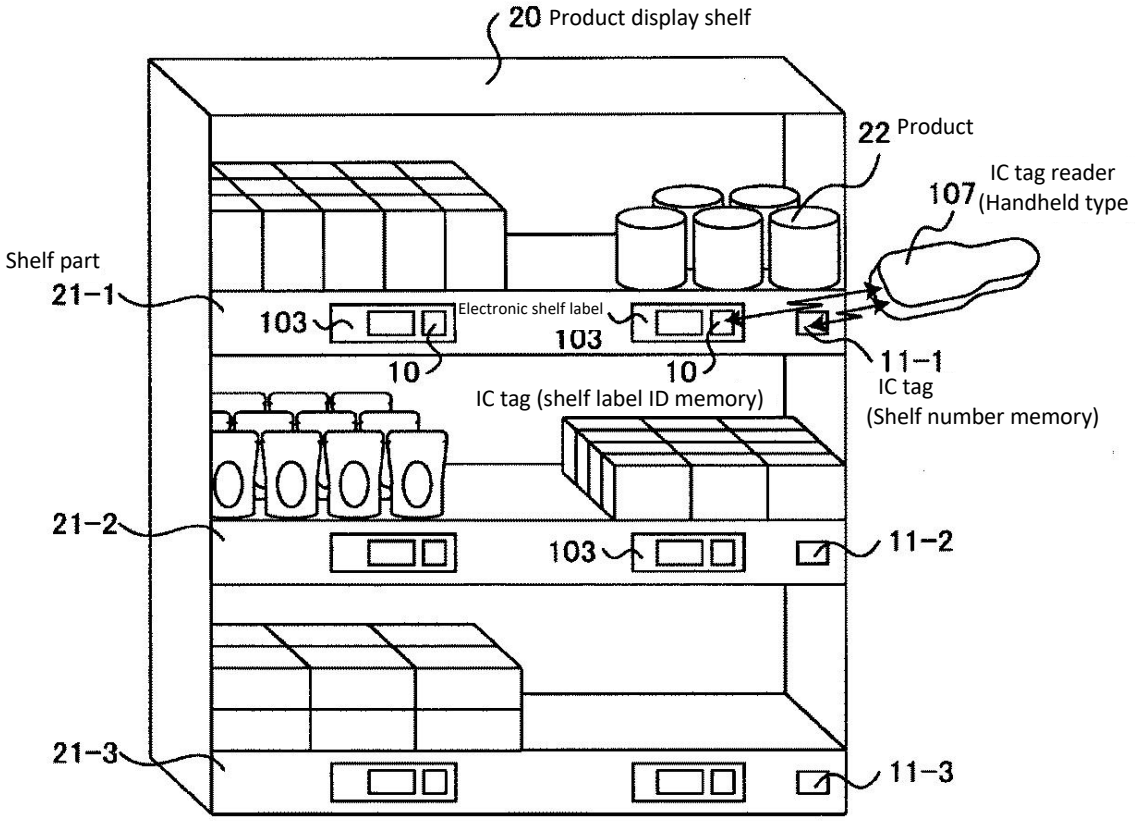
20 Product display shelf
22 Product
IC tag reader
107 (Handheld type
Shelf part
21-1
103
Electronic shelf label
103
10
10
11-1
IC tag
(Shelf number memory)
IC tag (shelf label ID memory)
21-2
103
11-2
21-3
11-3

[FIG. 12]

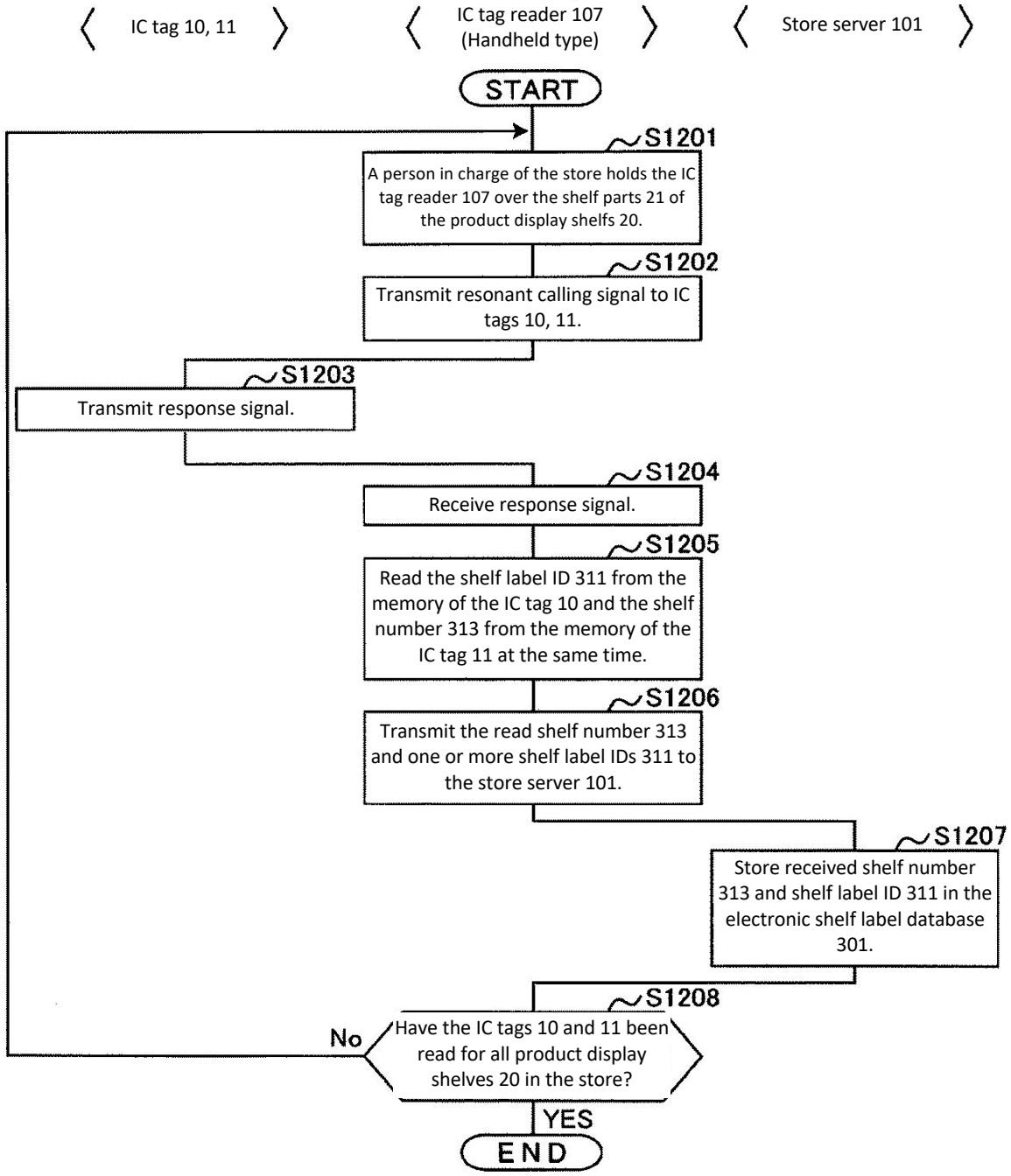
IC tag 10, 11
IC tag reader 107 (Handheld type)
Store server 101
START
S1201
A person in charge of the store holds the IC tag reader 107 over the shelf parts 21 of the product display shelfs 20.
S1202
Transmit resonant calling signal to IC tags 10, 11.
S1203
Transmit response signal.
S1204
Receive response signal.
S1205
Read the shelf label ID 311 from the memory of the IC tag 10 and the shelf number 313 from the memory of the IC tag 11 at the same time.
S1206
Transmit the read shelf number 313 and one or more shelf label IDs 311 to the store server 101.
S1207
Store received shelf number 313 and shelf label ID 311 in the electronic shelf label database 301.
S1208
Have the IC tags 10 and 11 been read for all product display shelves 20 in the store?
No
YES
END

[FIG. 13]

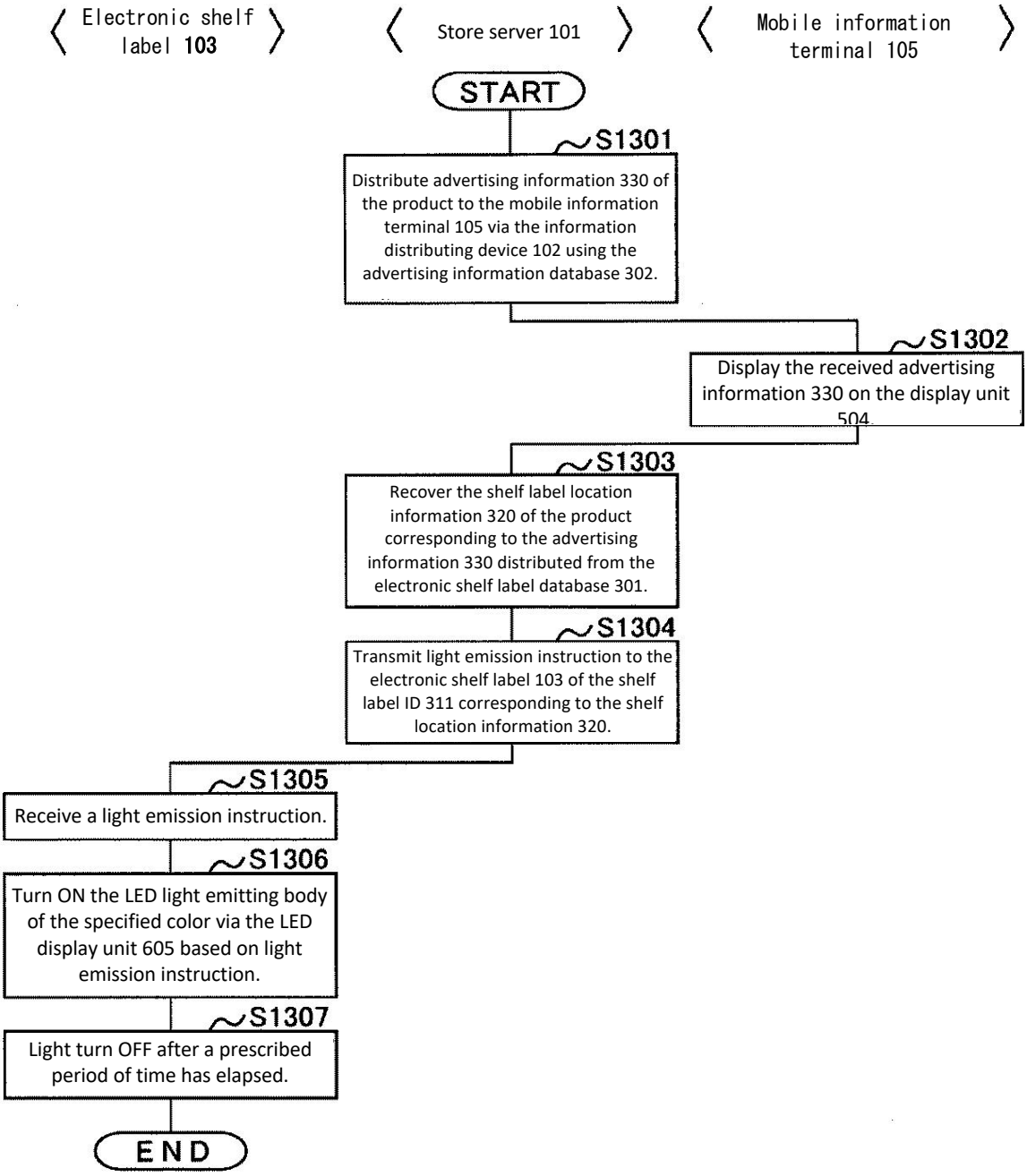
Electronic shelf label 103
Store server 101
Mobile information terminal 105
START
S1301
Distribute advertising information 330 of the product to the mobile information terminal 105 via the information distributing device 102 using the advertising information database 302.
S1302
Display the received advertising information 330 on the display unit 504.
S1303
Recover the shelf label location information 320 of the product corresponding to the advertising information 330 distributed from the electronic shelf label database 301.
S1304
Transmit light emission instruction to the electronic shelf label 103 of the shelf label ID 311 corresponding to the shelf location information 320.
S1305
Receive a light emission instruction.
S1306
Turn ON the LED light emitting body of the specified color via the LED display unit 605 based on light emission instruction.
S1307
Light turn OFF after a prescribed period of time has elapsed.
END

[FIG. 14]

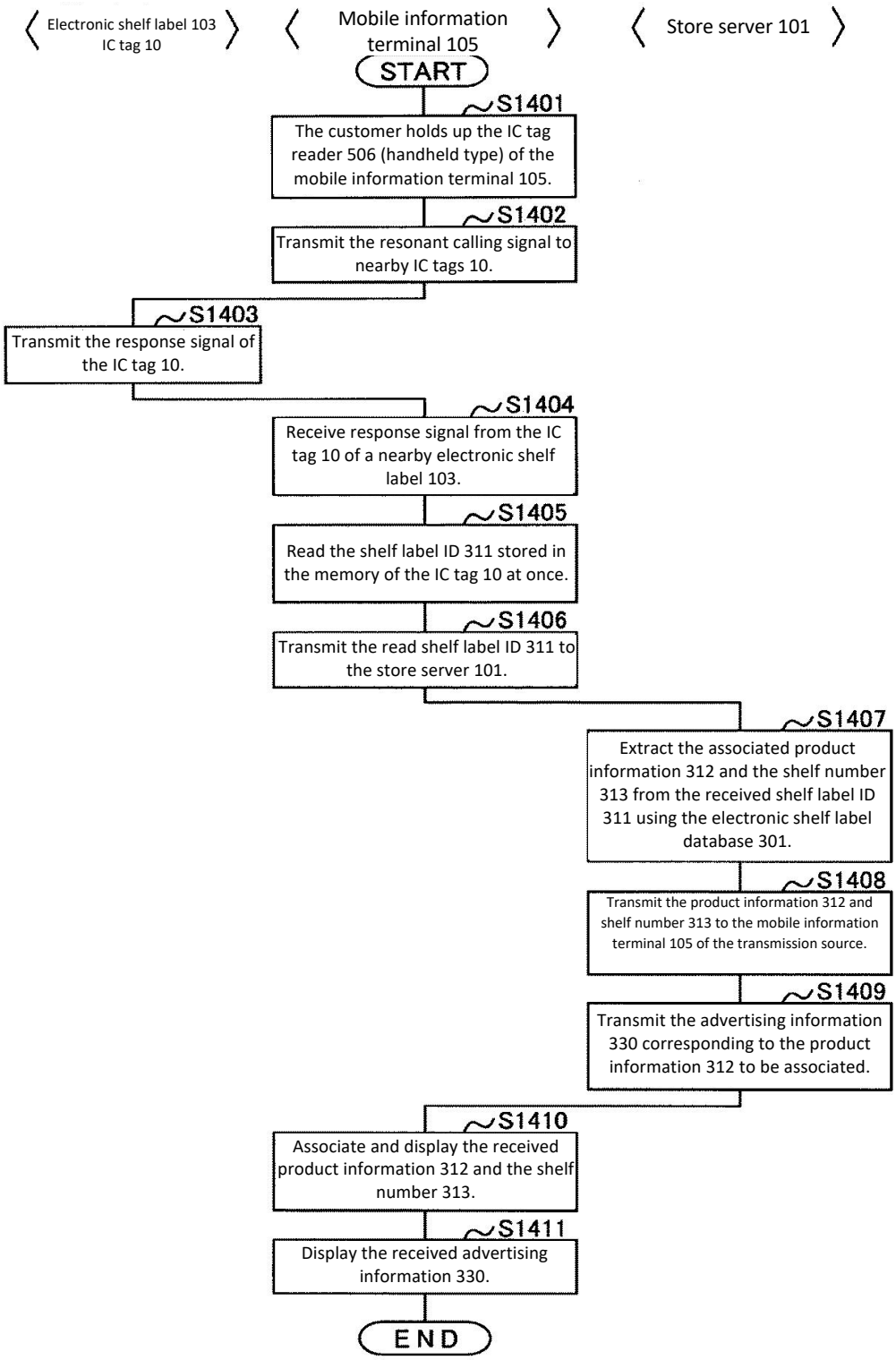
Electronic shelf label 103
IC tag 10
Mobile information terminal 105
Store server 101
START
S1401
The customer holds up the IC tag reader 506 (handheld type) of the mobile information terminal 105.
S1402
Transmit the resonant calling signal to nearby IC tags 10.
S1403
Transmit the response signal of the IC tag 10.
S1404
Receive response signal from the IC tag 10 of a nearby electronic shelf label 103.
S1405
Read the shelf label ID 311 stored in the memory of the IC tag 10 at once.
S1406
Transmit the read shelf label ID 311 to the store server 101.
S1407
Extract the associated product information 312 and the shelf number 313 from the received shelf label ID 311 using the electronic shelf label database 301.
S1408
Transmit the product information 312 and shelf number 313 to the mobile information terminal 105 of the transmission source.
S1409
Transmit the advertising information 330 corresponding to the product information 312 to be associated.
S1410
Associate and display the received product information 312 and the shelf number 313.
S1411
Display the received advertising information 330.
END

Continued from front page

(51) Int.Cl.			FI		Theme code (reference)
GO6K	7/00	***(2006.01)***	G06K 17/00	F	
			G06K 17/00	L	
			G06K 7/00	U	