TEREX

TECH TIPS

TROUBLESHOOTING J1939 CONNECTOR

NO. 87

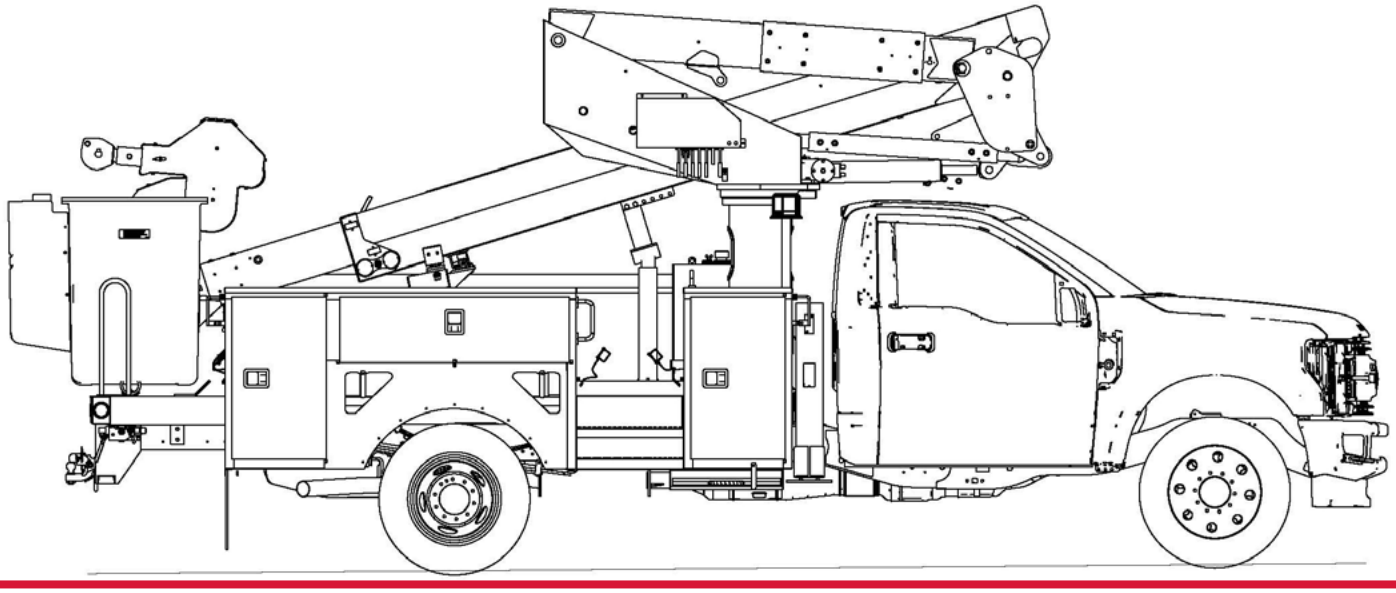

SERVICE CALL:
TROUBLESHOOTING J1939 CONNECTOR

MODEL(S):
TEREX MODELS USING J1939 CONNECTORS

TOOLS NEEDED:
DIGITAL MULTIMETER

TEREX UTILITIES TECHNICAL SUPPORT TEAM
PHONE: 1-844-TEREX4U (1-844-837-3948) | **EMAIL:** UTILITIES.SERVICE@TEREX.COM

EXHIBIT 1033

DANGER

Failure to obey the instructions and safety rules in the appropriate Operator's Manual and Service Manual for your machine will result in death or serious injury.

Many of the hazards identified in the Operator's Manual are also safety hazards when maintenance and repair procedures are performed.

DO NOT PERFORM MAINTENANCE UNLESS:

√ You are trained and qualified to perform maintenance on this machine.

√ You read, understand and obey:

- manufacturer's instructions and safety rules
- employer's safety rules and worksite regulations
- applicable governmental regulations

√ You have the appropriate tools, lifting equipment and a suitable workshop.

The information contained in this Tech Tip is a supplement to the Service Manual. Consult the appropriate Service Manual of your machine for safety rules and hazards.

TEREX

TECH TIP 87 | RELEASED 09.21.2022 | VERSION 1.0
©TEREX UTILITIES. ALL RIGHTS RESERVED

EXHIBIT 1033

CONTENTS

TECH TIP#87

TOC

4 | *J1939*
INTRODUCTION

5 | *Troubleshooting*
STEP 1

6 | *Voltage*
STEP 2

EXHIBIT 1033

INTRODUCTION

This Tech-tip will guide you through checking the resistance and voltage in the J1939 datalink. J1939 is a high-speed vehicle data link that can communicate at either 250kb/s or 500kb/s. The datalink consists of three wires: yellow is CAN +, green is CAN - and Shield is connected to ground.

Note: Black connecter primary CAN is 250K, the green connector primary CAN is 500K. **Figure 2**

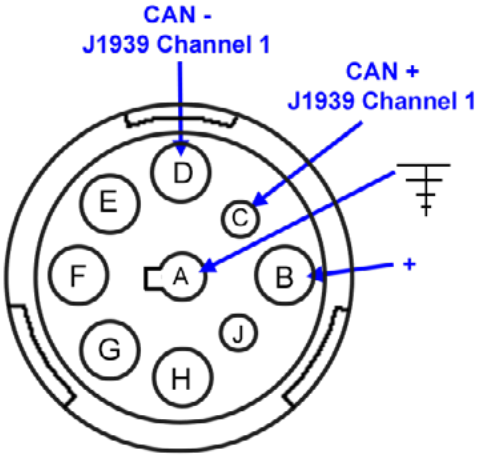

FIGURE 1

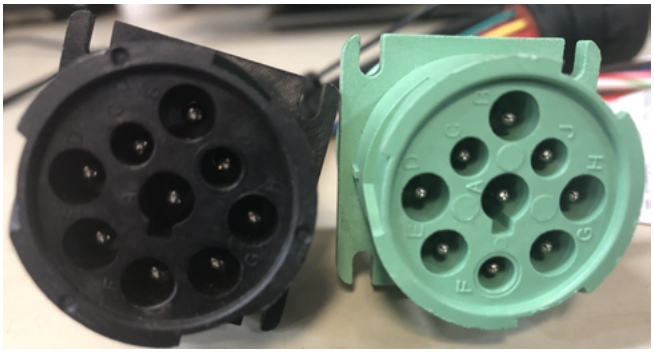

FIGURE 2

Two 120 Ω resistors are required to complete the J1939 network topology.

Note: It is important to use twisted pair wires to evenly distribute electrical static between CAN + and CAN -.

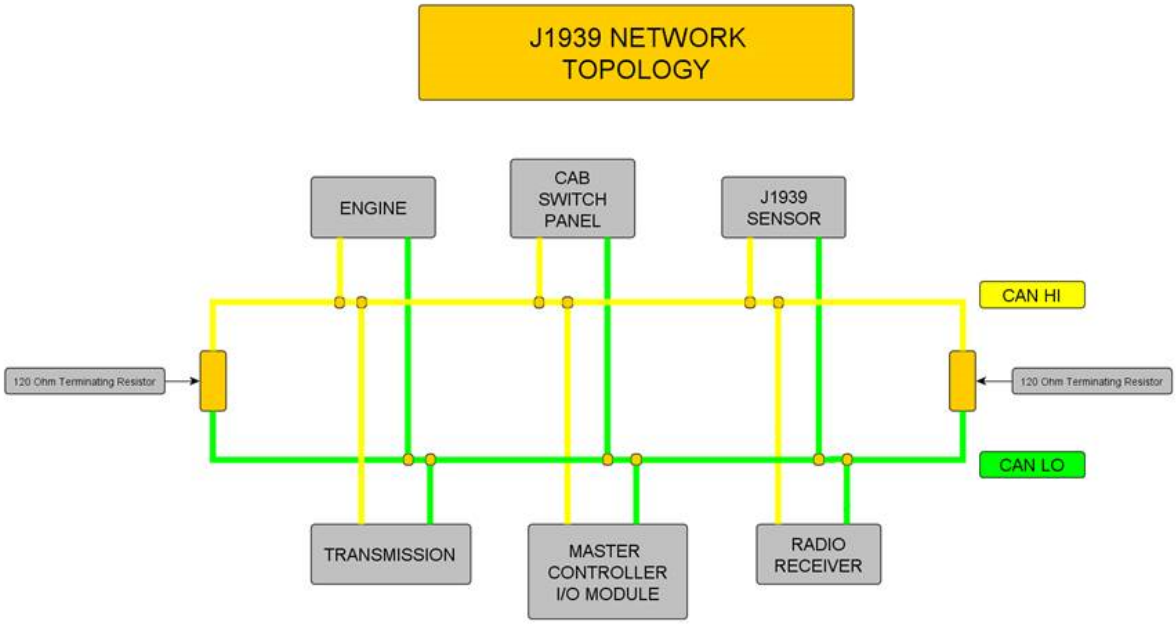

EXHIBIT 1033

STEP 1

Turn the ignition key off and disconnect the batteries. Set the multimeter to ohms and place the leads between CAN + (Pin C) and CAN - (Pin D).

Use the table below to evaluate and troubleshoot the datalink as directed.

60Ω ± 6Ω	The J1939 datalink is good. Go to step 2.
120Ω ± 12Ω	• One of the terminating resisters is missing. • One of the terminating resisters is open. • Open circuit between the termination resisters.
40Ω ± 4Ω	Three Terminating resisters have been installed. One must be removed.
0Ω to 5Ω	CAN + and CAN - are shorted within the system
> 1000 Ω	• Most likely cause is an open circuit between the diagnostic connector and the J1939 backbone. • Both terminating resisters are open or missing.
Any Other Reading	• Incorrect terminating resister resistance. • Poor or corroded connections. • Short circuit to ground or open circuit in the datalink.

EXHIBIT 1033

STEP 2

CAN + and CAN - will be tested separately. Turn the ignition key ON and put one test lead on ground and the other lead on CAN + (Pin C) or CAN - (Pin D).

Use the following table to determine if CAN + and CAN - have the correct voltage.

If it is confirmed that the J1939 circuit is in fault, it must be taken to an authorized dealership for repairs.

0VDC	J1939 is shorted to Power
12VDC	J1939 Is shorted to Ground
2.5-3.0VDC	1939+ is working correctly
2.5-1.5VDC	J1939- is working correctly
Any Other Reading	May be an issue with the vehicle to computer interface. The datalink itself appears ok.

EXHIBIT 1033

TEREX®

FOR FURTHER ASSISTANCE,
CONTACT THE TEREX UTILITIES TECHNICAL SUPPORT TEAM
PHONE: 1-844-TEREX4U (1-844-837-3948) | EMAIL: UTILITIES.SERVICE@TEREX.COM