IN THE UNITED STATES DISTRICT COURT
FOR THE NORTHERN DISTRICT OF TEXAS
DALLAS DIVISION

MULTIQUIP INC.,	§	
	§	
Multiquip,	§	
	§	
v.	§	
	§	**CIVIL ACTION NO. 3:22-cv-2599**
ANA, INC.,	§	
	§	**JURY TRIAL DEMANDED**
ANA.	§	
	§	
	§	

ORIGINAL COMPLAINT FOR PATENT INFRINGEMENT

Multiquip Inc. ("Multiquip"), by and through its attorneys, files this Complaint for Patent Infringement against ANA, Inc. ("ANA") and alleges:

NATURE OF THE ACTION

1. This action arises under the patent laws of the United States, 35 U.S.C. §§ 1, *et seq.*, in which Multiquip asserts that ANA infringes U.S. Patent 8,816,651 ("the '651 Patent" or "Asserted Patent"). Multiquip files this action to stop ANA's willful infringement of the Asserted Patent.

THE PARTIES

2. Multiquip is a corporation organized and existing under the laws of California, with its principal place of business at 6141 Katella Avenue, Suite 200, Cypress, CA 90630. Multiquip was founded in 1973 and is a leading manufacturer and worldwide supplier of products for the construction, industrial, aerospace, entertainment, and oil & gas exploration markets, among others. Multiquip's products include a line of 70 kVA to 600 kVA diesel-driven power generators

equipped with PowerBalance™ technology protected by and marked with U.S. Patent 8,816,651 (the '651 Patent).

3. ANA is a corporation organized and existing under the laws of Delaware that maintains a regularly established place of business at 10440 Brockwood Road Dallas, TX 75338.

JURISDICTION AND VENUE

4. This Court has subject matter jurisdiction over Multiquip's patent infringement claims pursuant to 28 U.S.C. §§ 1331 (federal question) and 1338 (action arising under an Act of Congress relating to patents) because this action arises under the Patent Laws of the United States, Title 35 of the United States Code.

5. This Court has specific and general personal jurisdiction over ANA pursuant to due process and/or the Texas Long Arm Statute because ANA has committed acts giving rise to this action within Texas and within this judicial district. The Court's exercise of jurisdiction over ANA would not offend traditional notions of fair play and substantial justice because ANA has established minimum contacts with the forum. On information and belief, ANA has committed acts of infringement in this judicial district, by among other things, selling and offering for sale products that infringe the asserted patent, directly or through intermediaries, as alleged herein. As a nonlimiting example, on information and belief, ANA directs and conducts business in this district by operating a physical facility at 10440 Brockwood Road, Dallas, TX 75338 staffed by local employees that ship, distribute, advertise, offer for sale, and/or sell products, including Accused Products (as defined below), thereby purposely availing itself of the benefits and protections under Texas law.

6. Venue in the Northern District of Texas is proper pursuant to 28 U.S.C. §§1391 and 1400(b) because ANA has committed acts of infringement in this judicial district and has regular and established places of business in this judicial district and in Texas.

COUNT ONE - INFRINGEMENT OF U.S. PATENT NO. 8,816,651

7. Multiquip re-alleges and incorporates by reference the preceding paragraphs of this Complaint.

8. On August 26, 2014, the United States Patent and Trademark Office duly and legally issued U.S. Patent No. 8,816,651 ("the '651 Patent"), entitled "Engine-Generator with Load Bank and Control System." A true and correct copy of the '651 Patent is attached as Exhibit A to this Complaint.

9. Multiquip owns by assignment all rights, title, and interest in and to the '651 Patent, including the right to assert all causes of action arising under the '651 Patent and the right to any remedies for the infringement of the '651 Patent. The face of the '651 Patent correctly identifies "Multiquip, Inc." as the "Assignee."

10. ANA makes, uses, sells, offers for sale, imports, and/or distributes in the United States, including within this judicial district, products such as, but not limited to, Smart Load® branded generators (collectively, the "Accused Products").

11. ANA's Smart Load® generators infringe at least claim 19 of the '651 Patent.

12. ANA generators equipped with the Smart Load® load bank system (the "SDG series generators") are manufactured in different sizes and ratings. Any SDG series generator is an engine-generator and a load bank system. For example, nameplates mounted to an ANA Airman model SDG150k engine-generator and load bank system (the "SDG150 system") show that the SDG150 system uses Mosebach Mfg. load banks. On information and belief, SDG150 system design and operation is representative of all SDG series generators.

13. The SDG150 system uses a John Deere model 6068HFG05 diesel engine. As shown by the Airman Catalog, the John Deer engine is mechanically connected to and drives an AC generator.

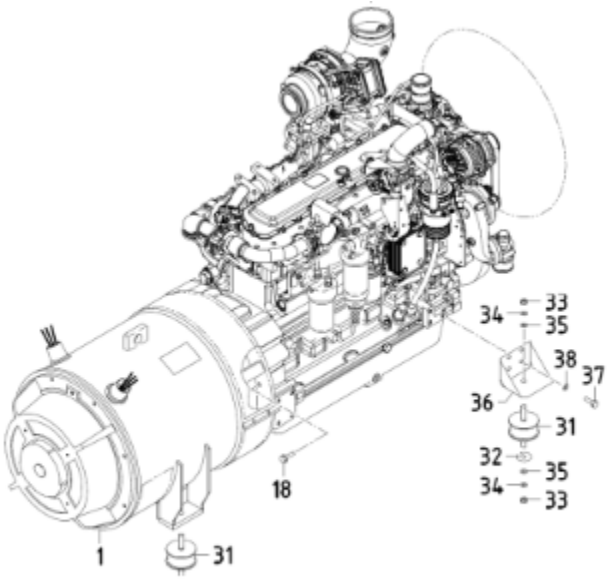

Airman Catalog at p. 25-1

14. The photos below of the interior of an SDG150 system show the engine mechanically connected to the generator.

generator

engine connected to generator

15. The John Deere 6068HFG05 engine includes an engine control module which John Deere calls an "Engine Control Unit" (ECU). *See* John Deere online catalog for "6068HFG05 6.8L Generator Drive Engine" ("Deere Catalog") (avail. at: www.deere.com/en/generator-drive-engines/final-tier-4/powertech-pvl-6-8l/). Below is a photograph of the John Deer ECU for the model 6068 engine inside the SDG150 system:

John Deere ECU

16. The ECU is the rectangular box with labels on the bottom and a heat sink at the top, mounted behind the 3 electrical connectors. Like most internal combustion engines, the John Deere 6068HFG05 has many particulate filters (air, fuel, oil, exhaust). *See* John Deere "Engine Accessories" brochure for model 6068HFG05 at p. 9 (air filter elements):

Air Filter Elements

17. The generator (a.k.a. alternator) of the SDG150 system is in electrical communication with an output bus and a load bank bus. *See* ANA "SMARTLOADTM LOAD BANK SYSTEM ZERO DOWNTIME" brochure for ANA Airman generators 25 – 400 kVA, Form SL1000REV11/21 (hereafter "ANA Form SL1000REV11/21"):

The SmartLoad™ System from ANA automatically optimizes the load on the generator for maximum operating efficiency and reliability.

The patent pending system monitors electrical loads from the generator and automatically engages if the load is 30% or less. The SmartLoad System adds 33-40% load to the generator (Up to 75% max.) and will instantaneously shut off when a load inrush is detected or 75% load is exceeded.

18. Shown below is a photograph of the output bus on the SDG150 system:

19. Shown below is a photograph of output bus connection points on the SDG150 system:

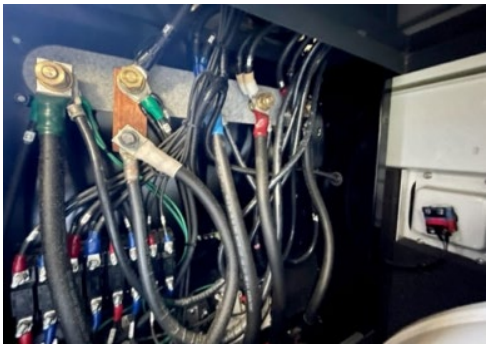

20. Shown below is a photograph of the load bank mounted at the top of the SDG150 system:

21. The load bank necessarily includes a load bank bus in electrical communication with the alternator because the load bank bus is capable of loading the alternator.

22. The SDG system includes a generator controller – a Deep Sea Electronics controller model DSE7310MKII – that is wired for electrical communication with the ECU. This photo of the generator controller was taken from the interior of the SDG150 system:

23. The generator controller is configured to monitor and determine the output voltage selection made by an operator using the Voltage Adjuster switch, which is selectable among 480V, 3-ph; 240V, 3-ph; and 240V, 1-ph.

24. The photo below shows the rear electrical connections to the generator controller:

25. The photo below is a magnified view of the green terminal block of the generator controller at lower right:

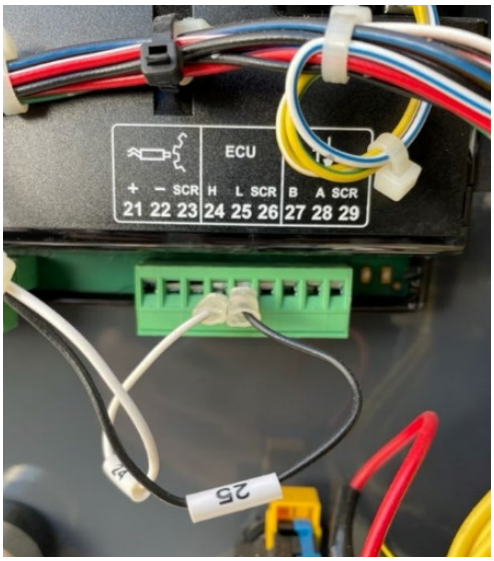

Wires 24 and 25 connect directly to the H (24) and L (25) ECU input terminals of the generator controller.

26. A test of the electrical resistance between terminals 24 and 25 yielded 60 ohms, which is the standard resistance reading expected across CANBUS input terminals. CANBUS is the standard communication protocol for engine diagnostics used by the ECU in the John Deere engine model 6068.

27. The other ends of wires 24 and 25 are routed to the John Deere model 6068 engine control module (ECU) through the flexible conduit shown below:

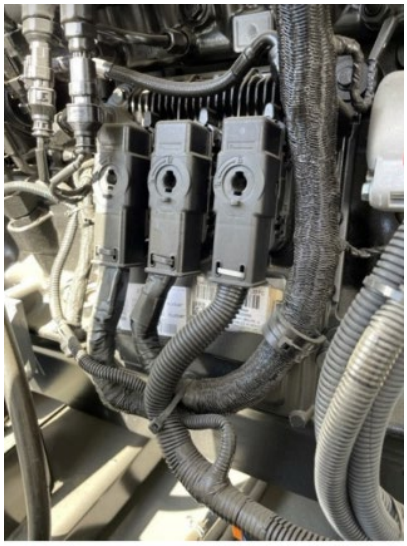

John Deere ECU

The generator controller in the SDG150 system is therefore in electrical communication with the engine control module (ECU). So connected, the generator controller is capable of reading engine diagnostic signals from the ECU.

28. The generator controller has at least one load step output. The photo below shows a magnified view of the green terminal block of the generator controller at lower left. The black cable in the foreground connects to terminal 1 (-) and the red cable in the foreground connects to positive terminal 11 (H). Terminal 1(-) is battery ground at voltage "-VE", and terminal 11(H) is a "user configurable +VE **output**". *See* "DSE7310 MKII & DSE7320 MKII Installation Instructions" 053-181 Issue 7, Typical Wiring Diagram.

29. The controller output terminal 11 (H) is a normally open (NO) voltage output terminal, according to its label:

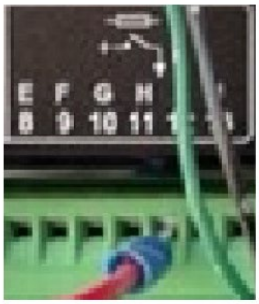

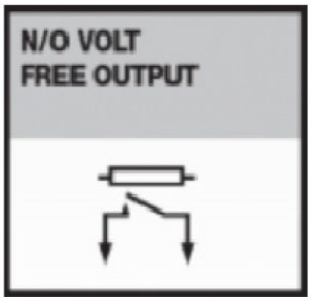

See www.deepseaelectronics.com/genset/manual-auto-start-control-modules/dse7310-mkii "Connection Diagram".

30. The red and black cables are then routed through a black cable sleeve:

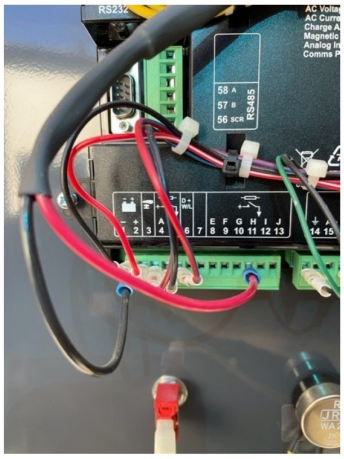

Those same red and black cables emerge from the opposite end of the black cable sleeve and connect to terminals mounted on a bank of Siemens control relays.

31. A Siemens model 3UG4633-1AL30 voltage monitoring and time-delay relay is mounted on the left side of the bank, as shown in the photo below:

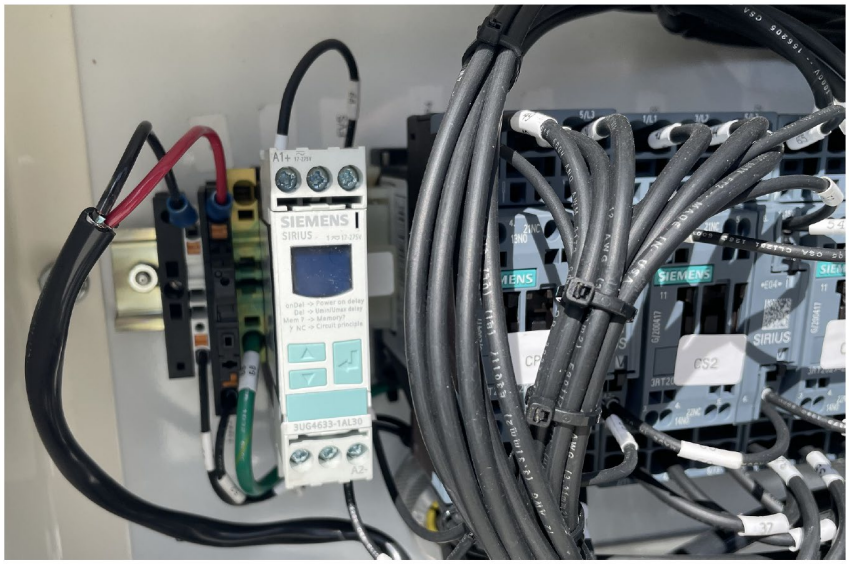

32. This connection allows the generator controller to control the Siemens relay and thereby enable operation of the Sirius load contactors that are shown to the right of the relay. The load contactors are the electrical switches that connect ("step up") or disconnect ("step down") resistive load from the load bank to and from the generator (see element (f) below). Because the output of terminals 1 (-) and 11 (H) on the generator controller enable operation of the load contactors, the generator controller has at least one load step output.

33. The 3UG4633-1AL30 relay has a single pole, double throw (SPDT) contact. *See* https://www.farnell.com/datasheets/3557925.pdf. The relay monitors the voltage signal received from the red and black cables and in response to sensing a triggering voltage, the relay changes the state of its SPDT contact after a pre-selected time delay. This causes either of two load step contactor configurations to close, thereby energizing the load bank. The SDG150 system therefore includes at least one load step contactor in electrical communication with at least one load step output.

34. The load step contactors are the six grey colored Siemens devices labeled CP4, CS2, CP3, CP2, CS1 and CP1 mounted to the right of the 3UG4633-1AL30 relay:

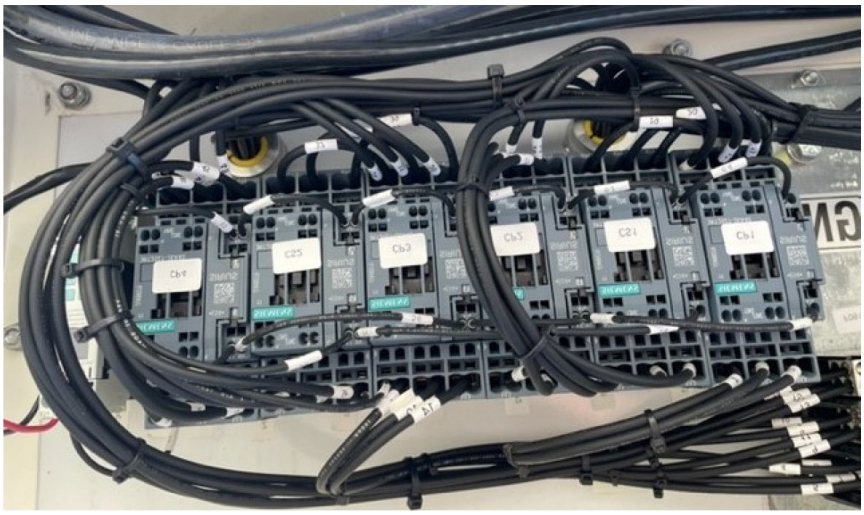

35. The 3-way voltage selector switch beneath the controller display allows the operator to configure the SDG150 system for 480V 3-ph, 240V 3-ph, or 240 V 1-ph output. The generator controller monitors the voltage selection, and based on the selection configures the load step contactors to actuate as follows, for an underloaded (< 30%) generator:

- for 240 V 1-phase or 3-phase: CP4, CP3, CP2, CP1
- for 480 V 3-phase: CS1, CS2

36. The generator controller causes closure of the appropriate one of the two load step contactor configurations listed above when the generator controller senses load < 30% of rated via CANBUS ECU signal or direct measurement of generator load (*see* www.youtube.com/watch?v=FyT8nMeDHQQ at 1:15). When the load step contactors close, resistive loads on the load bank are energized to ensure that the generator operates under an optimal load:

The SmartLoad™ System from ANA automatically optimizes the load on the generator for maximum operating efficiency and reliability.

The patent pending system monitors electrical loads from the generator and automatically engages if the load is 30% or less. The SmartLoad System adds 33-40% load to the generator (Up to 75% max.) and will instantaneously shut off when a load inrush is detected or 75% load is exceeded.

Maintain power reliability, reduce maintenance and prevent wet stacking with the SmartLoad Fully Automatic Load Bank System from ANA.

ANA Form SL1000REV11/21

37. The foregoing theory of operation was confirmed by testing the SDG150 system. The system was turned ON by closing the main output breaker, with no external load on the generator. For about 5 minutes, the normally open (NO) output across terminals 1 (-) and 11 (H) remained open, as indicated by the positive open circuit reading on the multimeter, and a "Dummy Load" display of 0, i.e. the load bank was not connected:

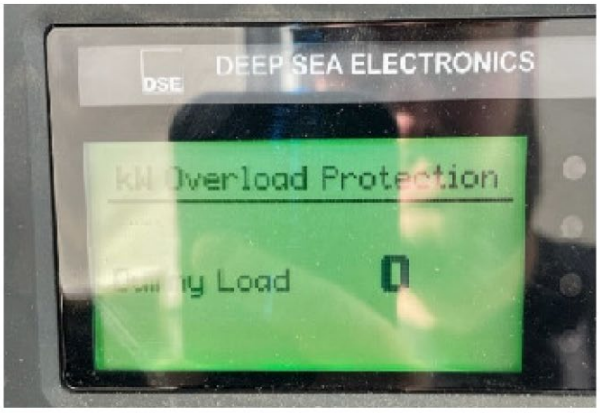

38. After the 5 min. time delay, the controller closed the NO contact at 1(-) and 11(H), as indicated by the positive resistance reading on the multimeter. At the same time, the generator was loaded with resistive load from the load bank, and the generator controller displayed a "Dummy Load" of 1.

Thus, actuation of the load step contactors is coincident with the controller outputting a voltage signal via the load step output across terminals 1(-) and 11(H).

39. The SDG150 system includes at least one load step resistor in electrical communication with said load bank bus by way of said at least one load step contactor. *See* elements (c) and (f) above. For the Mosebach load bank bus to load the generator, the load step contactors must be configured to connect the load bank resistors to the load bank bus.

40. An example "neglect scenario" or "neglect case" includes one in which the generator is operating at or below a "load window" bounded by pre-set lower and upper load levels. '651 Patent at 2:50-64. The SDG150 system has a load window bounded by a pre-set lower level of 30% of rated load. The generator controller of the SDG150 system operates the load step contactors to connect load from the resistive load bank in the case of neglect where generator load is below 30%. *See* element (f) above; *see also* "SmartLoad by ANA Corp." demonstration video (www.youtube.com/watch?v=FyT8nMeDHQQ) from 0:47 to 5:31.

41. An example "load spike" scenario includes one in which the load connected to the engine-generator exceeds some pre-set value, i.e. the upper load level. '651 Patent at 3:64 to 4:5. The generator controller for the SDG150 system "will instantaneously shut off [load bank load] when a load inrush is detected or 75% load is exceeded." *See* ANA Form SL1000REV11/21 excerpt in element (f) above. Therefore, the generator controller for the SDG150 system is capable of operating the load step contactor to disconnect the load step resistor in case of a load spike, i.e.

load in excess of 75% of the generator's rated load. *See* "SmartLoad by ANA Corp." demonstration video (cited above).

42. The SDG150 system includes a load bank system comprising a plurality of load step resistors. *See* element (c) above; *see also* "SmartLoad by ANA Corp." demonstration video (cited above).

43. The SDG150 system is an engine-generator system that includes a diesel engine. *See* element (a) above. *See also* "SmartLoad by ANA Corp." demonstration video (cited above).

44. The SDG150 system is an engine-generator system that includes a Tier IV Interim or newer diesel engine. *See* Deere Catalog at p. 4 ("EPA Tier 4").

45. The SDG150 system comprises a poly-phase electrical system. *See* element (f) above – the system is equipped for 480V 3-phase and 240V 3-phase loads. *See also* "SmartLoad by ANA Corp." demonstration video (cited above).

46. The SDG150 system comprises a three-phase electrical system. *See* element (f) above – the system is equipped for 480V 3-phase and 240V 3-phase loads. *See also* "SmartLoad by ANA Corp." demonstration video (cited above).

47. The SDG150 system comprises a common base and enclosure, as shown below:

48. The SDG150 system is configured to operate its load step contactor to disconnect the resistive loads within 10 seconds:

> Smart Load automatically turns on after 5 minutes if the generator load is 30% or less to prevent light loading. Maximum loading is up to 75% and will instantaneously turn off when a load inrush is detected.
>
> ANA SMARTLOAD® brochure, copyright 2020, ANA•031119

49. The SDG150 system is configured to operate its load step contactor to disconnect the resistive loads within 1 second:

> Smart Load automatically turns on after 5 minutes if the generator load is 30% or less to prevent light loading. Maximum loading is up to 75% and will instantaneously turn off when a load inrush is detected.
>
> ANA SMARTLOAD® brochure, copyright 2020, ANA•031119

50. The SDG150 system is configured to operate its load step contactor to disconnect the resistive loads within 0.1 seconds:

> Smart Load automatically turns on after 5 minutes if the generator load is 30% or less to prevent light loading. Maximum loading is up to 75% and will instantaneously turn off when a load inrush is detected.
>
> ANA SMARTLOAD® brochure, copyright 2020, ANA•031119

51. ANA has admitted in its trademark application 90/439,101 having sold Smart Load™ branded generators since March 31, 2020. ANA is therefore liable to Multiquip for damages from patent infringement since at least that date.

52. In view of preceding paragraphs, each and every element of at least claim 19 of the ’651 Patent is found in the Accused Products.

53. ANA continues to directly infringe at least one claim of the ’651 Patent, literally or under the doctrine of equivalents, by making, using, selling, offering for sale, importing, and/or

distributing the Accused Products in the United States, including within this judicial district, without the authority of Multiquip.

54. On February 10, 2022, Multiquip sent ANA a Notice of Patent Infringement (the "Notice of Patent Infringement"), explaining that ANA was infringing the '651 Patent. ANA therefore received notice and actual or constructive knowledge of the '651 Patent since at least the date of service of the Notice of Patent Infringement. On May 19, 2022, Multiquip sent ANA a letter containing a claim chart outlining ANA's infringement of claim 19. The claim chart is attached hereto as Exhibit B and is incorporated by reference.

55. Since at least the date of service of the Notice of Patent Infringement, through its actions, ANA has actively induced product makers, distributors, retailers, and/or end users of the Accused Products to infringe the '651 Patent throughout the United States, including within this judicial district, by, among other things, advertising and promoting the use of the Accused Products in various websites, including providing and disseminating product descriptions, operating manuals, and other instructions on how to implement and configure the Accused Products. Examples of such advertising, promoting, and/or instructing include the documents at:

- https://anacorp.com/products-generator-SDG150S-8E1.php
- https://anacorp.com/products-generator-SDG125S-8E1.php
- https://anacorp.com/about.php

56. Since at least the date of service of the Notice of Patent Infringement, through its actions, ANA has contributed to the infringement of the '651 Patent by having others sell, offer for sale, or use the Accused Products throughout the United States, including within this judicial district, with knowledge that the Accused Products infringe the '651 Patent. The Accused Products are especially made or adapted for infringing the '651 Patent and have no substantial non-

infringing use. For example, in view of the preceding paragraphs, the Accused Products contain functionality which is material to at least one claim of the ’651 Patent.

JURY DEMAND

Multiquip hereby demands a jury on all issues so triable.

REQUEST FOR RELIEF

WHEREFORE, Multiquip respectfully requests that the Court:

(A) Enter judgment that ANA infringes one or more claims of the ’651 Patent literally and/or under the doctrine of equivalents;

(B) Enter judgment that ANA has induced infringement and continues to induce infringement of one or more claims of the ’651 Patent;

(C) Enter judgment that ANA has contributed to and continues to contribute to the infringement of one or more claims of the ’651 Patent;

(D) Award Multiquip damages, to be paid by ANA in an amount adequate to compensate Multiquip for such damages, together with pre-judgment and post-judgment interest for the infringement by ANA of the ’651 Patent through the date such judgment is entered in accordance with 35 U.S.C. § 284, and increase such award by up to three times the amount found or assessed in accordance with 35 U.S.C. § 284;

(E) Declare this case exceptional pursuant to 35 U.S.C. § 285; and

(F) Award Multiquip its costs, disbursements, attorneys’ fees, and such further and additional relief as is deemed appropriate by this Court.

Dated: November 18, 2022

Respectfully submitted,

/s/ Travis Richins

James L. Etheridge
Texas State Bar No. 24059147
Ryan S. Loveless
Texas State Bar No. 24036997
Travis L. Richins
Texas State Bar No. 24061296
ETHERIDGE LAW GROUP, PLLC
2600 E. Southlake Blvd., Suite 120 / 324
Southlake, Texas 76092
Telephone: (817) 470-7249
Facsimile: (817) 887-5950
Jim@EtheridgeLaw.com
Ryan@EtheridgeLaw.com
Travis@EtheridgeLaw.com

COUNSEL FOR MULTIQUIP