US 20050195857A1

(19) United States

(12) Patent Application Publication

(10) Pub. No.: US 2005/0195857 A1

(43) Pub. Date: Sep. 8, 2005

Tsai

(54) METHOD AND APPARATUS FOR EXTRACTING PAYLOAD FROM A PACKETIZED ELEMENTARY STREAM PACKET

(76) Inventor: **Ching-Yu Tsai**, Taipei Hsien (TW)

Correspondence Address:
NORTH AMERICA INTERNATIONAL PATENT OFFICE (NAIPC)
P.O. BOX 506
MERRIFIELD, VA 22116 (US)

(21) Appl. No.: 10/906,701

(22) Filed: Mar. 2, 2005

(30) Foreign Application Priority Data

Mar. 3, 2004 (TW) 093105630

Publication Classification

(51) Int. Cl.[7] H04L 12/28

(52) U.S. Cl. 370/470

(57) ABSTRACT

A data extracting system for extracting a payload from a PES packet of a transport stream or a program stream includes a data source for providing a PES packet; a packet-processing device electrically connected to the data source for calculating length of the PES packet and generating a corresponding packet length value; a transmitting interface electrically connected to the packet-processing device for outputting the payload of the PES packet stored in the packet-processing device; and a control circuit for controlling operation of the data extracting system; wherein the control circuit controls the transmitting interface to output the payload of the PES packet according to the packet length value.

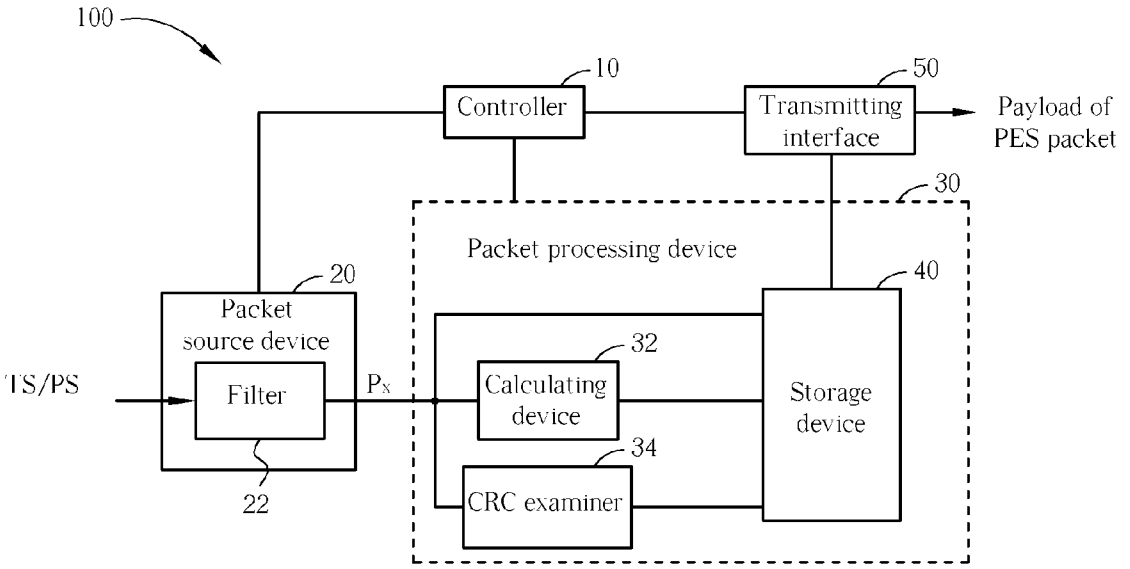

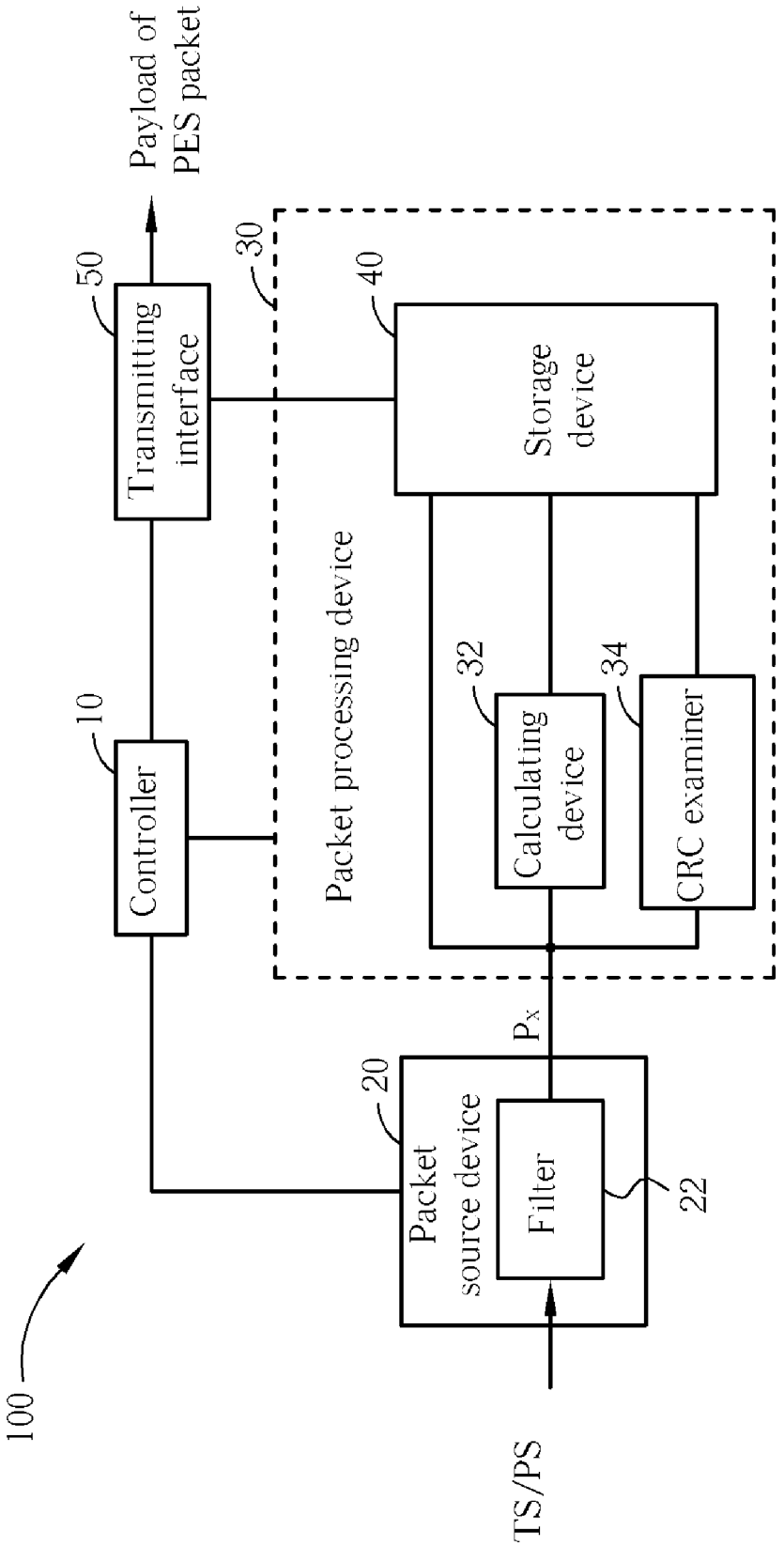
100
TS/PS
Packet source device
20
Filter
22
P_x
Controller
10
Packet processing device
30
Calculating device
32
CRC examiner
34
Storage device
40
Transmitting interface
50
Payload of PES packet

Fig. 1

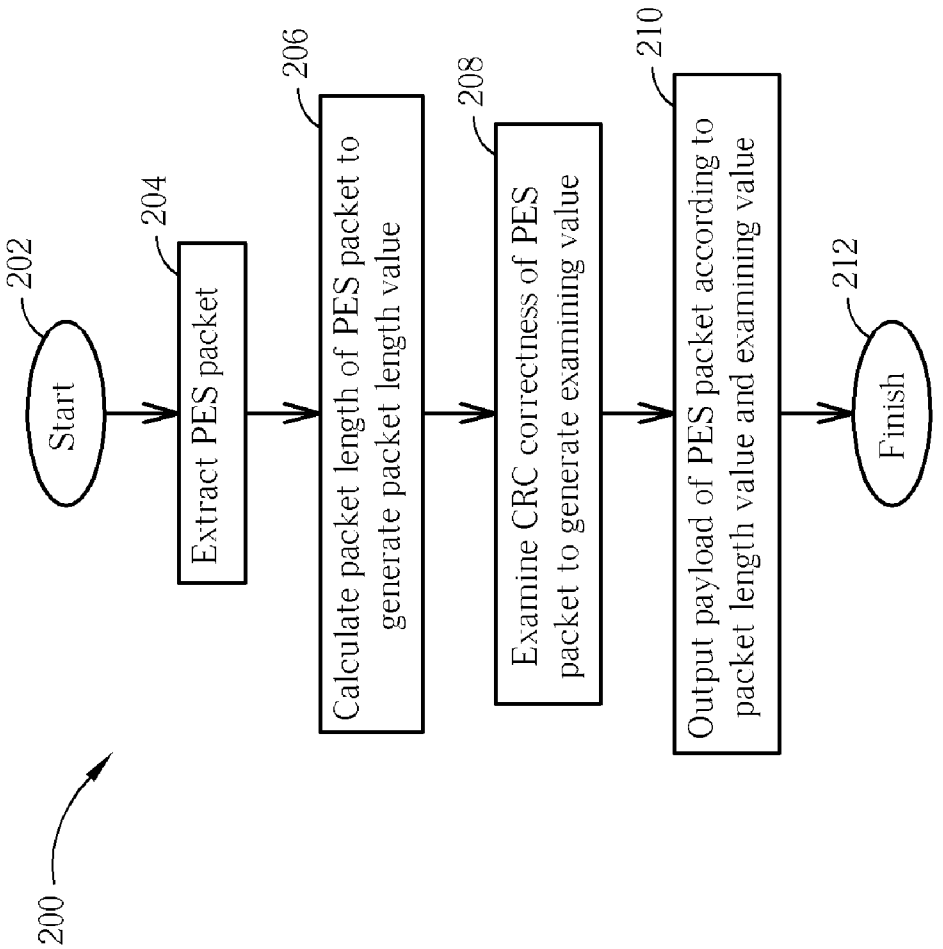
200
202
Start
204
Extract PES packet
206
Calculate packet length of PES packet to generate packet length value
208
Examine CRC correctness of PES packet to generate examining value
210
Output payload of PES packet according to packet length value and examining value
212
Finish

Fig. 2

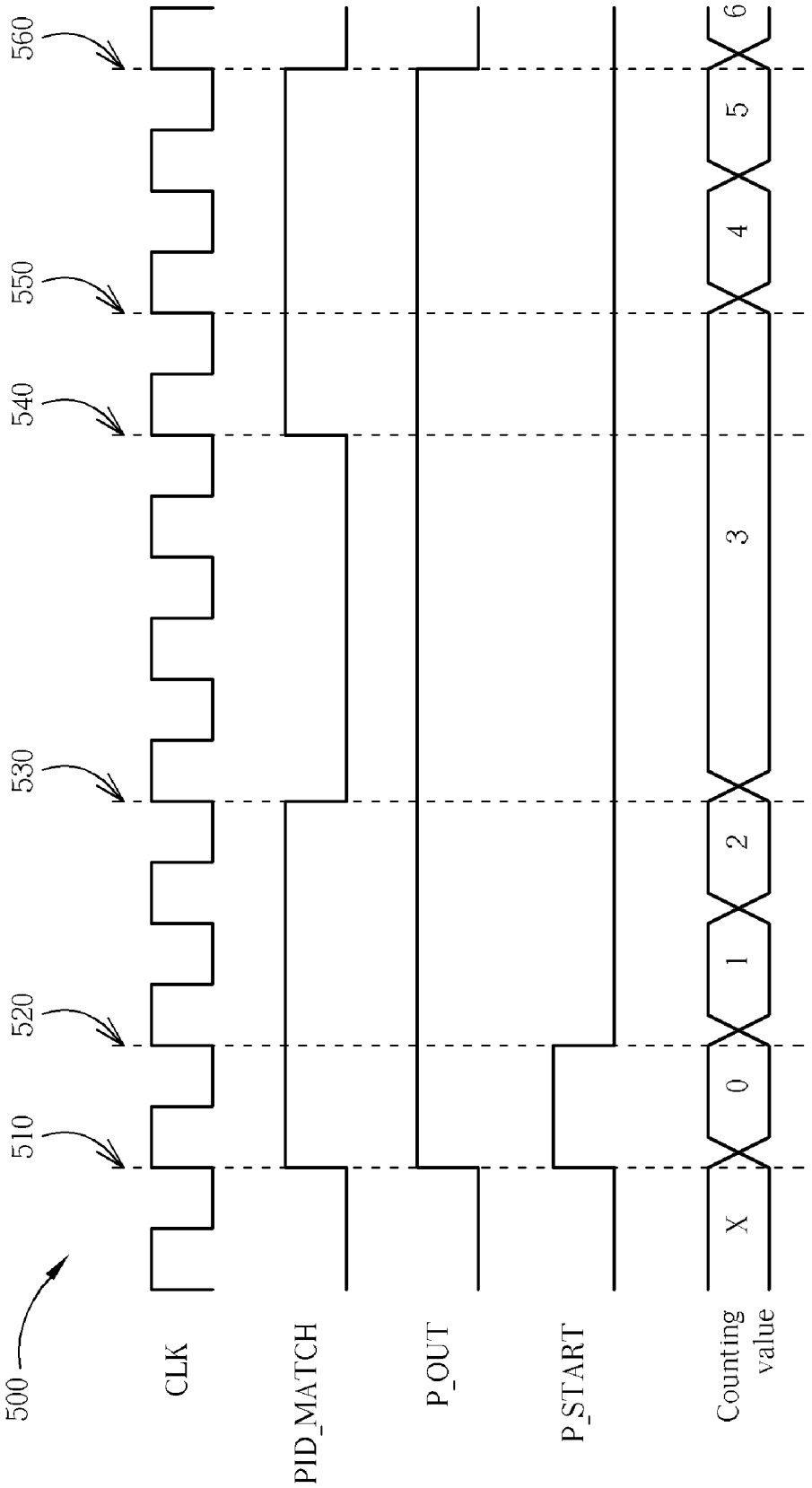
500
510
520
530
540
550
560
CLK
PID_MATCH
P_OUT
P_START
Counting value
X
0
1
2
3
4
5
6

Fig. 3

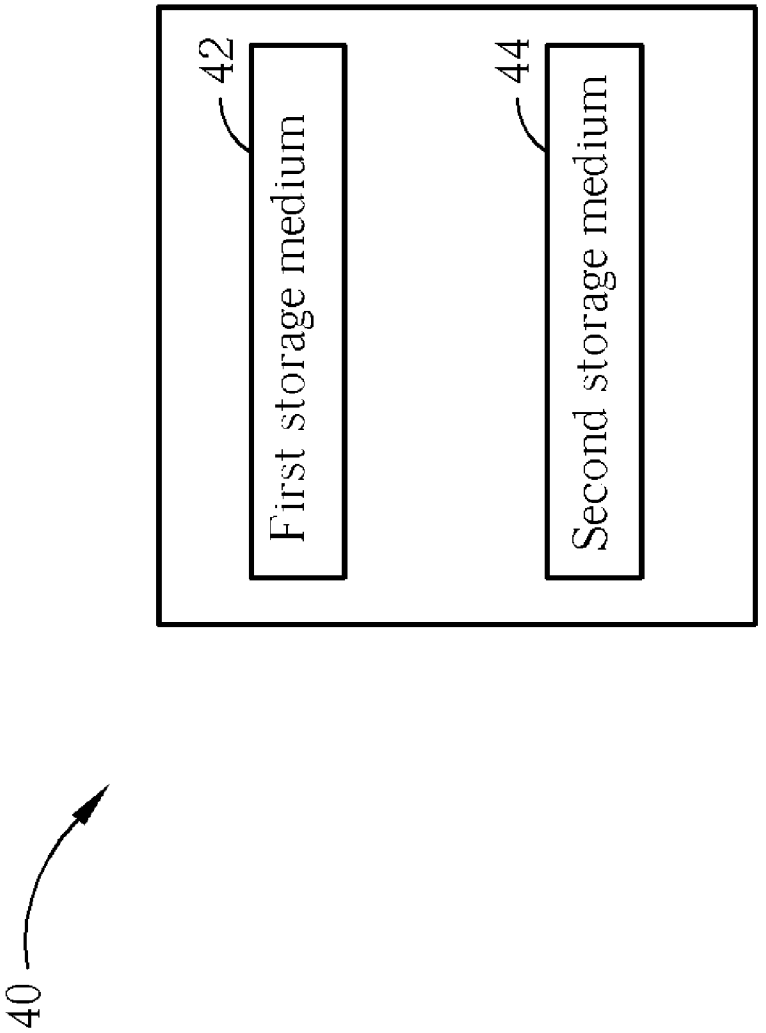

Fig. 4

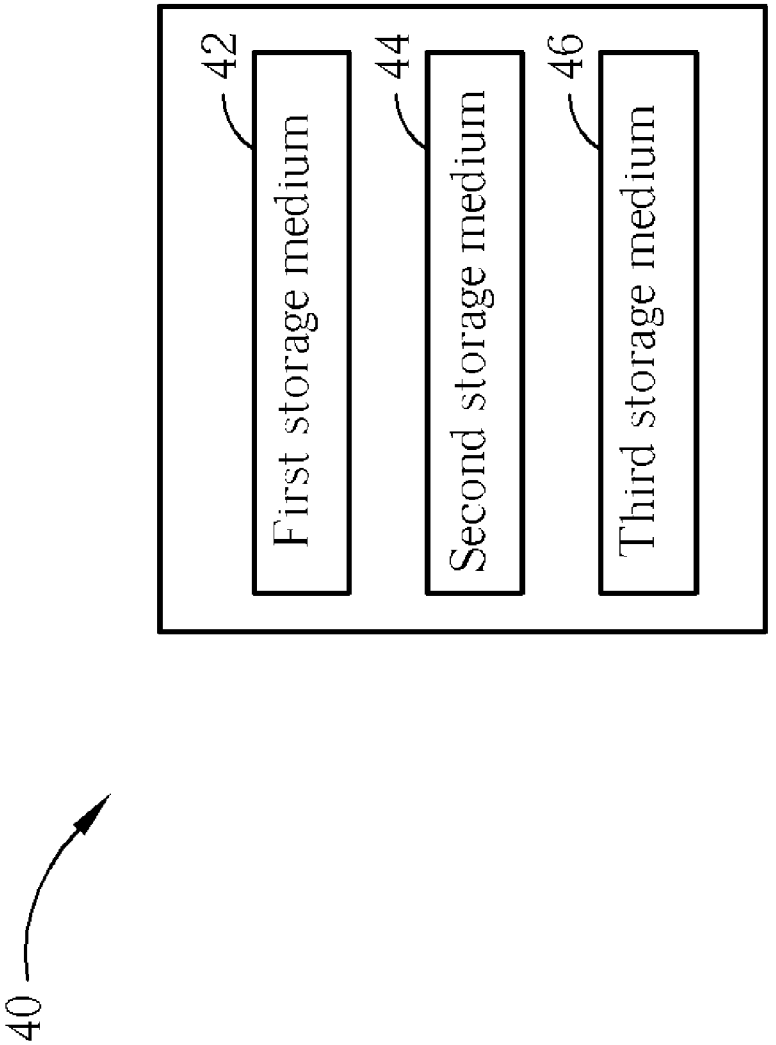
40
42
First storage medium
44
Second storage medium
46
Third storage medium

Fig. 5

METHOD AND APPARATUS FOR EXTRACTING PAYLOAD FROM A PACKETIZED ELEMENTARY STREAM PACKET

BACKGROUND

[0001] The invention relates to a method of extracting the payload from a data packet and a related apparatus, and more particularly, to a method of extracting the payload from a packetized elementary stream packet and a related apparatus.

[0002] Encoded video data is referred to as an elementary stream (ES). An ES becomes a packetized elementary stream (PES) through a packetize processing. According to the standard of moving picture coding experts group 2 (MPEG2), two streams that are defined for transmitting a PES are program stream (PS) and transport stream (TS).

[0003] PS is preferred to be used in a storage medium where errors rarely occur. The reason that PS is not used in a system which needs to check errors is that the size of the PS packet is not fixed. Compressed data of a PS is usually stored on discs such as DVD discs. A PS is basically similar to the system stream of MPEG1, but provides some advanced functions by utilizing advanced syntax and new equations.

[0004] TS utilizes fixed-size packets. This makes it not only easy for hardware to process the data but also easy to execute error corrections. Therefore, TS is mainly utilized for transmission when errors easily occur such as IEEE 1394 protocol or digital video broadcasting (DVB). Each TS packet occupies 188 bytes, wherein the first 4 bytes are a header and the payload after the header is data of a PES packet. Each header of the TS packet has a field for storing a packet identifier (PID), which represents whether the contents of the TS packet correspond to video data, audio data, or other data.

[0005] Generally speaking, when the related art transmits a payload of a PES packet through direct memory access (DMA), the required parameters includes a source address, a destination address, a transmitting length, etc. This all depends on the PES packet length information stored in the PES packet header. However, each PES packet header only has a 2-byte (16 bit) field for storing the packet length. Therefore, the field is defined as 0 if the packet length of the PES packet is larger than what a 16-bit field can represent (refer to ISO/IEC 13818-1, Information Technology-Generic Coding of Moving Pictures and Associated Audio Information: Systems). Therefore, if the packet length field is defined as 0, the related art is not capable of transmitting data through DMA because it is unable to determine the PEC packet length from the PEC packet header. This makes data transmission inefficient.

SUMMARY

[0006] It is therefore an objective of the claimed invention to provide a method and a related device for extracting a payload from a PES packet by calculating an actual packet length of the PES packet to solve the above-mentioned problem.

[0007] According to an embodiment of the present invention, a method of extracting a payload of a packetized elementary stream packet (PES packet) from a packetized elemebtary stream (PES) includes utilizing a packet processing device for calculating a length of the PES packet to generate a corresponding packet length value; and outputting the payload of the PES packet according to the packet length value.

[0008] According to another embodiment of the present invention, a data-extracting system for extracting a payload of a packetized elementary stream packet (PES packet) from a transport stream (TS) or a program stream (PS) includes a data source device for providing a PES packet; a packet processing device electrically connected to the data source device for calculating packet length of the PES packet to generate a packet length value; a transmitting interface electrically connected to the packet processing device for receiving the PES packet from the packet processing device and outputting the payload of the PES packet; and a controller for controlling the operation of the data-extracting system; wherein the controller controls the transmitting interface to output the payload of the PES packet according to the packet length value.

[0009] An advantage of the present invention is that the payload of PES packets is capable of being transmitted through DMA by calculating the PES packet length when receiving the PES packet even if the packet length field is defined as 0 or the packet length stored in the packet length field is incorrect so that the above-mentioned inefficiency of data transmission is eliminated.

[0010] These and other objectives of the claimed invention will no doubt become obvious to those of ordinary skill in the art after reading the following detailed description of the preferred embodiment that is illustrated in the various figures and drawings.

BRIEF DESCRIPTION OF DRAWINGS

[0011] **FIG. 1** is a schematic diagram of a data-extracting system according to the present invention.

[0012] **FIG. 2** is a flowchart of a method of extracting a payload from a PES packet according to the present invention

[0013] **FIG. 3** is a timeline diagram of an embodiment of the calculating device of **FIG. 1**.

[0014] **FIGS. 4 and 5** are other embodiments of the calculating device of **FIG. 1**.

DETAILED DESCRIPTION

[0015] Please refer to **FIG. 1**, which is a schematic diagram of a data-extracting system **100** according to the present invention. The data-extracting system **100** comprises a controller **10**, a packet source **20** electrically connected to the controller **10**, a packet processing device **30** electrically connected to the controller **10** and the packet source **20**, and a transmitting interface **50** electrically connected to the controller **10** and the packet processing device **30**. The controller **10** is utilized for controlling the operation of the data-extracting system **100**. The packet source device **20** is utilized for receiving and filtering a TS or a PS to output a PES packet (Px). The packet processing device **30** is mainly utilized for receiving the PES packet (Px) and calculating the packet length of the PES packet (Px). The packet processing device **30** comprises a calculating device **32**, a

cyclic redundancy check (CRC) examiner **34**, and a storage device **40**. The transmitting interface **50** is utilized for outputting payload (Payload_x) of the PES packet (Px).

[**0016**] The data-extracting system **100** utilizes the packet source device **20** to receive a PS or a TS and extracts a PES packet (Px) from the PS or TS. The data-extracting system **100** then utilizes the packet processing device **30** to calculate the packet length of the PES packet (Px), and finally utilizes the controller **10** to control the transmitting interface **50** according to the packet length for outputting the payload of the PES packet (Px) through DMA. The details of the data-extracting system **100** are illustrated in the following.

[**0017**] Please refer to **FIG. 2** in conjunction with **FIG. 1**. **FIG. 2** is a flowchart **200** of the data-extracting system **100** to extract payload of a PES packet from a PS or a TS. The flowchart **200** comprises following steps:

[**0018**] Step **202**: Start.

[**0019**] Step **204**: Utilize the packet source device **20** to receive and filter a TS or a PS for providing a PES packet (Px).

[**0020**] Step **206**: Utilize the calculating device **32** of the packet processing device **30** to calculate the packet length of the PES packet (Px) for generating a corresponding packet length value (Length_x).

[**0021**] Step **208**: Utilize the cyclic redundancy check (CRC) examiner **34** of the packet processing device **30** to examine the correctness of the CRC of the PES packet (Px) for generating a corresponding examining value (CRC_x).

[**0022**] Step **210**: Utilize the controller **10** to control the transmitting interface **50** to output payload (Payload_x) of the PES packet (Px) according to the packet length value (Length_x) and the examining value (CRC_x).

[**0023**] Step **212**: Finish.

[**0024**] Take for example the situation where the data-extracting system **100** extracts payload of a PES packet from a TS to help illustrate the operation of the flowchart **200**.

[**0025**] In step **204**, the data-extracting system **100** of the present invention utilizes the packet source **20** to receive a TS and utilizes a filter **22** of the packet source device **20** to filter the received TS. In this preferred embodiment, the stream transmitted into the packet source device is a TS, therefore, the filter **22** can be a packet identifier filter (PID filter) for filtering the needed TS packets from the received TS and recombining the needed TS packets to output a PES packet (Px). The PES packet (Px) is transmitted into the packet processing device **30** to be processed and temporarily stored in the storage device **40**.

[**0026**] In step **206**, the packet processing device **30** utilizes the calculating device to calculate the bit-number of the PES packet (Px) when receiving the PES packet (Px). Therefore, the calculating device **32** is capable of calculating the packet length of the PES packet, generating a packet length value (Length_x) while receiving the PES packet (Px), and storing the packet length value (Length_x) in the storage device **40**.

[**0027**] Please note that a technical characteristic of the present invention lies in that while the packet source device **20** filters out the PES packet (Px) from a PS or a TS and transmits the PES packet (Px) into the packet processing device **30**, the packet processing device **30** immediately utilizes the calculating device **32** to calculate the packet length of the PES packet (Px). In the preferred embodiment, the calculating device **32** executes the calculating operation according to related signals generated while the filter **22** filters out the PES packet (Px). The details of operation will be illustrated later.

[**0028**] In step **208**, the packet processing device **30** utilizes the cyclic redundancy check (CRC) examiner **34** to examine the correctness of the CRC stored in the header of the PES packet (Px) for generating a corresponding examining value (CRC_x) and storing the examining value (CRC_x) in the storage device **40**. In the preferred embodiment, if the result of examining the CRC of the PES packet (Px) is correct, the CRC examiner **34** set the examining value (CRC_x) as 1. On the contrary, if the result of examining the CRC of the PES packet (Px) is incorrect, the CRC examiner **34** sets the examining value (CRC_x) as 0. Values of the above-mentioned examining value (CRC_x) are used only for illustration and are not meant as limitations. For example, values of the above-mentioned examining value (CRC_x) are able to be some other predetermined values instead of 0 and 1.

[**0029**] Additionally, in the flowchart **200**, the ordering of step **206** and step **208** is for illustration only and not meant as a limitation. In fact, the order of steps **206** and **208** can be reversed while maintaining the concept of the present invention.

[**0030**] In step **210**, the controller **10** of the data-extracting system **100** reads the packet length value (Length_x), the examining value (CRC_x), and the header of the PES packet (Px) stored in the storage device **40** to control the transmitting interface **50** to output the payload (Payload_x) of the PES packet (Px).

[**0031**] If the examining value (CRC_x) read by the controller **10** is 0, this represents that an error may occur when transmitting the PES packet (Px). Therefore, the controller **10** controls the transmitting interface **50** to abort transmitting the payload (Payload_x) of the PES packet (Px). On the contrary, if the examining value (CRC_x) is 1, this represents that contents of the PES packet (Px) are correct. Therefore, the controller **10** is capable of calculating the length of payload (Payload_x) of the PES packet Px according to the read packet length value (Length_x). Because the packet length value (Length_x) represents the sum of the header and payload (Payload_x) of the PES packet (Px) and the header length of the PES packet (Px) is stored in the PES header length field, the controller **10** is capable of calculating the actual length value (Length_x_payload) of payload (Payload_x) of the PES packet (Px) by utilizing the packet length value (Length_x) to subtract the header length of the PES packet (Px) after reading the header of the PES packet from the storage device **40** to know the header length of the PES packet.

[**0032**] Therefore, the controller **10** is capable of getting the starting address (Address_x_payload) of the payload (Payload_x) of the PES packet (Px) by simply shifting the header length value of the PES packet (Px) from the address of the PES packet (Px) in the storage device **40**. In step **210**, the controller **10** is capable of transmitting the starting address (Address_x_payload) and the length (Length_x-

_payload) into the transmitting interface **50** to allow the transmitting interface **50** to transmit the payload (Payload_x) of the PES packet (Px) into a target device (such as a memory or a video decoder) through DMA according to the starting address (Address_x_payload) and the length (Length_x_payload).

[**0033**] **FIG. 3** is utilized for illustrating the above-mentioned method of calculating the PES packet (Px). Please refer to **FIG. 3**, which is a timeline diagram **500** of an embodiment of the calculating device **32** in **FIG. 1**. The clock signal CLK is a working clock of the calculating device **32**. The signal PID_MATCH indicates whether a TS packet being processed is one of the packets used to recombine the PES packet. If the signal PID_MATCH is 1, this indicates that a TS being processed by the filter **22** is one of the packets used to be recombined into the PES packet (Px). Therefore, the calculating device **32** counts the byte data received by the packet processing device **30**. On the contrary, if the signal PID_MATCH is 0, the calculating device **32** does not count the byte data received by the packet processing device **30**. The signal P_OUT indicates the state of the filter **22** outputting packets. If the signal P_OUT is 1, this indicates that the filter **22** is transmitting data into the packet processing device **30**. Therefore, the signal P_OUT can be regarded as an enabling signal of the calculating device **32**. The signal P_START indicates whether the byte data outputted by the filter **22** is a starting point of the PES packet (Px). If the signal P_START is 1, this indicates that the byte data being outputted by the filter **22** is a starting point of the PES packet (Px). Therefore, in this embodiment, the calculating device **32** resets to 0 at the rising edge of P_START and begins counting when triggered at the rising edge of the next working clock CLK.

[**0034**] As shown in **FIG. 3**, at time **510**, the signal P_OUT is 1, and this indicates that the filter **22** transmits data into the packet processing device **32**. At this time, the signal PID_MATCH is 1, and the signal P_START is also 1. This indicates that the data received by the packet processing device is a starting point of the PES packet (Px), so the calculating device **32** has to reset to 0 and start to count when the rising edge of the next working clock CLK occurs. The counting value of the calculating device **32** starts to increase from a value of 1 at time **520** to a value of 3 at time **530**. However, between time **530** and time **54**, the calculating device **32** stops counting because the signal PID_MATCH is 0 so that the counting value remains 3.

[**0035**] Next, at time **540**, because the signal PID_MATCH becomes 1 again, the calculating device **32** continues to increase the counting value when the rising edge of the next working clock CLK occurs (at time **550**). This occurs until time **560**, where the signal P_OUT becomes 0 to indicate that the filter **22** stops transmitting data into the packet processing device **32**. Therefore, the calculating device pauses the counting value and, at this time, the counting value is 6. Before the signal P_START becomes 1 again, the counting value is incremented to indicate that the data being outputted by the filter **22** still belongs to the PES packet (Px). This also means that in the preferred embodiment, when the packet source device **20** completely transmits the PES packet (Px) into the packet processing device, the calculating device **32** is capable of completely calculating the packet length of the PES packet (Px) and generating the corresponding length value (Length_x). Therefore, the present invention calculating device **32** does not delay the time of transmitting the PES packet (Px) when calculating the packet length of the PES packet.

[**0036**] Please note that the PES packet (Px), the packet length value (Length_x), and the examining value (CRC_x) are all stored in the storage device **40**. In an embodiment of the present invention, the storage device **40** is a volatile memory (such as DRAM or SRAM). The PES packet (Px) and other related information (such as the packet length value Length_x and the examining value CRC_x) are capable of being transmitted into the storage device **40**. Therefore, the PES packet (Px), the packet length value (Length_x), and the examining value (CRC_x) can be orderly outputted in order to be stored in the continuous addresses of the storage device **40** or respectively stored in different positions of the storage device **40**.

[**0037**] However, in practice, the storage device **40** is capable of being composed of different storage mediums. Please refer to **FIGS. 4 and 5**. **FIGS. 4 and 5** are different embodiments of the calculating device in **FIG. 1**. As shown in **FIG. 4**, the storage device **40** comprises a first storage medium **42** electrically connected to the packet source device **20**, and a second storage medium **44** electrically connected to the calculating device **32** and the CRC examiner **34**. The first storage medium **42** can be a volatile memory (such as DRAM or SRAM) for temporarily storing the PES packet (Px). The second medium **44** can be a volatile memory or a buffer for temporarily storing the packet length value (Length_x) and the examining value (CRC_x). The storage device **40** in **FIG. 5** comprises a first storage medium **42** electrically connected to the packet source device **20**, a second storage medium **44** electrically connected to the calculating device **32**, and a third storage medium **46** electrically connected to the CRC examiner **34**. As mentioned above, the first storage medium **42** can be a volatile memory (such as DRAM or SRAM) for temporarily storing the PES packet (Px). The second storage medium **44** can be a volatile memory or a buffer for temporarily storing the packet length value (Length_x). The third storage medium **46** can also be a volatile memory or a buffer for temporarily storing the examining value (CRC_x). A storage medium for temporarily storing the PES packet (Px), the packet length value (Length_x), and the examining value (CRC_x) can be regarded as an implementation according to the present invention.

[**0038**] Furthermore, in the above-mentioned illustration of the flowchart **200** in **FIG. 2**, assuming that the data-extracting system **100** extracts a payload of a PES packet from a TS. As mentioned above, the data-extracting system **100** of the present invention is capable of extracting payload of a PES packet from a PS. The operation is simply illustrated in the following.

[**0039**] In step **204**, when the packet source device **20** receives a PS, the filter **22** is used for filtering the PS. In this embodiment, the filter **22** is a PS to PES filter for filtering out the needed PS packets from the PS and recombining the PS packet into a PES packet (Py). And then, the PES packet (Py) is transmitted into the packet processing device **30** to be processed and stored in the storage device **40**.

[**0040**] In step **206**, the packet processing device **30** utilizes the calculating device **30** to calculate the packet length value (Length_y) of the PES packet (Py) when receiving the

PES packet (Py). Then, in step **208**, the packet processing device **30** utilizes the CRC examiner **34** to examine the correctness of the CRC stored in the header of the PES packet (Py) for generating a corresponding examining value (CRC_y) and storing the examining value (CRC_y) in the storage device **40**.

[**0041**] Similarly, in step **210**, the controller **10** of the data-extracting system **100** reads the packet length value (Length_y), the examining value (CRC_y), and the header of the PES packet (Py) stored in the storage device **40** for controlling the transmitting interface **50** to output payload (Payload_y) the PES packet (Py) into a target device through DMA.

[**0042**] As mentioned above, the data-extracting system **100** processes a PS or a TS similarly. The only difference between them is the function of the filter **22**. In fact, the packet source device **20** is capable of comprising a PID filter and a PS to PES filter. When the packet source device **20** receives a stream, the packet source device **20** has to determine whether the stream is a PS or a TS, and then selects the corresponding filter to process the received stream for providing a PES packet. And then step **206**~step **210** in flowchart **200** are executed so that the data-extracting system **100** outputs the payload of the PES packet through DMA.

[**0043**] Please note that in the preferred embodiment according to the present invention, the packet processing device **30** utilizes the CRC examiner **34** to examine the correctness of the CRC and generate a corresponding examining value for the controller **10** to control the operation of transmitting interface **50** in step **208**. The CRC examiner **34** is used for examining and reducing errors during packets transmission. However, the present invention packet processing device **30** is not limited to having the CRC examiner **34**. This also means that the step **208** can be ignored. At this time, in step **210**, the controller **10** controls the transmitting interface **50** to output payload (Payload_x) of the PES packet (Px) according to the packet length value (Length_x).

[**0044**] Additionally, the data-extracting system **100** is capable of being implemented using software program code. The devices of the data-extracting system **100** can be all implemented as program code. So, when a computer system executes the program code, the computer is capable of transmitting the payload of a PES packet from a PS or TS according to the present invention.

[**0045**] As mentioned above, no matter whether the packet length field of a PES packet header is defined as 0 or not, the present invention data-extracting system is capable of utilizing the calculating device **32** to calculate the actual packet length of the PES packet when filtering out the PES packet. Therefore, the present invention is capable of efficiently getting the information of packet length of the PES packet and transmitting payload normally, regardless of whether the packet length field of a PES packet header is defined as 0 or not.

[**0046**] In contrast to the related art, which cannot get the actual length of the PES when the packet length field of a PES packet header is defined as 0, the present invention can get the actual length of the PES packet so that the present invention has better transmitting efficiency and the data-extracting system and the method of extracting payload thereof are apparently improved.

[**0047**] Those skilled in the art will readily observe that numerous modifications and alterations of the device may be made while retaining the teachings of the invention. Accordingly, the above disclosure should be construed as limited only by the metes and bounds of the appended claims.

What is claimed is:

1. A method for extracting a payload of a packetized elementary stream packet (PES packet) from a packetized elementary stream (PES), the method comprising:

(a) utilizing a packet processing device to calculate a length of the PES packet to generate a corresponding packet length value; and

(b) outputting the payload of the PES packet according to the packet length value.

2. The method of claim 1, wherein step (b) further comprises:

utilizing a transmitting interface to output the payload of the PES packet.

3. The method of claim 2, further comprising:

utilizing a control circuit to control the transmitting interface to output the payload of the PES packet according the packet length value.

4. The method of claim 3, further comprising:

controlling the transmitting interface to output the payload of the PES packet according to an examining value corresponding to the correctness of a cyclic redundancy check (CRC) of the PES packet.

5. The method of claim 4, further comprising:

utilizing a cyclic redundancy check examiner to generate the examining value according to the correctness of the cyclic redundancy check.

6. The method of claim 4, further comprising:

utilizing a storage medium to store the PES packet, the packet length value, and the examining value.

7. The method of claim 4, further comprising:

utilizing a first storage medium to store the PES packet; and

utilizing a second storage medium to store the packet length value and the examining value.

8. The method of claim 4, further comprising:

utilizing a first storage medium to store the PES packet;

utilizing a second storage medium to store the packet length value; and

utilizing a third storage medium to store the examining value.

9. The method of claim 1 further comprising:

utilizing a storage medium to store the PES packet and the packet length value.

10. The method of claim 1 further comprising:

utilizing a first storage medium to store the PES packet; and

utilizing a second storage medium to store the packet length value.

11. A data-extracting system for extracting a payload of a packetized elementary stream packet (PES packet) from a transport stream (TS) or a program stream (PS) comprising:

a data source device for providing a PES packet;

a packet processing device electrically connected to the data source device for calculating a packet length of the PES packet to generate a packet length value;

a transmitting interface electrically connected to the packet processing device for receiving the PES packet from the packet processing device and outputting the payload of the PES packet; and

a controller for controlling the operation of the data-extracting system;

wherein the controller controls the transmitting interface to output the payload of the PES packet according to the packet length value.

12. The data-extracting system of claim 11, wherein the data source device comprises a packet identifier filter (PID filter) for filtering a transport stream to provide the PES packet.

13. The data-extracting system of claim 11, wherein the data source device comprises a PS-to-PES filter for filtering a program stream to provide the PES packet.

14. The data-extracting system of claim 11, wherein the packet processing device comprises:

a calculating device electrically connected to the data source device for calculating the packet length of the PES packet to generate the packet length value; and

a first storage medium electrically connected to the data source device and the transmitting interface for storing the PES packet and transmitting the PES packet to the transmitting interface;

wherein the first storage medium is used as a buffer between the data source device and the transmitting interface.

15. The data-extracting system of claim 14, wherein the packet length value is stored in the first storage medium.

16. The data-extracting system of claim 14, wherein the packet processing device further comprises a second storage medium electrically connected to the calculating device for storing the packet length value.

17. The data-extracting system of claim 14, wherein the packet processing device further comprises a cyclic redundancy check examiner electrically connected to the data source device for examining the correctness of the cyclic redundancy check to generate a examining value.

18. The data-extracting system of claim 17, wherein the controller controls the transmitting interface to output the payload of the PES packet according to the packet length value.

19. The data-extracting system of claim 17, wherein the examining value is stored in the first storage medium.

20. The data-extracting system of claim 17, wherein the packet processing device further comprises a second storage medium electrically connected to the calculating device for storing the examining value.

21. The data-extracting system of claim 17, wherein the packet processing device further comprises a third storage medium electrically connected to the cyclic redundancy check examiner for storing the examining value.

* * * * *