US006558430B1

(12) **United States Patent**
Nakaya et al.

(10) **Patent No.: US 6,558,430 B1**
(45) **Date of Patent: May 6, 2003**

(54) **AIR-CYLINDER APPARATUS FOR PROSTHETIC LIMB**

(75) Inventors: **Yoshiaki Nakaya**, Kobe (JP); **Tsutomu Togashi**, Kobe (JP); **Masahiko Okuda**, Kobe (JP); **Norio Shiraishi**, Kobe (JP)

(73) Assignee: **Nabco Limited**, Hyogo-ken (JP)

(*) Notice: Subject to any disclaimer, the term of this patent is extended or adjusted under 35 U.S.C. 154(b) by 204 days.

(21) Appl. No.: **09/707,011**

(22) Filed: **Nov. 6, 2000**

(30) **Foreign Application Priority Data**

Nov. 15, 1999 (JP) 11-324614

(51) **Int. Cl.**[7] **A61F 2/64**
(52) **U.S. Cl.** **623/44**; 188/313
(58) **Field of Search** 623/26, 39, 43, 623/44, 46; 188/301, 313, 322.13, 288

(56) **References Cited**

U.S. PATENT DOCUMENTS

3,863,274 A		2/1975	Glabiszewski	
4,775,037 A	*	10/1988	Stenberg	623/39 X
5,344,446 A		9/1994	Sawamura et al.	
5,405,407 A		4/1995	Kodama et al.	
5,517,898 A		5/1996	Kim et al.	
5,888,237 A		3/1999	Shiraishi et al.	

FOREIGN PATENT DOCUMENTS

DE	42 33 247 A1		10/1992	
EP	0 837 248 A2		4/1998	
GB	2 282 414 A		8/1994	
GB	2 338 653 A		6/1998	
JP	6-197918		7/1994	
JP	9-201377 A	*	8/1997	623/26
JP	11-19105 A	*	1/1999	623/26
WO	WO 95/26171		10/1995	

OTHER PUBLICATIONS

European Search Report for EP 00 30 9975 dated Mar. 5, 2001.

Patent Abstract for Japanese Patent Application No. 04359925 dated Dec. 29, 1992.

* cited by examiner

Primary Examiner—David H. Willse
(74) *Attorney, Agent, or Firm*—Frommer Lawrence & Haug LLP; Ronald R. Santucci

(57) **ABSTRACT**

There is provided an air-cylinder apparatus for use in a prosthetic limb capable of effectively adjusting the pressure characteristics over a wide range of walking speed. A second chamber **82** defined by a piston **113** is increased in pressure by air confined therein in accordance with the bending motion of the knee. Air is restricted from flowing out of the second chamber **82** by a constant throttle valve **140**. In addition, the second chamber **82** is divided into plural chambers **821**, **822** in accordance with increase in bending angle of the knee and air is restricted from flowing out of the newly divided chambers **821**, **822** by throttle valves corresponding thereto. The division of the second chamber **82** is achieved by mutual engagement between a projection **1140***b* on the piston side and a recess **1127** on the bottom part of a cylinder body.

10 Claims, 20 Drawing Sheets

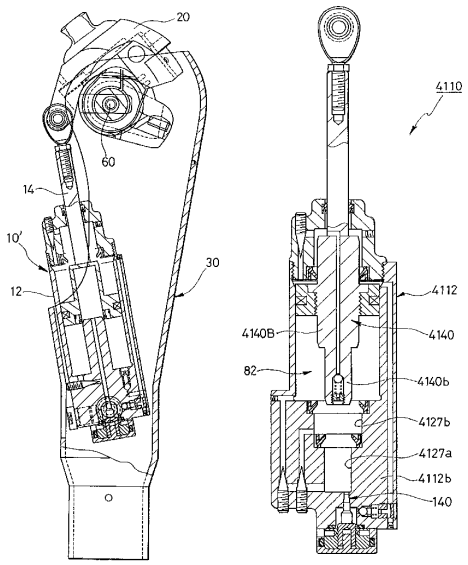

FIG.1

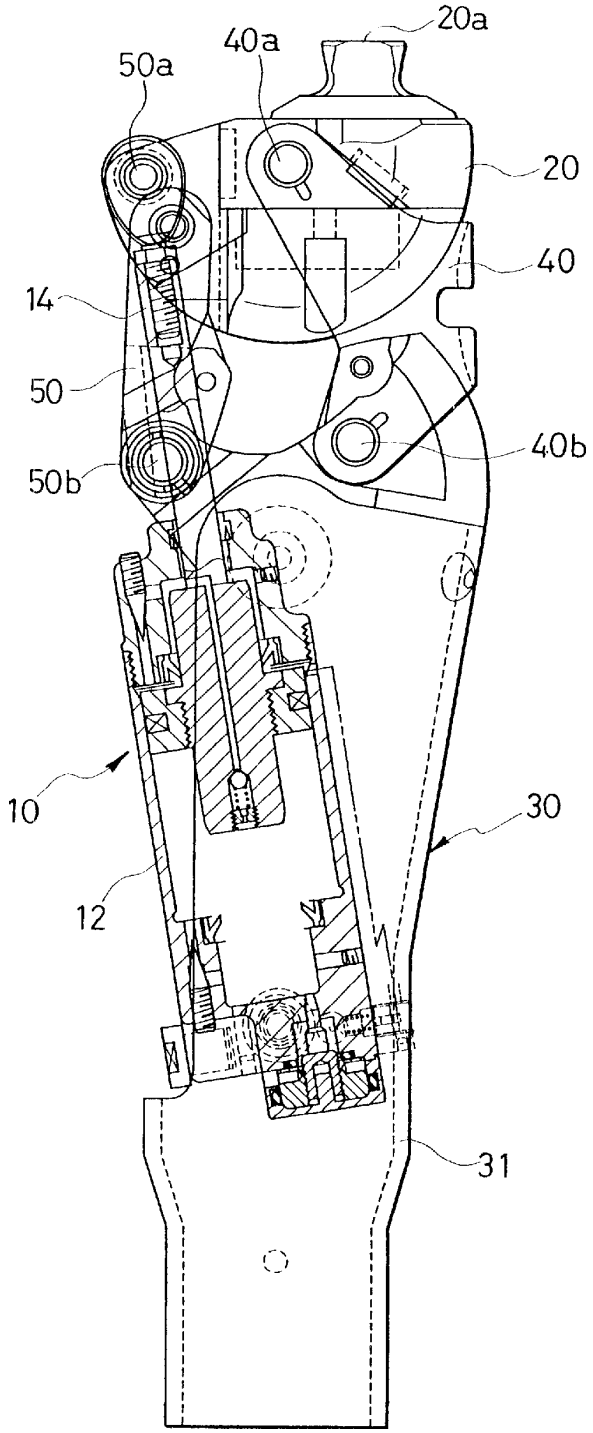

SRAM_FOX_CO_000176

FIG.2

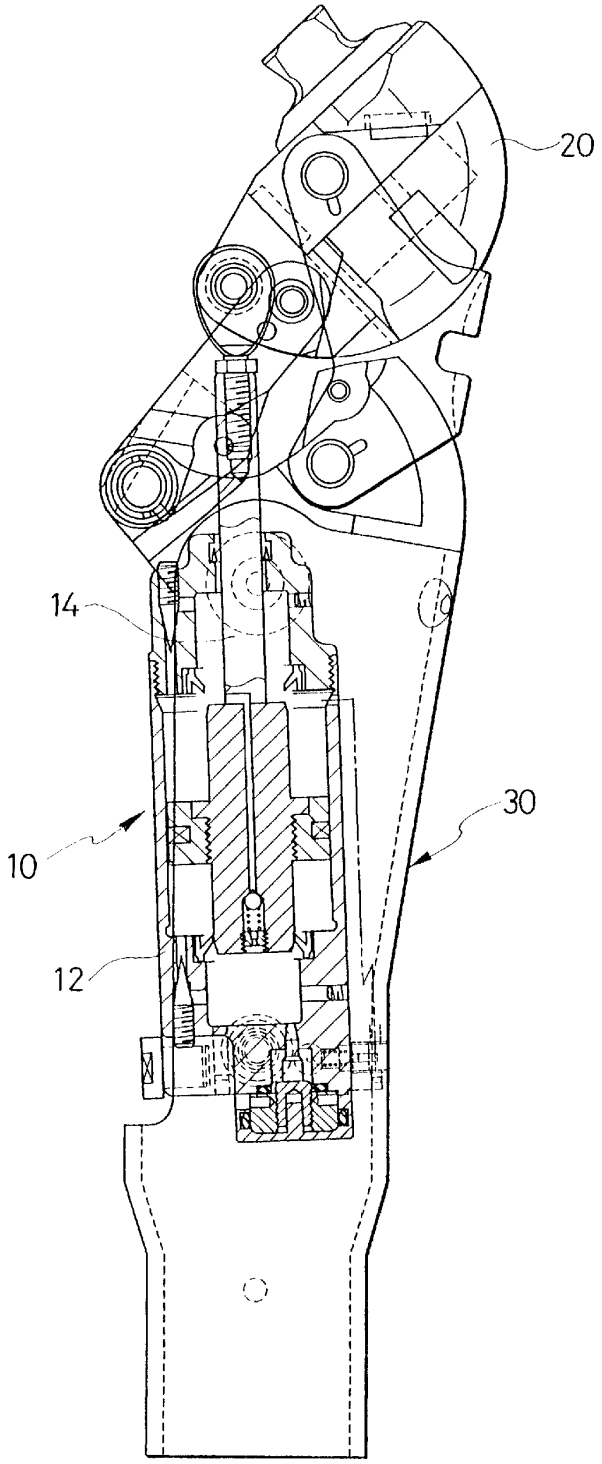

FIG.3

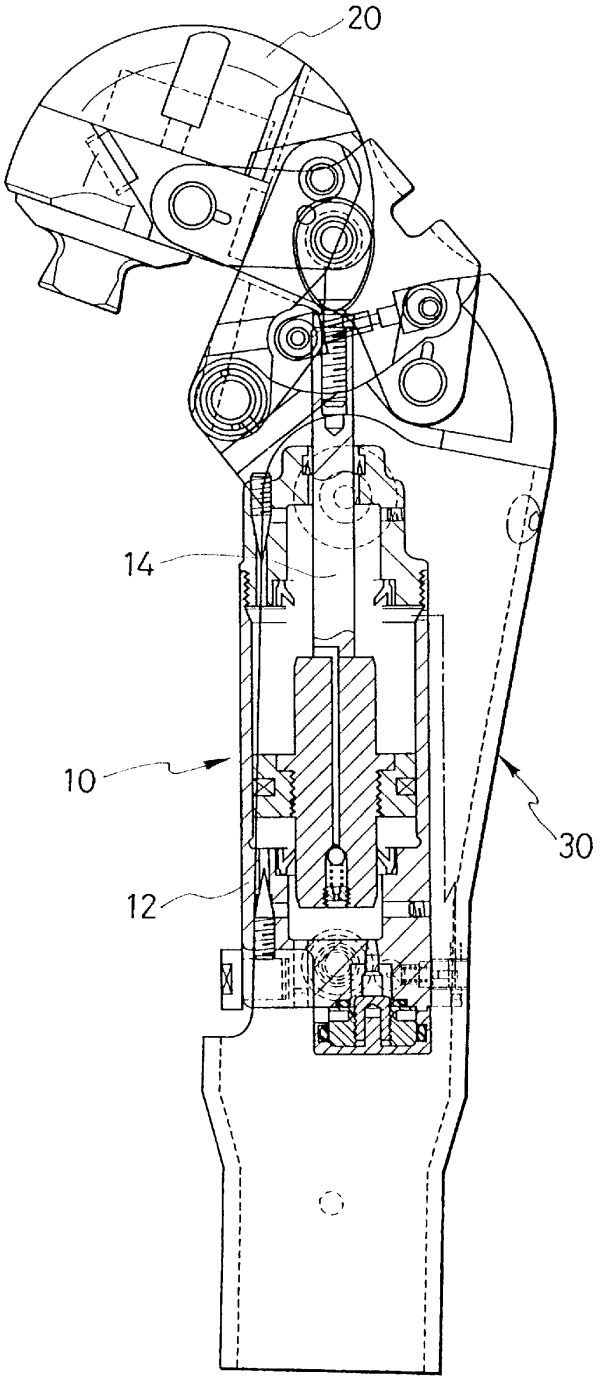

SRAM_FOX_CO_000178

FIG. 4

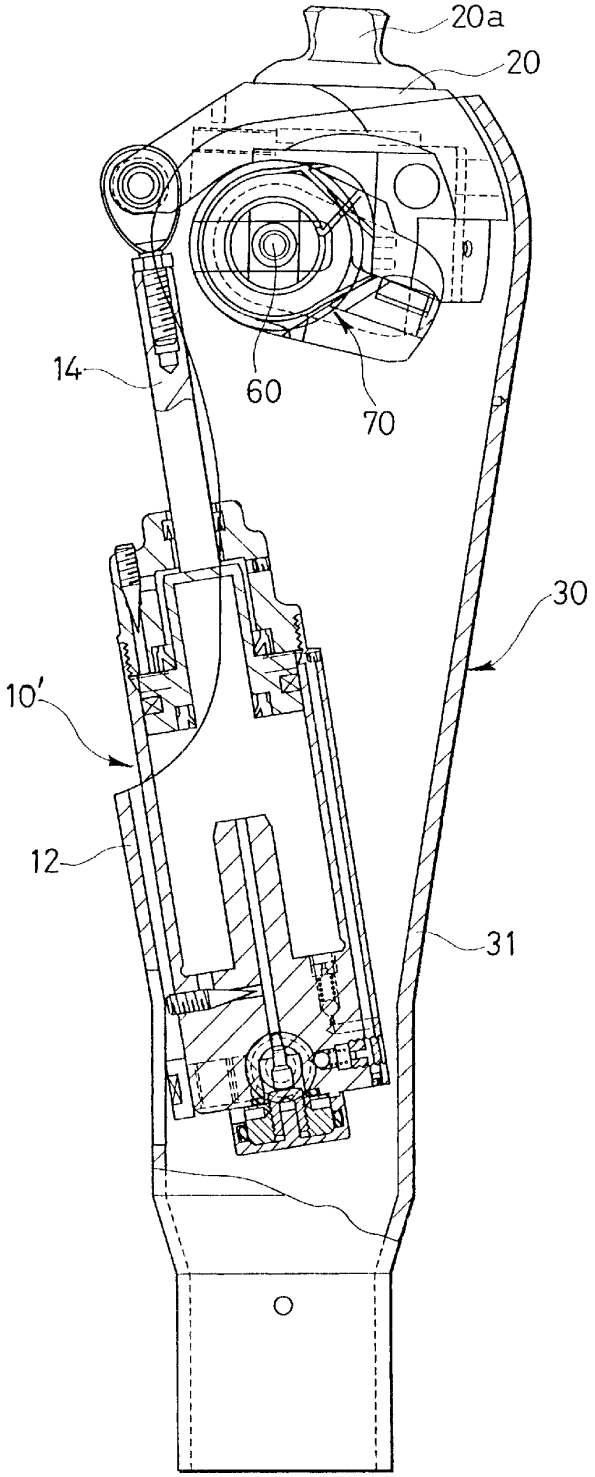

FIG.5

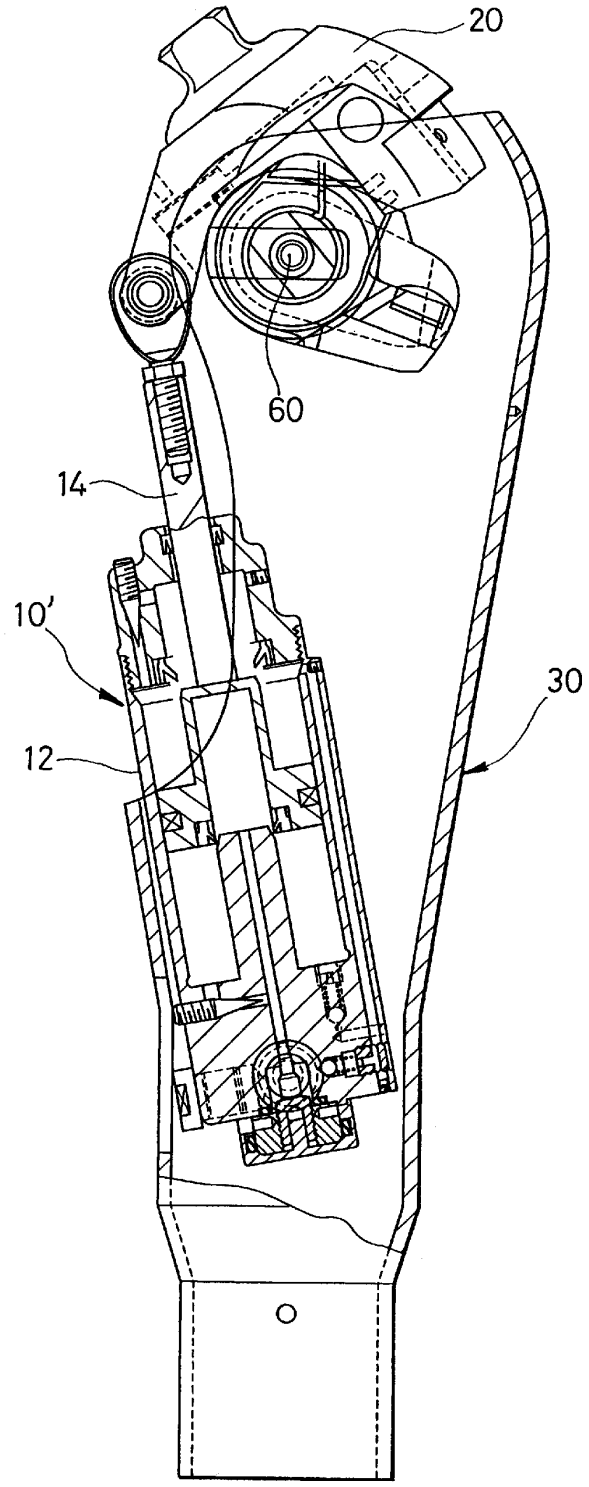

FIG. 6

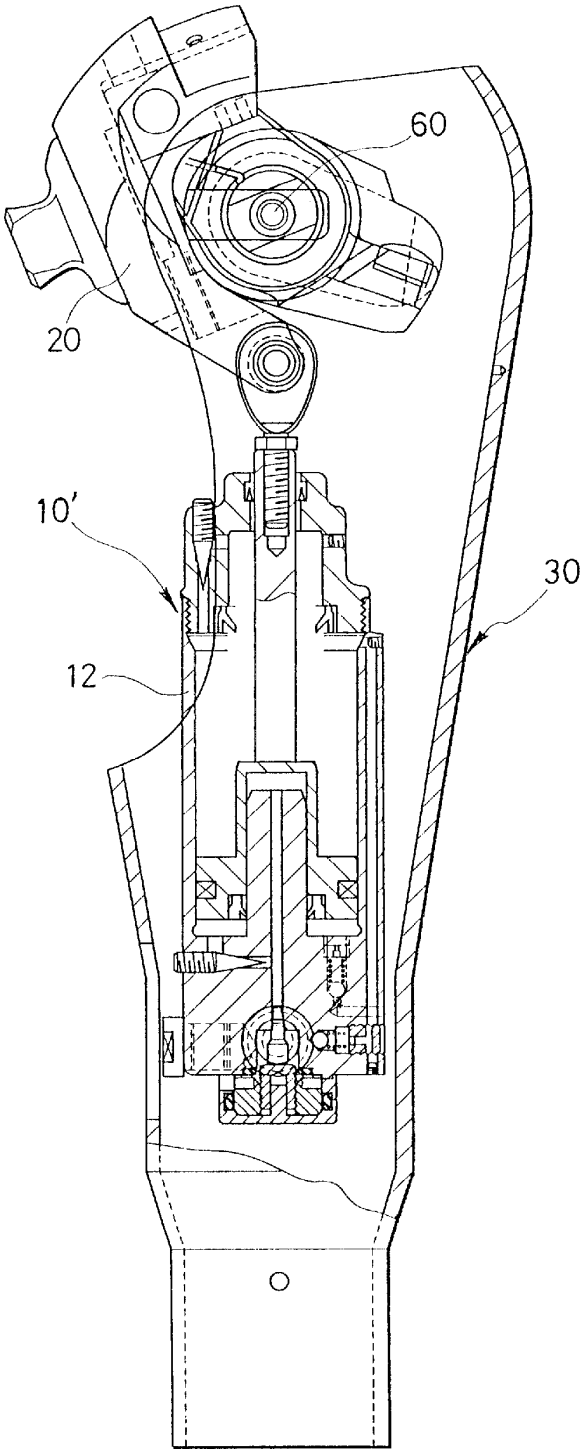

FIG. 7

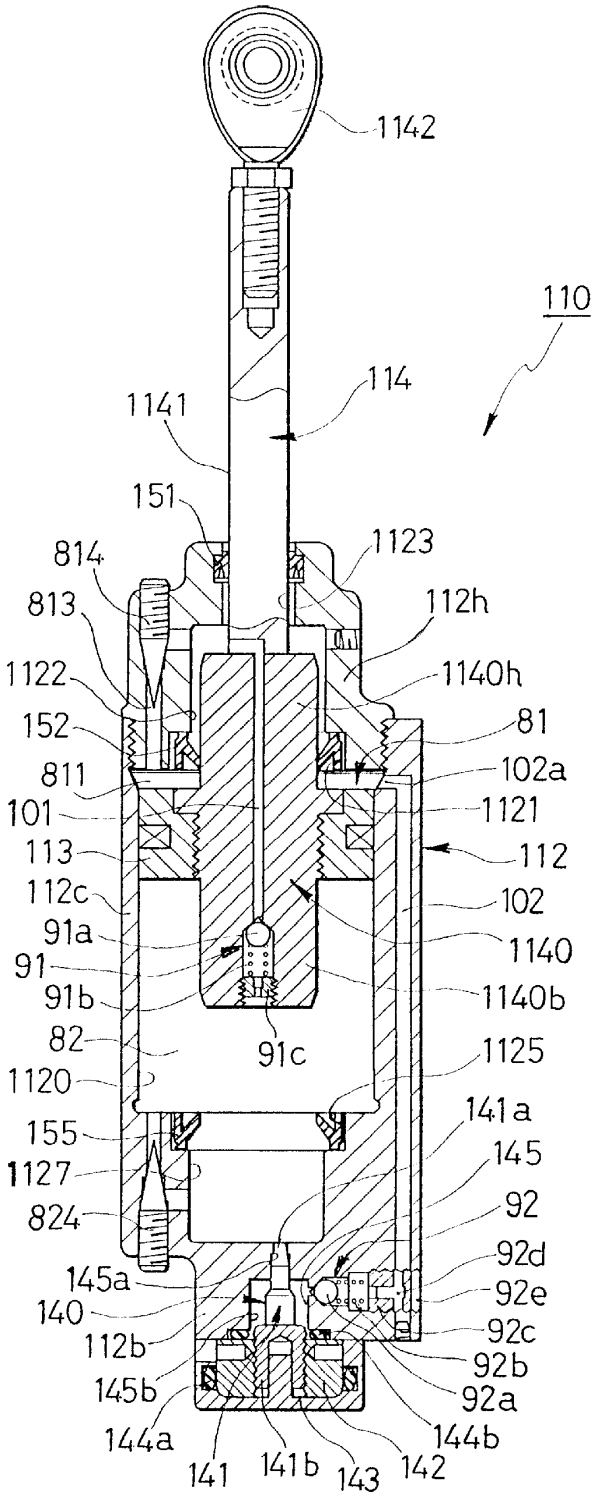

SRAM_FOX_CO_000182

FIG. 8

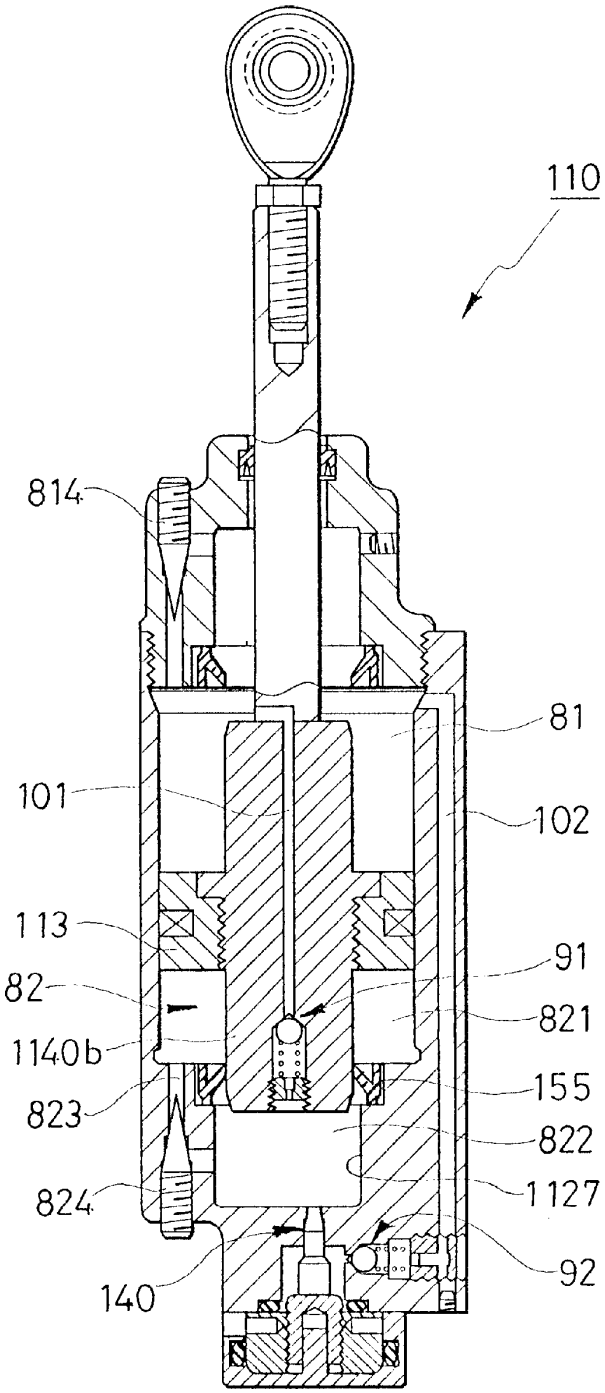

SRAM_FOX_CO_000183

FIG. 9

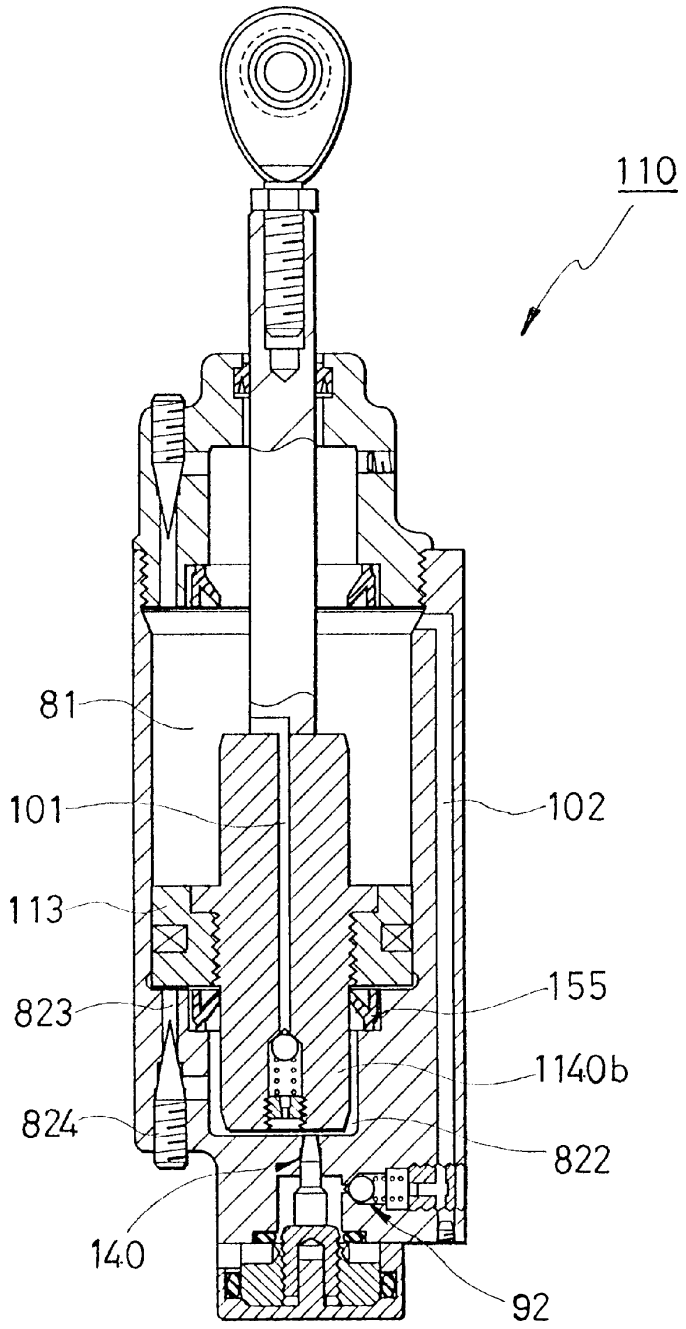

SRAM_FOX_CO_000184

FIG. 10

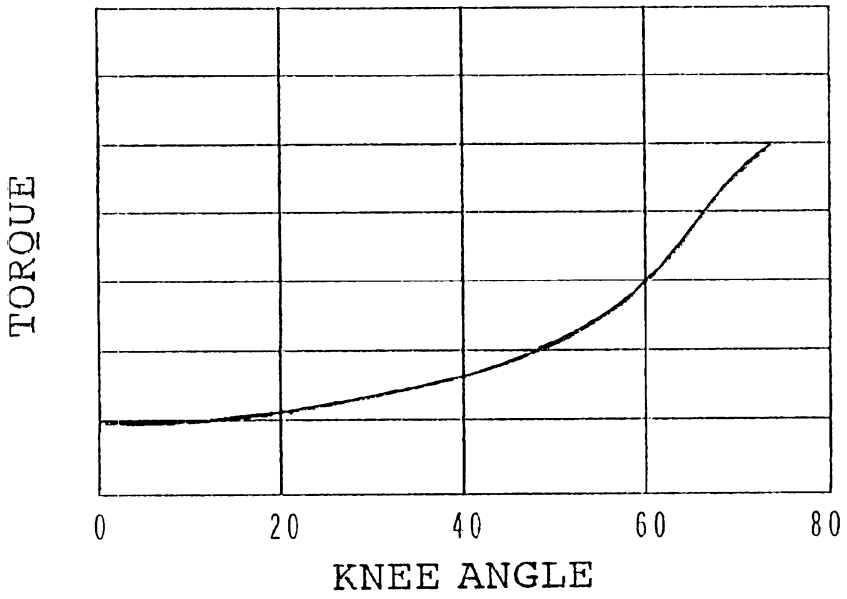

FIG.11

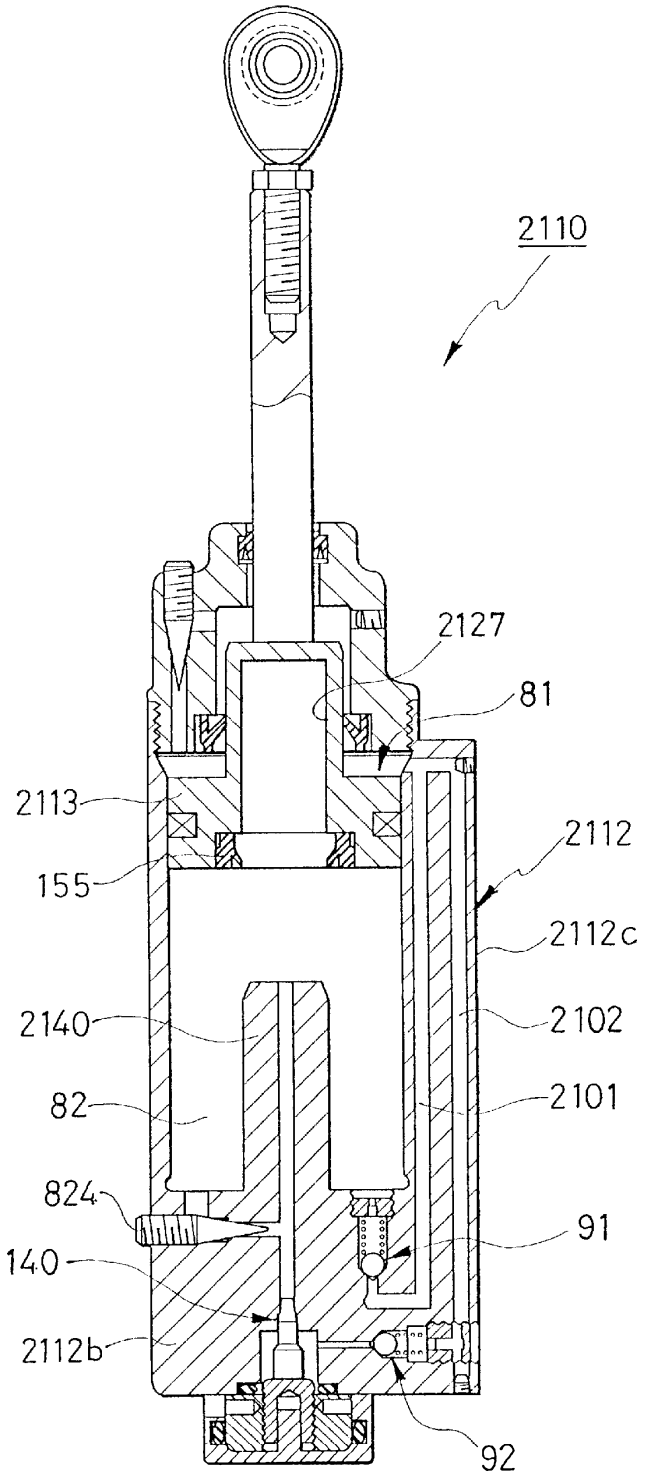

SRAM_FOX_CO_000186

FIG.12

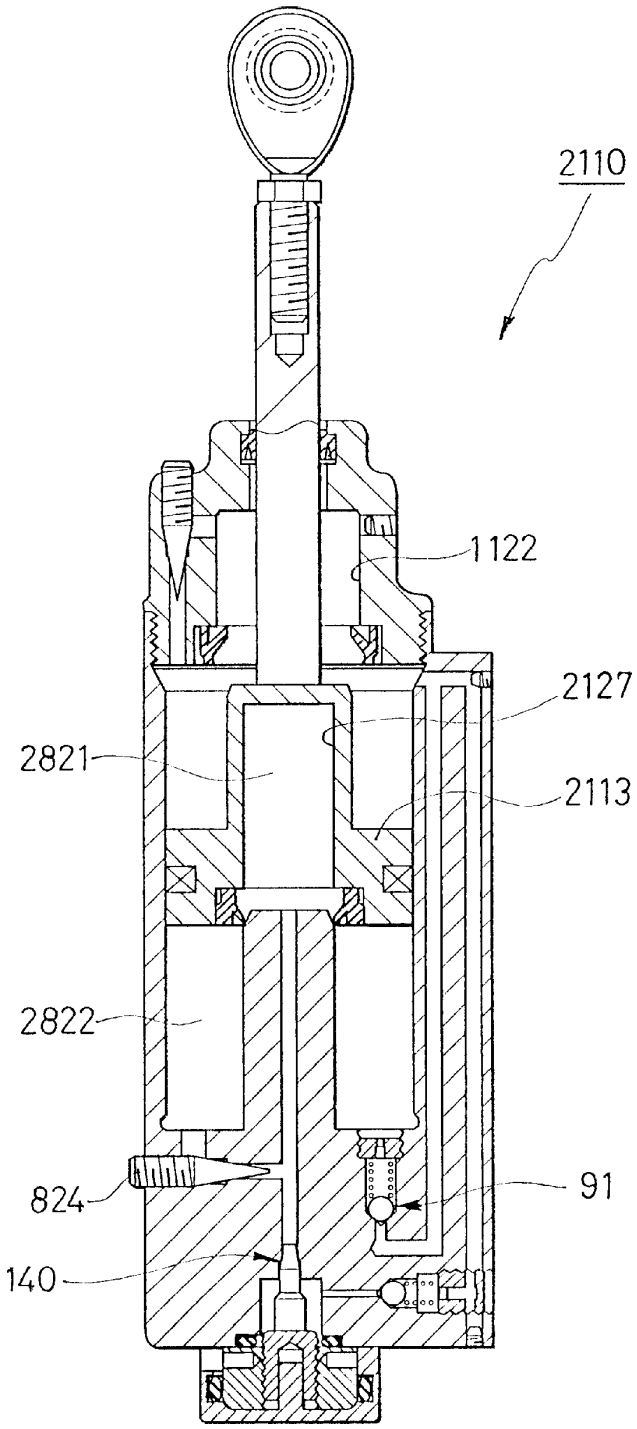

FIG. 13

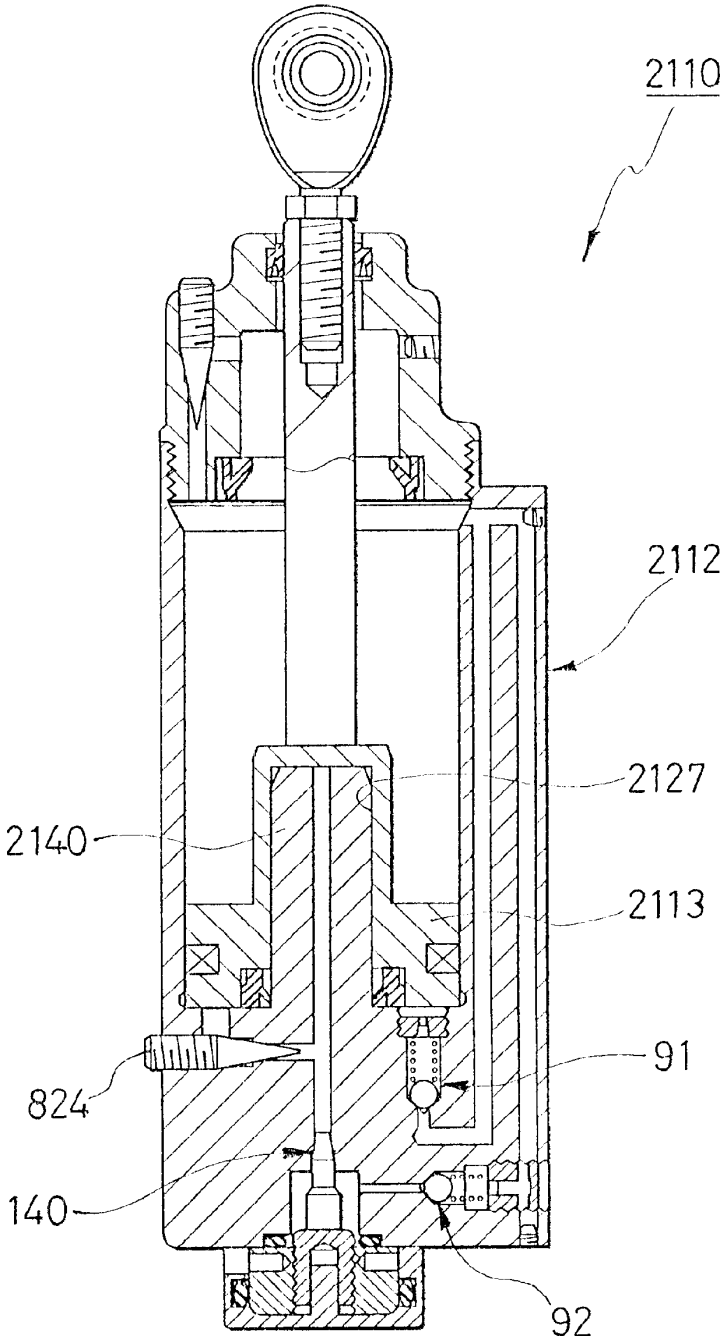

FIG.14

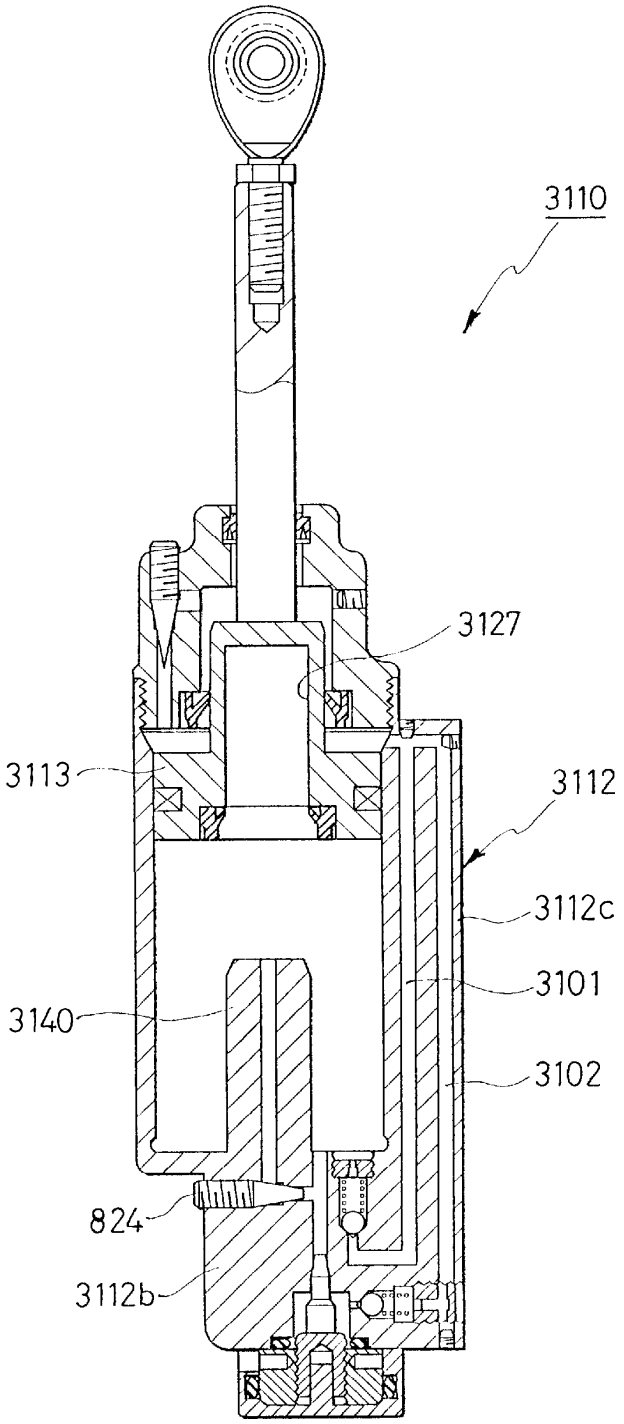

SRAM_FOX_CO_000189

FIG.15

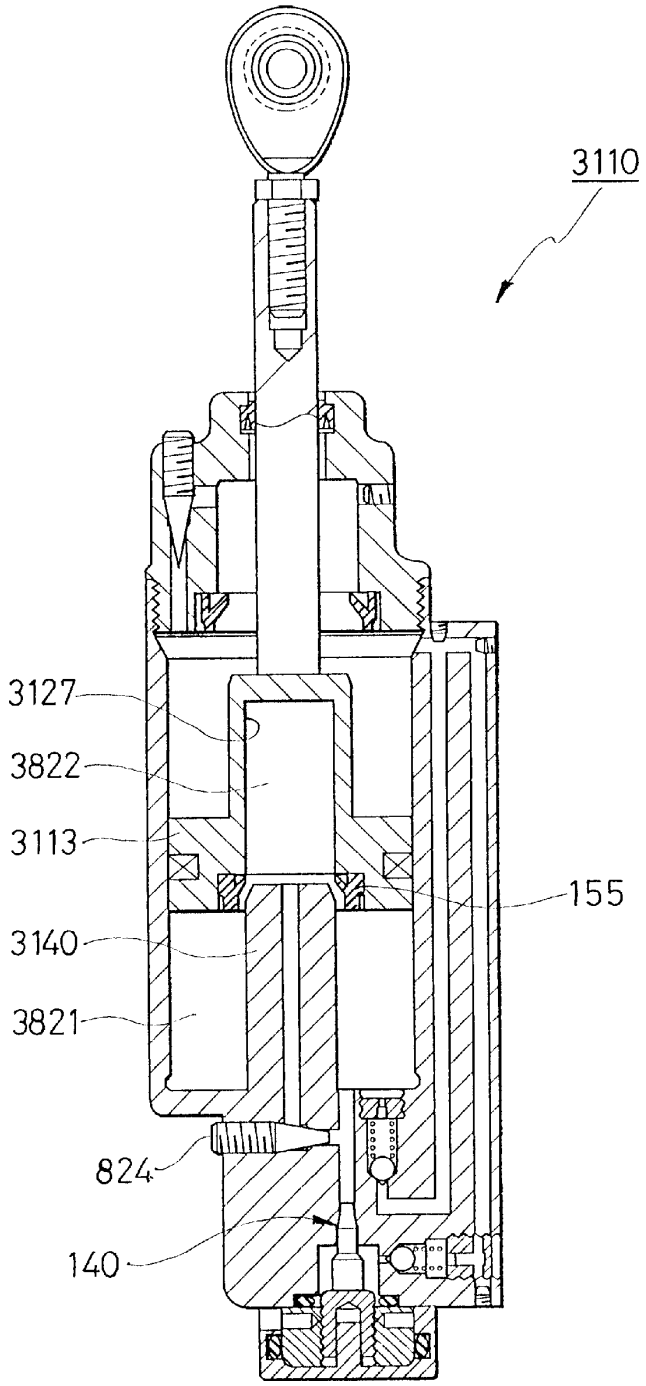

FIG.16

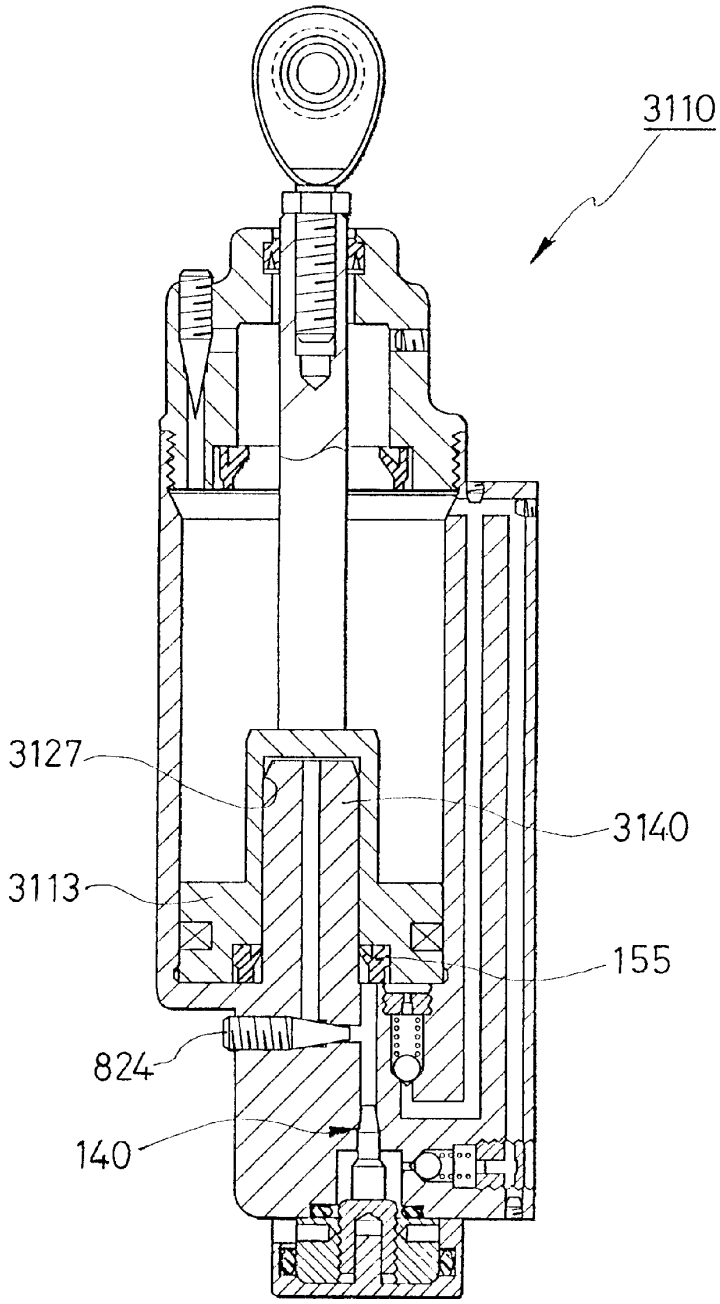

SRAM_FOX_CO_000191

FIG.17

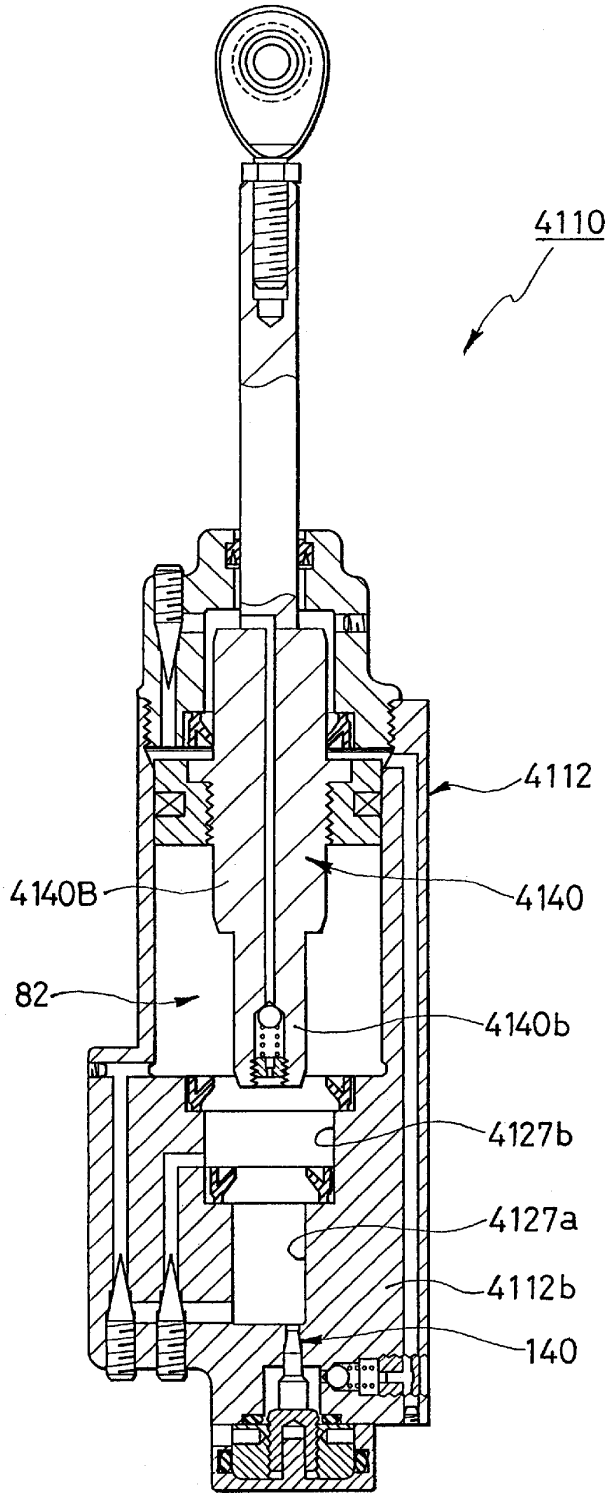

SRAM_FOX_CO_000192

FIG.18

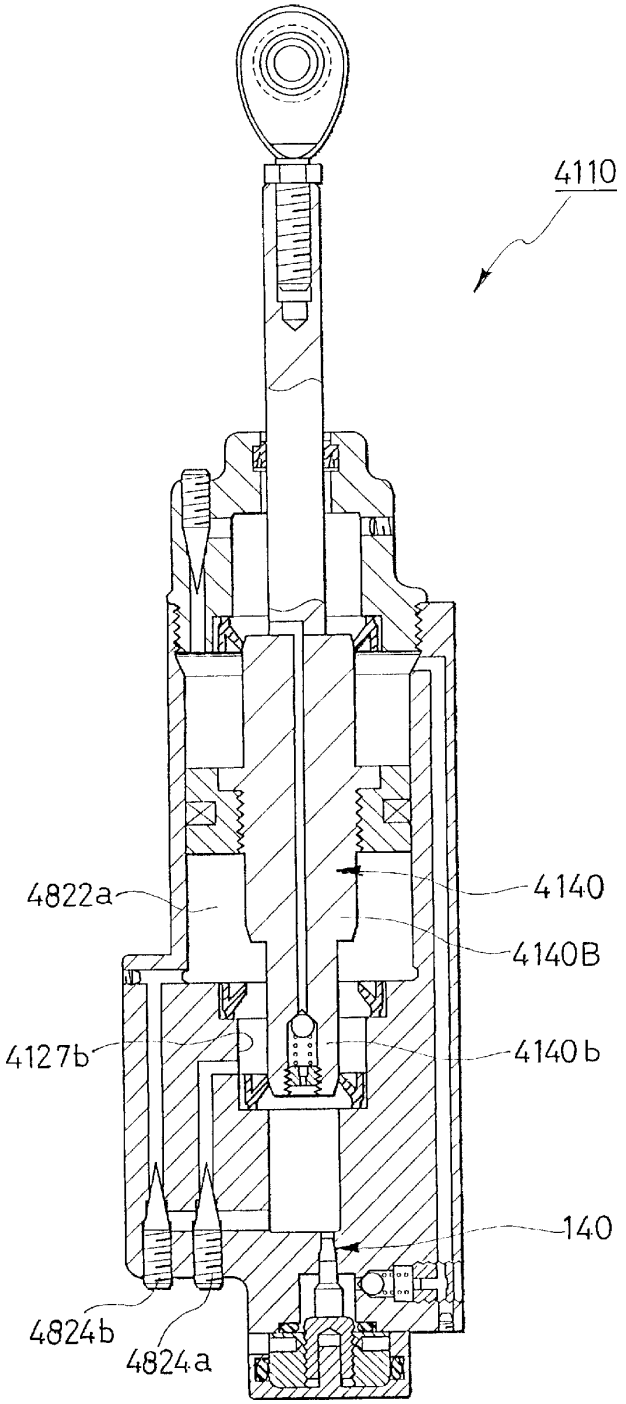

SRAM_FOX_CO_000193

FIG. 19

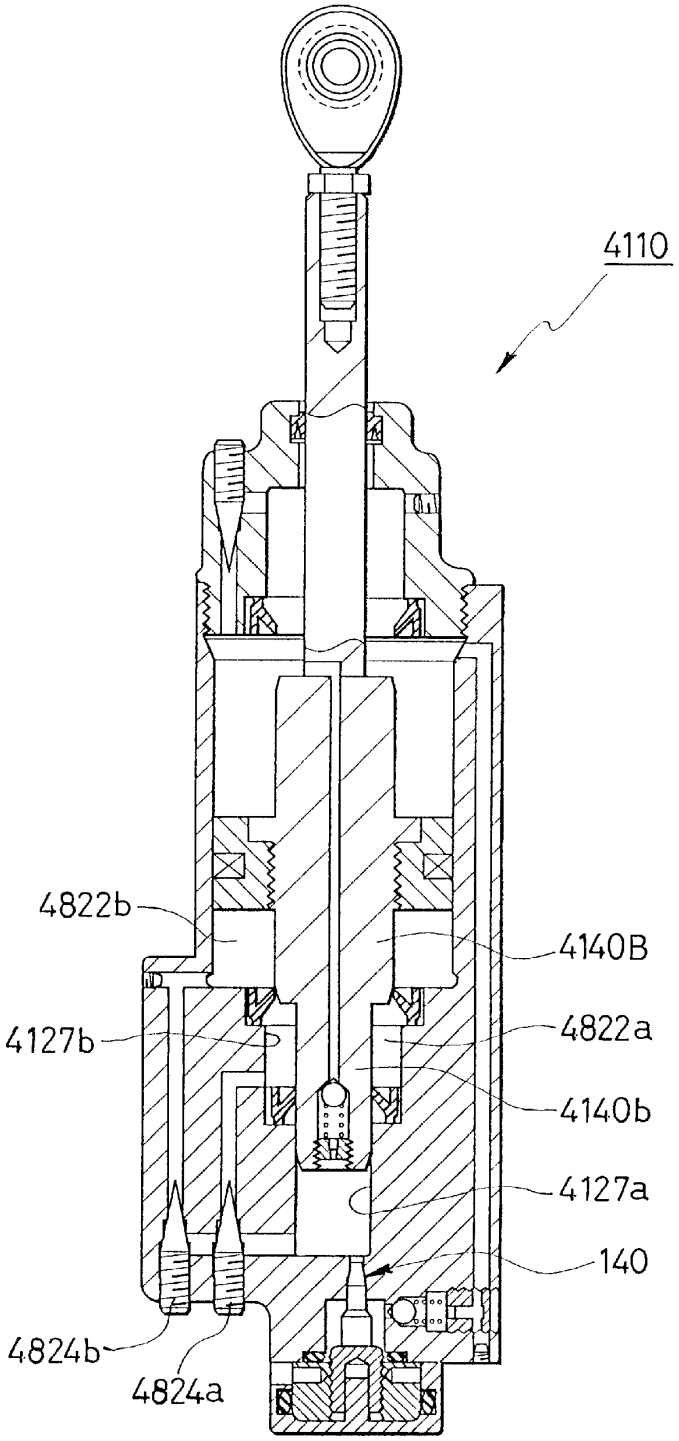

SRAM_FOX_CO_000194

FIG.20

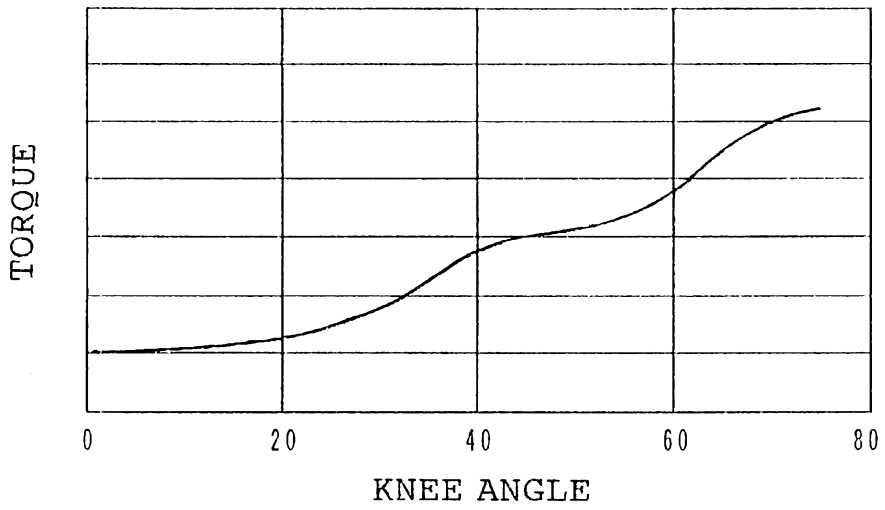

AIR-CYLINDER APPARATUS FOR PROSTHETIC LIMB

BACKGROUND OF THE INVENTION

This invention relates to an air-cylinder apparatus for use in a prosthetic limb designed for assisting the bending and stretching motion of an amputee's knee and more particularly to a technique capable of generating a proper resisting force in accordance with the bending motion of the knee when a prosthetic limb is in a swing phase in walking in which the prosthetic limb is left from a grounding surface such as, a floor surface.

Prosthetic limbs accompanying the bending and stretching motion of the knee are prosthetic limbs in which a femoral member and a crus member are oscillated relative to each other. Among them, there are prosthetic limbs of the type which includes an auxiliary apparatus for assisting the bending and stretching motion of the knee in order to attain a walking style (walking attitude) resembling a natural walking style. As the auxiliary apparatus, there are known a hydraulic cylinder apparatus and an air-cylinder apparatus. Comparing the two different types of cylinder apparatuses as an auxiliary apparatus, oil as working fluid of the hydraulic cylinder has almost no compressibility, while air as working fluid of the air-cylinder apparatus has compressibility. Therefore, with the use of the air-cylinder, there can be obtained a repulsive energy after the knee is bent to the maximum extent by the compressed energy generated by compression of air.

The specification of Japanese Patent Publication No. S52-47638 and FIGS. 2 and 3 of U.S. Pat. No. 5,405,407 show a first technique of an air-cylinder apparatus for use in a prosthetic limb. This technique includes a check valve within a piston and a needle valve as a throttle valve within a piston rod. Those valves are actuated to compress a chamber within the air-cylinder when the knee is bent and the flow of air out of the chamber is restricted by the throttle valve. However, the flow of air is restricted by a single throttle valve and the degree of opening of the throttle valve is kept constant during walking. For this reason, the bending motion of the knee cannot be controlled appropriately in accordance with walking speed. This follows that the first technique cannot cope with such a wide range of walking speed as slow walking, normal walking, fast walking and tripping.

In contrast, Japanese Patent No. 2,501,346 and U.S. Pat. No. 5,344,446 based thereon discloses a technique for adjusting the degree of opening of a throttle valve for restricting the flow of air in accordance with walking speed using a computer. This second technique can control the bending motion of the knee appropriately in accordance with walking speed. The wearer of the prosthetic limb can attain a natural walking attitude over a wide range of walking speed. However, this second technique has such shortcomings in that each means for controlling and driving is necessarily required for adjusting the throttle valve automatically and therefore, the prosthetic limb becomes complicated in structure and increased in cost.

In order to attain a natural walking attitude over a wide range of walking speed while restraining increase in cost, it can be contemplated to make the prosthetic limb entirely mechanically in structure without a need of a provision of a computer for controlling. A third technique, which is disclosed by National Publication No. H08-511190 (corresponding to WO95/26171) and U.S. Pat. No. 5,092,

902, can be applied to an air-cylinder apparatus, although the third technique is directed to a hydraulic cylinder apparatus and not to an air-cylinder apparatus. In the third technique, the throttle valve is provided with a plurality of throttle holes arranged in a direction of movement of a piston such that the throttle valves are sequentially closed in accordance with movement of the piston. According to this technique, resisting force against flow can be enlarged by intensifying the throttling action of the throttle valve as the bending degree of the knee is increased. However, because a throttle area is, either digitally or steppingly, varied in accordance with movement of the piston, pressure characteristics of the cylinder are also steppingly varied, thereby deteriorating the wearer's feeling of walking. Moreover, in this type of a cylinder for use in a prosthetic limb, it is necessary to adjust the pressure characteristics of the cylinder for each wearer. In the case where there is a provision of only one pressure chamber, it is difficult to meet with the requirement for adjustment of the pressure characteristics of the cylinder for each wearer.

SUMMARY OF THE INVENTION

It is, therefore, a first object of the present invention to provide an air-cylinder apparatus for use in a prosthetic limb in which pressure characteristics can effectively be adjusted over a wide range of walking speed.

It is a second object of the present invention to provide an air-cylinder apparatus for use in a prosthetic limb in which a natural walking attitude can be obtained in a wide range of walking speed without deteriorating the wearer's feeling of walking.

A third object of the present invention is to provide an air-cylinder apparatus for use in a prosthetic limb in which a throttle valve portion is stable in construction so that an accurate pressure controlling can assuredly be obtained in accordance with walking speed.

To achieve the above objects, the way the inventor(s) of the present invention thought is as follows. Basically, the interior of a cylinder body is divided into two chambers by a piston as in the related art. The divided chambers include a first chamber which is located on the head side and a second chamber which is located on the bottom side. The first and second chambers are communicated with each other through two passages. The first passage includes a first check valve for permitting a flow of air from the first chamber towards the second chamber. By permitting the flow of air from the first chamber towards the second chamber, the first passage enables the knee to be bent and besides, the first check valve confines the air, which has flowed into the second chamber, therein. The second passage includes a constant throttle valve for normally restricting a flow of air from the second chamber towards the first chamber. The constant throttle valve has the role for normally restricting the flow of air from the second chamber towards the first chamber even when the bending state of the knee is changed.

An air-cylinder apparatus for use in a prosthetic limb according to the present invention further comprises, in order to increase an internal pressure of the second chamber when the knee is bent, the following component elements.

(A) division means for dividing the second chamber, which is located on the bottom side, into plural chambers including a predetermined chamber confronting an opening for intercommunicating the second chamber with the constant throttle valve in accordance with increase in bending angle of the knee, the division means being provided at a

bottom part of the cylinder body with a projection or a recess and at one surface, facing the bottom part, of the piston with a counterpart projection or a recess; and

(B) an auxiliary passage for communicating each and all of the plural chambers divided by the division means only excluding the predetermined chamber with the first chamber through throttle valves, respectively.

In the air-cylinder apparatus for use in a prosthetic limb according to the present invention, it is not only arranged such that the flow of air out of the second chamber, in which air is confined in accordance with the bending motion of the knee and internal pressure is increased, by the constant throttle valve but also that the second chamber is divided into plural chambers in accordance with increase in bending angle of the knee and air is restricted from flowing out of those divided chambers by throttle valves corresponding to the divided chambers. The divided plural chambers include not only the predetermined chamber confronting the opening for communication with the constant throttle valve but also other chambers concentric therewith. In order to accurately control the pressure characteristics over a wider range of walking speed, an increased number of divisions is preferable. Actually, the number of divisions is 2 to 5 and normally, the proper number of divisions is 2 to 3. The time point for dividing the second chamber into plural chambers can properly be changed in accordance with the number of divisions. In the case where the number of divisions is 2, the time point for division is at a stage where a bending angle of the knee exceeds 40 to 60 degrees (for example, 50 degrees) for normal walking. In the case where the number of divisions is 3, the time point is not only at a stage where the bending angle exceeds, for example, 50 degrees as mentioned but also at a stage where the bending angle is smaller, for example, 30 degrees, than 50 degrees. At the respective time points, the piston and the bottom part of the cylinder body are engaged with each other through the projection and the recess, thereby defining new chambers within the second chamber. In order to hermetically close the newly defined chambers, the engagement projection and recess are provided with a seal member such as a lip type seal ring. In order to generate a higher pressure in the second chamber at the time of faster walking speed, in addition to a provision of the constant throttle valve, the second passage is preferably provided with a second check valve for permitting the flow of air from the second chamber towards the first chamber and for prohibiting the flow of air in the reversed direction.

Most preferably, the throttle valve of the auxiliary passage is communicated with the first chamber through the predetermined chamber and the constant throttle valve. By doing so, the throttle valves for the newly divided chambers defined within the second chamber are interposed between the predetermined chamber and the newly divided chambers. Since pressure is generated, under the effect of the constant throttle valve, in the predetermined chamber prior to the time point for division, pressure in the newly divided chambers is not increased abruptly. As a result, due to characteristics of the air-cylinder apparatus, a repulsive force is not generated abruptly but it is generated gradually. For this reason, the wearer of the prosthetic limb can walk with a feeling of natural walking without a sense of incompatibility.

As the constant throttle valve and the throttle valve, various kinds of throttle valves can be used. Among them, a screwing type needle valve is most preferable. The screwing type needle valve is properly adjusted in opening degree through rotation of the screw (i.e., by converting a rotary motion to a linear motion) and can be used as a fixed throttle valve having a constant throttling amount. Since the fixed throttle valve is of a construction in which no movable valve body and no spring is used, a stable controlling can be made in a movable prosthetic limb.

BRIEF DESCRIPTION OF THE DRAWINGS

FIG. **1** is a view showing one form in which the present invention is applied to a prosthetic limb having a multi-axis knee joint and a view showing a state in which the knee is fully stretched;

FIG. **2** is a view showing a state in which the knee of FIG. **1** is slightly bent;

FIG. **3** is a view showing a state in which the knee of FIG. **1** is bent to the maximum extent;

FIG. **4** is a view showing one form in which the present invention is applied to a prosthetic limb having a single-axis knee joint and a view showing a state in which the knee is fully stretched;

FIG. **5** is a view showing a state in which the knee of FIG. **4** is slightly bent;

FIG. **6** is a view showing a state in which the knee of FIG. **4** is bent to the maximum extent;

FIG. **7** is a view showing a first embodiment of the present invention and a sectional view showing a state in which the knee is fully stretched;

FIG. **8** is a view showing a state in which the knee of FIG. **7** is slightly bent;

FIG. **9** is a view showing a state in which the knee of FIG. **7** is bent to the maximum extent;

FIG. **10** is a graph showing pressure characteristics of the first embodiment;

FIG. **11** is a view showing a second embodiment of the present invention and a sectional view showing a state in which the knee is fully stretched;

FIG. **12** is a view showing a state in which the knee of FIG. **11** is slightly bent;

FIG. **13** is a view showing a state in which the knee of FIG. **11** is bent to the maximum extent;

FIG. **14** is a view showing a third embodiment of the present invention and a sectional view showing a state in which the knee is fully stretched;

FIG. **15** is a view showing a state in which the knee of FIG. **14** is slightly bent;

FIG. **16** is a view showing a state in which the knee of FIG. **14** is bent to the maximum extent;

FIG. **17** is a view showing a fourth embodiment of the present invention and a sectional view showing a state in which the knee is fully stretched;

FIG. **18** is a view showing a state in which the knee of FIG. **17** is slightly bent;

FIG. **19** is a view showing a state in which the knee of FIG. **17** is bent to the maximum extent; and

FIG. **20** is a graph showing pressure characteristics of the fourth embodiment.

DETAILED DESCRIPTION OF THE EMBODIMENTS

Before describing the embodiments of the present invention, a relation between a prosthetic limb and an air-cylinder apparatus will be described with reference to FIGS. **1** to **6**.

The illustrated prosthetic limb is a femoral prosthetic limb for a person having no knee. FIGS. **1** to **3** show a prosthetic

limb with a multi-axis knee joint and FIGS. **4** to **6** show a prosthetic limb with a single-axis knee joint. In those Figures, FIGS. **1** and **4** show a state in which the knee is stretched and thus the bending angle is zero, FIGS. **2** and **5** show a state in which the knee is slightly bent, and FIGS. **3** and **6** show a state in which the knee is bent to the maximum extent. Air-cylinder apparatuses **10, 10'** of the present invention can be applied to a prosthetic limb with a multi-axis knee joint and also to a prosthetic limb with a single-axis knee joint. Although the air-cylinder apparatuses **10, 10'** of the present invention are assigned with reference numerals **10, 10'** only for the sake of convenience of explanation, first to fourth embodiments as later described can be applied as those air-cylinder apparatuses. The multi-axis knee joint is difficult to be applied to an air-cylinder apparatus having a long stroke because it includes a link mechanism and therefore, there is no spatial allowance at the knee joint area. In contrast, the single-axis knee joint has a comparatively large spatial allowance at the knee joint area when compared with the multi-axis knee joint although there is provided a load-brake around the single-axis, and therefore, it can effectively be applied to an air-cylinder apparatus having a long stroke, too.

Any of the above prosthetic limbs is provided at an upper part thereof with a femoral member **20** which is made of aluminum alloy. The femoral member **20** is in the form of a knee and integrally includes a connecting portion **20***a* for connecting a socket, not shown, to a part thereof. The socket receives therein an amputated end of the limb of a person who wears the prosthetic limb and transmits a load of the wearer to the femoral member **20**. At a lower part of the femoral member **20**, there is a crus member **30**. A chief member composing the crus member **30** is a frame **31** having a hollow interior and extending towards the foot part from the knee part. The crus member **30** and the femoral member **20** can be bent and stretched by the knee joint. The multi-axis knee joint shown in FIGS. **1** to **3** includes a front link **40** located on a front side of the knee and a rear link **50** located on a rear side of the knee. The front and rear links **40, 50** extend in an up and down direction when the knee is in a stretched state and their upper end parts **40***a*, **50***a* are rotatably connected to the femoral member **20**. Lower end parts **40***b*, **50***b* of the front and rear links **40, 50** are rotatably connected to the crus member **30**. By this, the femoral member **20**, the front link **40**, the rear link **50** and the crus member **30** constitute a constrained chain capable of making only a constant motion. On the other hand, in the prosthetic limb having a single-axis knee joint shown in FIGS. **4** to **6**, the femoral member **20** and the crus member **30** are rotatably connected together by a knee pin **60** disposed at the knee part. Around the knee pin **60**, there is provided a load brake **70** for generating a braking force in response to the load of the wearer applied thereto. The load brake **70** is of the same known type as disclosed in U.S. Pat. No. 3,863,274 (corresponding to Japanese Patent Publication No. S52-46432), in which in response to the load of the wearer applied thereto, a through-hole formed in a brake block is reduced in diameter, thereby generating a braking force.

In contrast to the prosthetic limb thus constructed, the air-cylinder apparatuses **10, 10'** are each supported at a cylinder bottom of the cylinder body **12** by a frame **31** through pin connection and are each rotatably connected at one end portion of a piston rod **14** extending outward from the cylinder head of the cylinder body **12** to the femoral member **20**. The air-cylinders **10, 10'** are each kept in the hollow frame **31** irrespective of the bending degree of the knee. The air-cylinders **10, 10'** assist the bending and stretching motion of the knee so that the wearer of the prosthetic limb can walk in a natural attitude. As the assisting functions of the air-cylinder apparatuses **10, 10'**, there are a first function for applying a resisting force against the bending motion of the knee at the bending time of the knee, a second function for swinging out the crus member forward with an accelerating speed after the knee is bent, and a third function for applying a cushioning force at a final stage of the stretching motion. According to this invention, the first and second functions, in particular, of the air-cylinder apparatuses **10, 10'** can be optimized in accordance with the walking speed.

First Embodiment

FIGS. **7** to **9** show an air-cylinder apparatus **110** according to a first embodiment of the present invention. Each of those Figures is corresponding one of FIGS. **1** to **3** or FIGS. **4** to **6**. FIG. **7** shows a state in which the knee is fully stretched and the bending angle is zero, FIG. **8** shows a state in which the knee is slightly bent, and FIG. **9** shows a state in which the knee is bent to the maximum extent. All other embodiments to be described later are also shown in those three states.

The air-cylinder apparatus **110** comprises a cylindrical cylinder body **112** which is made of aluminum alloy or synthetic resin. The cylinder body **112** includes a cylinder tube **112***c* having a uniform inside diameter, a head part **112***h* located at one end of the cylinder tube **112***c* and adapted to close this end, and a bottom part **112***b* located at the other end of the cylinder body **112***c* and adapted to close this end. In order to set up parts, such as a piston, within the cylinder body **112**, at least one of the head part **112***h* and the bottom part **112***b* (in general, head part **112***h*) can be removed from the cylinder tube **112***c*. Normally, the head part **112***h* is threadingly engaged with the cylinder tube **112***c*.

The interior of the cylinder body **112** is divided, by the piston **113**, into a first chamber **81** located on the head side and a second chamber **82** located on the bottom side. The piston **113** is fitted into the cylinder tube **112***c* for movement in the axial direction. The piston **113** is integrally supported by the piston rod **114**. The piston rod **114** integral with the piston **113** comprises an enlarged-diameter section **1140** for supporting the piston **113**, and a reduced-diameter section **1141** extending from one end of the enlarged-diameter section **1140** and a reduced-diameter rod part **1141** extending through the head part **112***h*. The reduced-diameter rod part **1141** extending outward from the head part **112***h* of the cylinder body **112** is provided at an external end thereof with a lug **1142** for connecting the reduced-diameter rod part **1141** to the femoral member of the prosthetic limb. The enlarged-diameter section **1140** extends through the piston **113** projects forward and backward therefrom. The enlarged-diameter section **1140** includes two projections **1140***h*, **1140***b* projecting, respectively, towards the head side and the bottom side from the piston **113**. Those projections **1140***h*, **1140***b* are equal in outside diameter and generally equal in height.

Next, attention should be paid to the head part **112***h* and the bottom part **112***b* of the cylinder body **112**. The head part **112***h* has three holes each having a different diameter from others and arranged in an axial direction thereof. The first hole is an enlarged-diameter hole **1121** located at an opening portion confronting an internal hole **1120** of the cylinder tube **112***c*. The second hole, which is adjacent to the enlarged-diameter hole **1121**, is a middle sized-diameter hole **1122** which is smaller in diameter than the enlarged-

diameter hole **1121** and which forms a step part between the enlarged-diameter hole **1121** and itself. The third hole arranged next to the middle sized-diameter hole **1122** is a reduced-diameter hole **1123** which is open externally. Those three holes **1123**, **1122** and **1121**, as a whole, forms a through-hole having a co-axis and extending through the head part **112***h*.

There is provided, at the reduced-diameter hole **1123**, a first seal member **151** for sealing an outer periphery of the reduced-diameter hole **1141** of the piston rod **114**. There is provided, on the step part between the middle sized-hole **1122** and the enlarged-diameter hole **1121**, a second seal member **152** for sealing an outer periphery of the projection **1140***h* of the piston rod **114**. By sealing the outer periphery of the projection **1140***h* which is brought into the middle sized-hole **1122** at a final stage of the stretching motion of the knee, the second seal member **152** causes a chamber **811** round the projection **1140***h* proximate to the piston **113** to function as a cushion chamber. The air in the cushion chamber **811** flows towards the second chamber **82** only through a throttle passage **813** formed in the head part **112***h*. At the throttle passage **813**, there is provided a cushion adjustment screw **814** through which the throttling degree can be adjusted from outside. In order to permit the flow of air from the first chamber **81** towards the second chamber **82**, there is provided a first passage **101** including a first check valve **91** within the piston rod **114**. The first passage **101** extends through the center of the enlarged-diameter section **1140** of the piston rod **114**. One end of the first passage **101** is open into the second chamber **82** from an end face of the section **1140** and the other end radially traverses the reduced-diameter rod section **1141** and is open in the vicinity of the other end face of the enlarged-diameter section **1140**. The first check valve **91** includes, as a matter of course, a ball **91***a* as a valve body, and a valve spring **91***b* for exerting a closing force to the ball **91***a*, and a spring member **91***c* for supporting one end of the valve spring **91***b*. The constitution relating to the cushion chamber **811** is same as that disclosed by the aforementioned U.S. Pat. No. 5,405,407.

In contrast to the first passage **101** for permitting the flow of air from the first chamber **81** towards the second chamber **82**, there is also provided another passage for permitting the reversed flow of air, namely, from the second chamber **82** towards the first chamber **81**. This second passage **102** is arranged at the cylinder body **112** in contrast to the first passage **101** being arranged at the piston rod **114**. The second passage **102** extends through the interior of a side wall of the cylinder tube **112***c*, which is partly thick in wall, from the head side towards the bottom side in parallel to the axis of the cylinder body **112**. The second passage **102** is, on the head side, in communication with the first chamber **81** via an opening **102***a* near the end face of the head part **112***h* and is, on the bottom side, in communication with the second chamber **82** via a check valve **92** and a constant throttle valve **140** received in the bottom part **112***b*.

The second check valve **92** for the second passage **102** is disposed within a hole orthogonal to the second passage **102**. The second check valve **92** includes, as in the case with the first check valve **91**, a ball **92***a* as a valve body, a valve spring **92***b* for exerting a closing force to the ball **92***a*, and a screw member **92***c* for supporting one end of the valve spring **92***b*. The screw member **92***c* includes therein a hole **92***d* having a T-shaped configuration in section, this hole **92***d* being provided for obtaining the function as a passage, and at a head part confronting outside a driver groove **92***e*, this driver groove **92***e* being provided for setting up the second check valve **92**. On the other hand, the constant throttle valve **140** is connected, in serial relation, to the second check valve **92** on the second passage **102**. The constant throttle valve **140** is located within a step hole **145** disposed at a lower part of the bottom part **112***b* of the cylinder body **112**. The step hole **145** comprises a reduced-diameter hole **145***a* including a valve seat, and an enlarged-diameter hole **145***b* which is enlarged in diameter compared with the hole **145***a*. A side part of the enlarged-diameter hole **145***b* is in communication with a hole containing therein the second check valve **92**, while one end of the reduced-diameter hole **145***a* is defined as an opening which is communicated with the second chamber **82** formed within the cylinder body **112**. The constant throttle valve **140** comprises a valve body **141** which is provided at one end thereof with a tapered part **141***a* and at the other end with a sleeve-like guide part **141***b*, a threaded ring **142** threadingly engageable with an outer periphery of the guide part **141***b* of the valve body **141**, a cap **143** engaged with the guide part **141***b* of the valve body **141** and covering an external side of threaded ring **142**, and O-rings **144***a*, **144***b* for sealing joining surfaces of between the cap **143** and the threaded rig **142** and between the threaded ring **142** and the bottom part **112***b*, respectively. By converting a rotary motion to a linear motion utilizing the threading engagement between the threaded ring **142** and the guide part **141***b* of the valve body **141**, the constant throttle valve **140** can adjust the throttling degree and opening degree of the valve body **141**. Since the constant throttle valve **140** is disposed on the second passage **102** and its valve body **141** is confronted with the opening leading to the second chamber **82**, the flow of air from the second chamber **82** towards the first chamber **81** is normally restricted. An opening area of the constant throttle valve **140** is set, for example, 0.008 to 0.009 mm^2.

In the air-cylinder apparatus **110** according to the first embodiment of the present invention, an internal structure of the second chamber **82** facing the constant throttle valve **140** is same as the first chamber **81**. At the bottom part **112***b*, there are provided two holes each having a different diameter along an axial direction of the bottom part **112***b*, which holes are adjacent to and in communication with the internal hole **1120** of the cylinder tube **112***c*. The first hole is an enlarged-diameter hole **1125** located at the opening confronting the internal hole **1120** of the cylinder tube **112***c*. The second hole adjacent to the enlarged-diameter hole **1125** is a middle sized-hole **1127** which is smaller in diameter than the enlarged-diameter hole **1125** and which forms a step part between the enlarged-diameter hole **1125** and itself. The middle sized-diameter hole **1127** and the enlarged-diameter hole **1125** are coaxial with the internal hole **1120** of the cylinder tube **112***c*. On the step part between the middle sized-diameter hole **1127** and the enlarged-diameter hole **1125**, there is provided a lip type seal member **155** for sealing the outer periphery of the projection **1140***b* of the piston rod **114**. The seal member **155** is adapted to seal the outer periphery of the projection **1140***b* of the enlarged-diameter section **1140** at a stage where the bending angle of the knee exceeds a predetermined value. The time point for the seal member **155** to seal the outer periphery of the projection **1140***b* is the time when the bending degree of the knee is increased to bring the projection **1140***b* into the middle sized-hole **1127** as a recess. That time point corresponds to the stage where the bending angle of the knee exceeds 50 degrees (this angle is the maximum bending angle in a normal walking speed). Such a time point as just mentioned above can easily be set by changing either the length of the projection **1140***b* of the enlarged-diameter section **1140** or the location where the seal member **155** is arranged.

From a different viewpoint, to seal the outer periphery of the projection **1140***b* by the seal member **155** is to divide the second chamber **82** on the bottom side into two chambers. One of the divided chambers is a chamber **821** located within the cylinder tube **112***c* and defined by the piston **113** and the seal member **155**. The other is a chamber **822** which is defined within the middle sized-diameter hole **1127**. There is provided at a bottom part of the middle sized-diameter hole **1127** an opening which is in communication with the constant throttle valve **140**. The chamber **822** is a predetermined chamber confronting the opening leading for communication to the constant throttle valve **140**. At the bottom part **112***b*, there is provided a throttle passage **823** as an auxiliary passage for communicating with the two chambers **821**, **822**. The throttle passage **823** is open to the chamber **821** at a location more radially outside than the seal member **155**. At a midway of the throttle passage **823**, there is provided a screw type needle valve **824** as a throttle valve. An opening area of the throttle valve **824** is small compared with that of the constant throttle valve **140**. For example, the opening area of the throttle valve **824** is set 0.003 to 0.004 mm^2. At a stage where the bending degree of the knee is small and the second chamber **82** is not yet divided into two, the constant throttle valve **140** generates a torque necessary for increasing the pressure in the second chamber **82**. On the other hand at a stage where the bending degree of the knee is increased and the second chamber **82** is divided into two, the constant throttle valve **140** increases the pressure in the chamber **822** and the throttle valve **824** increases the pressure in the chamber **821**. FIG. **10** is a graph showing one example of pressure characteristics in the air-cylinder apparatus **110** in which the bending angle of the knee is plotted along the abscissa and the pressure generated in the second chamber **82** or torque attributable to the generation of the pressure is plotted along the ordinate. As shown in the characteristics chart of FIG. **10**, the air-cylinder apparatus **110** exhibits very smooth characteristics.

Second Embodiment

FIGS. **11** to **13** show an air-cylinder apparatus **2110** according to a second embodiment of the present invention. In this air-cylinder apparatus **2110**, a recess **2127** is provided at a piston **2113** of a cylinder body **2112**, and a counterpart projection **2140** is provided at a bottom part **2112***b* of the cylinder body **2112**. In accordance with this arrangement, a first passage **2101** including a first check valve **91** for permitting the flow of air from the first chamber **81** towards the second chamber **82** is, as in the case with a second passage **2102** as another communication passage, is disposed within a side wall of a cylinder tube **2112***c*. In the air-cylinder apparatus **2120** according to the second embodiment, the constant throttle valve **140**, as in the case with the first embodiment, increases the pressure in the second chamber **82** at a stage where the bending angle of the knee is small. However, since the second chamber **82** is divided into two chambers **2821** and **2822** when the bending angle of the knee reaches a predetermined stage, the chamber **2821** is increased in pressure by the constant throttle valve **140** and the other chamber **2822** is increased in pressure by the throttle valve **824**. The pressure characteristics thus obtained are same as FIG. **10**. An additional feature of the air-cylinder apparatus **2110** is that the recess **2127** is concentrically formed in the piston **2123** which is moved into the middle sized-diameter hole **1122** on the head side. Owing to this feature, the cylinder stroke can be enlarged. Moreover, since the capacity or the newly defined chamber **2822** can be increased, more sufficient pressure increase can be obtained.

Third Embodiment

FIGS. **14** to **16** show an air-cylinder apparatus **3110** according to a third embodiment of the present invention. This air-cylinder apparatus **3110** is common with the second embodiment in the respects that a recess **3127** formed in a piston **3113** is engaged with a projection **3140** formed on a bottom part **3112***b* of a cylinder body **3112** and a first passage **3101** and a second passage **3102** are disposed within a side wall of a cylinder tube **3112***c*. The third embodiment is different from the second embodiment in the following respects. The chambers defined as a result of division is reversed. A newly defined chamber **3822** is located within the recess **3127** of the piston **3113**. Accordingly, the newly defined chamber **3822** is increased in pressure by the throttle valve **824** and a chamber **3821** at a side periphery of the projection **3140** is increased in pressure by the constant throttle valve **140**. Since the newly defined chambers are reversed, the lip of the seal member **155** for sealing the outer periphery of the projection **3140** is revered in direction with respect to the second embodiment.

Fourth Embodiment

FIGS. **17** to **19** show an air-cylinder apparatus **4110** according to fourth embodiment of the present invention. In this air-cylinder apparatus **4110**, the throttling function is changed over three-stage. The basic idea of design is same as in the first embodiment. In order to make it possible to change the throttling function over three-stage, a projection extending towards the bottom side of an enlarged-diameter section **4140** consists of two portions, namely, a reduced-diameter portion **4140***b* and an enlarged-diameter portion **4140**B. Hence, a reduced-diameter recess **4127***a* and an enlarged-diameter recess **4127***b* are formed in a bottom part **4112***b* of a cylinder body **4112**. When the bending of the knee is progressed to some extent, first, the reduced-diameter projection **4140***b* is brought into the reduced-diameter recess **4127***a* and a new chamber **4822***a* is defined at the side periphery of the projection of the enlarged-diameter section **4140**. When the bending degree of the knee is further increased, a new chamber **4822***b* is also defined at a side periphery of the enlarged-diameter projection **4140**B. In an early stage of the bending motion of the knee, the constant throttle valve **140** takes the role for throttling with respect to the second chamber **82**. However, with respect to the chambers **4822***a*, **4822***b* which are defined in a stage where the bending degree of the knee is increased, those throttle valves **4824***a*, **4824***b*, which are provided for the chambers **4822***a*, **4822***b*, respectively, take the role for throttling. The throttle valves **4824***a*, **4824***b* are set small in opening area compared with the constant throttle valve **140**. However, the opening areas of the throttle valves **4824***a*, **4824***b* may be set equal to each other or different from each other. FIG. **20** is a graph showing one example of pressure characteristics in the air-cylinder apparatus **4110**. As shown in the characteristics chart of FIG. **20**, the air-cylinder apparatus **4110** can exhibit smooth characteristics for wider range of walking speed.

What is claimed is:

1. An air-cylinder apparatus for use in a prosthetic limb which is designed for assisting a bending motion and a stretching motion of a wearer's knee, said air-cylinder apparatus comprising a cylinder body of a cylindrical configuration whose one end portion is closed by a head part and the other end portion is closed by a bottom part, a piston disposed within said cylinder body and defining an interior of said cylinder body into a first chamber located on the head

side and a second chamber located on the bottom side, a piston rod whose one end is integral with said piston and the other end extends outward from the head of said cylinder body so as to be connected with the prosthetic limb, a first passage for intercommunicating said first and second chambers and including a first check valve for permitting a flow of air from said first chamber towards said second chamber, and a second passage for intercommunicating said first and second chambers and including a constant throttle valve for normally restricting a flow of air from said second chamber towards said first chamber, in order to increase internal pressure of said second chamber when the knee is bent, said air-cylinder apparatus further comprising:

(A) division means having a recess or projection at a bottom part of said cylinder body and a counterpart projection or recess at one surface of said piston facing the bottom part and adapted to divide said second chamber on the bottom side into a plurality of chambers including a predetermined chamber confronting an opening leading for communication to said constant throttle valve; and

(B) an auxiliary passage for communicating the plurality of chambers divided by said division means with said first chamber through a throttle valve.

2. An air-cylinder apparatus according to claim **1**, wherein said throttle valve of said auxiliary passage is in communication with said first chamber via the predetermined chamber and said constant throttle valve.

3. An air-cylinder apparatus according to claim **1**, wherein said division means includes a seal member for sealing said recess or projection to be engaged with each other.

4. An air-cylinder apparatus according to claim **2**, wherein said second passage serves as a common passage for communicating the divided plural chambers with said first chamber.

5. An air-cylinder apparatus according to claim **1**, wherein said second passage includes, in addition to said constant throttle valve, a second check valve for permitting a flow of air from said second chamber towards said first chamber.

6. An air-cylinder apparatus according to claim **1**, wherein said throttle valves are fixed throttle valves each having a constant throttling amount.

7. An air-cylinder apparatus according to claim **1**, wherein said second passage is disposed at said cylinder body.

8. An air-cylinder apparatus according to claim **7**, wherein said first passage is disposed at either one of said piston and said cylinder body.

9. An air-cylinder apparatus according to claim **1**, wherein the predetermined chamber is smaller in volume than the remaining chamber among the plural chambers obtained by division.

10. An air-cylinder apparatus according to claim **1**, wherein the plural chambers obtained by division are concentrically arranged about a center axis of said piston.

* * * * *