US008162112B2

(12) **United States Patent**
Gartner et al.

(10) **Patent No.: US 8,162,112 B2**
(45) **Date of Patent: Apr. 24, 2012**

(54) **METHODS AND APPARATUS FOR PROTECTING A SHOCK ABSORBER FROM BOTTOMING**

(75) Inventors: **Bill J. Gartner**, Wyomissing, PA (US); **Andrew Benjamin Lambert**, Fleetwood, PA (US)

(73) Assignee: **Competition Tire East**, Reading, PA (US)

(*) Notice: Subject to any disclaimer, the term of this patent is extended or adjusted under 35 U.S.C. 154(b) by 929 days.

(21) Appl. No.: **12/029,112**

(22) Filed: **Feb. 11, 2008**

(65) **Prior Publication Data**

US 2008/0203631 A1 Aug. 28, 2008

Related U.S. Application Data

(60) Provisional application No. 60/889,050, filed on Feb. 9, 2007.

(51) **Int. Cl.**
F16F 9/48 (2006.01)
F16F 9/44 (2006.01)

(52) **U.S. Cl.** **188/285**; 188/288; 188/289; 188/313; 188/317; 188/319.2

(58) **Field of Classification Search** 188/284, 188/285, 288, 289, 313, 316, 317, 319.1, 188/319.2; 16/51, 52, 56; 89/42.01, 43.01
See application file for complete search history.

(56) **References Cited**

U.S. PATENT DOCUMENTS

1,037,052	A	8/1912	Rennie	
1,195,028	A	8/1916	Joyce	
1,282,712	A	10/1918	Barrell	
1,331,564	A	2/1920	Gruss	
1,445,414	A	2/1923	Schuessler	
1,445,615	A	2/1923	Ferres	
1,459,365	A	6/1923	Dains	
1,780,531	A	11/1930	Messier	
1,957,308	A *	5/1934	Anderson	188/289
2,088,875	A	8/1937	Serste	
2,224,306	A	12/1940	Krueger	
2,440,353	A	4/1948	Wallace	
2,599,477	A	6/1952	Patriquin	
2,649,937	A	8/1953	Crabtree	
2,649,938	A	8/1953	Crabtree	
2,671,536	A	3/1954	Jurasevich	
2,713,401	A	7/1955	Serste et al.	
2,721,074	A	10/1955	Bourcier de Carbon	
2,729,308	A	1/1956	Koski et al.	

(Continued)

FOREIGN PATENT DOCUMENTS

DE 19829765 A1 * 2/1999

(Continued)

OTHER PUBLICATIONS

EPO machine translation of DE 19829765A1, published Feb. 1999.*

Primary Examiner — Thomas J Williams
(74) *Attorney, Agent, or Firm* — John V. Daniluck; Bingham Greenebaum Doll LLP

(57) **ABSTRACT**

Methods and apparatus for accommodating vehicle suspensions that may bottom out. Some embodiments of the present invention include the secondary shock absorber placed within a primary shock absorber. Yet clear embodiments describe a shock absorber having multiple fluid flowpaths during compression, with one of the flowpaths being active near the bottoming-out condition.

60 Claims, 19 Drawing Sheets

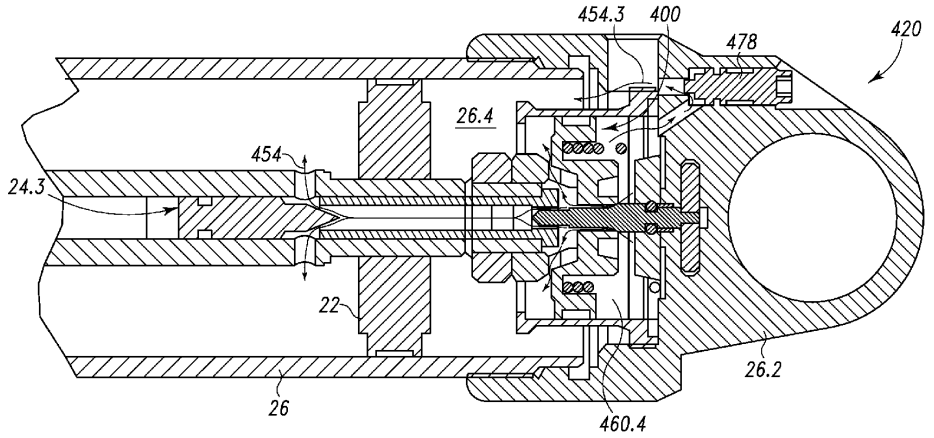

SRAM_FOX_CO_000265

U.S. PATENT DOCUMENTS

2,740,500	A		4/1956	Brundrett et al.	
2,780,321	A		2/1957	Sturari	
2,825,427	A		3/1958	Steibel	
2,879,987	A		3/1959	Cussons	
3,079,629	A	*	3/1963	Millard et al.	188/289
3,134,460	A		5/1964	Bourcier de Carbon	
3,147,826	A		9/1964	McHenry	
3,175,645	A		3/1965	Schafer et al.	
3,447,644	A	*	6/1969	Duckett	188/288
3,698,284	A		10/1972	Toering et al.	
3,848,710	A		11/1974	Thompson et al.	
3,882,977	A		5/1975	Watanabe	
3,887,224	A		6/1975	Browne	
3,888,436	A		6/1975	Sealey	
3,972,551	A		8/1976	Fannin	
3,990,687	A		11/1976	Curnutt	
4,054,277	A		10/1977	Sirven	
4,106,596	A		8/1978	Hausmann	
4,226,408	A		10/1980	Tomita et al.	
4,274,515	A		6/1981	Bourcier de Carbon	
4,332,460	A		6/1982	Costanza	
4,405,119	A		9/1983	Masclet et al.	
4,437,548	A		3/1984	Ashiba	
4,624,346	A		11/1986	Katz	
4,632,228	A		12/1986	Oster et al.	
4,635,766	A	*	1/1987	Street, Jr.	188/284
4,671,392	A		6/1987	Wossner	
4,732,244	A		3/1988	Verkuylen	
4,749,068	A		6/1988	Sirven	
4,785,345	A		11/1988	Rawls et al.	
4,813,519	A		3/1989	Matsubara et al.	
4,883,150	A		11/1989	Arai	
4,890,822	A		1/1990	Ezure et al.	
4,909,488	A		3/1990	Seibert et al.	
4,921,224	A		5/1990	Fukumura et al.	
4,934,749	A		6/1990	Folarin	
4,936,424	A		6/1990	Costa	
5,024,301	A		6/1991	Cook	
5,190,126	A		3/1993	Curnutt	
5,201,389	A		4/1993	Miller et al.	
5,248,014	A		9/1993	Ashiba	
5,293,971	A		3/1994	Kanari et al.	
5,351,790	A		10/1994	Machida	
5,480,011	A		1/1996	Nagai et al.	
5,570,762	A		11/1996	Jentsch et al.	
5,595,270	A		1/1997	Braun et al.	
5,597,054	A		1/1997	Nagai et al.	
5,649,692	A		7/1997	Gilsdorf et al.	
5,810,128	A		9/1998	Eriksson et al.	
5,810,130	A		9/1998	McCandless	
5,823,306	A		10/1998	de Molina	
5,911,290	A		6/1999	Steed	
5,913,391	A		6/1999	Jeffries et al.	
5,988,610	A		11/1999	Hiraki et al.	
6,029,958	A		2/2000	Larsson et al.	
6,217,010	B1		4/2001	McNeely	
6,220,409	B1		4/2001	Deferme	
6,234,461	B1		5/2001	Bohm et al.	
6,286,642	B1		9/2001	Yi	
6,296,092	B1		10/2001	Marking et al.	
6,318,525	B1		11/2001	Vignocchi et al.	
6,446,771	B1		9/2002	Sintorn et al.	
6,511,085	B2		1/2003	Sawai	
6,609,597	B1		8/2003	Heideman	
6,672,435	B2		1/2004	Lemieux	
6,681,906	B1		1/2004	Sasse	
6,725,983	B2		4/2004	Bell	
6,776,269	B1		8/2004	Schel	
6,814,193	B2		11/2004	Grundel	
6,978,872	B2		12/2005	Turner	
7,032,727	B2		4/2006	Vanspauwen	
7,156,214	B2		1/2007	Pradel et al.	
7,172,057	B2		2/2007	Gundermann et al.	
7,172,058	B2		2/2007	Burkert et al.	
2002/0053493	A1	*	5/2002	Sintorn et al.	188/313

FOREIGN PATENT DOCUMENTS

EP	0748950	B1		7/1999
GB	2148449	A	*	5/1985
WO	02095260	A1		11/2002

* cited by examiner

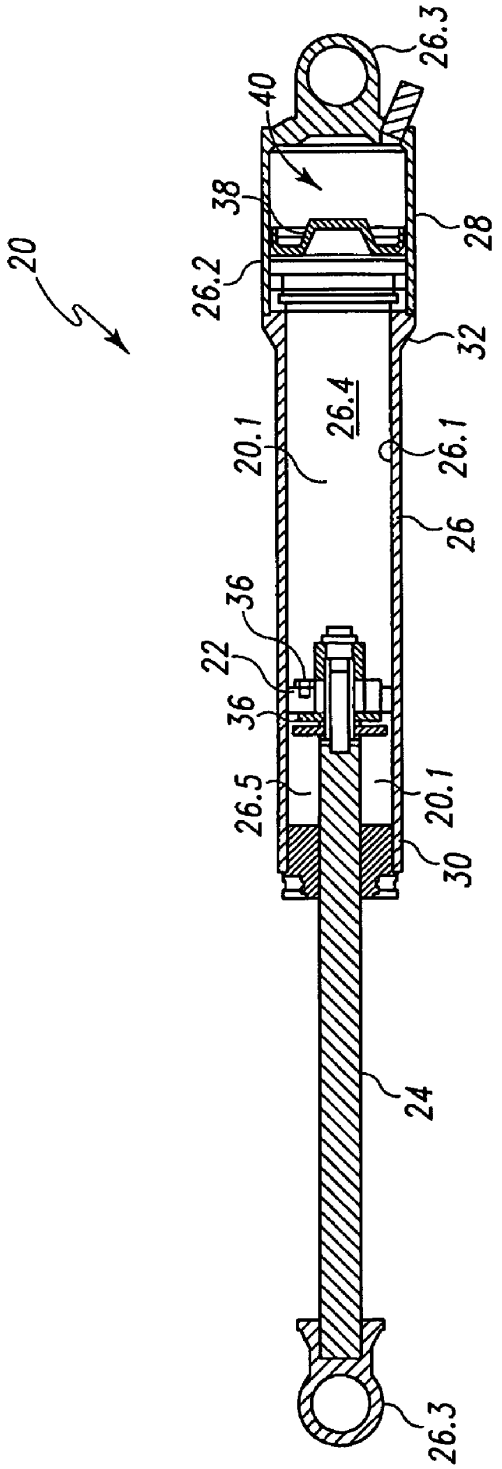

Fig. 1A

PRIOR ART

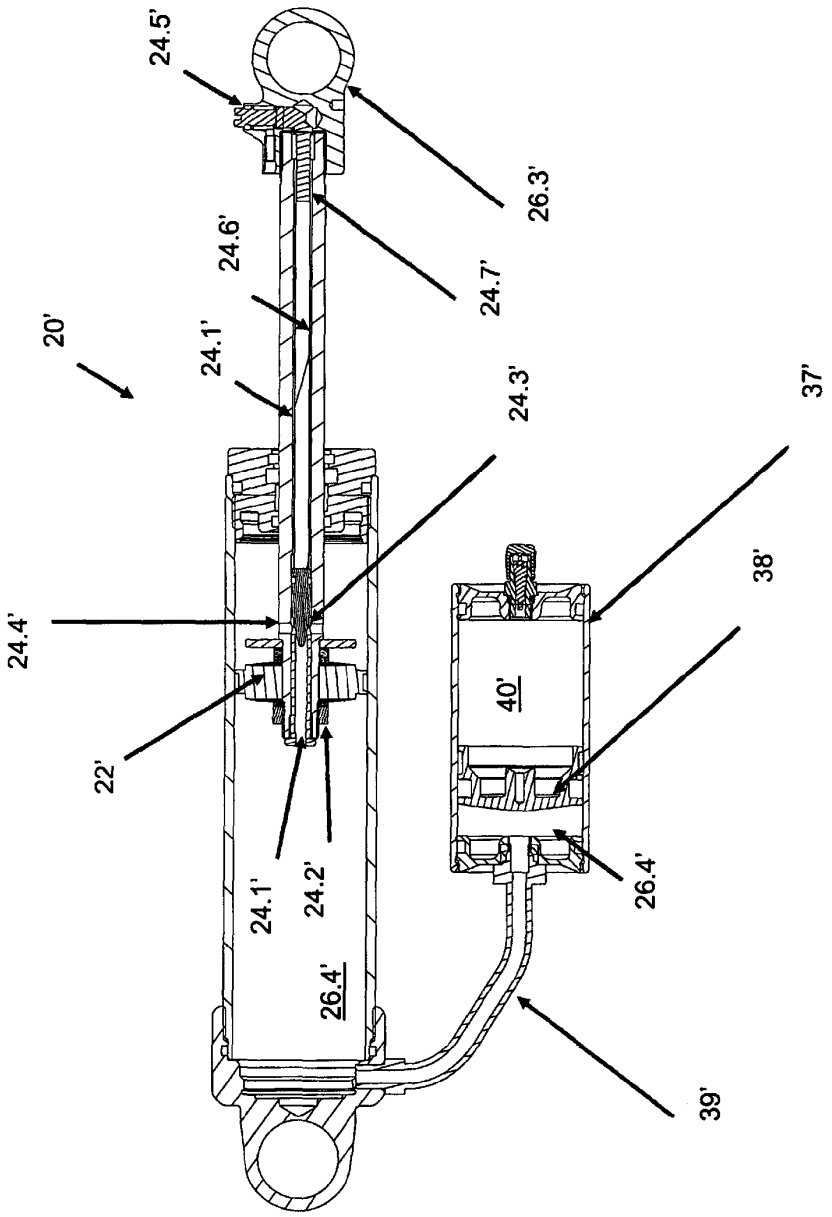

Fig. 1b

PRIOR ART

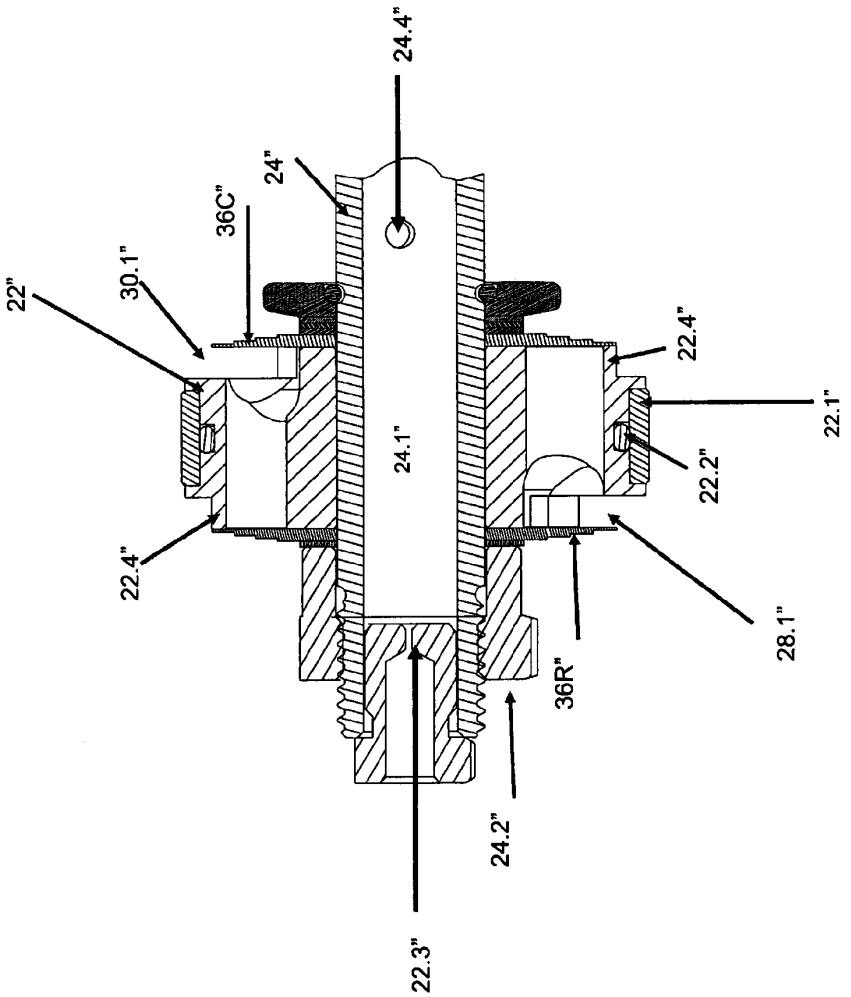

FIG. 1C

PRIOR ART

SRAM_FOX_CO_000269

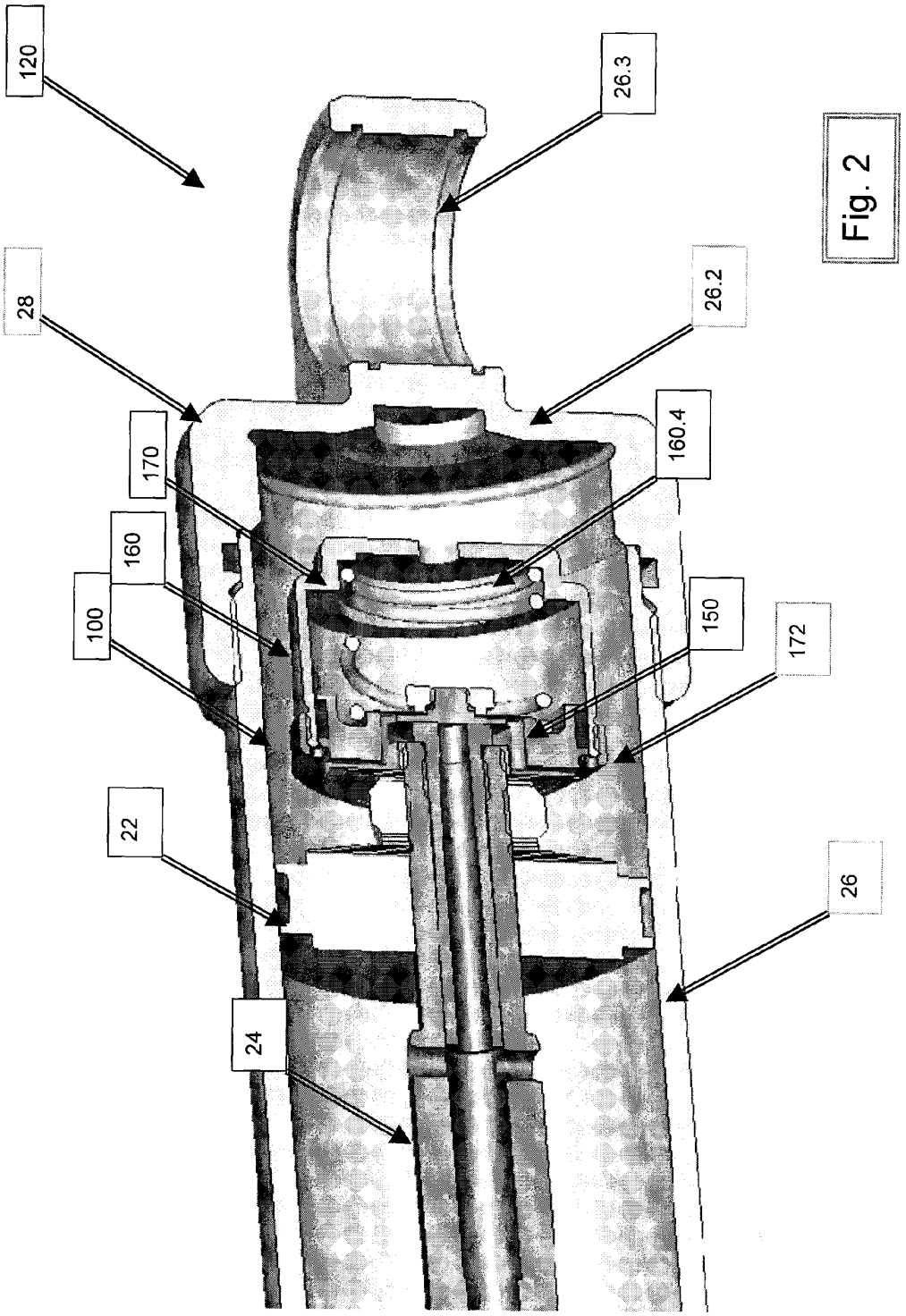

Fig. 2

SRAM_FOX_CO_000270

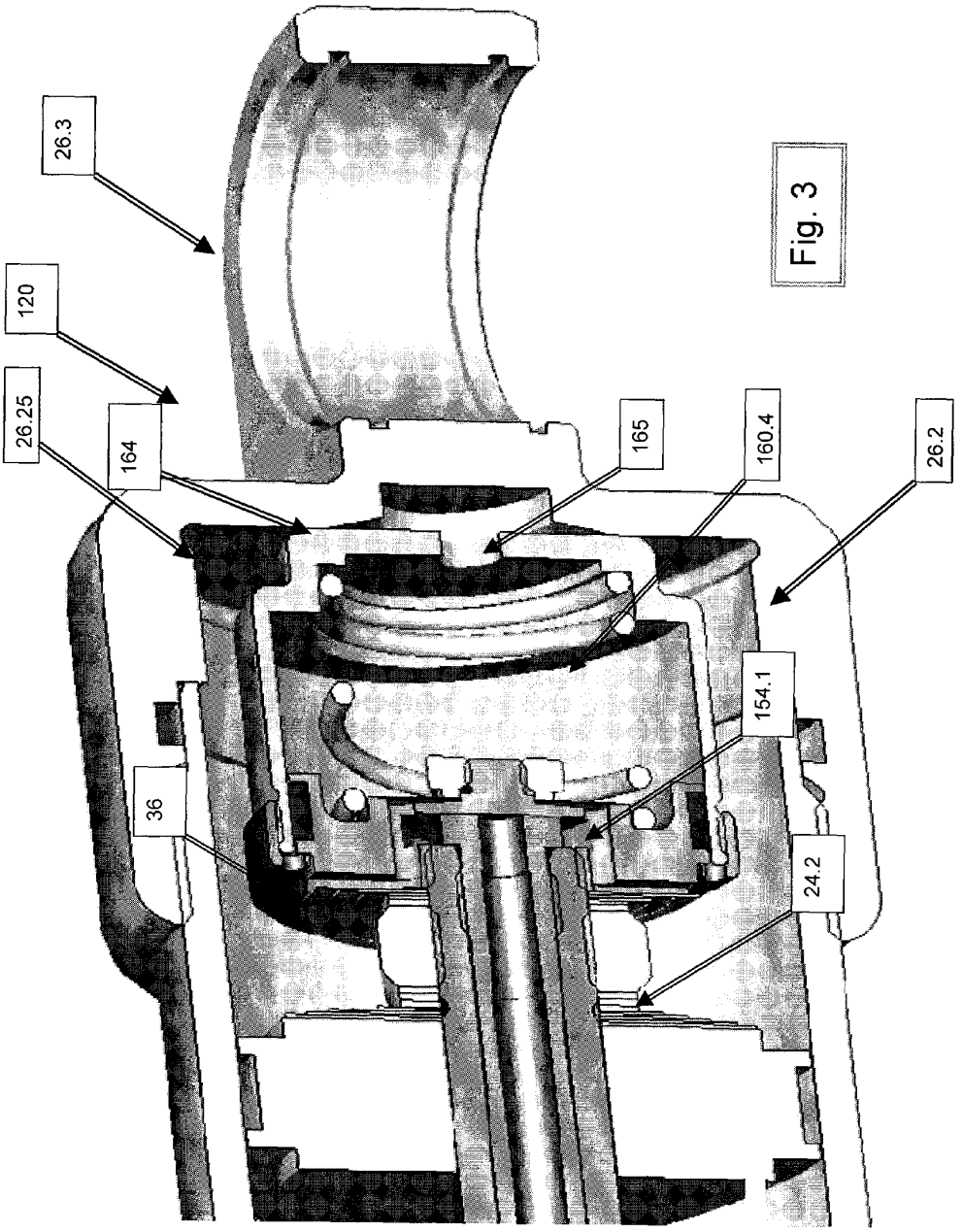

Fig. 3

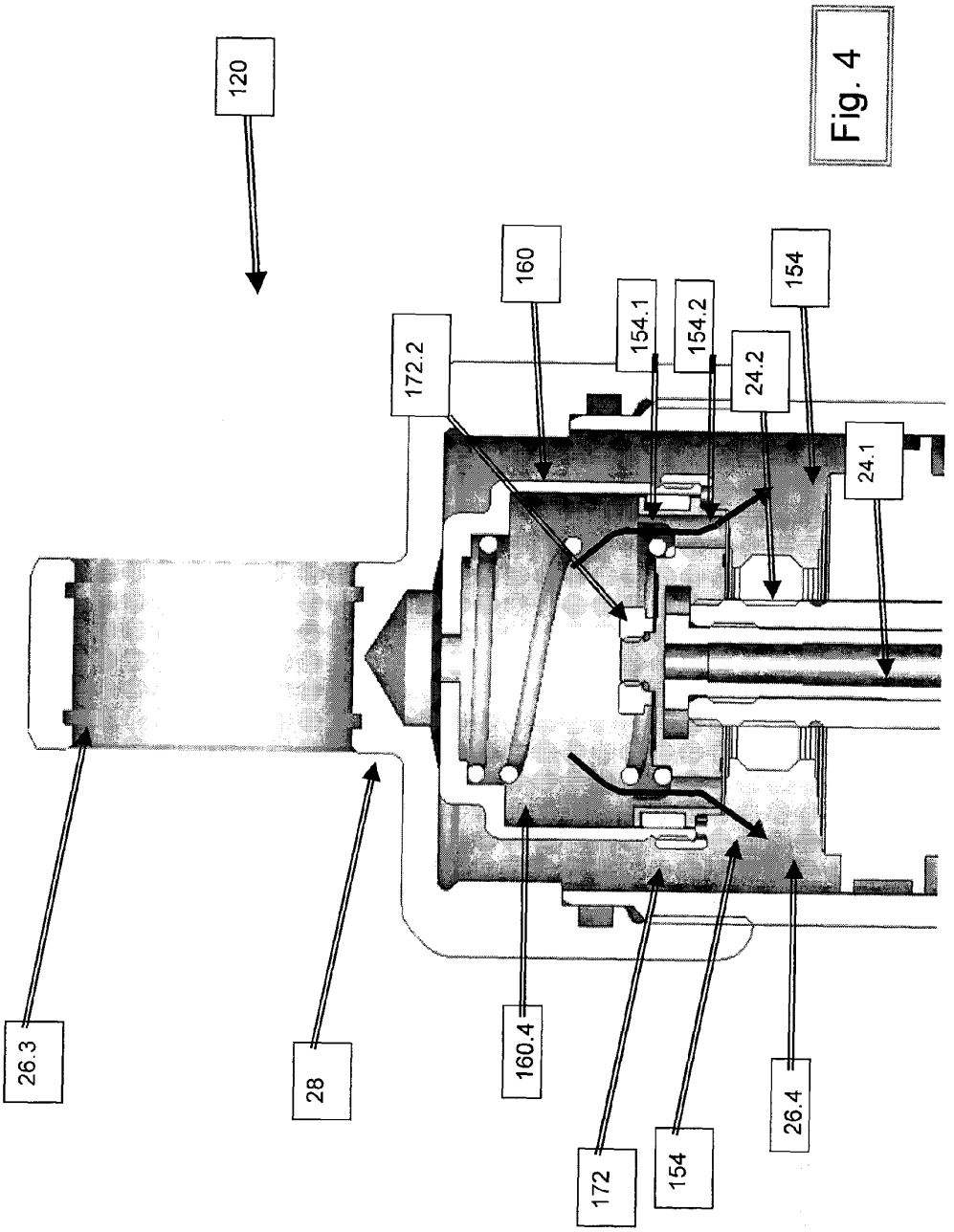

Fig. 4

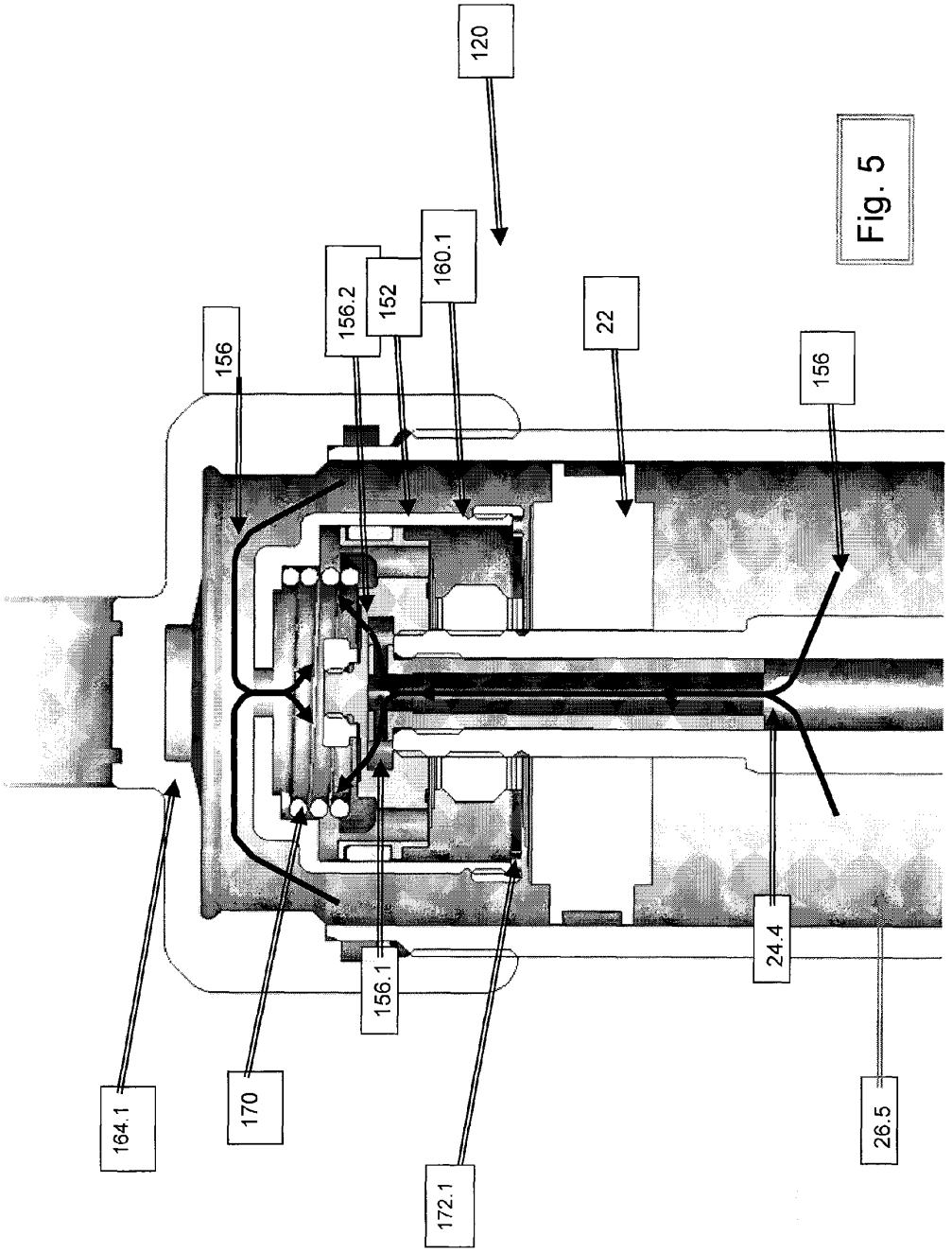

Fig. 5

SRAM_FOX_CO_000273

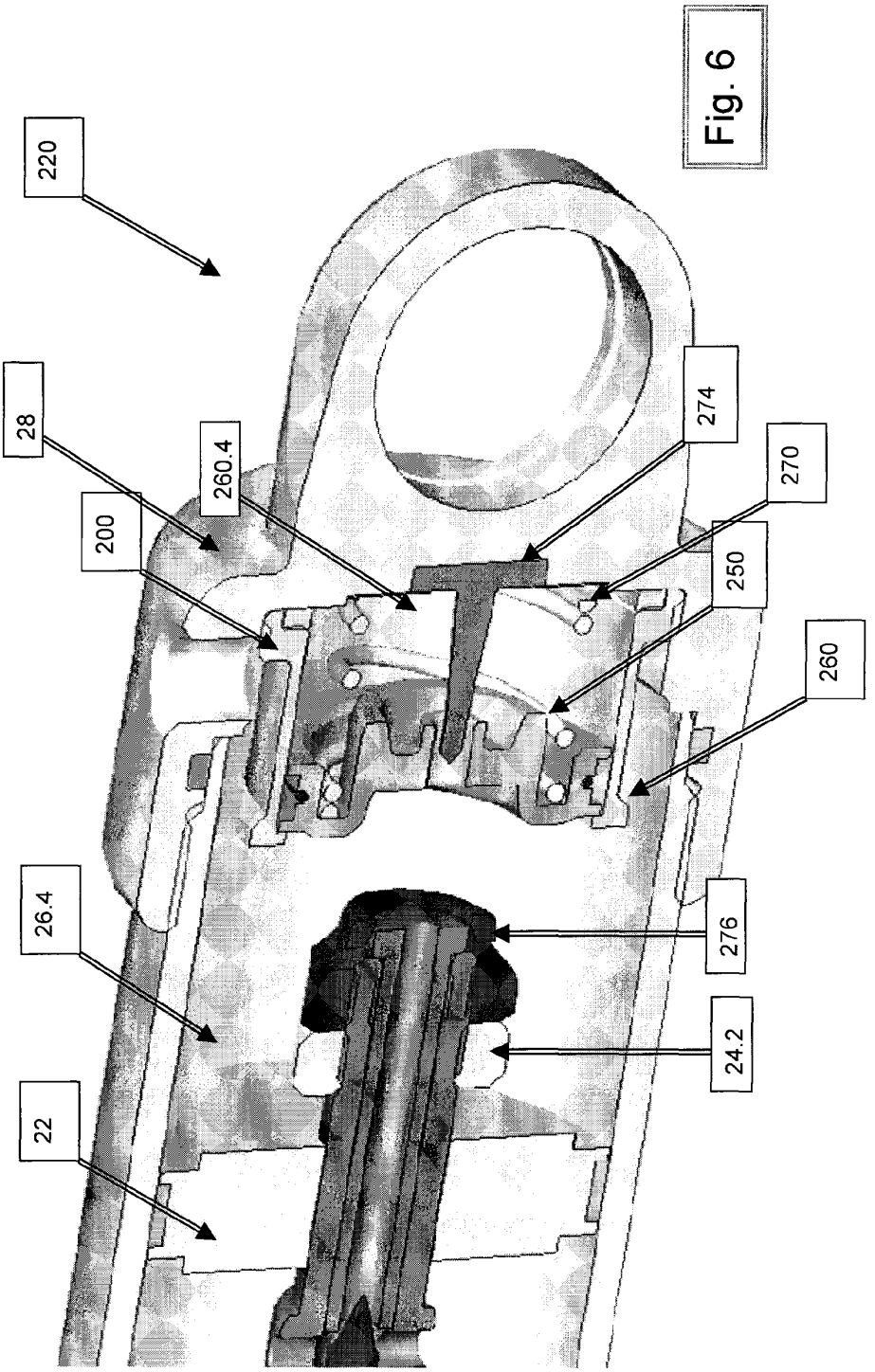

Fig. 6

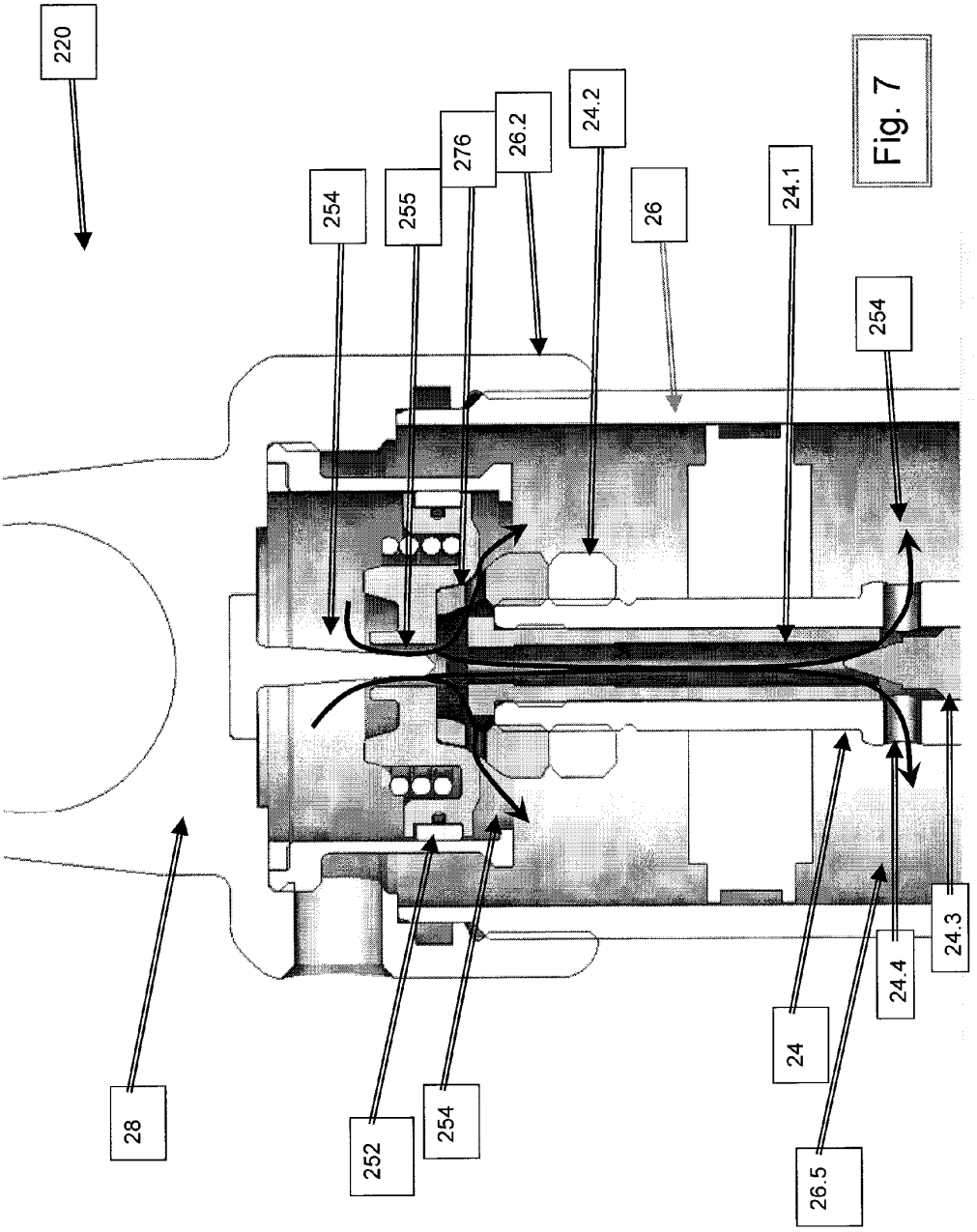

Fig. 7

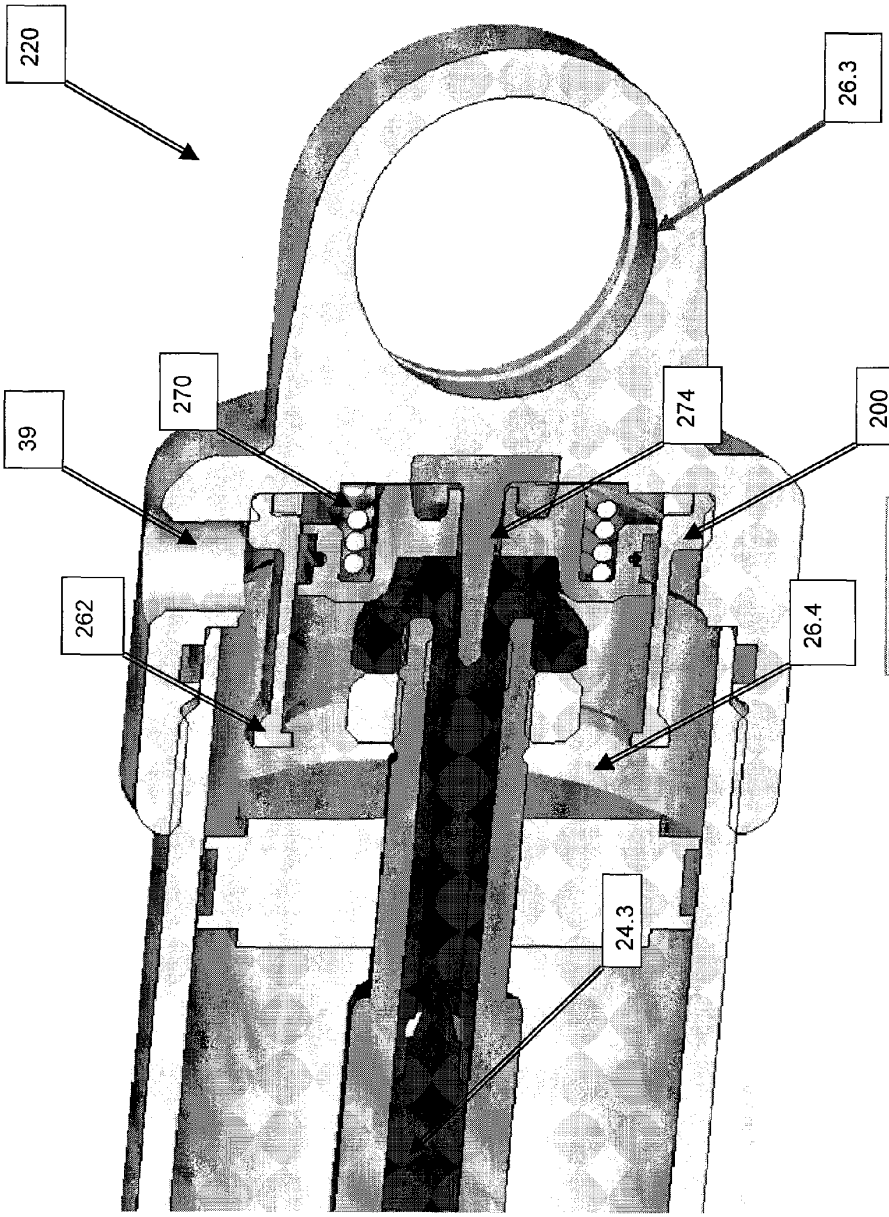

Fig. 8a

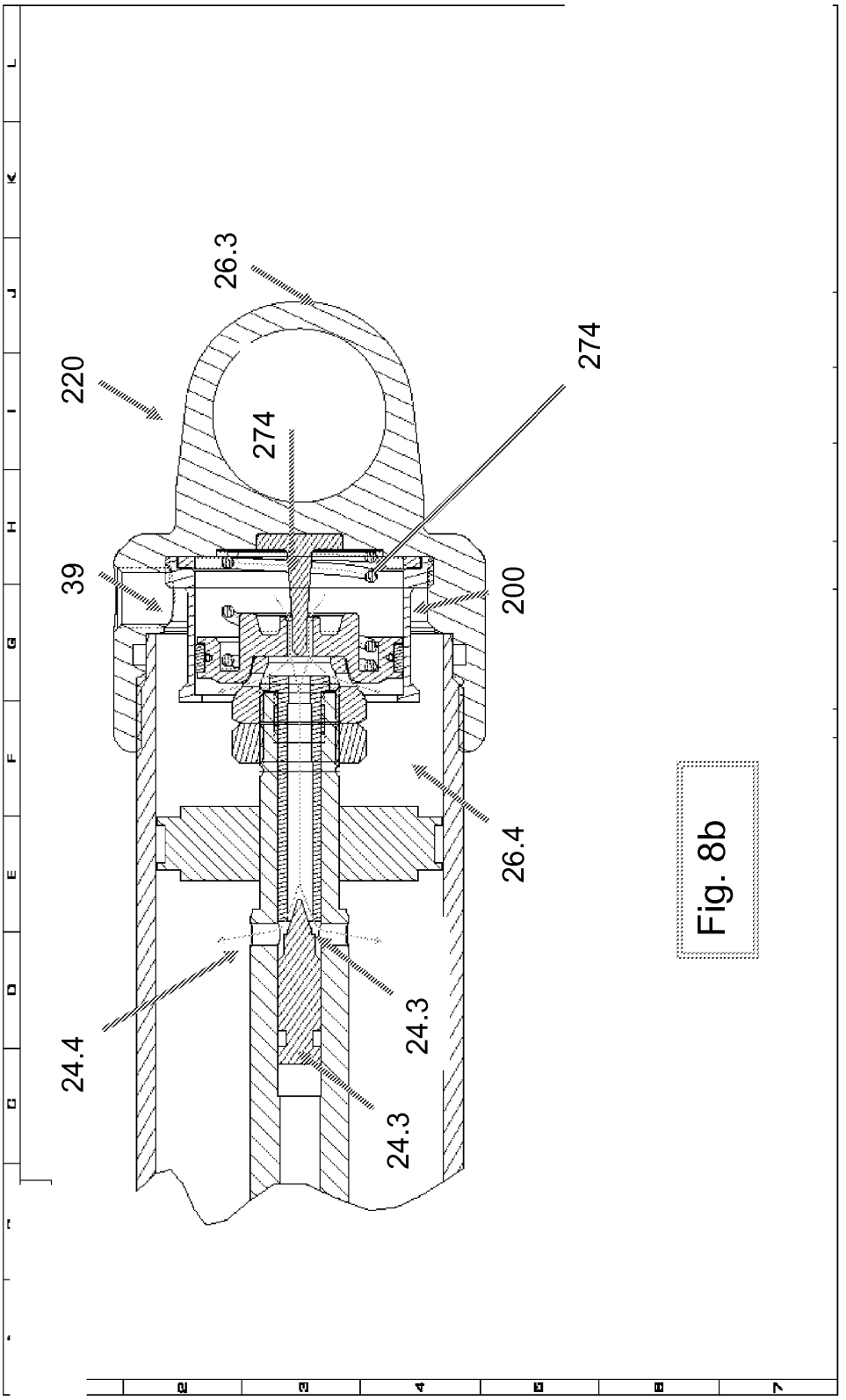

Fig. 8b

SRAM_FOX_CO_000277

Fig. 9

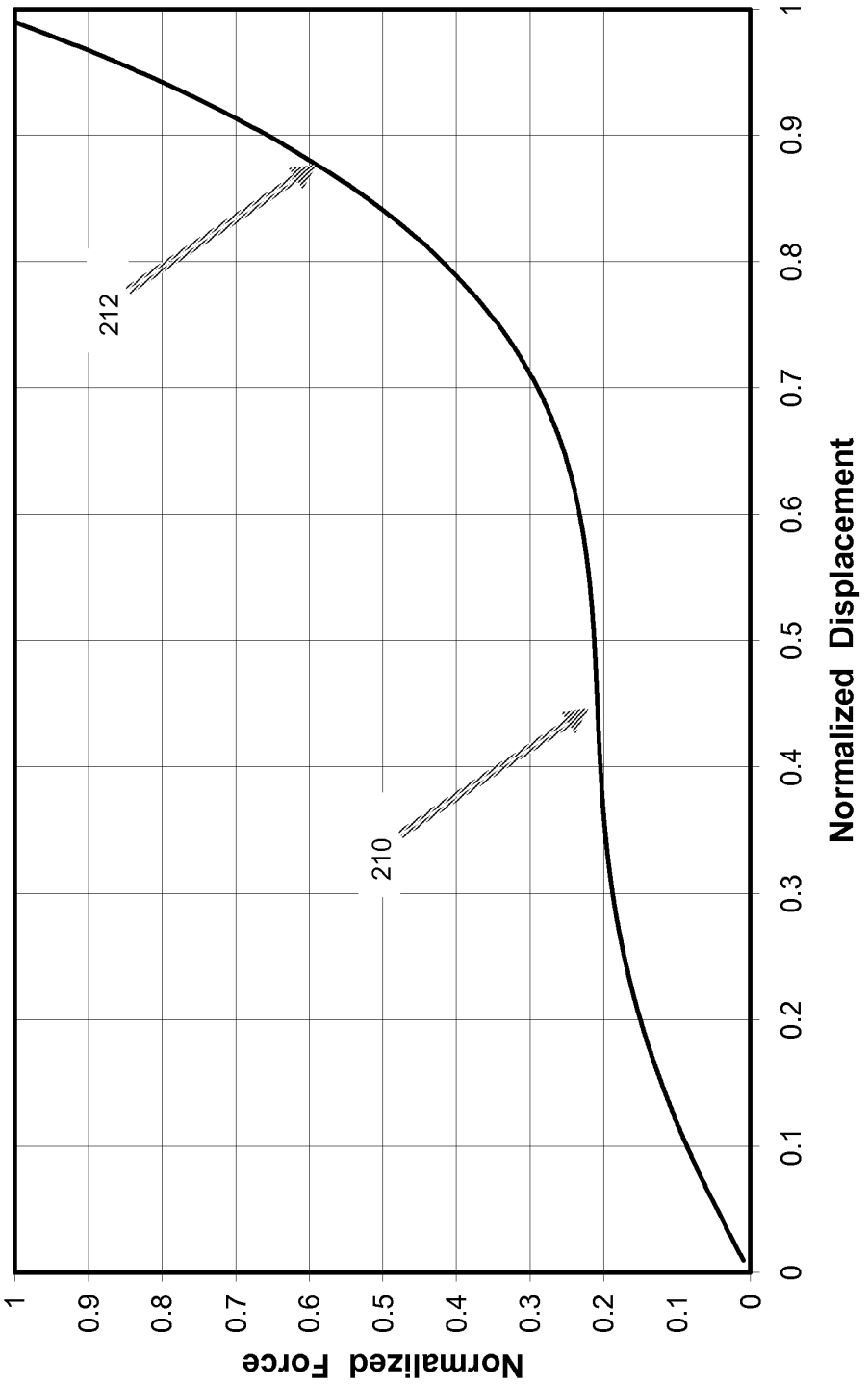

SRAM_FOX_CO_000278

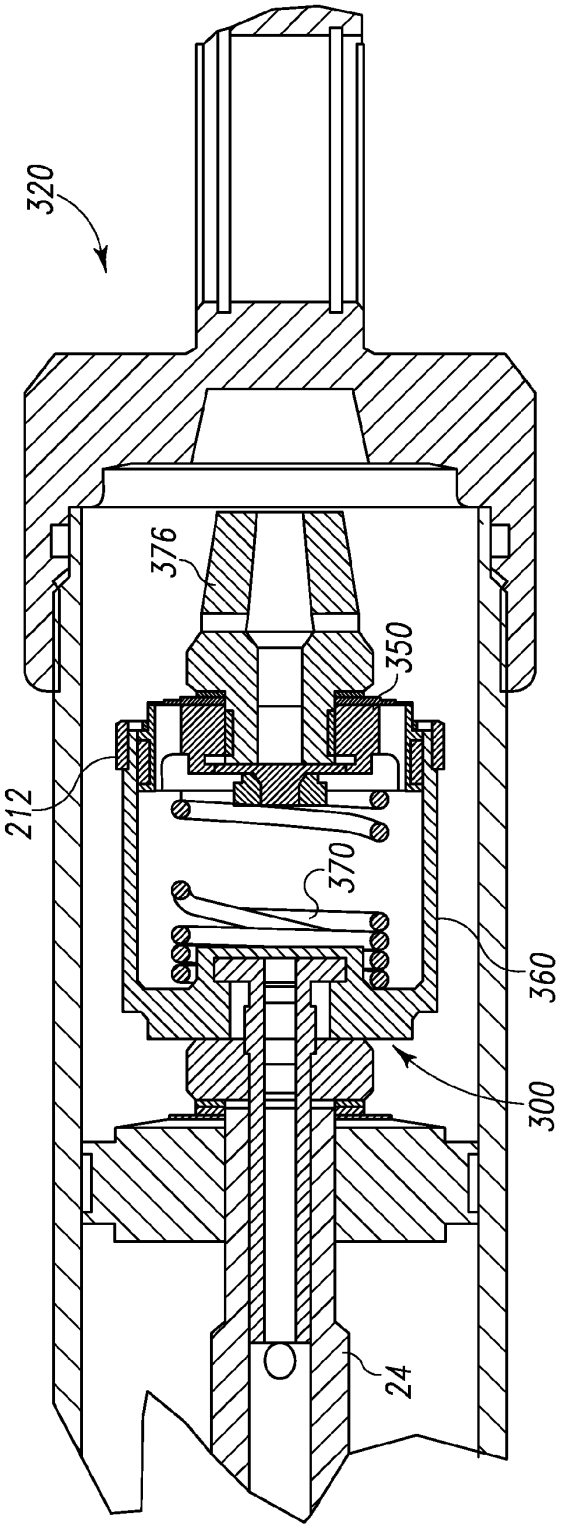

Fig. 10

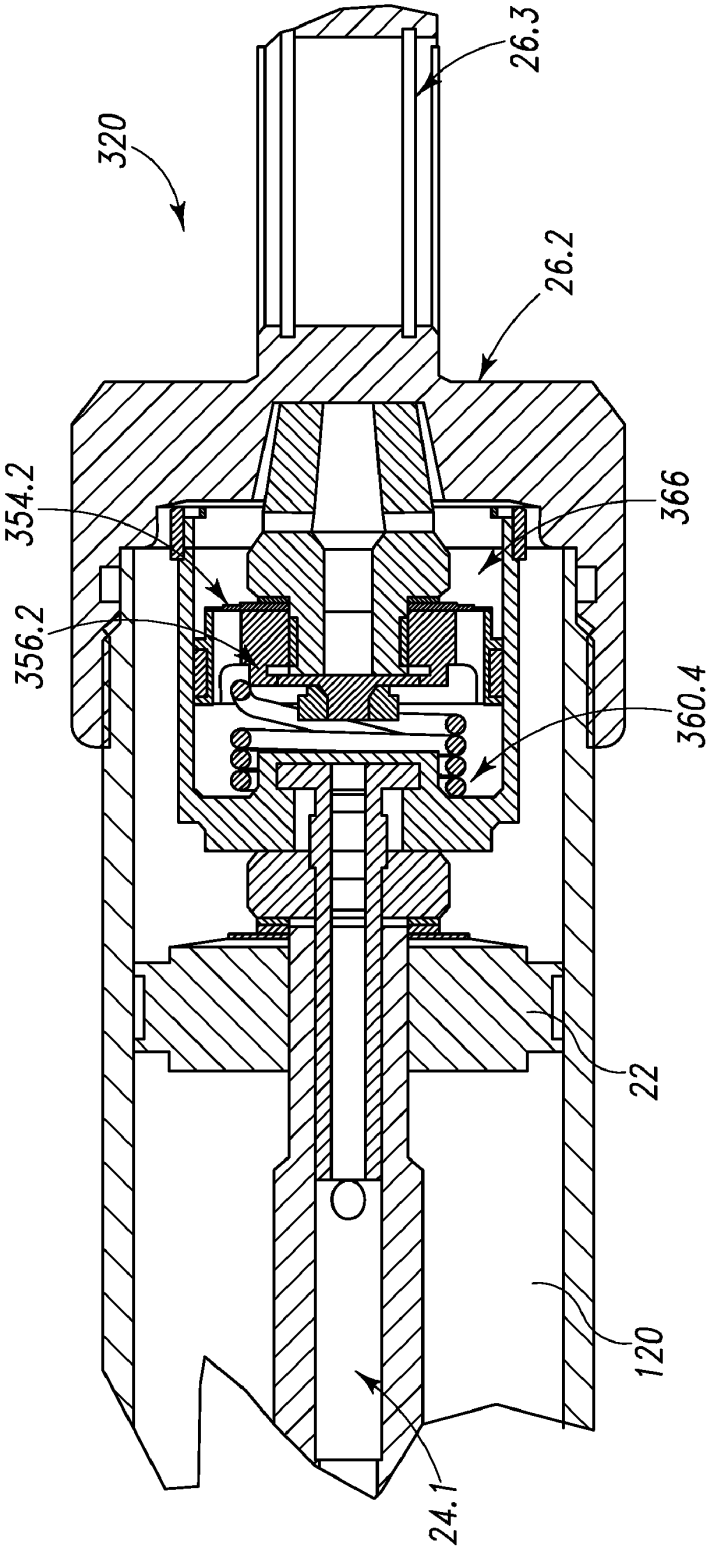

Fig. 11

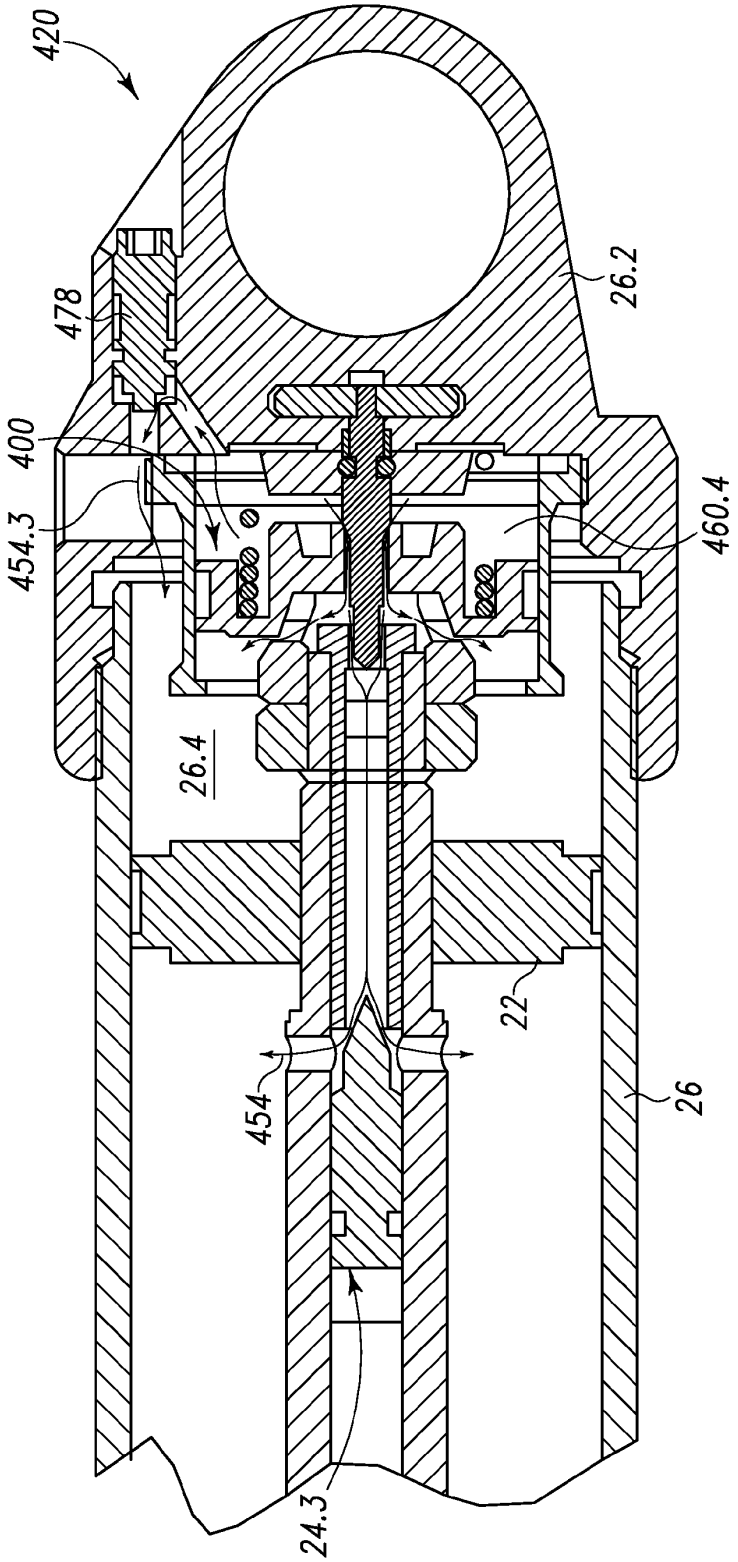

Fig. 12A

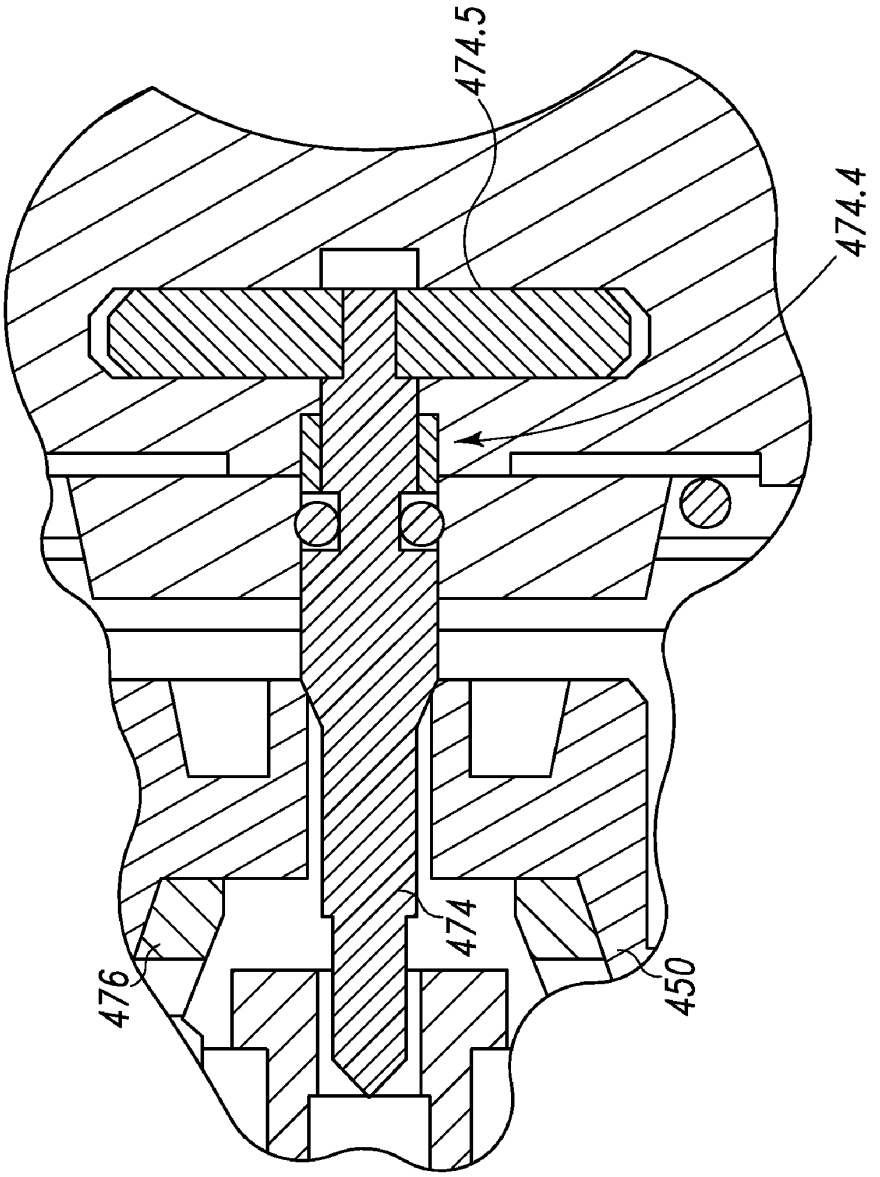

Fig. 12B

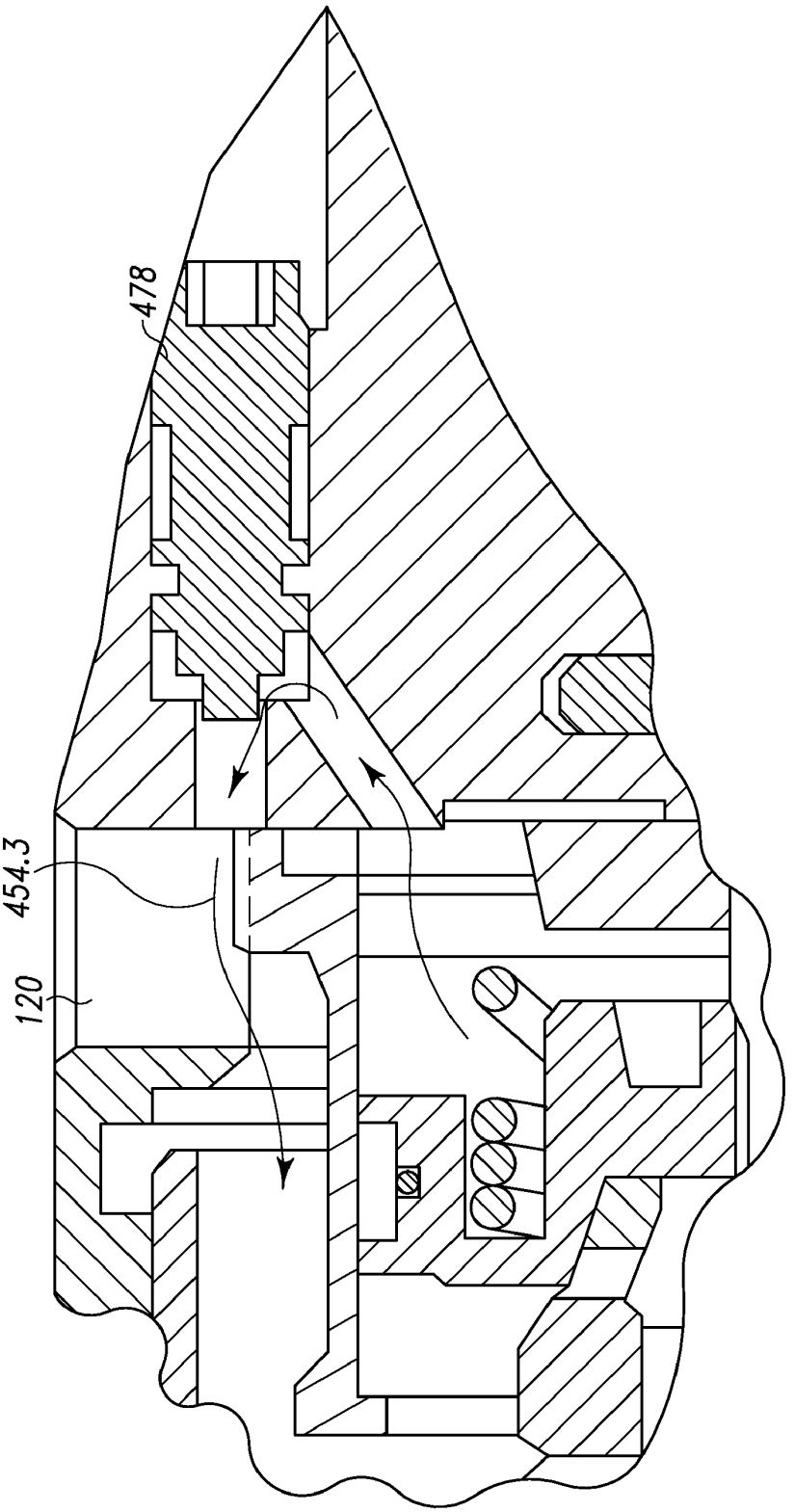

Fig. 12C

SRAM_FOX_CO_000283

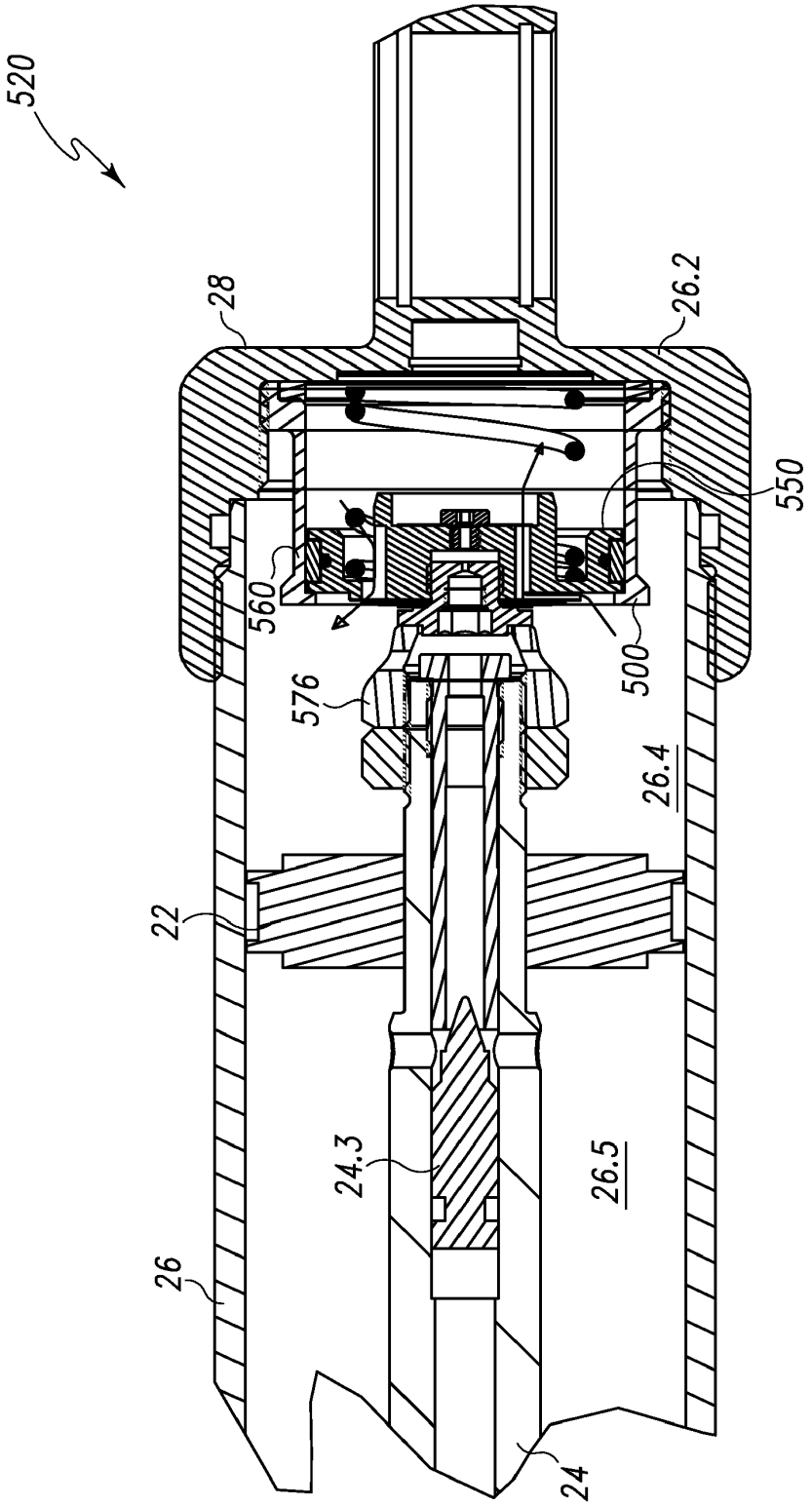

Fig. 13A

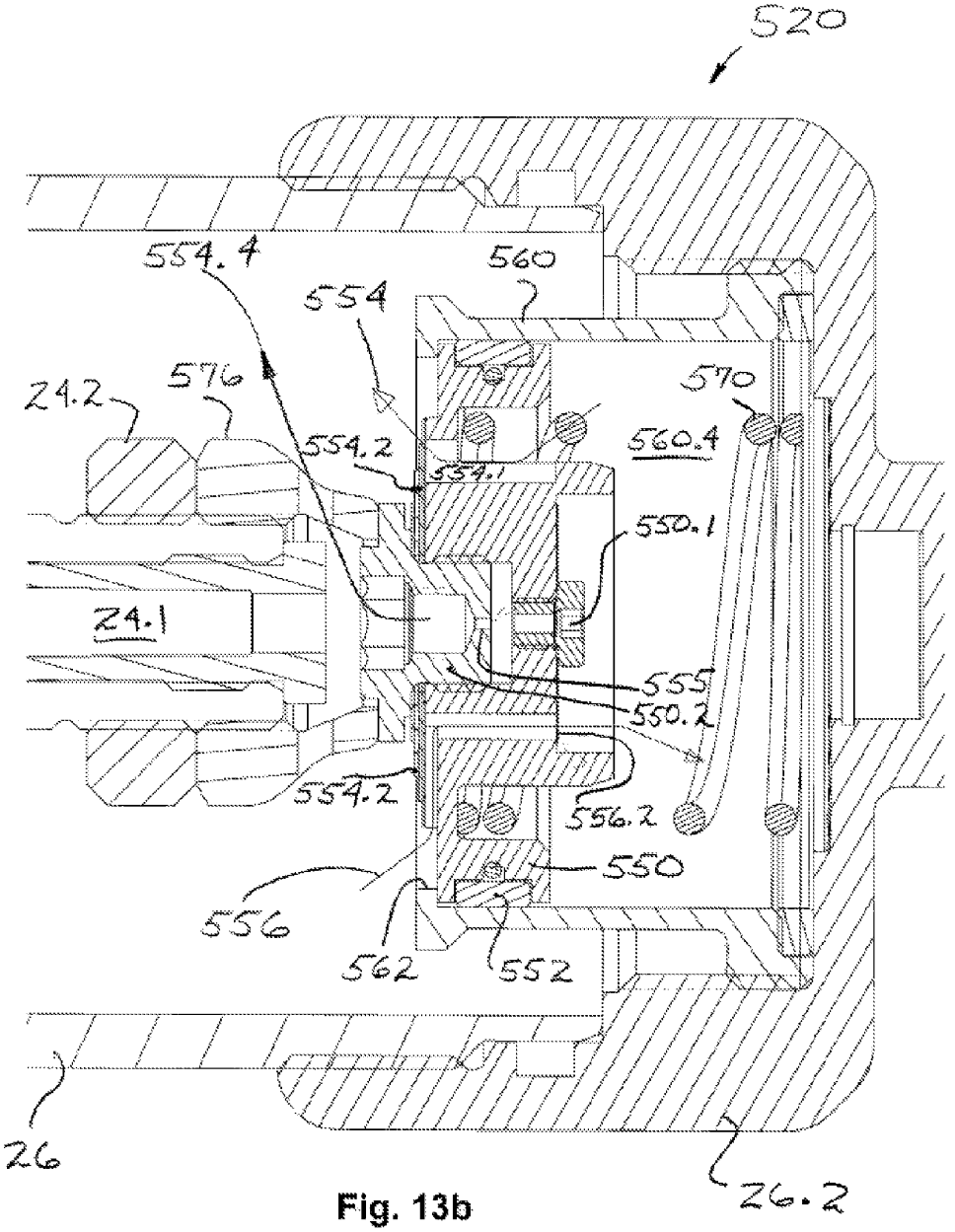
520
554.4
560
554
576
24.2
570
554.2
560.4
554.1
550.1
24.1
555
550.2
554.2
556.2
550
556
562
552
26
26.2

Fig. 13b

METHODS AND APPARATUS FOR PROTECTING A SHOCK ABSORBER FROM BOTTOMING

This application claims priority to U.S. Provisional Patent Application Ser. No. 60/889,050, filed Feb. 9, 2007, incorporated herein in its entirety.

FIELD OF THE INVENTION

The present invention pertains to improvements in shock absorbers, and more particularly to shock absorbers having position-dependent damping force characteristics.

BACKGROUND OF THE INVENTION

Some vehicles travel over surfaces where there are large surface irregularities. One example of such a vehicle would be an all terrain vehicle traveling over an unprepared surface. Yet other vehicles travel at high speeds over hills, with the prospect of becoming airborne at the top of the hill. An example of such a vehicle would be a motorcycle engaged in a motocross race. Yet other vehicles are subjected to relatively infrequent loads that nonetheless fully compress the suspension. An example of such a vehicle is an aircraft landing on an aircraft carrier. In all of these cases, as well as others, there is a need to design the suspension of the vehicle for the possibility that the vehicle suspension will bottom out in compression. Likewise, there is also a need to design vehicle suspensions for the possibility that the suspension will bottom out in rebound.

Various embodiments of the present invention address these situations in novel and unobvious ways.

SUMMARY OF THE INVENTION

Some embodiments of the present invention pertain to shock absorbers having multiple flowpaths for the constrained flow of hydraulic fluid during compression of a vehicle suspension. In some embodiments one or more of these flowpaths are inactive during some portions of the compressive stroke.

Yet other embodiments of the present invention pertain to a shock absorber having within it a second, internal fluid shock absorber comprising a piston and cylinder that are separated by a spring. In some embodiments the spring forces this piston apart from this cylinder. In yet other embodiments there is a mechanical means for keeping the piston within the sliding interior surface of the cylinder.

Some embodiments of the present invention pertain to a shock absorber which has a first, reduced-force compressive characteristic during an initial portion of the compression of the vehicle suspension. There is a second, increased-force characteristic during a latter portion of this compressive stroke.

Yet other embodiments of the present invention pertain to a shock absorber having at least two flowpaths which are active during at least a portion of the compression of the vehicle suspension. A first characteristic provides a relatively constant resisting force during application of a constant compressive stroking velocity. The second compressive characteristic provides a progressively increasing force through a predetermined range of displacement when moved at a relatively constant compressive stroking velocity.

Some embodiments of the present invention pertain to shock absorbers having multiple flowpaths for the constrained flow of hydraulic fluid during rebound of a vehicle suspension. In some embodiments one or more of these flowpaths are inactive during some portions of the rebound stroke.

It will be appreciated that the various apparatus and methods described throughout this application can be expressed as a large number of different combinations and subcombinations. All such combinations and subcombinations are contemplated herein, it being recognized that the explicit expression of each of these myriad combinations is excessive and unnecessary.

These and other features and aspects of different embodiments of the present invention will be apparent from the claims, specification, and drawings.

BRIEF DESCRIPTION OF THE DRAWINGS

FIG. **1***a* is a cutaway view of a prior art shock absorber.

FIG. **1***b* is a cutaway view of another prior art shock absorber.

FIG. **1***c* is a cutaway view of a portion of another prior art shock absorber.

FIG. **2** is a cutaway perspective view of a portion of a shock absorber according to one embodiment of the present invention.

FIG. **3** is a view of the shock absorber FIG. **2** at a different portion of the stroke.

FIG. **4** is a side cutaway view of a portion of the shock absorber of FIG. **2**.

FIG. **5** is a side cutaway view of the shock absorber FIG. **2** during refill.

FIG. **6** is a cutaway perspective view of a shock absorber according to another embodiment of the present invention.

FIG. **7** is a side cutaway view of the shock absorber of FIG. **6** during a different portion of the stroke.

FIG. **8***a* is a cutaway perspective view of the shock absorber of FIG. **7** during a different portion of the stroke.

FIG. **8***b* is a cutaway side view of the shock absorber of FIG. **8***a*.

FIG. **9** is a graphical representation of the compressive force of the shock absorber of FIG. **6** as a function of displacement.

FIG. **10** is a cutaway side view of a shock absorber according to another embodiment of the present invention.

FIG. **11** is a cutaway side view of the shock absorber of FIG. **10** which has been further compressed.

FIG. **12***a* is a cutaway side view of a shock absorber according to another embodiment of the present invention.

FIG. **12***b* is an enlarged portion of a drawing of FIG. **12***a*.

FIG. **12***c* is an enlarged portion of the drawing of FIG. **12***a*.

FIG. **13***a* is a side elevational cutaway view of a portion of shock absorber according to another embodiment of the present invention.

FIG. **13***b* is an enlargement of a portion of the shock absorber of FIG. **13***a*.

DESCRIPTION OF THE PREFERRED EMBODIMENT

For the purposes of promoting an understanding of the principles of the invention, reference will now be made to the embodiments illustrated in the drawings and specific language will be used to describe the same. It will nevertheless be understood that no limitation of the scope of the invention is thereby intended, such alterations and further modifications in the illustrated device, and such further applications of the principles of the invention as illustrated therein being contemplated as would normally occur to one skilled in the art to which the invention relates.

Some embodiments of the present invention pertain to a shock absorber for a vehicle suspension. The shock absorber includes features that increase the damping force when there is significant travel of the vehicle suspension, such that there is a possibility of the suspension reaching a bottoming out condition in either compression or rebound. In these embodiments, the damping characteristics of the shock absorber depend upon not only the relative velocity of one end of the shock absorber relative to the other end, but also the position of one end of the shock absorber relative to the other position.

In some of these embodiments the shock absorber comprises a main piston slidable within a main cylinder, and further a second shock absorbing apparatus contained within the main cylinder. In some embodiments this second shock absorbing apparatus comprises a secondary piston slidable within a secondary cylinder. This second internal shock absorber is located within the main compression volume of the main cylinder. The secondary piston strokes within the secondary cylinder upon application of a force by the elements of the main shock absorber. In some embodiments, the second shock absorber is active to provide a damping force only during a portion of the compressive stroke of the main shock absorber.

Some embodiments of the present invention are adapted and configured to provide a force that opposes compression of the vehicle suspension with a forcing characteristic that increases significantly as the suspension approaches a bottoming condition. In one embodiment, the main shock absorber provides a forcing characteristic that is relatively constant for a constant stroking velocity during the routine movement of the vehicle suspension. However, if the vehicle suspension approaches bottoming out during compression, the forcing characteristic increases (for a constant velocity) as the stroke nears the bottoming condition.

Yet other embodiments of the present invention pertain to shock absorbers adapted and configured as shown and described herein for the protection of a vehicle suspension from bottoming during rebound of the suspension. The embodiments herein can readily be modified to accommodate the main rod that extends through the rebound chamber in some shock absorbers. As one example, the cylindrical inner pistons and inner cylinders can be made annular, such that the rod extends through the central aperture.

Yet other embodiments of the present invention pertaining to a shock absorber having position-dependent forcing characteristics that resist vehicle compression, and which are externally adjustable, and which can include means for externally adjusting a second flow path. In some embodiments there is provided an external adjustment which alters a fixed-orifice flowpath. Yet other embodiments include an external adjustment which changes the relationship of the position-dependent characteristic relative to the stroking position of the main shock absorber.

FIG. **1** shows a cross-sectional view of a prior art shock absorber **20**. A main piston **22** is coupled to a moveable rod **24**, piston **22** being slidably received within the inner diameter **26.1** of a main cylinder **26**. Piston **22** is retained on the end of rod **24** by a coupling nut **24.2**. Main piston **22** generally subdivides the internal volume of cylinder **26** into a compression volume **26.4** located between piston **22** and the compression end **28** of shock **20**, and a second rebound volume **26.5** located between piston **22** and the rebound end **30** of shock **20**. The movement of piston **22** and rod **24** toward rebound end **32** results in a reduction in the size of compression volume **26.1**, and the subsequent flow of hydraulic fluid **20.1** through a compression flowpath **32** in piston **22** and into the simultaneously enlarging rebound volume **26.5**. Likewise, movement of piston **22** toward rebound end **30** of shock **20** results in the flow of hydraulic fluid **20.1** through a rebound flowpath **34** in piston **22** and into the simultaneously enlarging compression volume **26.4**.

In order to compensate for changes in the density of hydraulic fluid **20.1**, shock absorber **20** includes a nitrogen chamber separated by a reservoir piston **38** from the fluid-wetted volume of cylinder **26**.

Shock absorber **20** is typically used with the suspension of a vehicle. Rod **24** includes a first suspension attachment **26.3**, and end cap **26.2** of cylinder **26** includes a second suspension attachment **26.3**. These suspension attachments **26.3** permit the pivotal connection of shock absorber **20** to a portion of the vehicle suspension on one end, and on the other end to a portion of the vehicle frame. It is well known to use shock absorbers on many types of vehicles, including motorcycles, buses, trucks, automobiles, and airplanes. Further, although shock absorber **20** has been referred to for being used on a vehicle, shock absorbers are also known to be used in other applications where it is beneficial to dampen the movement of one object relative to another object, such as dampers for doors.

Compression flowpath **32** includes a fluid passageway interconnecting volumes **26.4** and **26.5** with a one-way valve in the flowpath **32**. This one-way valve can be one or more annular shims which are prevented from flexing in one direction (and thus substantially restricting flow), but able to flex in a different direction (and thus allow flow in this opposite direction). Likewise, rebound flowpath **34** provides fluid communication between volumes **26.4** and **26.5** through a one-way valve. Often, the one-way valve of the compression flowpath **32** has different characteristics than the one-way valve of rebound flowpath **34**.

FIG. **1***b* shows a cross-sectional view of a second prior art shock absorber **20'**. Shock absorber **20'** includes a second, separate cylinder **37'** which includes gas reservoir **40'**. A piston **38'** slidably received within cylinder **37'** separates gas volume **40'** from compression volume **26.4'**. An external fluid connection **39'** interconnects the hydraulic fluid end of piston **37'** with the compression end of shock absorber **20'**. Cylinder **37'** includes a gas port in one end of cylinder **37'** for entry or removal of nitrogen.

Shock absorber **20'** includes means for varying the fluid resistance of a flowpath interconnecting compression volume **26.4'** and rebound volume **26.5'**. Rod **24'** includes an internal passage **24.1'** that extends out one end of shaft **24'**, and extends in the opposite direction towards attachment **26.3'**. The open end of internal passage **24.1'** is in fluid communication with one or more orifices **24.4'** that extend from internal passage **24.1'** to rebound volume **26.5'**. The flow of fluid through this internal passageway between the compression and rebound volumes is restricted by a metering needle **24.3'** received within internal passage **24.1'**. The position of metering needle **24.3'** can be altered by a pushrod **24.6'** also extending within internal passage **24.1'**. Push rod **24.6'** includes an end **24.7'** that is adapted and configured to mate with an internal adjustment screw **24.5'**. The inward adjustment of screw **24.5'** acts on the angled interface to push rod **24.6'** and adjustment needle **24.3'** toward a position of increased resistance in the internal flowpath.

FIG. **1***c* is a cross sectional view of a portion of another prior art shock absorber. The apparatus in FIG. **1***c* shows a piston **22"** coupled to a shaft **24"** by a coupling nut **24.2"**. Shaft **24"** includes an internal flowpath from orifice **22.3"** through internal passage **24.1"** and into shaft orifice **24.4"**. This internal flowpath bypasses piston **22"**.

Piston **22"** includes a pair of shim sets **36"**, each shim set shown including 4 individual washers. During operation in compression (i.e., movement in FIG. **1***c* toward the left) fluid is able to freely enter compression flowpath **28.1"**. However, fluid is unable to exit through flowpath **28.1"** and into the rebound side of the shock absorber unless fluid pressure is sufficiently great to bend the periphery shim stack **36**C" away from the shim edge support **29.4"** of piston **22"**. During operation in rebound, (i.e., movement in FIG. **1***c* toward the right) fluid is able to freely enter compression flowpath **30.1"**. However, fluid is unable to exit through flowpath **30.1"** and into the compression side of the shock absorber unless fluid pressure is sufficiently great to bend the periphery shim stack **36**R" away from the shim edge support **29.4"** of piston **22"**.

A resilient seal **22.1"** substantially seals the compressive side of piston **22"** from the rebound side of piston **22"**. An energizing backup seal **22.2"** urges seal **22.1"** outwardly into contact with the inner wall of the cylinder.

Although what has been shown described is a shock absorber **20** that is linear in operation, the prior art of shock absorbers further includes rotary dampers, such as the toroidal damper disclosed in U.S. Pat. No. 7,048,098, incorporated herein by reference.

As used herein, the word compression refers to the action and direction of the shock absorber during compression of the wheel suspension, this term being synonymous with the term jounce. Therefore, the end of the shock absorber referred to as a compression end is the end which has a reduction in internal volume (due to movement of the piston relative to the cylinder) during compression of the vehicle suspension. The rebound end of the shock absorber is the end that is opposite of the compression end.

FIGS. **2-5** depict a shock absorber **120** according to one embodiment of the present invention. Shock absorber **120** is similar to shock absorber **20**, except for the differences noted herein. The use of an N-series prefix for an element number (NXX) refers to an element that is the same as the non-prefixed element (XX), accept as shown and described thereafter.

Shock absorber **120** includes a second internal shock absorber **100** which actively provides damping only during a portion of the c stroke. Internal shock absorber **100** includes a second piston **150** located within a second cylinder **160**. Piston **150** is coupled to rod **24** by a piston retaining nut **172.2**. Piston **150** is captured within cylinder **160** with a piston retaining member **172.1** that is threaded onto the outer diameter of cylinder **160** after piston **150** is inserted into the interior of cylinder **160**. Preferably, a spring **170** biases piston **150** relative to cylinder **160** such that an interior variable volume **160.4** is formed therebetween. As shown and described herein, shock absorber **120** includes a second internal shock absorber that provides damping during a portion of the compressive stroke. However, the present invention also contemplates those embodiments in which the second internal shock absorber is adapted and configured to provide damping during the rebound stroke.

The outer diameter of piston **150** is adapted and configured to support a seal that discourages any leakage of hydraulic fluid between the inner diameter **160.1** of cylinder **160** and the outer diameter of piston **150**. Preferably, seal **152** is a resilient seal. In some embodiments, seal **152** comprises multiple members, such as an inner spring or o-ring that forces outward a Teflon© seal.

Internal shock absorber **100** includes a first fluid flowpath **154** for the flow of hydraulic fluid during compression of shock **100**, and a second refill flowpath **156** for fluid flowing during the refilling of compression volume **160.4**. Referring to FIG. **4**, arrows indicate the general direction of flowpath **154**. Fluid from compression volume **160.4** flows through one or more orifices or passageways **154.1** in piston **150**. The exit of these passageways from shock **100** is preferably through one or more one-way valves **154.2**. In one embodiment, these one-way valves include one or more shims **36** captured between coupling nut **24.2** and piston **150**. These one-way valves are free to flex open to permit fluid flow out of interior **160.4** into the main compression volume **26.4**. However, the outer edge of at least one of these shims is supported by piston **150**, and is therefore unable to flex in the opposite direction, and thus unable to permit the flow of fluid into volume **160.4**.

FIGS. **2-5** depict the action of shock absorber **120** during compression of a vehicle suspension (not shown). Referring first to FIG. **2**, during the initial stages of the compressive stroke, piston **22** and shock absorber **100** are both moving toward compression end **28** by action of rod **24**. Hydraulic fluid within compression volume **26.4** is being forced through compression flowpath **32** within piston **22**. Piston **22** is active in providing damping during this initial portion of compression stroke. However, both piston **150** and cylinder **160** of shock **100** are moving in unison, with no relative motion there between. Therefore, fluid within compression volume **160.4** remains still within that volume, and shock absorber **100** is inactive during the initial portion of the compression stroke.

Referring to FIG. **3**, during an intermediate portion of the compression stroke the forward face **164** of cylinder **160** contacts the opposing face **26.25** of end cap **26.2**. Preferably, surfaces **164** and **26.25** are adapted and configured to provide a seal that discourages fluid flow there between. In some embodiments, a resilient seal such as an o-ring can be placed within a groove on one of the surfaces to further discourage leakage of fluid from volume **160.4**.

After contact is established between cylinder **160** and end cap **26.2**, further movement of rod **24** toward compression end **28** results in relative movement of piston **150** within cylinder **160**, such that there is a reduction in the internal volume **160.4** available for fluid **20.1**. Fluid is forced to leave interior volume **160.4** by way of compression flowpath **154**, such that shock absorber **100** becomes active in providing a force resisting further compression of the vehicle suspension. In some embodiments, piston **22** is adapted and configured to remain active during the entire stroke in providing a force resisting compression of the suspension, such that the total force opposing compression of the suspension results from the flow characteristics of main compression flowpath **32** and secondary compression flowpath **154**. In some embodiments, the forces resulting from the flow of fluid along flowpath **154** are substantially greater than the forces required to move fluid along main compression flowpath **32**. Second shock absorber **100** actively provides a resistive force as piston **150** slides within cylinder **160**. This relative motion continues until piston **150** reaches a mechanical stop, such as an internal stop within cylinder **160** or bottoming of spring **170**.

FIG. **5** depicts the refilling of internal shock **100**. As the vehicle suspension moves in the rebound direction, rod **24** moves toward rebound end **30** of shock **120**, and piston **160** separates from contact with end cap **26.2**. Since piston **150** has moved away from the inner lip of retaining member **172.1**, it is biased back toward contact with this lip by the action of spring **170**. Spring **170** biases piston **150** relative to cylinder **160** such that compression volume **160.4** increases. Fluid flows back into this volume by means of a refilling flowpath. In one embodiment, fluid is free to flow into a central orifice **165** in cylinder **160**. In some embodiments, there is an alternate refilling flowpath that provides fluid from main rebound volume **26.5**, through one or more refilling

orifices **24.4** into an internal passageway **24.1** of rod **24**, through a refill passageway **156.1** and piston **150**, and through a one-way valve **156.2**. In one embodiment, one-way valve **156.2** is comprised of one or more annular shims trapped between retaining nut **172.2** and piston **150**. However, although one-way valves are described herein comprising one or more shims supported such that they can flex in only one direction, the present invention contemplates other types of one-way valves, including for example a ball in a pocket supported by a spring.

FIGS. **6**, **7**, and **8** depict a shock absorber **220** according to another embodiment of the present invention. Shock **220** includes a second, internal shock absorber **200** according to another embodiment of the present invention. Internal shock **200** includes a cylinder **260** that is coupled to the internal compression end **28** of shock **220**. In one embodiment, cylinder **260** is threadably coupled or otherwise attached to end cap **26.2**. A retaining lip **262** of cylinder **260** captures a piston **250** therein. A spring **270** biases piston **250** away from end **28**, so as to create an internal compression volume **260.4**. In some embodiments, the main cylinder **26** has an inner diameter that is the same as the inner diameter of cylinder **260**.

Shock **220** includes a metering needle **274** having a tip and shaft extending through volume **260.4**. In one embodiment, needle **274** is captured by end cap **26.2**, with the shaft of needle **274** being coaxial with the centerline of shock **220**, and thereby being coaxially aligned with rod **24** and internal passage **24.1**. Further, piston **250** includes within it a central orifice **255** which is adapted and configured to receive within it the tip and shaft of needle **274**. Piston **250** is slidable within the inner diameter of cylinder **260**. Further, in some embodiments, piston **250** is sealed within the inner diameter of cylinder **260** by a resilient seal assembly **252**.

Rod **24** of shock **220** includes a central passage **24.1** which provides fluid communication with rebound volume **26.5**, through a pair of orifices **24.4** and an adjustable main metering needle **24.3**. This central passageway **24.1** is open through the end of rod **24** and through a ram **276** attached to the end of rod **24**. One or more coupling nuts **24.2** hold ram **276** in place. Piston **250** preferably includes a pocket adapted and configured to receive ram **276**.

In those embodiments of the present invention pertaining to protection for bottoming during rebound of the suspension, piston **250** and cylinder **260** are annular, with rod **24** extending through an inner aperture of cylinder **260**. Preferably, the piston seals against the inside surfaces of both the inner wall and outer wall of the cylinder. Preferably, there are a plurality of metering needles **274** equally spaced around the cylinder.

During the initial portion of the compression stroke, the damping forces of shock absorber **220** are provided by a main compression flowpath **32**. As best seen in FIG. **6**, this compression flowpath extends from the central passageway of rod **24** within compression volume **26.4**, past metering needle **24.3**, through orifices **24.4**, and into rebound volume **26.5**. During the initial portion of the compression stroke, second shock absorber **200** is inactive, and does not provide any damping force.

As the vehicle suspension continues to compress, ram **276** of rod **24** comes into contact with the complimentary-shaped pocket of piston **250**. Further, the central passageway **24.1** through rod assembly **24** generally aligns with central orifice **255** of piston **250**. As shock absorber **220** continues in the compression stroke, ram **276** pushes piston **250** relative to cylinder **260**. This relative motion results in a reduction in compression volume **260.4**, and hydraulic fluid **20.1** flows through an annular orifice formed between the outer surface of needle **274** and the central passage **255** of piston **250**. The hydraulic fluid flowing past needle **274** and orifice **255** continues to flow along alternate compression flowpaths **254**. One flowpath flows through a series of orifices in the sidewalls of ram **276** and into compression volume **26.4**. Yet another flowpath continues down central passage **24.1** and into rebound volume **26.5**.

In some embodiments, needle **274** has an exterior shape adapted and configured to provide variable damping characteristics. In one embodiment, the distal end of the metering needle starts with a conical tip, transitions to a generally cylindrical shape, which transitions to a tapered, conical shape over a central portion of needle **274**, and finally to a larger, generally cylindrical final diameter near the end of the needle.

As an illustrative example, in one embodiment the initial diameter of needle **274** is about ½ of the inner diameter of central orifice **255**. The final diameter of the needle is approximately 80% to 95% of the inner diameter of orifice **255**. These two regions of the needle are interconnected with a taper between about 5 degrees to about 11 degrees.

The damping characteristics of one version of this illustrative example are shown in FIG. **9**. The graph of FIG. **9** shows the normalized compressive stroke forces as a function of the normalized displacement of rod **24** as the rod is oscillated at a constant rate. During the initial part of the compression stroke, there is a first compression force characteristic **210** which is relatively constant between 0.2 and 0.25 in a non-dimensional displacement range from about 0.3 to about 0.6. During this initial range, compressive forces are provided by the flow of hydraulic fluid through the main compression flowpath **32**.

At a non-dimensional displacement of about 0.6 to 0.7, contact is achieved between ram **276** and piston **250**. Through the non-dimensional displacement range of about 0.7 to 1.0, there is a much steeper compression characteristic **212** which is a result of the flow of hydraulic fluid through both main compression flowpath **32** and second compression flowpath **254**.

As rod **24** and ram **276** retract away from piston **250**, spring **270** biases piston **250** away from the compression end **28** of shock **220**. As the piston continues to move under the action of spring **270**, compression volume **260.4** refills with hydraulic fluid flowing in the reverse direction along flowpath **254**. A retaining lip **262** of cylinder **260** keeps piston **250** captured within cylinder **260**.

FIGS. **10-11** depict a portion of a shock absorber **320** according to another embodiment of the present invention. Shock absorber **320** includes a second internal shock absorber **300** which is coupled to the end of rod **24**. Shock absorber **300** includes a piston **350** outwardly biased by a spring **370** from the bottom of a cylinder **360**. The bottom end of cylinder **360** is coupled to the end of rod **24**. Piston **360** is captured within cylinder **360** by a piston retaining member **372.1**. Piston **350** and cylinder **360** form a compression volume **360.4** therebetween. Piston **360** includes a one-way valve **354.2** preferably formed by one or more shims in a manner as previously described. One-way valve **354.2** provides controlled resistance to the flow of fluid out of chamber **360.4**, and the discouragement of fluid flow into chamber **360.4**.

Shock absorber **320** includes a ram **376** attached to piston **360**. Preferably, ram **376** includes a central flow passage in fluid communication with a one-way valve **356.2** that form part of a refill flowpath **356** for refilling chamber **360.4** during rebound.

As best seen in FIG. **10**, during the initial portion of the compressive stroke, the resistive force applied by shock

absorber **320** is provided by the flow of fluid through a main compression flowpath **32** as previously described. Internal shock absorber **300** is not active during the initial portion of the stroke.

Referring to FIG. **11**, as ram **376** contacts end cap **26.2** located on the compression end of shock **320** (FIG. **11** showing a portion of ram **376** being received within a pocket of end cap **26.2**), further compressive motion of rod **24** results in the motion of cylinder **360** relative to piston **350**. This relative motion reduces the size of compression volume **360.4**, with fluid **20.1** subsequently flowing through compression flowpath **354**, out of one-way valve **354.2**, and into a reservoir **366** formed by cylinder **360**, end cap **26.2**, and piston **350**. As piston **350** moves relative to cylinder **360**, second shock absorber **300** becomes active and adds to the force of shock absorber **320** which resists compression of the vehicle suspension.

FIGS. **12***a*, **12***b*, and **12***c* are cutaway views of a shock absorber **420** according to another embodiment of the present invention. Shock absorber **420** is the same as shock absorber **220** as previously described, except for the changes which are shown and described herein. Shock absorber **420** includes means for externally adjusting the second flow path as is shown and will be described.

Shock absorber **420** includes one or more features for externally adjusting the damping characteristics of second internal shock absorber **400**. In one embodiment, shock absorber **400** includes two features for externally adjusting the damping of the second compression characteristic (i.e., when the internal shock absorber **400** is active). However, some embodiments include only one of these features to be described.

Shock absorber **400** includes an auxiliary compression flowpath **454.3** that is externally adjustable. As best seen in FIGS. **12***a* and **12***c*, auxiliary path **454.3** includes a first passageway in end cap **26.2** interconnecting compression volume **460.4** with an adjustment screw **478**. The external end of screw **478** is sealed from the fluid environment, and includes an adjustment feature such as an internal hex head or external hex head. The other end of screw **478** is in fluid communication with the first passageway previously described, and also with a second passageway that is in fluid communication with compression volume **26.4**. Screw **478** is threadably received within end cap **26.2**. As the screw is turned along the threads, a nose of screw **478** projects more or less into the second flow passage, and thereby forms more or less of a restriction to flow. Adjustment of screw **478** results in a fixed-characteristic fluid bypass.

In some embodiments, shock absorber **420** includes a second external adjustment feature, as best seen in FIGS. **12***a* and **12***b*. Metering needle **474** is threadably received within end cap **26.2**. One end of the body of needle **474** projects into a slotted adjuster wheel **474.5**. Adjuster wheel **474.5** is externally accessible and turnable by a person's hand. Turning of wheel **474.5** results in axial movement of needle **474** relative to end cap **26.2**. By this axial movement of needle **474**, the metering portions of the shaft are displaced, with a subsequent change in the displacement characteristics of shock absorber **420**. Referring to FIG. **9**, the second compression characteristic of shock **420** can be moved laterally along the displacement axis.

FIGS. **13***a* and **13***b* depict portions of a shock absorber **520** according to another embodiment of the present invention. A shock **520** includes a second internal shock absorber **500** which provides damping during a portion of the stroke of the rod relative to the shock absorber cylinder. Shock **520** is shown partly compressed, with ram **576** making contact with second internal shock absorber **500**. Internal shock **500** includes a cylinder **560** that is coupled to the internal compression and the **28** of shock **520**. In one embodiment, cylinder **560** is threadably coupled to end cap **26.2**. Internal shock absorber **500** includes second piston **550** located within a second cylinder **560**. A retaining ridge **562** of cylinder **560** captures piston **550** therein. A spring **570** biased piston **550** away from end **28**, so as create an internal compression volume **560.4**. A circumferential seal **552** is outwardly biased by a circumferential spring into sealing contact with the inner diameter of piston **560**.

Piston **550** includes a central passage **550.1** through which fluid from volume **560.4** can flow. Further, piston **550** includes a plurality of shims **554.2** which provide a restriction to flow from volume **560.4** through passageway **554.1**, as indicated by compression flowpath arrow **554**. However, valve **554.2** does not present appreciable restriction to a refilling flowpath **556**. Instead, a shim **556.2**, retained on the opposite side of piston **550**, deflects to allow a refilling flow to chamber **560.4**, but substantially prevents flow out of chamber **560.4**. Piston **550** includes a threaded insert **550.2** that includes a central orifice **555** in fluid communication with passageway **550.1** and internal volume **560.4**. As best seen in FIG. **13***b*, insert **550.2** is adapted and configured to abut against the end of ram **576**.

During compression of shock absorber **520**, ram **576** (which is threadably captured to rod **24**) makes contact with threaded insert **550.2**, and any further increase in compression stroke pushes piston **550** relative to cylinder **560**. During this stroking of second internal shock absorber **500**, hydraulic fluid within chamber **560.4** can flow out through parallel compression flowpaths.

One flowpath for hydraulic fluid is through central passage **550.1**, through central orifice **555**, and into internal passage **24.1** of rod **24**. This fluid can pass into compression volume **26.4** by way of flow passages within ram **576** (as indicated by compression flowpath arrow **554.4**), and further through internal passage **24.1**, past the restriction of metering needled **24.3**, and into rebound volume **26.5** (as best seen in FIG. **13***a*). In addition, fluid expelled from volume **560.4** during stroking of piston **550**, can flow via flowpath **554** into compression volume **26.4**. This flowpath is open when the pressure differential across piston **550** is large enough to deflect the one-way valve **554.2**.

When rod **24** retracts, piston **550** is biased to move and refill volume **560.4** and refill volume **560.4** by spring **570**. Hydraulic fluid refills volume **560.4** by way of flowpath **556** past one-way valve **556.2**. Fluid can also refill in a parallel flowpath through orifice **555** and passage **550.1**.

One embodiment of the present invention pertains to an hydraulic shock absorber for damping compression and rebound of a vehicle suspension. The embodiment also includes a first piston coupled to a rod and slidably received within a first cylinder, the first piston and the first cylinder defining a first variable hydraulic volume that reduces in size during rebound of the suspension. A second piston is slidably received and captured within a second cylinder, the second piston and the second cylinder defining a second variable hydraulic volume that reduces in size during rebound of the suspension, the second cylinder being located within the first fluid volume. The second volume refills with hydraulic fluid during compression of the suspension.

Another embodiment of the present invention pertains to a method for damping rebound of a vehicle suspension. The embodiment includes providing a first piston slidably received within a first cylinder and a second piston slidably received within a second cylinder, the second cylinder being

located within the first cylinder, the first piston being in fluid communication with a first flowpath for hydraulic fluid, the second piston being in fluid communication with a second flowpath for the hydraulic fluid. The embodiment includes rebounding the vehicle suspension by a first amount and sliding the first piston relative to the first cylinder during the rebounding by a first amount. The embodiment includes forcing hydraulic fluid through the first flowpath by sliding the first piston during the rebounding by a first amount, and not sliding the second piston relative to the second cylinder during the rebounding by a first amount. The embodiment includes rebounding the vehicle suspension by a second amount following the first amount, sliding the first piston relative to the first cylinder during the rebounding by a second amount, and sliding the second piston relative to the second cylinder during the rebounding by a second amount. The embodiment includes forcing hydraulic fluid through the second flowpath by sliding the second piston during the rebounding by a second amount.

Another embodiment of the present invention pertains to a hydraulic shock absorber for damping compression and rebound of a vehicle suspension. The embodiment includes a first piston coupled to a rod and slidably received within a first cylinder, the first piston and the first cylinder defining a first variable hydraulic volume that reduces in size during rebound of the suspension. The embodiment includes a second piston slidably received within a second cylinder, the second piston and the second cylinder defining a second variable hydraulic volume that reduces in size during rebound of the suspension. The second cylinder is located within the first fluid volume. There is a sealing member between the second piston and the second cylinder for sealing the second volume, wherein the second volume refills with hydraulic fluid during compression of the suspension.

Another embodiment of the present invention pertains to a hydraulic shock absorber for damping rebound of a vehicle suspension which compresses and rebounds. The embodiment includes a first piston coupled to a rod and slidably received within a first cylinder, the first piston and the first cylinder defining a first variable hydraulic volume that reduces in size during rebound of the suspension, at least one of the first piston or the first cylinder defining a first flowpath for fluid during rebound of the suspension. The embodiment includes a second piston slidably received within a second cylinder, the second piston and the second cylinder defining a second variable hydraulic volume that reduces in size during rebound of the suspension, at least one of the second piston or the second cylinder defining a second flowpath for fluid during rebound of the suspension. The embodiment includes a means for externally adjusting the second flowpath independently of the first flowpath.

While the inventions have been illustrated and described in detail in the drawings and foregoing description, the same is to be considered as illustrative and not restrictive in character, it being understood that only the preferred embodiment has been shown and described and that all changes and modifications that come within the spirit of the invention are desired to be protected.

What is claimed is:

1. A hydraulic shock absorber for damping compression of a vehicle suspension, comprising:

a first piston coupled to a rod and slidably received within a first cylinder, said first piston and said first cylinder defining a first variable hydraulic volume that reduces in size during compression of the suspension; and

a second piston slidably received and captured within a second cylinder, said second piston and said second cylinder defining a second variable hydraulic volume that reduces in size during compression of the suspension with fluid exiting the second variable volume flowing along a second flowpath; and

an externally adjustable member for varying the flow characteristics of fluid exiting the second variable volume;

wherein said first piston has a maximum stroke length within said first cylinder from full rebound to full compression, and fluid exits the second variable volume only during the portion of stroke proximate to full compression;

wherein said second piston is attached to said rod;

wherein said second piston includes a one-way valve which permits flow into said second volume but restricts flow out of said second volume;

wherein said rod includes an internal passage which provides fluid communication between said one-way valve and a third variable fluid volume defined by said first piston and said first cylinder that reduces in size during rebound of the suspension.

2. The shock absorber of claim **1** which further comprises a spring, said spring biasing said second piston relative to said second cylinder in a direction to assist refilling of said second volume.

3. The shock absorber of claim **1** wherein said first variable volume has a first maximum size, said second variable volume has a second maximum size, and the first maximum size is greater than the second maximum size.

4. The shock absorber of claim **1** wherein said first cylinder has a first inner diameter, said second cylinder has a second inner diameter, and the first inner diameter is greater than the second inner diameter.

5. The shock absorber of claim **1** which further includes a resilient seal, said seal sealing said second piston within said second cylinder.

6. The shock absorber of claim **1** wherein said second cylinder is attached to said rod.

7. The shock absorber of claim **1** wherein said second piston includes a one-way valve which permits flow out of said second volume but restricts flow into said second volume.

8. The shock absorber of claim **1** wherein said valve includes at least one annular shim.

9. The shock absorber of claim **1** wherein said second cylinder is attached to said first cylinder.

10. The shock absorber of claim **9** wherein said second piston includes a hydraulic fluid metering orifice, said adjustable member comprises a metering needle, wherein said needle is received within said orifice during compression.

11. The shock absorber of claim **10** wherein said needle is tapered to reduce the flow area of said orifice as the suspension compresses.

12. The shock absorber of claim **9** wherein said rod includes an internal passage which provides fluid communication between said first volume and a third variable fluid volume defined by said first piston and said first cylinder that reduces in size during rebound of the suspension

13. The shock absorber of claim **9** wherein said second piston includes a plurality of parallel flowpaths providing fluid communication from the second hydraulic volume to the first hydraulic volume.

14. The shock absorber of claim **1** wherein said shock absorber includes an orifice, and wherein adjustment of said externally adjustable member changes a flow area of the orifice.

15. A method for damping compression of a vehicle suspension, comprising:

providing a first piston slidably received within a first cylinder and a second piston slidably received within a second cylinder, the second piston being captured within the second cylinder, the first piston being in fluid communication with a first flowpath for hydraulic fluid, the second piston being in fluid communication with a second flowpath for the hydraulic fluid;

compressing the vehicle suspension by a first amount;

sliding the second piston relative to the first cylinder during said compressing by the first amount;

sliding the first piston relative to the first cylinder during said compressing by the first amount;

forcing hydraulic fluid through the first flowpath by said sliding the first piston during said compressing by the first amount;

not sliding the second piston relative to the second cylinder during said compressing by the first amount;

compressing the vehicle suspension by a second amount following the first amount;

sliding the first piston relative to the first cylinder during said compressing by the second amount;

sliding the second piston relative to the second cylinder during said compressing by the second amount;

forcing hydraulic fluid through the second flowpath by said sliding the second piston during said compressing by the second amount and achieving a first damping force characteristic; and

externally adjusting the second flowpath to achieve a second damping force characteristic different than the first damping force characteristic.

16. The method of claim **15** which further comprises biasing the second piston relative to the second cylinder to refill the second cylinder with hydraulic fluid during rebounding of the suspension following said sliding the second piston by the second amount.

17. The method of claim **15** wherein the second cylinder and the first cylinder are located along the same axis.

18. A hydraulic shock absorber for damping compression of a vehicle suspension, comprising:

a first piston coupled to a first rod and slidably received within a first cylinder, said first piston and said first cylinder defining a first variable hydraulic volume that reduces in size during compression of the suspension;

a second piston slidably received within a second cylinder, said second piston and said second cylinder defining a second variable hydraulic volume that reduces in size during compression of the suspension, said second cylinder being located within said first fluid volume, said second piston including an aperture providing fluid communication between said first volume and said second volume; and

a metering rod received within the aperture, said second piston being movable relative to said metering rod;

wherein movement of said piston relative to said metering rod changes the flow characteristic for fluid flowing between said first volume and said second volume.

19. The shock absorber of claim **18** which further comprises a spring biasing apart said second cylinder from said second piston.

20. The shock absorber of claim **18** wherein said metering rod includes a tapered portion.

21. The shock absorber of claim **18** wherein the position of said metering rod is externally adjustable.

22. The shock absorber of claim **18** wherein said first piston and said first cylinder define a third variable hydraulic volume that increases in size during compression of the suspension, said first rod includes a central flowpath providing fluid communication between said first volume and said third volume, said metering rod includes an end, and the end is received within the central flowpath.

23. The shock absorber of claim **18** wherein said second cylinder includes a flowpath from the second volume to the first volume.

24. The shock absorber of claim **23** wherein the pressure drop characteristics of the flowpath are externally adjustable.

25. The shock absorber of claim **18** which further comprises a spring, said spring biasing said second piston relative to said second cylinder in a direction to assist refilling of said second volume.

26. The shock absorber of claim **18** wherein said second piston is captured within said second cylinder.

27. The shock absorber of claim **18** wherein said first rod includes a central flowpath for the flow of hydraulic fluid, said metering rod includes an end, and the end is received within the central flowpath.

28. The shock absorber of claim **18** wherein said first piston has a maximum stroke length within said first cylinder from full rebound to full compression, and fluid exits the second variable volume only during the portion of stroke proximate to full compression.

29. A hydraulic shock absorber for damping compression of a vehicle suspension which compresses and rebounds, comprising:

a first piston coupled to a rod and slidably received within a first cylinder, said first piston and said first cylinder defining a first variable hydraulic volume that reduces in size during compression of the suspension, at least one of said first piston or said first cylinder defining a first flowpath for fluid during compression of the suspension;

a second piston slidably received within a second cylinder, said second piston and said second cylinder defining a second variable hydraulic volume that reduces in size during compression of the suspension, at least one of said second piston or said second cylinder defining at least part of a second flowpath for fluid flowing out of said second variable volume during compression of the suspension; and

means for externally adjusting the flow characteristics of said second flowpath;

wherein said means for externally adiustinq is a first means, and which further comprises second means for externally adiustinci said second flowpath, said first means being independently adiustable relative to said second means.

30. The shock absorber of claim **29** wherein said first flowpath has a first forcing characteristic which resists compression of the vehicle suspension, said second flowpath has a second forcing characteristic which resists compression of the vehicle suspension, and second characteristic applies greater force to the suspension than the first characteristic.

31. The shock absorber of claim **29** wherein said first piston has a maximum stroke length within said first cylinder from full rebound to full compression, and fluid exits the second variable volume only during the portion of stroke proximate to full compression.

32. The shock absorber of claim **29** wherein said means for adjustment adjusts a fixed flow area of a portion of said second flowpath.

33. The shock absorber of claim **29** wherein said second flowpath includes a projection receivable within an orifice, and said means for adjustment changes the positional relationship of said projection relative to the orifice.

34. The shock absorber of claim **29** wherein second piston includes the second flowpath, and the second flowpath includes a one-way valve adapted and configured to restrict flow from flowing out of the second hydraulic volume.

35. The shock absorber of claim **29** wherein said second cylinder is received within said first variable volume.

36. The shock absorber of claim **29** wherein the second flowpath is from said second variable volume to said first variable volume.

37. The shock absorber of claim **29** wherein said rod has an end, and the end of said rod is not attached to said second piston.

38. The shock absorber of claim **29** wherein said second piston includes an orifice providing fluid communication between said second variable volume and said first variable volume, said first means fixes a flow area, and said second means includes a metering member received with the orifice.

39. The shock absorber of claim **29** wherein said second piston includes an orifice providing fluid communication between said second variable volume and said first variable volume, and which further comprises a metering member received with the orifice.

40. The shock absorber of claim **29** wherein the position of the metering member is adjustable relative to said second cylinder.

41. The shock absorber of claim **29** wherein said second piston is captured within said second cylinder and which further comprises a spring for biasing said second piston relative to said second cylinder.

42. A hydraulic shock absorber for damping compression of a vehicle suspension, comprising:

a first piston coupled to a rod and slidably received within a first cylinder, said first piston and said first cylinder defining a first variable hydraulic volume that reduces in size during compression of the suspension; and

a second piston slidably received and captured within a second cylinder, said second piston and said second cylinder defining a second variable hydraulic volume that reduces in size during compression of the suspension with fluid exiting the second variable volume flowing along a second flowpath; and

an externally adjustable member for varying the flow characteristics of fluid exiting the second variable volume;

wherein said first piston has a maximum stroke length within said first cylinder from full rebound to full compression, and fluid exits the second variable volume only during the portion of stroke proximate to full compression;

wherein said second cylinder is attached to said first cylinder;

wherein said second piston includes a hydraulic fluid metering orifice, said adjustable member comprises a metering needle, wherein said needle is received within said orifice during compression.

43. The shock absorber of claim **42** which further comprises a spring, said spring biasing said second piston relative to said second cylinder.

44. The shock absorber of claim **42** wherein said first variable volume has a first maximum size, said second variable volume has a second maximum size, and the first maximum size is greater than the second maximum size.

45. The shock absorber of claim **42** wherein said first cylinder has a first inner diameter, said second cylinder has a second inner diameter, and the first inner diameter is greater than the second inner diameter.

46. The shock absorber of claim **42** which further includes a resilient seal, said seal sealing said second piston within said second cylinder.

47. The shock absorber of claim **42** wherein said second piston includes a one-way valve.

48. The shock absorber of claim **42** wherein said rod includes an internal passage which provides fluid communication between said first volume and a third variable fluid volume defined by said first piston and said first cylinder.

49. The shock absorber of claim **42** wherein said needle is tapered to reduce the flow area of said orifice as the suspension compresses.

50. The shock absorber of claim **42** wherein said second piston includes a plurality of parallel flowpaths providing fluid communication from the second hydraulic volume to the first hydraulic volume.

51. The shock absorber of claim **42** wherein said shock absorber includes an orifice, and wherein adjustment of said externally adjustable member changes a flow area of the orifice.

52. A hydraulic shock absorber for damping compression of a vehicle suspension which compresses and rebounds, comprising:

a first piston coupled to a rod and slidably received within a first cylinder, said first piston and said first cylinder defining a first variable hydraulic volume that reduces in size during compression of the suspension, at least one of said first piston or said first cylinder defining a first flowpath for fluid during compression of the suspension;

a second piston slidably received within a second cylinder, said second piston and said second cylinder defining a second variable hydraulic volume that reduces in size during compression of the suspension, at least one of said second piston or said second cylinder defining at least part of a second flowpath for fluid flowing out of said second variable volume during compression of the suspension; and

means for externally adjusting the flow characteristics of said second flowpath;

wherein said second piston includes an orifice providing fluid communication between said second variable volume and said first variable volume, and which further comprises a metering member received with the orifice.

53. The shock absorber of claim **52** wherein said first flowpath has a first forcing characteristic which resists compression of the vehicle suspension, said second flowpath has a second forcing characteristic which resists compression of the vehicle suspension, and second characteristic applies greater force to the suspension than the first characteristic.

54. The shock absorber of claim **52** wherein said first piston has a maximum stroke length within said first cylinder from

full rebound to full compression, and fluid exits the second variable volume only during the portion of stroke proximate to full compression.

55. The shock absorber of claim **52** wherein said means for adjustment adjusts a fixed flow area of a portion of said second flowpath.

56. The shock absorber of claim **52** wherein said second flowpath includes a projection receivable within an orifice, and said means for adjustment changes the positional relationship of said projection relative to the orifice.

57. The shock absorber of claim **52** wherein said second cylinder is received within said first variable volume.

58. The shock absorber of claim **52** wherein the second flowpath is from said second variable volume to said first variable volume.

59. The shock absorber of claim **52** wherein said rod has an end, and the end of said rod is not attached to said second piston.

60. The shock absorber of claim **52** wherein said second piston is captured within said second cylinder and which further comprises a spring for biasing said second piston relative to said second cylinder.

* * * * *

UNITED STATES PATENT AND TRADEMARK OFFICE

CERTIFICATE OF CORRECTION

PATENT NO. : 8,162,112 B2
APPLICATION NO. : 12/029112
DATED : April 24, 2012
INVENTOR(S) : Bill J. Gartner et al.

It is certified that error appears in the above-identified patent and that said Letters Patent is hereby corrected as shown below:

On the title page, item [73] Assignee should be as follows:

--Competition Tire East, d/b/a Custom Axis, Reading, PA (US)--.

In claim 29, col. 14, line 53, delete "adiustinci" and insert in lieu thereof --adjusting--.

Signed and Sealed this
Eighteenth Day of December, 2012

David J. Kappos

David J. Kappos
Director of the United States Patent and Trademark Office

SRAM_FOX_CO_000295