Trials@uspto.gov
571-272-7822

Paper No. 13
Date: February 21, 2024

UNITED STATES PATENT AND TRADEMARK OFFICE

BEFORE THE PATENT TRIAL AND APPEAL BOARD

SRAM, LLC,
Petitioner,

v.

FOX FACTORY, INC.,
Patent Owner.

IPR2023-01301
Patent 9,739,331 B2

Before MEREDITH C. PETRAVICK, JEREMY M. PLENZLER, and FRANCES L. IPPOLITO, *Administrative Patent Judges.*

IPPOLITO, *Administrative Patent Judge*.

DECISION
Denying Institution of *Inter Partes* Review
35 U.S.C. § 314(a)

I. INTRODUCTION

SRAM, LLC filed a Petition (Paper 3, "Pet.") requesting an *inter partes* review of claims 1–8 of U.S. Patent No. 9,739,331 B2 (Ex. 1001, "the '331 patent"). FOX Factory, Inc. ("Patent Owner") filed a Preliminary Response to the Petition (Paper 9, "Prelim. Resp.").

Under 35 U.S.C. § 314(a), an *inter partes* review may not be instituted unless the information presented in the Petition and any response thereto shows "there is a reasonable likelihood that the petitioner would prevail with respect to at least 1 of the claims challenged in the petition."

Upon consideration of the Petition, Preliminary Response, and the evidence of record, we determine that the information presented in the Petition does not establish a reasonable likelihood that Petitioner would prevail in showing the unpatentability of at least one of the challenged claims.

Accordingly, we do not institute *inter partes* review of claims 1–8 of the '331 patent based on the grounds raised in the Petition.

II. BACKGROUND

A. Related Matters

The parties identify the following United States District Court actions as involving the '331 patent: *Fox Factory, Inc. v. SRAM, LLC*, No. 1:23-cv-00313-RM-KLM (D. Colo.) and *FOX Factory, Inc. v. SRAM, LLC*, No. 2:22-cv-04805-DOC-JC (C.D. Cal.) (transferred to D. Colo.). Pet. 103; Paper 5, 1.

In addition to the instant Petition, Petitioner filed a second petition challenging the '331 patent in IPR2023-01302. Paper 5, 1; *see also* Paper 2 ("Petitioner's Explanation of Two Petitions").

B. Real Parties in Interest

Petitioner identifies itself as the real party in interest. Pet. 103. Patent Owner identifies itself and FOX Factory Holding Corp. as the real parties in interest. Paper 5, 1.

C. The '331 patent

The '331 patent, titled "Method and Apparatus for an Adjustable Damper," relates to components "useful for equalizing ambient pressure within [a] vehicle suspension." Ex. 1001, code (54), 1:26–30. Figure 1 of the '331 patent, reproduced below, shows a front bicycle fork. *Id.* at 1:61–62.

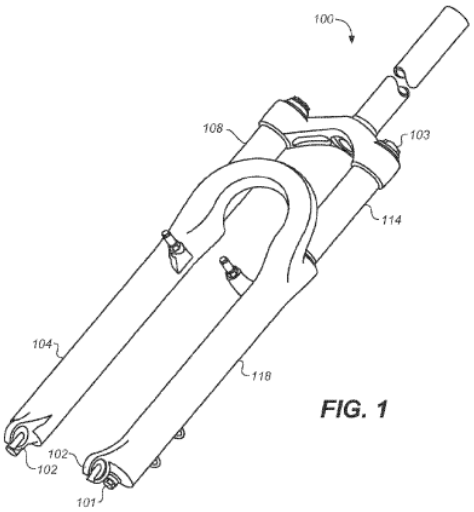

FIG. 1

Figure 1 of the '331 patent depicts front fork 100 having a damper for suspension that includes lower fork tube 118 connected to upper fork tube 114, and a spring (not shown) for rebounding within lower fork tube 104 that is connected to upper fork tube 108. *Id.* at 2:20–24, 3:5–13. Movement of upper fork tube 114 causes a piston to move axially within a damper body and fluid is displaced in a compression chamber, some of which flows through an orifice into a reservoir. *Id.* at 3:23–31. A button (150 shown in Figure 3), "positioned on a die-cast feature of the lower leg," is provided to

allow a rider to push and let pressure in the lower leg equalize to ambient pressure at high elevation and "restore a lower-friction fork." *Id.* at 3:65–4:1, 4:13–16.

Figure 4 of the '331 patent, reproduced below, shows a positioning of an air bleed assembly relative to an oil bath lubrication in a lower leg tube. *Id.* at 2:1–3.

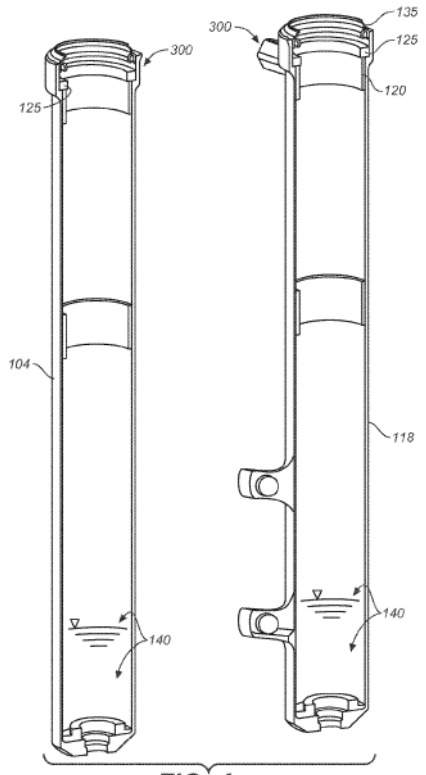

FIG. 4

Figure 4 of the '331 patent shows a cross-sectional view of lower fork tube 118 on the right side and lower fork tube 104 on the left side of front fork 100 of Figure 1, along with the positioning of an air bleed assembly relative to an oil bath. *Id.* at 4:28–30. Lower fork tube 118 includes oil bath 140 and lower leg seal 135 that seals the fork "to prevent the lower leg oil bath lubrication from leaking out of the fork." *Id.* at 4:1–6. Lower fork tube 118 also includes air bleed assembly 300 that "is located right below the lower

leg seal 135 so that when excessive air pressure in the fork is relieved at high elevation, the oil bath 140 [is] typically leveled" and does not spray or leak out. *Id.* at 4:3–7. Air bleed assembly 300 along with a vent hole (154 shown in Figure 2) are located between the seal and upper brushing 120. *Id.* at 4:17–19.

D. The Challenged Claims

Petitioner challenges claims 1–8 of the '331 patent. Pet. 1. Of the challenged claims, claim 1 is independent. Claim 1 is reproduced below:

> [1pre] A lower fork and air bleed assembly combination comprising:
>
> [1a] a lower fork, said lower fork configured to have a first end coupled to a vehicle wheel, and a second end configured to be telescopically engaged with a first end of an upper fork, said lower fork further comprising:
>
> [1b] a lower leg seal located at an outermost edge of said second end of said lower fork tube, said lower leg seal configured for sealing closed a gap disposed between said upper fork tube and said lower fork tube when said lower fork is telescopically engaged with said first end of said upper fork, thereby preventing an oil bath lubrication occupying an area within said lower fork tube at a first end of said lower fork tube from leaking from said lower fork; and
>
> [1c] an upper bushing attached to and positioned adjacent to said lower leg seal; and
>
> [1d] an air bleed assembly disposed on said lower fork tube, said air bleed assembly configured for equalizing ambient pressure within said lower fork, said air bleed assembly comprising:
>
> [1e] a fluid passage disposed between an interior of said lower fork and an exterior of said lower fork; and
>
> [1f] a manually operable valve located in said lower fork and coupled to said fluid passage, said manually operable valve having a first position substantially closing said fluid

passage and a second position allowing a fluid to flow between said interior and said exterior, said manually operable valve disposed between said lower leg seal and said first end of said lower fork, and

[1g] wherein said fluid passage and said manually operable valve are located at a distance from an oil bath lubrication within said lower fork, such that when said manually operable valve is in said second position, most, if not all of said oil bath lubrication remains within said lower fork and such that when trapped air pressure inside said lower fork, that is higher than a local ambient air pressure outside of said suspension fork or shock absorber, is relieved most, of said oil bath lubrication that is within said lower fork remains within said lower fork.

Ex. 1001, 4:39–5:13 (bracketed designations added by Petitioner (*see* Pet. vii–viii, 20–31, 47–60, 74–80)).

E. Asserted Grounds of Unpatentability

Petitioner asserts the following grounds of unpatentability:

Claim(s) Challenged	35 U.S.C. §	Reference(s)/Basis
1–3, 5	102	Kojima[1]
1–8	103	Becker,[2] Bruckbauer[3]
5, 6	103	Becker, Bruckbauer, Danter[4]
1–8	103	Kojima, Bruckbauer, Danter
3–8	103	Kojima, Huang[5]

[1] Certified translation of JP 2004-345366 A, published Dec. 9, 2004 and original Japanese language version (Ex. 1005, "Kojima").
[2] US 6,592,136 B2, issued July 15, 2003 (Ex. 1008, "Becker").
[3] US 7,231,939 B1, issued June 19, 2007 (Ex. 1009, "Bruckbauer").
[4] EP 0979772 A2, published Feb. 16, 2000 (Ex. 1010, "Danter").
[5] US 7,624,752 B2, issued Dec. 1, 2009 (Ex. 1007, "Huang").

Pet. 17–102. In addition to the references listed above, Petitioner relies on the Declarations of Eric Wang, Ph.D. (Ex. 1002), Kevin Wesling (Ex. 1003), and Michael J. Hickey (Ex. 1015).

III. ANALYSIS

A. Principles of Law

Petitioner bears the burden of demonstrating a reasonable likelihood that it would prevail with respect to at least one challenged claim for a petition to be granted. 35 U.S.C. § 314(a). This burden of persuasion never shifts to Patent Owner. *See Dynamic Drinkware, LLC v. Nat'l Graphics, Inc.*, 800 F.3d 1375, 1378 (Fed. Cir. 2015) (discussing the burden of proof in *inter partes* review).

"A claim is anticipated only if each and every element as set forth in the claim is found, either expressly or inherently described, in a single prior art reference." *Verdegaal Bros. v. Union Oil Co. of California*, 814 F.2d 628, 631 (Fed. Cir. 1987). The elements must be arranged as required by the claim, but this is not an *ipsissimis verbis* test, i.e., identity of terminology is not required. *In re Bond*, 910 F.2d 831 (Fed. Cir. 1990).

A patent claim is unpatentable for obviousness if the differences between the claimed subject matter and the prior art are such that the subject matter, as a whole, would have been obvious at the time the invention was made to a person having ordinary skill in the art to which said subject matter pertains. *KSR Int'l Co. v. Teleflex Inc.*, 550 U.S. 398, 406 (2007). In *Graham v. John Deere Co.*, 383 U.S. 1 (1966), the Supreme Court set out a framework for assessing obviousness that requires consideration of four factors: (1) the "level of ordinary skill in the pertinent art," (2) the "scope and content of the prior art," (3) the "differences between the prior art and

the claims at issue," and (4) "secondary considerations" of nonobviousness such as "commercial success, long felt but unsolved needs, failure of others, etc." *Id.* at 17–18; *KSR*, 550 U.S. at 407.

"Whether an ordinarily skilled artisan would have been motivated to modify the teachings of a reference is a question of fact." *WBIP, LLC v. Kohler Co.*, 829 F.3d 1317, 1327 (Fed. Cir. 2016) (citations omitted). "[W]here a party argues a skilled artisan would have been motivated to combine references, it must show the artisan 'would have had a reasonable expectation of success from doing so.'" *Arctic Cat Inc. v. Bombardier Recreational Prods. Inc.*, 876 F.3d 1350, 1360–61 (Fed. Cir. 2017) (quoting *In re Cyclobenzaprine Hydrochloride Extended-Release Capsule Patent Litig.*, 676 F.3d 1063, 1068–69 (Fed. Cir. 2012)).

B. Level of Ordinary Skill in the Art

In determining the level of skill in the art, we consider the type of problems encountered in the art, the prior art solutions to those problems, the rapidity with which innovations are made, the sophistication of the technology, and the educational level of active workers in the field. *Custom Accessories, Inc. v. Jeffrey-Allan Indus. Inc.*, 807 F.2d 955, 962 (Fed. Cir. 1986); *Orthopedic Equip. Co. v. United States*, 702 F.2d 1005, 1011 (Fed. Cir. 1983).

Petitioner contends that a person of ordinary skill in the art "would have a degree in Mechanical Engineering and at least three years' experience in vehicle suspension technology, or a Master's degree in Mechanical Engineering with a concentration in design of vehicle suspension technology and/or shock absorbers." Pet. 2, n.1 (citing Ex. 1002 ¶ 33; Ex. 1003 ¶ 29).

Patent Owner does not dispute Petitioner's proposed definition. *See generally*, Prelim. Resp.

For purposes of this Decision, we adopt the definition of the level of ordinary skill in the art proposed by Petitioner as reasonable and consistent with the prior art. *See Okajima v. Bourdeau*, 261 F.3d 1350, 1355 (Fed. Cir. 2001) (the prior art may reflect an appropriate level of skill in the art).

C. Claim Construction

In an *inter partes* review proceeding, the Board interprets claim language using the same claim construction standard that would be used in a civil action under 35 U.S.C. § 282(b), as described in *Phillips v. AWH Corp.*, 415 F.3d 1303 (Fed. Cir. 2005) (en banc). *See* 37 C.F.R. § 42.100(b). Under that standard, we generally give claim terms their ordinary and customary meaning, as would be understood by a person of ordinary skill in the art at the time of the invention, in light of the language of the claims, the specification, and the prosecution history. *See Phillips*, 415 F.3d at 1313–14. Although extrinsic evidence, when available, may also be useful when construing claim terms under this standard, extrinsic evidence should be considered in the context of the intrinsic evidence. *See id.* at 1317–19.

Petitioner contends that claim construction is not necessary. Pet. 8. Nonetheless, Petitioner contends that because of prosecution history disclaimer, the claim term "air bleed assembly disposed on said lower fork tube" should be construed as "air bleed assembly located between the lower leg seal and the upper bushing." *Id.* at 11 (citing Ex. 1014, 7).

Patent Owner contends that this claim term should be accorded its plain and ordinary meaning. Prelim. Resp. 13. In particular, Petitioner argues that "[t]he claim language itself makes it clear that the 'air bleed

assembly' is located on the lower fork between the lower leg seal and a resting level of the oil bath in the lower fork." *Id.* (citing Ex. 1001, 4:56–5:4).

Based on our review of the parties' arguments and evidence, no construction is necessary to resolve the parties' disputes. *Vivid Techs., Inc. v. Am. Sci. & Eng'g, Inc.*, 200 F.3d 795, 803 (Fed. Cir. 1999) ("[O]nly those terms need be construed that are in controversy, and only to the extent necessary to resolve the controversy.").

D. Overview of the Prior Art

1. Summary of Kojima (Ex. 1005)

Kojima is titled "Suspension Device." Ex. 1005, code (54). Kojima relates to suppressing or damping shocks and vibrations imparted to the frame of a bicycle. *Id.* ¶ 1.

Figure 2 of Kojima, reproduced below, is an enlarged view near the front suspension of a mountain bike. *Id.* ¶ 21.

[Fig. 2]

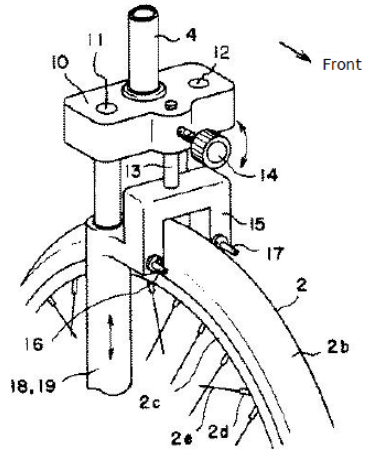

The Front Suspension in Fig. 1

Figure 2 of Kojima depicts a front suspension having a pair of rod-shaped inner shafts 11 and 12 and a pair of cylindrical bottom cases 18 and 19. *Id.*

¶¶ 23–24. The lower ends of inner shafts 11 and 12 are slidably inserted into bottom cases 18 and 19, respectively, for shock absorption. *Id.* ¶ 24.

Figure 9 of Kojima, reproduced below, is cross-sectional view of the front suspension of a mountain bike. *Id.* ¶ 74.

[Fig. 9]

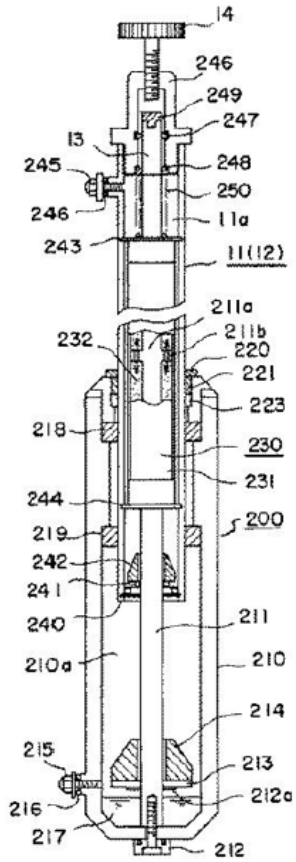

The Sixth Embodiment of the Present Invention

Figure 9 of Kojima depicts front suspension 200 having "an air spring-plus-oil damper structure" with bottom case 210 that is slidably attached to inner shafts 11 and 12 of Figure 1. *Id.* ¶ 75–76. In particular, Kojima discloses that

> [a]n air valve 215 is screwed into the lower side wall of the bottom case 210 via an O-ring 216 serving as an air seal. The bottom portion inside the bottom case 210 forms an oil bath, and lubricating oil 217 is enclosed in this portion (at, for example,

> enclosure viscosity of 10 wt to 15 wt) to reduce the sliding resistance and smooth operations between the inner shaft 11 and the slide bushes 218, 219 and the various seals 220, 221, 223, and to improve the airtightness of the air chamber 210a.

Id. ¶ 77.

2. Summary of Becker (Ex. 1008)

Becker is titled "Bicycle Fork Cartridge Assembly." Ex. 1008, code (54). Becker discloses "[a]n off-road bicycle suspension fork" that "includes a pair of fork leg assemblies," each having "an upper leg telescopingly engaged with a lower leg." *Id.*, code (57).

Figure 3 of Becker, reproduced below, is a cross-section of a suspension fork. *Id.* at 4:57–58.

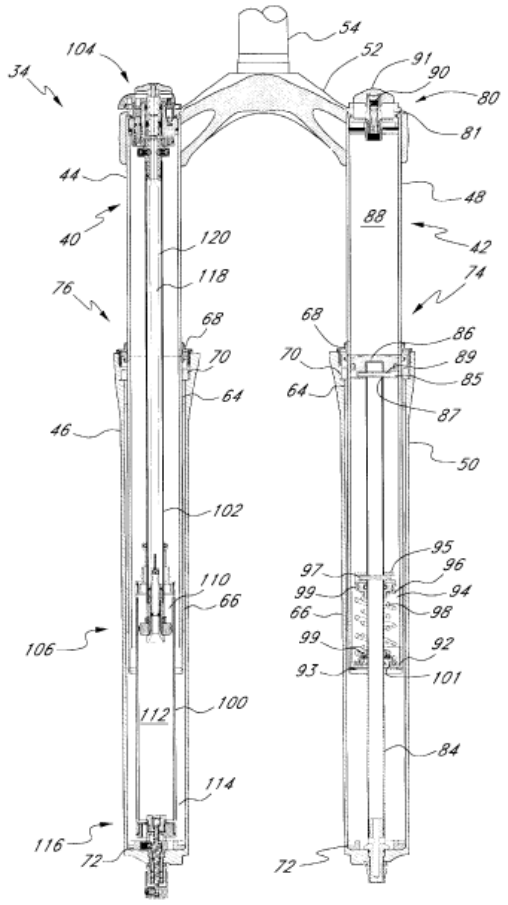

FIG. 3

Figure 3 of Becker depicts suspension fork 34 having upper tubes 44 and 48 capable of telescopic motion relative to respective lower tubes 46 and 50. *Id.* at 6:5–9. Lower tubes 46 and 50 include upper bushing 64 to inhibit wear and prevent direct contact of the tubes. *Id.* at 6:10–14. Lower tubes 46 and 50 support main seals 68 that "are in sealing engagement with" upper tubes 44 and 48 "to substantially prevent oil from exiting, or foreign material from entering." *Id.* at 6:29–33.

3. Summary of Bruckbauer (Ex. 1009)

Bruckbauer is titled "Bleed Valve System for Motorcycle Suspension." Ex. 1009, code (54). Bruckbauer "relates to a valve system for purging gases that become trapped within the fork tubes or suspension of a motorcycle's fork." *Id.* at 1:9–12. Bruckbauer explains that excessive trapped gas can stiffen a fork assembly. *Id.* at 1:33. To remedy this problem, Bruckbauer provides a bleed button or a pressure relief valve that includes a valve body with at least one O-ring that "can effectively keep out contaminants from the sealing mechanism of the pressure relief valve and the internal components of the dampeners or struts of the motorcycle." *Id.* at 2:14–34.

4. Summary of Danter (Ex. 1010)

Danter is titled "Mountain bike front suspension fork with disk brake means." Ex. 1010, code (54). Danter discloses that the leg portions of the front suspension fork member are "preferably cast from a suitable metal such as steel or aluminum alloy." *Id.* ¶ 11.

5. Summary of Huang (Ex. 1007)

Huang is titled "Inflation Valve." Ex. 1108, code (54). Huang's inflation valve "automatically releases surplus high-pressure air when an object is excessively inflated." *Id.* at 1:5–8. Figure 2 is reproduced below:

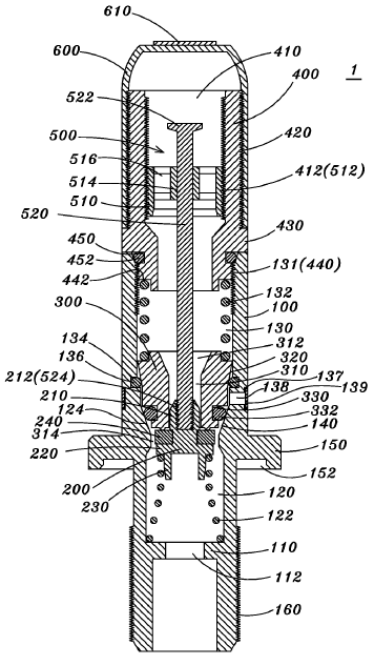

Fig. 2

Figure 2 is a vertical sectional view of an inflation valve with air inlet connector 400, first valve body 200, second valve body 300, and central pin assembly 500. Ex. 1007, 3:58–60, 4:18–21. Inflation valve may be mounted to the wheel rim of a tire so that user can pump the tire via inflation valve 1. *Id.* at 6:18–21, 6:32–33. Figure 3A is provided below:

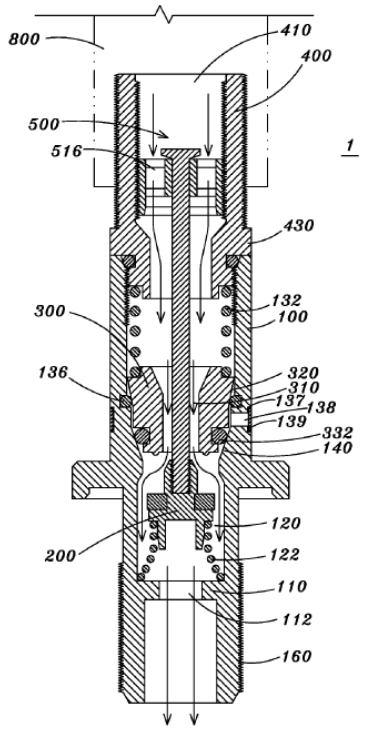

Fig. 3A

Figure 3A shows internal movement of the inflation valve of Figure 2. Ex. 1007, 3:61–62. Huang teaches that pumping device 800 contacts air inlet connector 400 and pushes down central pin 520. *Id.* at 6:34–37. When this happens, high pressure air is allowed to pass through air inlet 410, through air vents 516, through hole 310 to second valve body 300, and out central opening 112 into the tire. *Id.* at 6:37–47.

E. Asserted Anticipation By Kojima

Petitioner asserts that claims 1–3 and 5 are anticipated under 35 U.S.C. § 102(b) by Kojima. Pet. 17–35. Patent Owner opposes. Prelim. Resp. 20–33. Having considered the arguments and evidence before us, we conclude that Petitioner has not demonstrated a reasonable likelihood of prevailing on this challenge.

1. Independent Claim 1

Claim 1 is generally directed to a lower fork and air bleed assembly combination that includes a fluid passage and a manually operable valve wherein:

> said fluid passage and said manually operable valve are located at a distance from an oil bath lubrication within said lower fork, such that when said manually operable valve is in said second position, most, if not all of said oil bath lubrication remains within said lower fork and such that when trapped air pressure inside said lower fork, that is higher than a local ambient air pressure outside of said suspension fork or shock absorber, is relieved most, of said oil bath lubrication that is within said lower fork remains within said lower fork.

Ex. 1001, 4:53–5:13 (limitation [1g] per bracketed designations added by Petitioner (*see* Pet. vii–viii)).

For this limitation, Petitioner provides an annotated version of Kojima's Figure 9 on page 27 of the Petition, which is provided below:

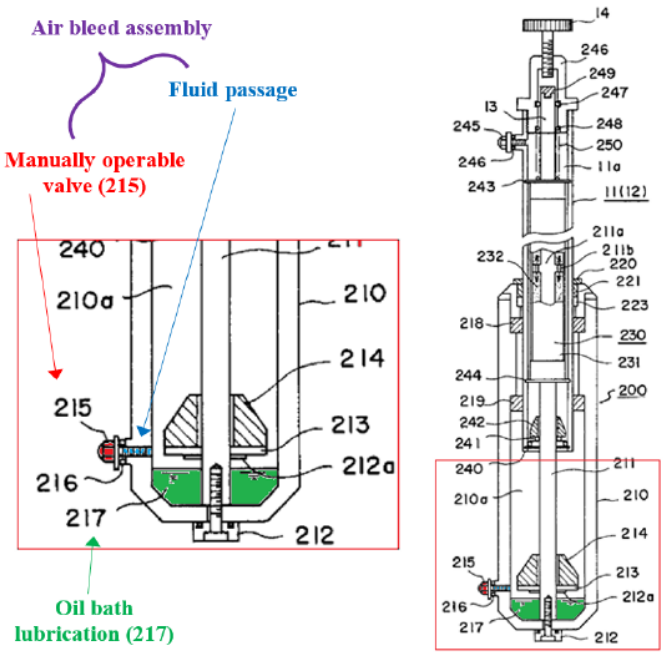

Petitioner's annotated versions of Kojima's Figure 9 show a cross-sectional view of a front suspension for a bike, and an enlarged section of Figure 9. Pet. 31; Ex. 1005, 25. In the annotations, Petitioner identifies "Air bleed assembly" in purple, "Fluid passage" in blue, "Manually operable valve (215)" in red, and "Oil bath lubrication (217)" in green. Pet. 31.

With reference to the annotated versions of Figure 9, Petitioner contends that Kojima's fluid passage and manually operable valve (i.e., air valve 215) are located at a distance from an oil bath lubrication 217 (green arrow) within lower fork 210. Pet. 30. Petitioner argues that

> [t]his positioning of *Kojima's* valve 215 results in a configuration wherein when the manually operable valve (defined in Claim element 1[f]) is in the second position (open position), most if not all of the oil bath lubrication 217 remains within the lower fork 210 because the air valve 215 is above the top of the illustrated oil bath 217. *The air valve 215 can be closed were oil to begin leaking.*

Pet. 30 (emphasis added). Petitioner adds that

> [a]ny air within lower fork 210 will be equalized with ambient pressure when air valve 215 is opened for a sufficient duration, while the oil 217 will remain in the oil bath lubrication space 210a within the lower fork 210. *Kojima's* Figure 9 clearly illustrates that the top surface of the oil bath 217 is well below the fluid passage of the air valve 215 screw within the bottom case 210.

Id.

Turning to Kojima, we note that air valve screw 215 is screwed into the lower side wall of bottom case 210 and that chamber 210a is formed by bottom case 210. Ex. 1005 ¶ 78. Kojima teaches that "air valve 215 is screwed into the lower side wall of the bottom case 210 via an O-ring 216 serving as an air seal." *Id.* ¶ 77. Kojima further discloses that "[t]he bottom portion inside the bottom case 210 forms an oil bath, and lubricating oil 217

is enclosed in this portion . . . to improve the airtightness of the air chamber 210a." *Id.* For the embodiment shown in Figure 9, Kojima teaches that the "initial operating smoothness and sensitivity during extension . . . are improved by pressurizing the air chamber 210a (at, for example, an air pressure of 50 psi)." *Id.* ¶ 78.

From this disclosure, we understand Kojima teaches expressly that chamber 210a is positively pressurized, rather than de-pressurized to ambient pressure. As such, the level of oil shown in Figure 9, which is positioned under the location of air valve 215, also reflects a positive pressure in chamber 210a. *See* Ex. 1005 ¶ 78. Petitioner's expert, Dr. Eric Wang, testified to the same at the Preliminary Injunction Hearing in the parallel district court proceeding. The cross-examination exchange between Patent Owner's litigation counsel and Dr. Wang is provided below:

> Q So air chamber 210a, to which -- with which the air valve 215 communicates is -- has a positive air pressure, of example 50 PSI, correct?
>
> A Yes. Well according to this -- according to what's written here for example, pressure 50 PSI; that's one example.
>
> Q So at least in this embodiment of figure nine, Kojima teaches that the chamber 210a has a positive air pressure of example 50 PSI, right?
>
> A That's what it says here, yes.

Ex. 2005, 191:9–17.

Given that Kojima's Figure 9 reflects a positive pressure scenario, it is unclear why a POSITA would understand, as Petitioner proposes, that Kojima teaches the oil level in chamber 210a will remain below the position of air valve 215 at ambient pressure or when the positive pressure inside chamber 210a is equalized to ambient pressure. *See* Pet. 30 ("*Kojima's*

Figure 9 clearly illustrates that the top surface of the oil bath 217 is well below the fluid passage of the air valve 215 screw within the bottom case 210.”). Moreover, Petitioner concedes that when air valve 215 is opened, oil will leak from the opening, and the amount of oil leaked is controlled by closing the air valve 215. *Id.* at 30 (“The air valve 215 can be closed were oil to begin leaking.”).

Claim 1 requires that the fluid passage and manually operable valve “*are located at a distance* from an oil bath lubrication within said lower fork, *such that when said manually operable valve is in said second position, most, if not all of said oil bath lubrication remains within said lower fork[.]*” Ex. 1001, 5:2–7 (emphases added). By Petitioner’s own concession, the distance of air valve 215 from an oil bath lubrication is not sufficient to keep most, if not all of the oil bath within the lower fork because, even at that distance, the air valve 215 must be closed to stop the oil leak. In short, it is the closing of the air valve 215 rather than the distance of the air valve 215 from the oil bath that keeps the oil bath in the lower fork.

For these reasons, we determine that Petitioner has not demonstrated a reasonable likelihood of prevailing on its assertion that Kojima anticipates claim 1 of the ’331 patent.

2. Dependent Claims 2, 3, and 5

Petitioner argues Kojima discloses the features of each of dependent claims 2, 3, and 5 (which depend from independent claim 1). Pet. 31–35.

As discussed above, we determine that Petitioner has not demonstrated a reasonable likelihood of prevailing on this challenge against claim 1. Claims 2, 3 and 5 depend from claim 1. For the same reasons discussed, we determine that Petitioner has not demonstrated a reasonable

likelihood that it would prevail in showing Kojima anticipates dependent claims 2, 3, and 5.

F. Asserted Obviousness Based on Becker and Bruckbauer

Petitioner asserts that claims 1–8 would have been obvious under 35 U.S.C. § 103 based on Becker and Bruckbauer. Pet. 35–68. Patent Owner opposes. Prelim. Resp. 33–41. Having considered the arguments and evidence before us, we conclude that Petitioner has not demonstrated a reasonable likelihood of prevailing on this ground.

1. Independent Claim 1

For its discussion of this ground, Petitioner provides an annotated version of Becker's Figure 3 on page 50 of the Petition, which is provided below:

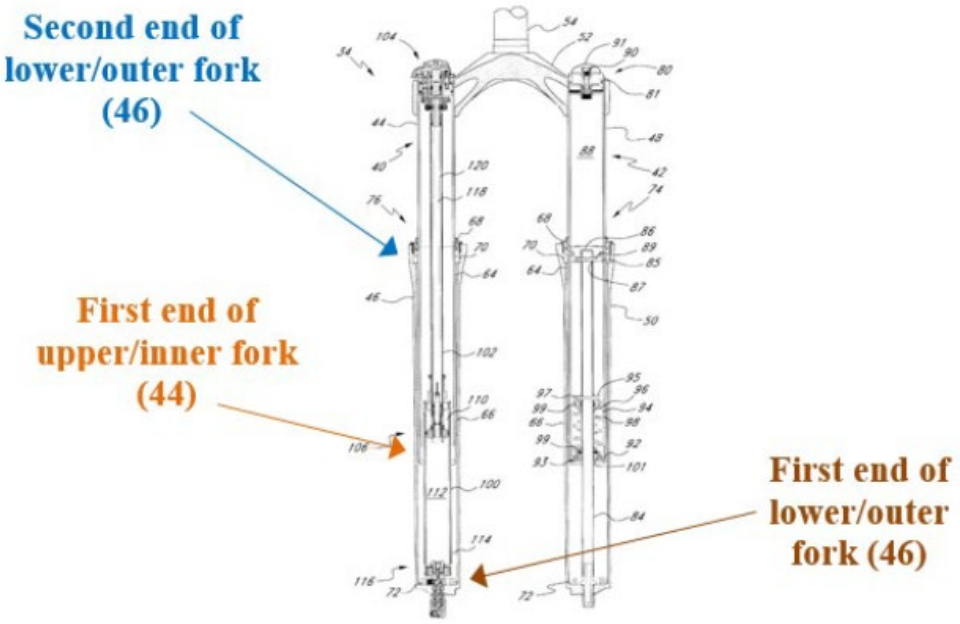

FIG. 3

Petitioner's annotated version of Becker's Figure 3 shows a cross-section of a suspension fork for a bicycle with Petitioner's annotations identifying "Second end of lower/outer fork (46)" in blue, "First end of upper/inner fork

(44)" in orange, and "First end of lower/outer fork (46)" in brown. *See* Ex. 1008, 4:54–56; Pet. 50. Petitioner contends that Becker's suspension fork 34 includes main seal 68; upper bushing 64; upper (inner) tube 44; lower (outer) tube 46; and oil. Pet. 47–48 (citing Ex. 1002 ¶ 63; Ex. 1003 ¶ 59; Ex. 1001, 1:60–67). Petitioner adds that Becker's damper assembly 76 is formed within outer tube 46 shown in Figure 3. *Id.*

Petitioner further provides an annotated version of Figure 3 on page 43 of the Petition (reproduced below):

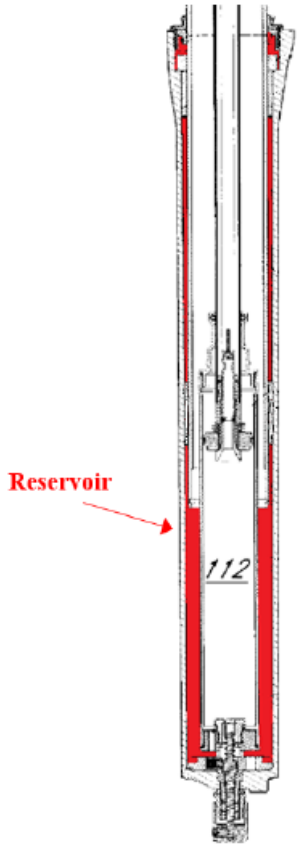

Petitioner's annotated version of Figure 3 shows reservoir 114 marked in red within the lower fork containing damper assembly 76. Pet. 43. Petitioner contends that "reservoir 114 is continuous, as oil and gas are able to move

past and around *Becker's* bushings 64, 66." *Id.* (citing Ex. 1002 ¶ 81; Ex. 1003 ¶ 77).

For the air bleed assembly, Petitioner contends that Bruckbauer discloses "a valve system for purging gases that become trapped within the fork tubes or suspension of a motorcycle's fork." Pet. 38 (quoting from Ex. 1009, 1:10–12). Petitioner asserts that Bruckbauer provides a bleed button or pressure relief valve at valve cap 36. *Id.* at 39, 54–55.

We observe, as Patent Owner points out, that neither Becker nor Bruckbauer teaches an air bleed assembly disposed in the lower fork. Prelim. Resp. 33–34 ("*Bruckbauer discloses a pressure relief valve 10 in the cap of a dampener 12 (not in a lower/outer fork leg as misrepresented by Petitioner*).") (citing Ex. 1009, 3:33–35, 4:21–23, Fig. 1.; *see* Ex. 1008). Rather, Becker does not disclose an air bleed assembly and Bruckbauer's pressure relief valve is located at valve cap 36, which is not in a lower fork. Petitioner's expert, Dr. Wang, agrees with this reading of the references. Ex. 2005, 192:15–193:4.

To address these missing limitations, Petitioner contends that

> [a] POSITA would have been motivated to add *Bruckbauer's* pressure relief system to a portion of *Becker's* right outer tube **46** *at a point in contact with Becker's reservoir **114**, in order to allow the pressure of any gas trapped within the reservoir **114** to equalize with the pressure of ambient air around the suspension fork **34**. See* Ex. 1009, 4:21–28. *Bruckbauer* explains that such equalization can "restore the [damper's] design characteristics" and unstiffen the suspension fork **34**. Ex. 1009, 4:27–28; 1:33–37. These benefits would have motivated a POSITA to make the simple combination. Ex. 1002, ¶82; Ex. 1003, ¶78.

Pet. 43–44 (emphases added). Petitioner adds that a "POSITA would have been motivated to try different locations for placing *Bruckbauer's* pressure

relief valve **10** along the extent of *Becker's* reservoir **114**." *Id.* at 44. Petitioner contends that "it would have been obvious to try different locations for placement of *Bruckbauer's* pressure relief valve **10** along the length of *Becker's* outer tube **46**, as there are only a finite number of positions along the length to try." *Id.* at 45.

Petitioner's arguments are unpersuasive. Even if we assume that a POSITA would have combined Bruckbauer's valve with Becker's lower fork to release air pressure, claim 1 requires that

> [the] fluid passage and said manually operable valve *are located at a distance from an oil bath lubrication within said lower fork, such that when said manually operable valve is in said second position, most, if not all of said oil bath lubrication remains within said lower fork* and such that when trapped air pressure inside said lower fork, that is higher than a local ambient air pressure outside of said suspension fork or shock absorber, is relieved most, of *said oil bath lubrication that is within said lower fork remains within said lower fork*.

Ex. 1001, 4:53–5:13 (limitation [1g] per bracketed designations added by Petitioner (*see* Pet. vii–viii)) (emphases added). Here, Petitioner contends that Becker's reservoir 114 "is continuous, as oil and gas are able to move past and around *Becker's* bushings 64, 66." Pet. 43 (citing Ex. 1002 ¶ 81; Ex. 1003 ¶ 77); *see* Pet. 51 ("This oil bath within the damper is also 'able to move throughout the reservoir 114 and, advantageously, provides lubrication for the bushings 64, 66 and various seals within the damper assembly 76.'") (discussing Becker with respect to limitation [1b]); Ex. 1008, 14:2–6. As such, we understand Petitioner's position to be that the oil in Becker is within lower tube 46 and also moves throughout reservoir 114. *Id.* at 51. That being the case, the addition of Bruckbauer's valve to "different locations" on Becker's lower fork, along the extent of reservoir 114, would

essentially place Bruckbauer's valve where oil is also located because the oil moves unrestricted in reservoir 114. It is, thus, unclear how the asserted combination teaches or suggests a fluid passage and manually operable valve that "are located at a distance from an oil bath lubrication within said lower fork, such that when said manually operable valve is in said second position, most, if not all of said oil bath lubrication remains within said lower fork[.]" Ex. 1001, 5:2–8. By Petitioner's own assertions, the oil travels unrestricted throughout reservoir 114. Petitioner has not identified where there would be a distance at which the fluid passage and valve can be placed on lower fork 46, along reservoir 114, that prevents oil leakage if the oil is present. We decline to speculate which of the "different locations" this would be.

Moreover, we observe that Petitioner asserts that

> [t]his positioning of *Bruckbauer's* pressure relief valve 10 results in a configuration wherein when the manually operable valve 54, 36, 14, 70 is in the second (open) position, most, if not all of the oil bath lubrication remains within *Becker's* lower (outer) fork 46 because *Bruckbauer's* valve 54, 36, 14, 70 and related passage *are located sufficiently high on Becker's lower fork 46 and can be closed were oil to begin leaking.*

Pet. 59 (emphasis added). Again, Petitioner does not explain sufficiently where or how a "sufficiently high" location would teach or suggest this limitation, especially where Petitioner also argues that the oil flows into and throughout reservoir 114. Instead, Petitioner relies on the closing of the valve to stop the leaking. The valve is closed to keep most of the oil in the lower fork. *Id.*

Moreover, we are not persuaded by Petitioner that orientation of the lower fork improves its arguments. Petitioner contends that "the fork may

be oriented such that any air within the reservoir 114 is easily vented from the pressure relief valve 10." Pet. 46. Petitioner argues that "for a pressure relief valve 10 (*Bruckbauer*) placed along the reservoir 114 (*Becker*), the suspension fork may need to be oriented so that gravity carries the oil away from the vent hole of the pressure relief valve 10." *Id.* However, Petitioner's argument requires the tilting or orientation of the lower fork to keep oil within the lower fork rather than a distance between the fluid passage and manually operable valve.

For these reasons, Petitioner has not demonstrated that it is reasonably likely to show that claim 1 would have been obvious over Becker and Bruckbauer.

2. Dependent Claims 2–8

Claims 2–8 depend from claim 1. We determined Petitioner has not demonstrated a reasonable likelihood that it would prevail in showing combination of Becker and Bruckbauer renders obvious independent claim 1. *See supra* Section III.F.1.

Petitioner's arguments for dependent claims 2–8 do not remedy the deficiencies discussed above.

For the same reasons discussed above, Petitioner has not demonstrated that it is reasonably likely to show that claims 2–8 would have been obvious over Becker and Bruckbauer.

G. Asserted Obviousness Based on Becker, Bruckbauer, and Danter

Petitioner asserts that claims 5 and 6 would have been obvious under 35 U.S.C. § 103 based on Becker, Bruckbauer, and Danter. Pet. 68–70. Petitioner relies on Danter's disclosure of die-cast processes for dependent claims 5 and 6. Pet. 69–70.

Petitioner's arguments for dependent claims 5 and 6 do not remedy the deficiencies discussed above with respect to independent claim 1.

For the same reasons discussed above, Petitioner has not demonstrated that it is reasonably likely to show that claims 5 and 6 would have been obvious over Becker, Bruckbauer, and Danter.

H. Asserted Obviousness Based on Kojima, Bruckbauer, and Danter

Petitioner asserts that claims 1–8 would have been obvious under 35 U.S.C. § 103 based on Kojima, Bruckbauer, and Danter.[6] Pet. 70–89. Patent Owner opposes. Prelim. Resp. 20–33. Having considered the arguments and evidence before us, we conclude that Petitioner has not demonstrated a reasonable likelihood of prevailing on these assertions.

In this combination, Petitioner relies on Kojima's Figure 9 as teaching that the arrangement of lubricating oil bath 217 below air valve 215 "allows for the air within *Kojima's* bottom case 210 to pass through the air valve 215 without materially disturbing the lubricating oil bath 217." Pet. 70 (citing Ex. 1002 ¶ 57; Ex. 1003 ¶ 53). Petitioner relies on Bruckbauer's teaching of a pressure relief valve for substitution of Kojima's air valve 215. *See* Pet. 73 ("When substituted into *Kojima's* threaded hole, *Bruckbauer's* pressure relief valve 10 allows the user to equalize any pressure built up between the lower fork 210 and the upper fork 11 during assembly or maintenance by merely pressing *Bruckbauer's* cap 36.") (citing Ex. 1002 ¶ 75; Ex. 1003, ¶ 71).

[6] For this challenge, the Petitioner does not explain what disclosure in Danter is relied upon for this combination. *See* Pet. 74–80. We decline to speculate as to Petitioner's positions.

As explained above, we are not persuaded that Kojima teaches that independent claim 1's fluid passage and manually operable valve "*are located at a distance* from an oil bath lubrication within said lower fork, *such that when said manually operable valve is in said second position, most, if not all of said oil bath lubrication remains within said lower fork[.]*" Ex. 1001, 5:2–7 (emphases added). *See supra* Section III.E. Because Bruckbauer's teaching of valves does not remedy the deficiencies in Kojima, we determine Petitioner has not demonstrated a reasonable likelihood that it would prevail in showing the combination of Kojima and Bruckbauer renders obvious claims 1–8.

Additionally, Petitioner relies on Danter in the heading and Table of Contents. Pet. 70–89. As Patent Owner discerns, "the detailed description of Ground IV does not include any discussion of Danter." Prelim. Resp. 20 n.3 (citing Pet. 70–89). Nonetheless, we also observe that Danter's die-cast process (*see* Pet. 69) does not remedy the deficiencies in Kojima. We determine Petitioner has not demonstrated a reasonable likelihood that it would prevail in showing the combination of Kojima, Bruckbauer, and Danter renders obvious dependent claims 1–8.

I. Asserted Obviousness Based on Kojima and Huang

Petitioner asserts that claims 3–8 would have been obvious under 35 U.S.C. § 103 based on Kojima and Huang. Pet. 89–102. Claims 3–8 depend from independent claim 1. Ex. 1001, 5:14–6:29.

In this combination, Petitioner relies on Kojima's Figure 9 as teaching that the arrangement of lubricating oil bath 217 below air valve 215 "allows for the air within *Kojima's* bottom case 210 to pass through the air valve 215 without materially disturbing the lubricating oil bath 217." Pet. 70 (citing

Ex. 1002 ¶ 57; Ex. 1003 ¶ 53). Petitioner further contends that a POSITA would have substituted Huang's valve 1 for Kojima's air valve 215 to, among other things, "allow for more convenient air insertion into *Kojima*, when needed." Pet. 91 (citing Ex. 1002 ¶ 91; Ex. 1003 ¶ 87).

As explained above, we are not persuaded that Kojima teaches that independent claim 1's fluid passage and manually operable valve "*are located at a distance* from an oil bath lubrication within said lower fork, *such that when said manually operable valve is in said second position, most, if not all of said oil bath lubrication remains within said lower fork[.]*" Ex. 1001, 5:2–7 (emphases added). *See supra* Section III.E. Because Huang's teaching of valves does not remedy the deficiencies in Kojima, we determine Petitioner has not demonstrated a reasonable likelihood that it would prevail in showing combination of Kojima and Huang renders obvious claims 3–8, which depend from claim 1.

IV. CONCLUSION

Based on the current record, and for the reasons explained above, we find Petitioner has not demonstrated a reasonable likelihood that it would prevail with respect to at least one claim challenged in the Petition. Thus, decline to institute *inter partes* review.[7]

[7] Patent Owner also argues that we should deny review under § 314(a). *See* Prelim. Resp. 41–51. We do not address this argument because we deny the Petition for reasons explained above.

IV. ORDER

Upon consideration of the record before us, it is:

ORDERED that the Petition is denied, and no trial is instituted.

FOR PETITIONER:

Michael J. Hickey
Michael H. Durbin
Richard B. Walsh, Jr.
LEWIS RICE LLC
mhickey@lewisrice.com
mdurbin@lewisrice.com
rwalsh@lewisrice.com

FOR PATENT OWNER:

Joshua L. Goldberg
Arpita Bhattacharyya
FINNEGAN, HENDERSON, FARABOW, GARRETT, & DUNNER LLP
joshua.goldberg@finnegan.com
arpita.bhattacharyya@finnegan.com