Trials@uspto.gov
571-272-7822

Paper No. 14
Date: February 21, 2024

UNITED STATES PATENT AND TRADEMARK OFFICE

BEFORE THE PATENT TRIAL AND APPEAL BOARD

SRAM, LLC,
Petitioner,

v.

FOX FACTORY, INC.,
Patent Owner.

IPR2023-01302
Patent 9,739,331 B2

Before MEREDITH C. PETRAVICK, JEREMY M. PLENZLER, and FRANCES L. IPPOLITO, *Administrative Patent Judges.*

IPPOLITO, *Administrative Patent Judge*.

DECISION
Denying Institution of *Inter Partes* Review
35 U.S.C. § 314(a)

I. INTRODUCTION

SRAM, LLC filed a Petition (Paper 3, "Pet.") requesting an *inter partes* review of claims 1–8 of U.S. Patent No. 9,739,331 B2 (Ex. 1101, "the '331 patent"). FOX Factory, Inc. ("Patent Owner") filed a Preliminary Response to the Petition (Paper 9, "Prelim. Resp.").

Under 35 U.S.C. § 314(a), an *inter partes* review may not be instituted unless the information presented in the Petition and any response thereto shows "there is a reasonable likelihood that the petitioner would prevail with respect to at least 1 of the claims challenged in the petition."

Upon consideration of the Petition, Preliminary Response, and the evidence of record, we determine that the information presented in the Petition does not establish a reasonable likelihood that Petitioner would prevail in showing the unpatentability of at least one of the challenged claims.

Accordingly, we do not institute *inter partes* review of claims 1–8 of the '331 patent based on the grounds raised in the Petition.

II. BACKGROUND

A. Related Matters

The parties identify the following United States District Court actions as involving the '331 patent: *Fox Factory, Inc. v. SRAM, LLC*, No. 1:23-cv-00313-RM-KLM (D. Colo.) and *FOX Factory, Inc. v. SRAM, LLC*, No. 2:22-cv-04805-DOC-JC (C.D. Cal.) (transferred to D. Colo.). Pet. 127; Paper 5, 1.

In addition to the instant Petition, Petitioner filed a second petition challenging the '331 patent in IPR2023-01301. Paper 5, 1; *see also* Paper 2 ("Petitioner's Explanation of Two Petitions").

B. Real Parties in Interest

Petitioner identifies itself as the real party in interest. Pet. 127. Patent Owner identifies itself and FOX Factory Holding Corp. as the real parties in interest. Paper 5, 1.

C. The '331 patent

The '331 patent, titled "Method and Apparatus for an Adjustable Damper," relates to components "useful for equalizing ambient pressure within [a] vehicle suspension." Ex. 1101, code (54), 1:26–30. The '331 patent explains that vehicle suspension systems typically include a damping piston with vents in a fluid-filled cylinder that has oil. *Id.* at 1:32–46. Such vehicle suspension systems can also include air pressurized and sealed inside telescoping fork legs in which at high elevations, pressure and load added to the seal and "ultimately creates significantly higher axial friction in the telescoping suspension fork." *Id.* at 1:47–54. The '331 patent purports to provide "improved techniques for lowering equalizing ambient pressure within a vehicle suspension." *Id.* at 1:55–57.

Figure 1 of the '331 patent, reproduced below, shows a front bicycle fork. *Id.* at 1:61–62.

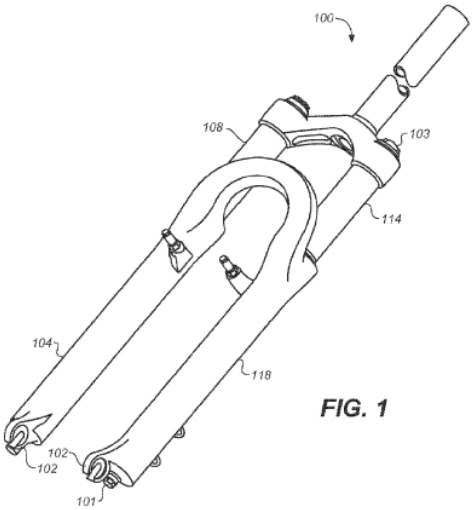

FIG. 1

Figure 1 of the ’331 patent depicts front fork 100 having a damper for suspension that includes lower fork tube 118 connected to upper fork tube 114, and a spring (not shown) for rebounding within lower fork tube 104 that is connected to upper fork tube 108. *Id.* at 2:20–24, 3:5–13. Movement of upper fork tube 114 causes a piston to move axially within a damper body and fluid is displaced in a compression chamber, some of which flows through an orifice into a reservoir. *Id.* at 3:23–31. A button (150 shown in Figure 3), “positioned on a die case feature of the lower leg,” is provided to allow a rider to push and let pressure in the lower leg equalize to ambient pressure at high elevation and “restore a lower-friction fork.” *Id.* at 3:65–4:1, 4:13–16.

Figure 4 of the ’331 patent, reproduced below, shows a positioning of an air bleed assembly relative to an oil bath lubrication in a lower leg tube. *Id.* at 2:1–3.

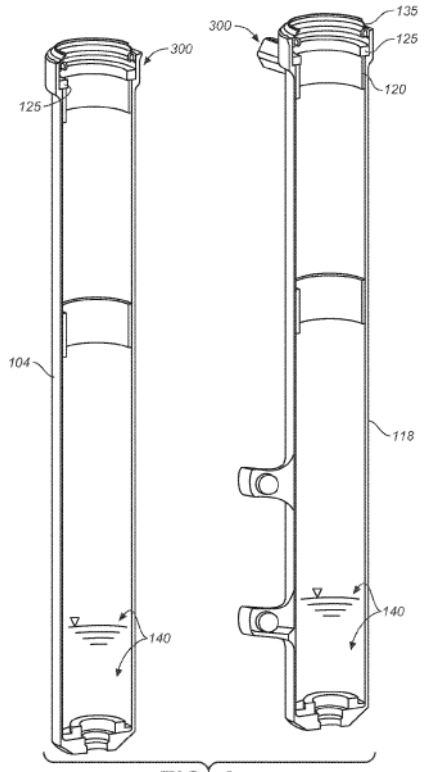

FIG. 4

Figure 4 of the '331 patent shows a cross-sectional view of lower fork tube 118 on the right side and lower fork tube 104 on the left side of front fork 100 of Figure 1, along with the positioning of an air bleed assembly relative to an oil bath. *Id.* at 4:28–30. Lower fork tube 118 includes oil bath 140 and lower leg seal 135 that seals the fork "to prevent the lower leg oil bath from leaking out of the fork." *Id.* at 4:1–6. Lower fork tube 118 also includes air bleed assembly 300 that "is located right below the lower leg seal 135 so that when excessive air pressure in the fork is relieved at high elevation, the oil bath 140 [is] typically leveled" and does not spray or leak out. *Id.* at 4:3–7. Air bleed assembly 300 along with a vent hole (154 shown in Figure 2) are located between the seal and upper brushing 120. *Id.* at 4:17–19.

D. The Challenged Claims

Petitioner challenges claims 1–8 of the '331 patent. Pet. 1. Of the challenged claims, claim 1 is independent. Claim 1 is reproduced below:

> [1pre] A lower fork and air bleed assembly combination comprising:
>
> [1a] a lower fork, said lower fork configured to have a first end coupled to a vehicle wheel, and a second end configured to be telescopically engaged with a first end of an upper fork, said lower fork further comprising:
>
> [1b] a lower leg seal located at an outermost edge of said second end of said lower fork tube, said lower leg seal configured for sealing closed a gap disposed between said upper fork tube and said lower fork tube when said lower fork is telescopically engaged with said first end of said upper fork, thereby preventing an oil bath lubrication occupying an area within said lower fork tube at a first end of said lower fork tube from leaking from said lower fork; and
>
> [1c] an upper bushing attached to and positioned adjacent to said lower leg seal; and
>
> [1d] an air bleed assembly disposed on said lower fork tube, said air bleed assembly configured for equalizing ambient pressure within said lower fork, said air bleed assembly comprising:
>
> [1e] a fluid passage disposed between an interior of said lower fork and an exterior of said lower fork; and
>
> [1f] a manually operable valve located in said lower fork and coupled to said fluid passage, said manually operable valve having a first position substantially closing said fluid passage and a second position allowing a fluid to flow between said interior and said exterior, said manually operable valve disposed between said lower leg seal and said first end of said lower fork, and
>
> [1g] wherein said fluid passage and said manually operable valve are located at a distance from an oil bath lubrication within said lower fork, such that when said manually

> operable valve is in said second position, most, if not all of said oil bath lubrication remains within said lower fork and such that when trapped air pressure inside said lower fork, that is higher than a local ambient air pressure outside of said suspension fork or shock absorber, is relieved most, of said oil bath lubrication that is within said lower fork remains within said lower fork.

Ex. 1101, 4:39–5:13 (bracketed designations added by Petitioner (*see* Pet. vii–viii, 17–27, 38–44, 55–63, 67–70, 87–103, 113–119)).

E. Asserted Grounds of Unpatentability

Petitioner asserts the following grounds of unpatentability:

Claim(s) Challenged	35 U.S.C. §	Reference(s)/Basis
1–3, 5	102	Kashima[1]
1–8	103	Kashima, Bruckbauer,[2] Danter[3]
1, 2	102	Hoose[4]
1–8	103	Hoose, Huang[5], Danter
1–3, 5	102	Ceriani[6]
1–8	103	Ceriani, Bruckbauer, Danter

Pet. 15–126. In addition to the references listed above, Petitioner relies on the Declarations of Eric Wang, Ph.D. (Ex. 1102), Kevin Wesling (Ex. 1103), and Michael J. Hickey (Ex. 1117).

[1] Certified translation of JP S52-156051 U, published May 21, 1976 and original Japanese language version (Ex. 1105, "Kashima").
[2] US 7,231,939 B1, issued June 19, 2007 (Ex. 1106, "Bruckbauer").
[3] EP 0979772 A2, published Feb. 16, 2000 (Ex. 1107, "Danter").
[4] US 6,371,263 B1, issued Apr. 16, 2002 (Ex. 1108, "Hoose").
[5] US 7,624,752 B2, issued Dec. 1, 2009 (Ex. 1109, "Huang").
[6] US 4,145,067, issued Mar. 20, 1979 (Ex. 1110, "Ceriani").

III. ANALYSIS

A. Principles of Law

Petitioner bears the burden of demonstrating a reasonable likelihood that it would prevail with respect to at least one challenged claim for a petition to be granted. 35 U.S.C. § 314(a). This burden of persuasion never shifts to Patent Owner. *See Dynamic Drinkware, LLC v. Nat'l Graphics, Inc.*, 800 F.3d 1375, 1378 (Fed. Cir. 2015) (discussing the burden of proof in *inter partes* review).

"A claim is anticipated only if each and every element as set forth in the claim is found, either expressly or inherently described, in a single prior art reference." *Verdegaal Bros. v. Union Oil Co. of California*, 814 F.2d 628, 631(Fed. Cir. 1987). The elements must be arranged as required by the claim, but this is not an *ipsissimis verbis* test, i.e., identity of terminology is not required. *In re Bond*, 910 F.2d 831 (Fed. Cir. 1990).

A patent claim is unpatentable for obviousness if the differences between the claimed subject matter and the prior art are such that the subject matter, as a whole, would have been obvious at the time the invention was made to a person having ordinary skill in the art to which said subject matter pertains. *KSR Int'l Co. v. Teleflex Inc.*, 550 U.S. 398, 406 (2007). In *Graham v. John Deere Co.*, 383 U.S. 1 (1966), the Supreme Court set out a framework for assessing obviousness that requires consideration of four factors: (1) the "level of ordinary skill in the pertinent art," (2) the "scope and content of the prior art," (3) the "differences between the prior art and the claims at issue," and (4) "secondary considerations" of nonobviousness such as "commercial success, long felt but unsolved needs, failure of others, etc." *Id.* at 17–18; *KSR*, 550 U.S. at 407.

"Whether an ordinarily skilled artisan would have been motivated to modify the teachings of a reference is a question of fact." *WBIP, LLC v. Kohler Co.*, 138 F.3d 1317, 1327 (Fed. Cir. 2016) (citations omitted). "[W]here a party argues a skilled artisan would have been motivated to combine references, it must show the artisan 'would have had a reasonable expectation of success from doing so.'" *Arctic Cat Inc. v. Bombardier Recreational Prods. Inc.*, 876 F.3d 1350, 1360–61 (Fed. Cir. 2017) (quoting *In re Cyclobenzaprine Hydrochloride Extended-Release Capsule Patent Litig.*, 676 F.3d 1063, 1068–69 (Fed. Cir. 2012)).

B. Level of Ordinary Skill in the Art

In determining the level of skill in the art, we consider the type of problems encountered in the art, the prior art solutions to those problems, the rapidity with which innovations are made, the sophistication of the technology, and the educational level of active workers in the field. *Custom Accessories, Inc. v. Jeffrey-Allan Indus. Inc.*, 807 F.2d 955, 962 (Fed. Cir. 1986); *Orthopedic Equip. Co. v. United States*, 702 F.2d 1005, 1011 (Fed. Cir. 1983).

Petitioner contends that a person of ordinary skill in the art "would have a degree in Mechanical Engineering and at least three years' experience in vehicle suspension technology, or a Master's degree in Mechanical Engineering with a concentration in design of vehicle suspension technology and/or shock absorbers." Pet. 2, n.1 (citing Ex. 1102 ¶ 33; Ex. 1103 ¶ 29). Patent Owner does not dispute Petitioner's proposed definition. *See generally*, Prelim. Resp.

For purposes of this Decision, we adopt the definition of the level of ordinary skill in the art proposed by Petitioner as reasonable and consistent

with the prior art. *See Okajima v. Bourdeau*, 261 F.3d 1350, 1355 (Fed. Cir. 2001) (the prior art may reflect an appropriate level of skill in the art).

C. Claim Construction

In an *inter partes* review proceeding, the Board interprets claim language using the same claim construction standard that would be used in a civil action under 35 U.S.C. § 282(b), as described in *Phillips v. AWH Corp.*, 415 F.3d 1303 (Fed. Cir. 2005) (en banc). *See* 37 C.F.R. § 42.100(b). Under that standard, we generally give claim terms their ordinary and customary meaning, as would be understood by a person of ordinary skill in the art at the time of the invention, in light of the language of the claims, the specification, and the prosecution history. *See Phillips*, 415 F.3d at 1313–14. Although extrinsic evidence, when available, may also be useful when construing claim terms under this standard, extrinsic evidence should be considered in the context of the intrinsic evidence. *See id.* at 1317–19.

Petitioner contends that claim construction is not necessary. Pet.7. Nonetheless, Petitioner contends that because of prosecution history disclaimer, the claim term "air bleed assembly" should be construed to be "located between the lower leg seal and the upper bushing." *Id.*

Patent Owner contends that this claim term should be accorded its plain and ordinary meaning. Prelim. Resp. 13. In particular, Petitioner argues that "[t]he claim language itself makes it clear that the 'air bleed assembly' is located on the lower fork between the lower leg seal and a resting level of the oil bath in the lower fork." *Id.* (citing Ex. 1101, 4:56–5:4).

We note that Petitioner acknowledges that "claim construction is not necessary because the claims of the '331 patent are invalid in view of the

prior art regardless of whether Fox's prosecution history disclaimer on the position of the "air bleed assembly" is included in the claim construction." Pet. 7.

Based on our review of the parties' arguments and evidence, no construction is necessary to resolve the parties' disputes. *Vivid Techs., Inc. v. Am. Sci. & Eng'g, Inc.*, 200 F.3d 795, 803 (Fed. Cir. 1999) ("[O]nly those terms need be construed that are in controversy, and only to the extent necessary to resolve the controversy.").

D. Overview of the Prior Art

1. Summary of Kashima (Ex. 1105)

Kashima is titled "Hydraulic Shock-Absorbing Front Fork." Ex. 1105, 7.

Figure 1 of Kashima is reproduced below.

Fig. 1

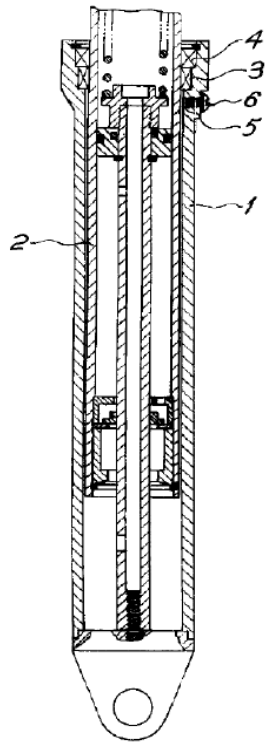

Figure 1 of Kashima is a partial cross-sectional view of a front fork with a breather. Ex. 1105, 9. More specifically, Figure 1 of Kashima depicts:

> [a] hydraulic shock-absorbing front fork for suspension having an inner tube (2) slidably inserted into the hollow space of an outer tube (1) via a bearing (3) in the upper end portion, the hydraulic shock-absorbing front fork characterized in that a threaded hole (5) is formed so as to pass through the upper portion of the outer tube (1) near the bearing (3), and a setscrew (6) having an oil seal (7) [(oil seal 7 is shown in Figure 2, rather than Figure 1) is detachably screwed into the threaded hole.

Id., "Utility Model Claims"[7]. Kashima explains that in the shock-absorbing front fork of a motorcycle, the outer tube is "oil sealed to prevent leakage of hydraulic fluid housed inside." *Id.* ¶ 1. During compression, the presence of air in the gap between the inner peripheral surface of the outer tube and the outer peripheral surface of the inner tube "leads to a loss of smoothness" in the suspension. *Id.* ¶ 2. Further, this leads to a clearance imbalance of the hydraulic fluid along the sliding surfaces, thereby causing "a lateral load to act on the inner tube, increasing friction on the sliding surfaces and causing wear and biting." *Id.* To remedy this problem, Kashima provides threaded hole 5 near bearing 3 along with "an air breather" via setscrew 6 with oil seal 7. *Id.* ¶ 3. When threaded hole 5 is opened, inner tube 2 is compressed along with leakage of hydraulic fluid from inside of outer tube 1 and a user "can confirm that any air present in the clearance has been exhausted." *Id.* ¶ 4.

2. Summary of Bruckbauer (Ex. 1106)

Bruckbauer is titled "Bleed Valve System for Motorcycle Suspension." Ex. 1106, code (54). Bruckbauer "relates to a valve system

[7] Header for un-numbered paragraph before paragraph 1 on page 8 of Exhibit 1105.

for purging gases that become trapped within the fork tubes or suspension of a motorcycle's fork." *Id.* at 1:9–12. Bruckbauer explains that excessive trapped gas can stiffen a fork assembly. *Id.* at 1:33. To remedy this problem, Bruckbauer provides a bleed button or a pressure relief valve that includes a valve body with at least one O-ring that "can effectively keep out contaminants from the sealing mechanism of the pressure relief valve and the internal components of the dampeners or struts of the motorcycle." *Id.* at 2:14–34.

3. Summary of Danter (Ex. 1107)

Danter is titled "Mountain bike front suspension fork with disk brake means." Ex. 1107, code (54). Danter discloses that the leg portions of the front suspension fork member "is preferably cast from a suitable metal such as steel or aluminum alloy." *Id.* ¶ 11.

4. Summary of Hoose (Ex. 1108)

Hoose is titled "Vehicle and Vehicle Suspension." Ex. 1108, code (54). Hoose "relates to a two-wheeled vehicle suspension having two shock absorbing systems independently operable between a two-wheeled vehicle's frame and wheel." *Id.* at 1:12–15.

Figure 9 of Hoose, reproduced below, is a cross-sectional view of a suspension. *Id.* at 2:61–63.

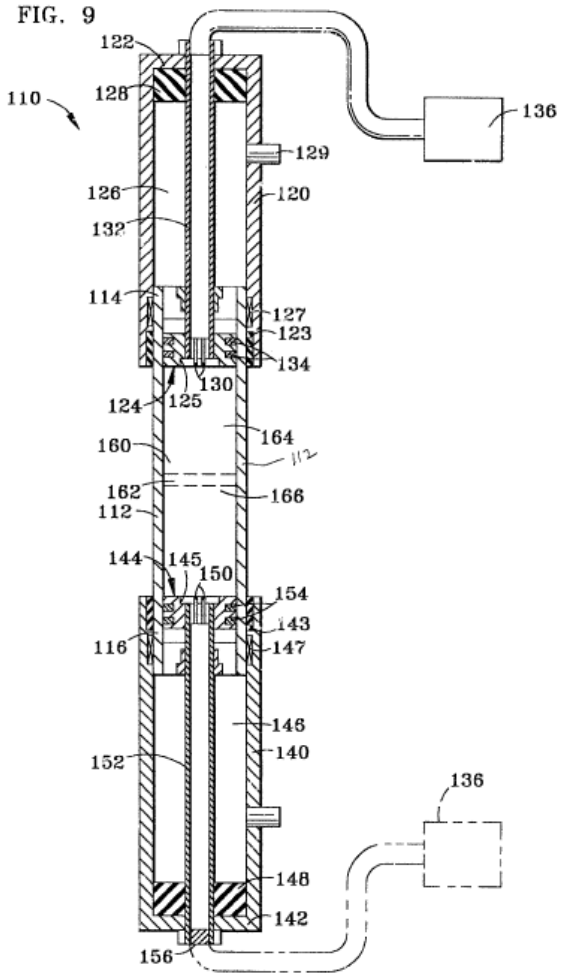

Figure 9 shows suspension 110 with shock tube 112 telescopically received in housing 120 at one end and telescopically received in housing 140 at the other end. *Id.* 5:63–6:2. Housing 140 includes seal 143 to seal shock tube 112 and bearing 147 "to aid slidability with shock tube 112" and "protect suspension 110 from debris." *Id.* at 6:6–10. Valve 129 (labeled for housing 120 but unlabeled for housing 140) is provided to pressurize a chamber within the housings using oil or air. *Id.* at 6:21–25, 7:2–4. Suspension 110 also includes piston 114 having stem portion 152 and positioned inside housing 140. *Id.* at 6:51–63. Chamber 160 in shock tube 112 is pressurized

via stem portion 132 or 152 which is fluidly coupled to pressurized fluid source 136. *Id.* at 6:60–62.

5. Summary of Huang (Ex. 1108)

Huang is titled "Inflation Valve." Ex. 1108, code (54). Huang's inflation valve "automatically releases surplus high-pressure air when an object is excessively inflated." *Id.* at 1:5–8. Figure 2 is reproduced below:

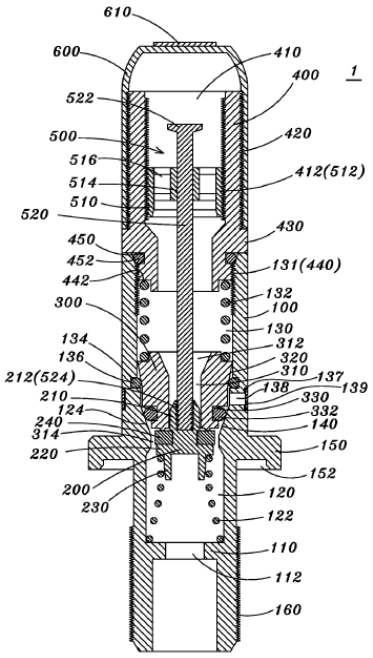

Fig. 2

Figure 2 is a vertical sectional view of an inflation valve with air inlet connector 400, first valve body 200, second valve body 300, and central pin assembly 500. Ex. 1007, 3:58–60, 4:18–21. Inflation valve may be mounted to the wheel rim of a tire so that user can pump the tire via inflation valve 1. *Id.* at 6:18–21, 6:32–33. Figure 3A is provided below:

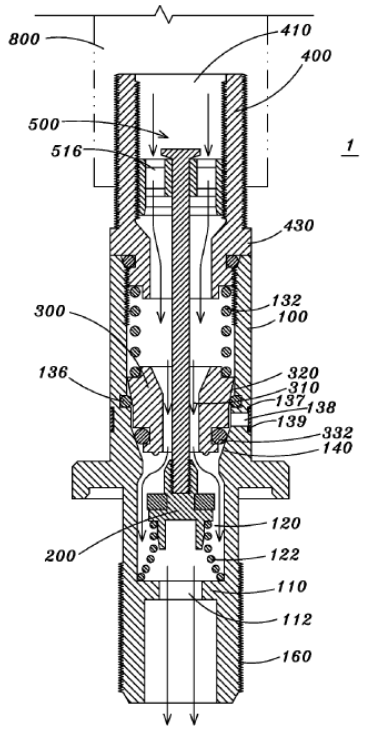

Fig. 3A

Figure 3A shows internal movement of the inflation valve of Figure 2. Ex. 1007, 3:61–62. Huang teaches that pumping device 800 contacts air inlet connector 400 and pushes down central pin 520. *Id.* at 6:34–37. When this happens, high pressure air is allowed to pass through air inlet 410, through air vents 516, through hole 310 to second valve body 300, and out central opening 112 into the tire. *Id.* at 6:37–47.

6. Summary of Ceriani (Ex. 1110)

Ceriani is titled "Suspension System for a Motor Vehicle." Ex. 1110, code (54). Ceriani explains that air can enter hydraulic fluid or oil resulting in "poor shock absorbing characteristics." *Id.* at 1:22–27. Ceriani purports to resolve this disadvantage. *Id.* at 1:30–46.

Figure 1 of Ceriani, reproduced below, is a front elevational schematic view of a motorcycle fork. *Id.* 1:51–53.

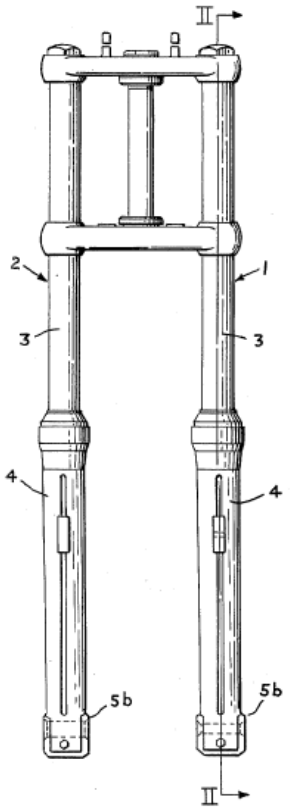

FIG. 1

Figure 1 depicts a suspension system having shock absorber 1 and 2, each having inner body 3 slidingly inserted into outer body 4. *Id.* 1:65–2:6. Outer body 4 is provided with annular gasket 6 along with ring 7 and sleeve 8 (shown in Figures 2 and 3) "for the seal therebetween." *Id.* at 2:7–10. Figure 4 of Ceriani, annotated by Petitioner and reproduced below, is an enlarged partial view of the lower portion of the outer body. *Id.* at 1:58–59.

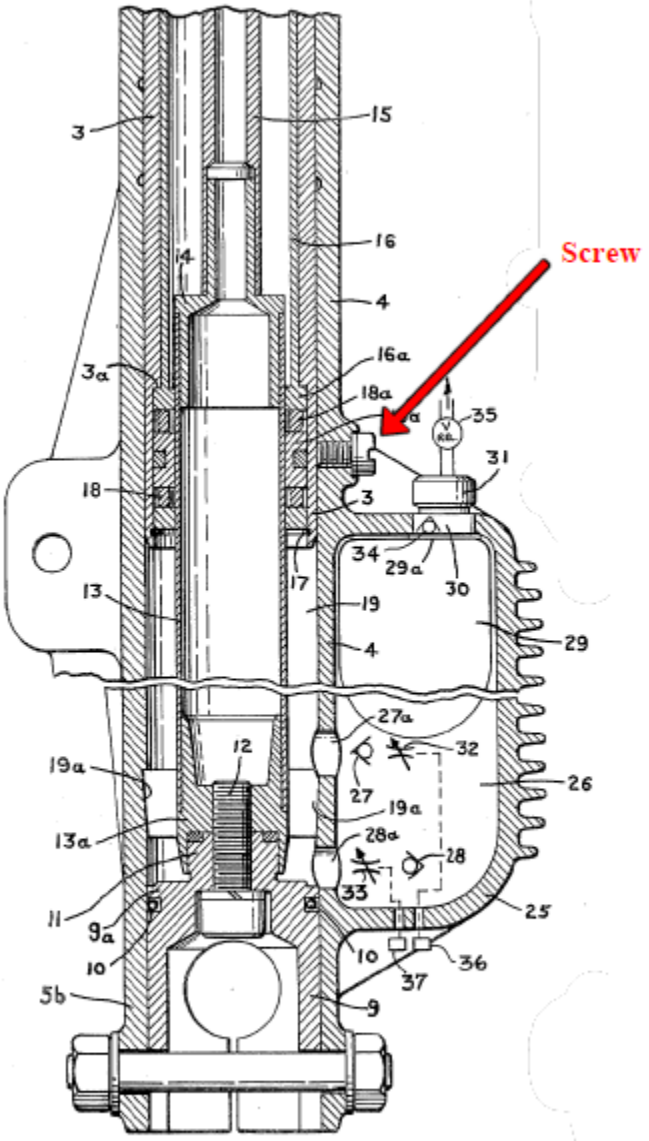

FIG. 4

Annotated Figure 4 shows piston 16a movable axially in piston chamber 19 of outer body 4 with a red arrow annotating a "Screw" going through outer body 4. *Id.* at 2:36–38. Outer body 4 also includes expansion chamber 26 which is in communication with piston chamber 19. *Id.* at 2:51–53. Within chamber 26 is pocket 29 that is filled with fluid, such as pressurized air. *Id.* at 3:3–5. Passage 30 connects the fluid to regulating valve 31. *Id.* at 3:9–13.

Passage 30 "may be equipped with a check valve 34 for charging the fluid." *Id.* at 3:63–66. Adjustable pressure relief valve 35 is used to "diverse predetermined values established by the user." *Id.* at 3:66–7:1. Piston chamber 19 and a portion of expansion chamber 26 is filled with hydraulic fluid such as oil. *Id.* at 3:13–17. When compressible fluid has reached a desired level in pocket 29, pressure relief valve will be blocked to prevent outflow of the compressible fluid. *Id.* at 7:3–7.

E. Asserted Anticipation By Kashima

Petitioner asserts that claims 1–3 and 5 are anticipated under 35 U.S.C. § 102(b) by Kashima. Pet. 15–31. Patent Owner opposes. Prelim. Resp. 20–26. Having considered the arguments and evidence before us, we conclude that Petitioner has not demonstrated a reasonable likelihood of prevailing on this challenge. We discuss independent claim 1 below.

1. Independent Claim 1

Claim 1 is generally directed to a lower fork and air bleed assembly combination that includes a fluid passage and a manually operable valve wherein:

> said fluid passage and said manually operable valve are located at a distance from an oil bath lubrication within said lower fork, such that when said manually operable valve is in said second position, most, if not all of said oil bath lubrication remains within said lower fork and such that when trapped air pressure inside said lower fork, that is higher than a local ambient air pressure outside of said suspension fork or shock absorber, is relieved most, of said oil bath lubrication that is within said lower fork remains within said lower fork.

Ex. 1101, 4:53–5:13 (limitation [1g] per bracketed designations added by Petitioner (*see* Pet. vii–viii)).

For this limitation, Petitioner provides an annotated version of Kashima's Figure 1 on page 26 of the Petition, which is provided below:

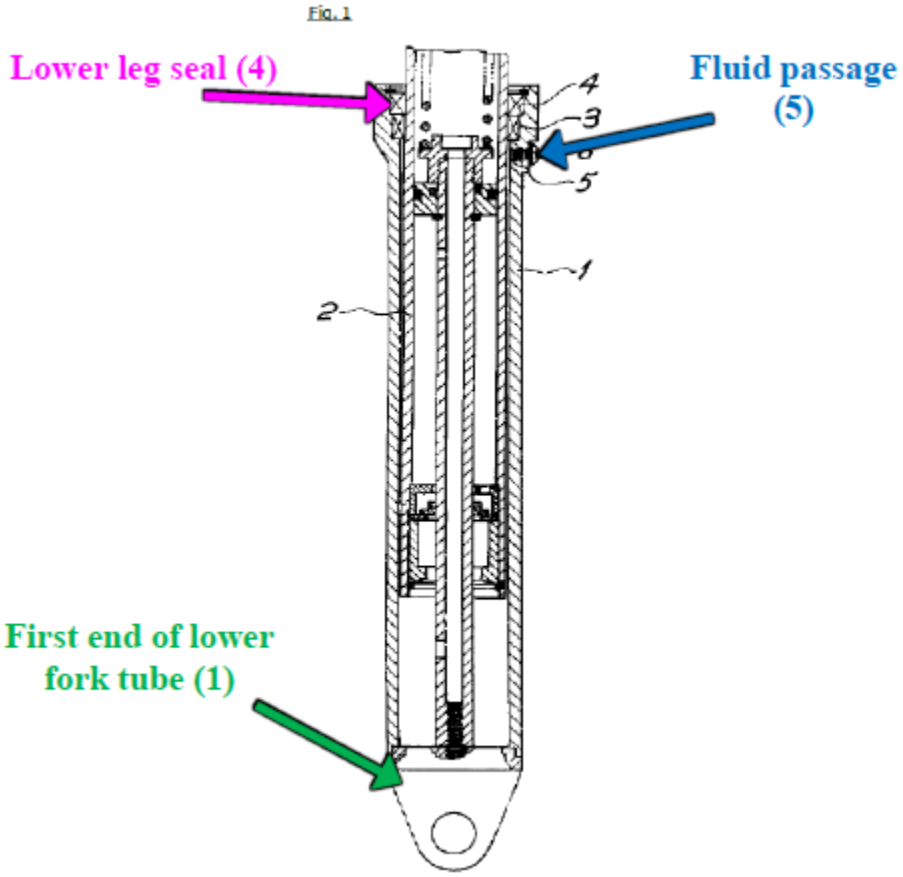

Annotated Figure 1 is a partial cross-sectional view of a front fork with a breather. Ex. 1105, 9. In the annotations, Petitioner identifies "First end of lower fork tube (1)" in green, "Lower leg seal (4)" in purple, and "Fluid passage (5)" in blue. Petitioner asserts annotated Figure 1 shows a fluid passage with a manually operable valve 6, 7 located in lower fork 1. *Id.* at 24. Petitioner contends that Kashima teaches that opening valve 6,7 equalizes ambient pressure within lower fork 1. *Id.* at 22. Petitioner further contends that Kashima includes a fluid passage 5 and manually operable valve 6, 7, which are located at a distance from an oil bath lubrication within lower fork 1 that allows most of the oil to stay in the lower fork. *Id.* at 26.

According Petitioner, this is because "valve [6, 7] is near the top of the lower fork 1 and can be closed once any oil fluid passage begins to leak." *Id.* at 26–27 (citing Ex. 1105 ¶ 4). Petitioner adds that the "air in lower fork 1 will be equalized to ambient pressure when valve 6, 7 is opened, while the vast majority of the oil will remain in the oil bath lubrication space within the lower fork 1." *Id.* at 27.

Turning to Kashima, we observe that Kashima teaches that when air remains in the gap between the inner peripheral surface of the outer tube and the outer peripheral surface of the inner tube, "hydraulic fluid cannot be supplied to the sliding surfaces of the bearing and oil seal, etc. due to the presence of air when the front fork is compressed, and this leads to a loss of smoothness." Ex. 1105 ¶ 2. Kashima further teaches threaded hole 5 near bearing 3 along with "an air breather," including setscrew 6 with oil seal 7. *Id.* ¶ 3. Kashima explains that when threaded hole 5 is opened, inner tube 2 is compressed along with leakage of hydraulic fluid from inside of outer tube 1 and a user "can confirm that any air present in the clearance has been exhausted." *Id.* ¶ 4.

Here, we understand Kashima to teach that when setscrew 6 is opened to release air in the clearance, oil is also released through the same opening. Ex. 1105 ¶ 4. In other words, the distance between setscrew 6 and the oil bath lubrication does not prevent the leakage of oil from the lower tube. Rather, setscrew 6 must be closed to prevent the oil from leaking and continuing to leak from the inside of outer tube 1. Indeed, Petitioner acknowledges the same. Petitioner asserts that "most if not all of the oil bath lubrication remains within the lower fork 1 *because the valve is near the top of the lower fork 1 and can be closed once any oil begins to leak*." Pet. 26–

27 (citing Ex. 1105 ¶ 4). Here, Petitioner acknowledges that it is the closing of the setscrew that stops the oil leakage. However, claim 1 requires that the fluid passage and manually operable valve "*are located at a distance* from an oil bath lubrication within said lower fork, *such that when said manually operable valve is in said second position, most, if not all of said oil bath lubrication remains within said lower fork[.]*" Ex. 1001, 5:2–7 (emphases added).

Petitioner's expert, Dr. Eric Wang, testified at the Preliminary Injunction Hearing in the parallel district court proceeding. His testimony there is consistent with our reading of Kashima. He testified under cross-examination by Patent Owner's litigation counsel that when the setscrew valve is open, oil comes out of Kashima's fork and that the setscrew must be closed to stop the oil leakage. Ex. 2005, 195:12–196:11. The cross-examination exchange between Patent Owner's litigation counsel and Dr. Wang is provided below:

> Q Listen to my question. I'm asking you to point to me where, in Kashima, is it teaching to use that screw valve to equalize air pressure, within the lower leg of the fork, to the ambient air pressure?
>
> A Maybe we're just having a misunderstanding of the words, but I read this as, open the hole, it equalizes the air pressure, and now you can, in this case, extract all of the remaining air out of that space, by compressing the fork. That's what it's teaching you to do, is open the valve, to equalize, let the air out. Compress the fork to bleed out all of the air. *It is literally a bleed valve, which bleeds out all of the air, until oil comes out basically.*
>
> Q And if oil comes out of the threaded hole and significant oil amount of oil will leak out, the requirement -- the claim requirement, most, if not all, remains in the lower fork, is not met, right?

> A I don't know. It says here, in the leakage the hydraulic fluid inside the inner tube is observed, that could be as Dr. Slocum says, a millimeter cube of oil, that would not be a substantial amount. In fact, by definition, if you went to bleed the air out of the system, you purposely wouldn't bleed all of the oil out of the system. *You would allow a certain amount, a small, tiny bit amount. Soon as the first oil came out, you would close that valve.*

Id. (emphases added).

For these reasons, we determine that Petitioner has not demonstrated a reasonable likelihood of prevailing on this challenge against claim 1 of the ’331 patent.

2. Dependent Claims 2, 3, and 5

Petitioner argues Kashima discloses the features of each of dependent claims 2, 3, and 5 (which depend from independent claim 1). Pet. 27–31.

As discussed above, we determine that Petitioner has not demonstrated a reasonable likelihood of prevailing on this challenge against claim 1. Claims 2, 3, and 5 depend from claim 1. For the same reasons discussed, we determine that Petitioner has not demonstrated a reasonable likelihood that it would prevail in showing Kashima anticipates dependent claims 2, 3, and 5.

F. Asserted Obviousness Based on Kashima, Bruckbauer, and Danter

Petitioner asserts that claims 1–8 would have been obvious under 35 U.S.C. § 103 based on Kashima, Bruckbauer, and Danter. Pet. 32–52. Patent Owner opposes. Prelim. Resp. 20–26. Having considered the arguments and evidence before us, we conclude that Petitioner has not demonstrated a reasonable likelihood of prevailing on its assertions that the combination of Kashima, Bruckbauer, and Danter renders obvious claims 1–8.

We note first that for claims 1–4 and 7–8, Petitioner does not rely upon or discuss Danter for this obviousness challenge. *See* Pet. 32–52, 37 (discussing Danter for claims 5 and 6).

Further, in the combination of Kashima and Bruckbauer, Petitioner relies on Kashima to teach that the positioning of Kashima's valve in lower fork 1 results in most of the oil remaining in lower fork 1, i.e., limitation [1g] of independent claim 1. Specifically, Petitioner argues that

> *Kashima* in view of *Bruckbauer* discloses *Kashima's* fluid passage **5** and *Bruckbauer's* manually operable valve **54, 36, 14, 70** are located at a distance from an oil bath lubrication within the lower fork **1**. This positioning of the valve results in a configuration wherein when the manually operable valve is in the second position (open position), *most if not all of the oil bath lubrication remains within the lower fork **1** because the valve is positioned near the top of the lower fork **1** and can be closed once oil begins to leak.*

Pet. 43 (citing Ex. 1105 ¶ 4, Fig. 1). While Petitioner substitutes Bruckbauer's valve for Kashima's, the position of the valve is in the same location shown in Kashima's Figure 1. *See id.* at 36 ("The combination of Kashima and Bruckbauer would merely be the combination of known prior art elements (Kashima's typical vehicle suspension fork and Bruckbauer's known pressure relief valve 10) according to known methods (Bruckbauer's known pressure relief valve 10 may directly screw into Kashima's threaded hole 5).").

As explained above, we are not persuaded that Kashima's teaches that independent claim 1's fluid passage and manually operable valve "*are located at a distance* from an oil bath lubrication within said lower fork, *such that when said manually operable valve is in said second position, most, if not all of said oil bath lubrication remains within said lower fork[.]*"

Ex. 1001, 5:2–7 (emphases added). *See supra* Section III.E. Because Bruckbauer's teaching of valves does not remedy the deficiency in Kashima, we determine Petitioner has not demonstrated a reasonable likelihood that it would prevail in showing combination of Kashima and Bruckbauer renders obvious claims 1–4 and 7–8.

Likewise, for claims 5 and 6, Petitioner relies on Danter solely for Danter's disclosure of die-casting processes. Pet. 37. Because Danter's die-cast process does not remedy the deficiency in Kashima, we determine Petitioner has not demonstrated a reasonable likelihood that it would prevail in showing combination of Kashima, Bruckbauer, and Danter renders obvious dependent claims 5 and 6.

G. Asserted Anticipation By Hoose

Petitioner asserts that claims 1 and 2 are anticipated under 35 U.S.C. § 102(b) by Hoose. Pet. 53–64. Patent Owner opposes. Prelim. Resp. 26–29. Having considered the arguments and evidence before us, we conclude that Petitioner has not demonstrated a reasonable likelihood of prevailing on its assertions as to at least independent claim 1, which we address below.

1. Independent Claim 1

The Petition outlines how Hoose discloses the features of independent claim 1. Pet. 55–63. Below, we analyze Petitioner's contentions as applied to the required elements of claim 1.

Claim 1 is generally directed to a lower fork and air bleed assembly combination that includes:

> [1a] a lower fork, said lower fork configured to have a first end coupled to a vehicle wheel, and a second end configured to be

> telescopically engaged with a first end of an upper fork, said lower fork further comprising:
>
> [1b] a lower leg seal located at an outermost edge of said second end of said lower fork tube, said lower leg seal configured for sealing closed a gap disposed between said upper fork tube and said lower fork tube when said lower fork is telescopically engaged with said first end of said upper fork, thereby preventing an oil bath lubrication occupying an area within said lower fork tube at a first end of said lower fork tube from leaking from said lower fork; and
>
> [1c] an upper bushing attached to and positioned adjacent to said lower leg seal.

Ex. 1001, 4:39–55.

For these limitations, Petitioner argues that Hoose teaches vehicle wheel 8 is coupled to first end 142 of lower fork 140 that is telescopically engaged with upper fork 112. Pet. 56. For convenience, annotated Figures 8 and 9 that appear on page 56 of the Petition are reproduced below:

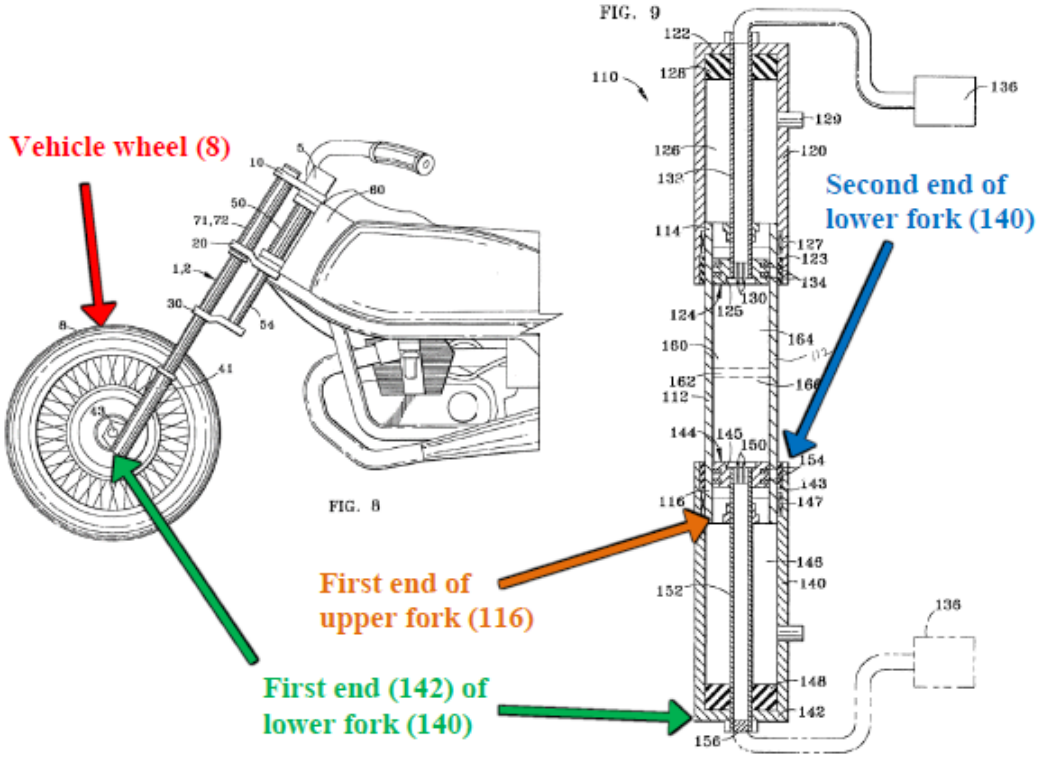

In Petitioner's annotated version of Hoose's Figures 8 and 9, the first end of a lower fork is marked in green, the first end of upper fork 116 is marked in orange, the vehicle wheel 8 is marked in red, and the second end of the lower fork is marked in blue. Pet. 56.

In addition, Petitioner argues that Hoose teaches lower leg seal 143 located at an outermost edge of the second end of lower fork tube 140. Petitioner contends that lower leg seal 143 seals a gap between upper fork tube 112 and lower fork tube 140 when lower fork 140 is telescopically engaged with first 116 of upper fork 112 and prevents an oil bath lubrication occupying an area within said lower fork tube at a first end from leaking from the lower fork. Pet. 57. For the oil bath lubrication, Petitioner contends that Hoose's stem portion 152 and shock chamber 146 may be

filled with oil. Pet. 57 (citing Ex. 1102 ¶ 134; Ex. 1103 ¶ 130; Ex. 1108, 6:21–25, 6:51–57, 7:4, Fig. 9). Petitioner's annotated version of Hoose's Figure 9 is provided below:

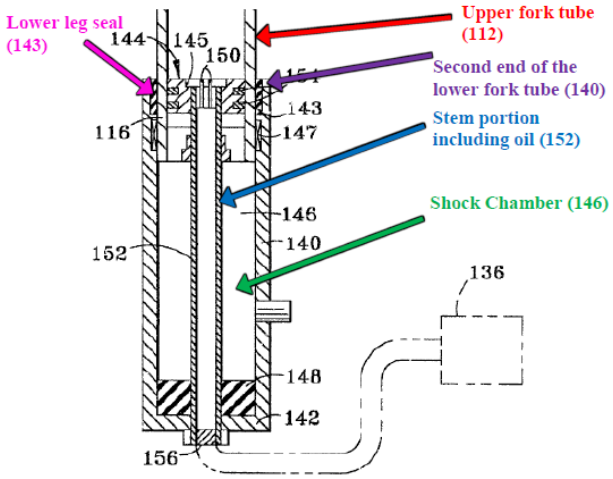

In Petitioner's annotated figure, shock chamber 146 is identified in green, stem portion 152 is identified in blue, second end of the lower fork tube (140) is identified in purple, and lower leg seal 143 is identified in pink. Pet. 58. Further, Petitioner contends that Hoose's bearing 147 discloses an "upper bushing." Pet. 59 (citing Ex. 1102 ¶ 135; Ex. 1103 ¶ 131; Ex. 1108, Fig. 9).

Petitioner's arguments do not clearly explain how lower leg seal 143 is "configured for sealing closed a gap disposed between said upper fork tube . . . thereby preventing an oil bath lubrication occupying an area within said lower fork tube at a first end of said lower fork tube from leaking from said lower fork." Ex. 1001, 4:45–53. Hoose discloses that first housing 120 and second housing 140 each include seals 123, 143, respectively, to seal against shock tube 112 and bearings 127, 147 "to aid slidability with shock tube 112." Ex. 1108, 6:5–8. Hoose adds that "[t]hese seals allow suspension 110 to operate without the need for a rubber boot to protect

suspension 110 from debris." *Id.* at 6:9–10. We observe that Hoose does not teach expressly that seal 143 prevents oil from leaking from the lower fork.

Moreover, stem portion 152 extends from first end 142 of lower fork 140 to second end of lower fork (marked in purple above). Petitioner argues that the walls of stem portion 152 isolate the oil within stem portion 152. *See* Pet. 62–63 ("[M]ost, if not all of the oil bath lubrication within: (A) the stem portion 152 remains within the lower fork 140 because the valve 129 is isolated from the oil via the walls of the stem portion 152."). As such, it is unclear from the Petition, how the seal 143 would prevent oil leakage from oil in stem portion 152 if that oil is isolated within stem portion 152.

To be sure, Petitioner also argues that sealed shock chamber 146 may be filled with oil. Pet. 57. Petitioner, however, contends that the level of oil is low enough relative to the level of Hoose's valve 129 so that most of the oil remains in shock chamber 146. *Id.* at 63. Assuming this to be the case, it remains unclear from Petitioner's arguments how seal 143, which is above the level of valve 129 at the second end of lower fork 140, prevents oil leakage from an oil bath lubrication that is presumably below the level of valve 129. Because Petitioner's arguments lack clarity on this point, we are not persuaded that Petitioner has sufficiently explained how Hoose discloses this limitation.

Additionally, we note that Petitioner's arguments regarding limitation [1g] are also unpersuasive. Petitioner provides an annotated version of Hoose's Figure 9 reproduced below:

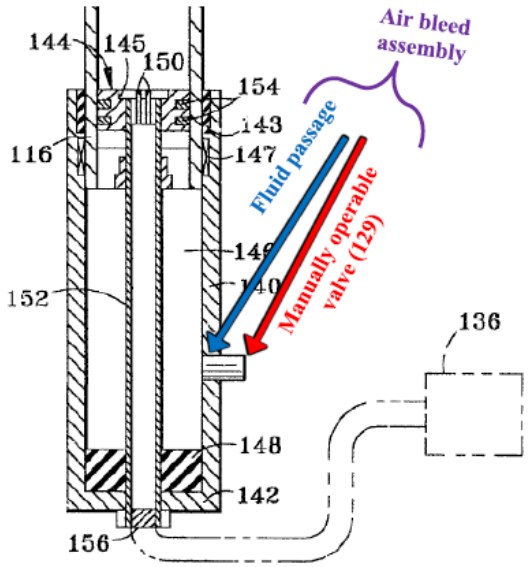

Annotated Figure 9 includes Petitioner's annotations: air bleed assembly (purple), fluid passage (blue), and manually operable valve (red). Pet. 60. According to Petitioner, "Hoose has a manually operable valve 129 that may be used to manually pressurize Hoose's shock chamber 126. Hoose's valve 129 is disposed between the lower leg seal 143 and the first end 142 of the lower fork 140." Pet. 61–62 (citing Ex. 1102 ¶ 138; Ex. 1103 ¶ 134; Ex. 1108, Fig. 9). Petitioner contends that fluid passage (blue) accommodates valve 129. For limitation [1g], Petitioner contends that

> [t]his positioning of the valve 129 results in a configuration wherein when the manually operable valve 129 is in the second position (open position), most, if not all of the oil bath lubrication within: (A) the stem portion 152 remains within the lower fork 140 because the valve 129 is isolated from the oil via the walls of the stem portion 152 and (B) *the shock chamber 146 remains within the lower fork 140 because the level of oil is low enough relative to the level of the valve 129, and the valve 129 can be closed were any oil to leak.*

Pet. 62–63 (Ex. 1102 ¶ 139; Ex. 1103 ¶ 135; Ex. 1108, Fig. 9) (emphases added).

Again, Petitioner relies on the closing of valve 129 to stop oil leakage, which does not teach a fluid passage and a manually operable valve "*are located at a distance* from an oil bath lubrication within said lower fork, *such that when said manually operable valve is in said second position, most, if not all of said oil bath lubrication remains within said lower fork[.]*" Ex. 1001, 5:2–7 (emphases added). We are mindful that stem portion 152 may isolate oil from valve 129. Nonetheless, Petitioner asserts that both stem portion 152 and *shock chamber 146* are filled with oil. Pet. 57. And, when filled with oil, Petitioner concedes that shock chamber 146 leaks oil through valve 129, which is stopped by closing the valve. *Id.* at 62–63. For these reasons, we are also not persuaded by Petitioner that Hoose teaches these features of independent claim 1.

Having considered the arguments and evidence before us, we conclude that Petitioner has not demonstrated a reasonable likelihood of prevailing on its assertions as to at least independent claim 1, which we address below.

2. Dependent Claims 2–8

As discussed above, we determine that Petitioner has not demonstrated a reasonable likelihood of prevailing on this challenge against claim 1. Claims 2–8 depend from claim 1. For the same reasons discussed, we determine that Petitioner has not demonstrated a reasonable likelihood that it would prevail in showing Hoose anticipates claim 1 or its dependent claims 2–8.

H. Asserted Obviousness Based on Hoose, Huang, and Danter

Petitioner asserts that claims 1–8 would have been obvious under 35 U.S.C. § 103 based on Hoose, Huang, and Danter. Pet. 65–81. Patent Owner opposes. Prelim. Resp. 26–29.

Petitioner largely relies on arguments and evidence presented and discussed above with regard to Petitioner's anticipation challenge based on Hoose. *See* Pet. 67–70. For this obviousness combination, Petitioner adds

> [c]ombining Hoose and Huang is straightforward: a POSITA would modify Hoose to substitute and improve Hoose's air valve 129 with Huang's air valve 1. Ex. 1109, FIGS. 2, 3A. A POSITA would have been motivated to make this *simple substitution* at least because Huang's valve 1 is well-known, relatively inexpensive, and easily operated with manual inputs. Ex. 1109, FIGS. 2 and 3A.

Id. at 66 (emphasis added). In other words, Petitioner proposes replacing Hoose's valve 129 with Huang's air bleed assembly 1. Petitioner contends that Huang's "air bleed assembly **1** is configured for equalizing ambient pressure within the lower fork **140**. When *Huang's* valve **1** is open, as shown in *Huang's* Figure 3A, the air pressure with the fork **140** equalizes with the ambient air pressure." *Id.* (citing Ex. 1102 ¶¶ 141–145; Ex. 1103 ¶¶ 137–141). Petitioner's annotated version of Huang's Figure 3A is provided below:

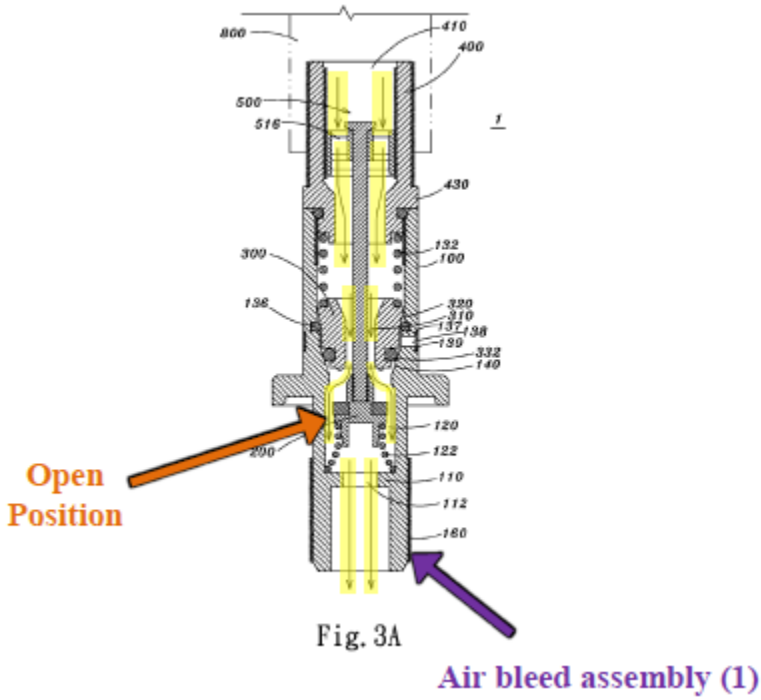

Fig. 3A

Petitioner's annotated Figure 3A includes "air bleed assembly (1)" marked in purple, "open position" marked in yellow, and yellow lines Petitioner asserts show fluid flow path when the valve is opened.

Referring to the annotated Figure 3A, Petitioner asserts that "Huang's manually operable valve 1 has a first position substantially closing the fluid passage . . . and a second position allowing a fluid to flow between the interior and the exterior. Pet. 68 (citing Ex. 1102 ¶¶ 146–147; Ex. 1103 ¶¶ 142–143). Petitioner adds that "*Huang's* valve **1** is isolated from the oil via the walls of the stem portion **152** and (B) the shock chamber **146** remains within the lower fork **140** because the level of oil is low enough relative to the level of *Huang's* valve **1**, and *Huang's* valve **1** can be closed were any oil to leak." Pet. 70.

Petitioner further asserts that "[a] POSITA would have been motivated to make this simple substitution at least because Huang's valve 1 is well-known, relatively inexpensive, and easily operated with manual

inputs." Pet. 66 (citing Ex. 1109, Figs. 2, 3A). Petitioner also contends that "[a] POSITA would have been motivated to improve Hoose by using Huang's air valve 1 at least because Huang's air valve 1 would allow for more convenient air insertion into Hoose, when needed." Pet. 67 (citing Ex. 1102 ¶ 83; Ex. 1103 ¶ 79).

Having considered the arguments and evidence before us, we conclude that Petitioner has not demonstrated a reasonable likelihood of prevailing on its assertions that the combination of Hoose, Huang, and Danter renders obvious claims 1–8.

In the combination of Hoose and Huang, Petitioner relies on Hoose to teach that the positioning of Hoose's valve in lower fork 1 results in most of the oil remaining in lower fork 1, i.e., limitation [1g] of independent claim 1. When Petitioner substitutes Huang's valve for Hoose's, the position of the valve is in the same location shown in Hoose and shock chamber 146 still leaks oil through the open valve. *See id.* at 70.

As explained above, we are not persuaded that Hoose teaches independent claim 1's requirement that the fluid passage and manually operable valve "*are located at a distance* from an oil bath lubrication within said lower fork, *such that when said manually operable valve is in said second position, most, if not all of said oil bath lubrication remains within said lower fork[.]*" Ex. 1001, 5:2–7 (emphases added). *See supra* Section III.G. Because Huang's teaching of valves does not remedy the deficiency in Hoose, we determine Petitioner has not demonstrated a reasonable likelihood that it would prevail in showing the combination of Hoose and Huang renders obvious claims 1–8.

Additionally, Petitioner relies on Danter's die-casting processes. Pet. 75–79. Because Danter's die-cast process does not remedy the deficiency in Hoose, we determine Petitioner has not demonstrated a reasonable likelihood that it would prevail in showing combination of Hoose, Huang, and Danter renders obvious dependent claims 5 and 6, or claims 1–4 and 7–8.

I. Asserted Anticipation By Ceriani

Petitioner asserts that claims 1–3 and 5 are anticipated under 35 U.S.C. § 102(b) by Ceriani. Pet. 82–109. Patent Owner opposes. Prelim. Resp. 29–33. Having considered the arguments and evidence before us, we conclude that Petitioner has not demonstrated a reasonable likelihood of prevailing on this challenge.

1. Independent Claim 1

The Petition outlines how Ceriani discloses the features of independent claim 1. Pet. 87–103.

For claim 1, Petitioner contends that Ceriani teaches a pair of air bleed assemblies. The first pair is shown in Petitioner's annotated versions of Figures 1 and 4 on page 88 of the Petition. These are provided below:

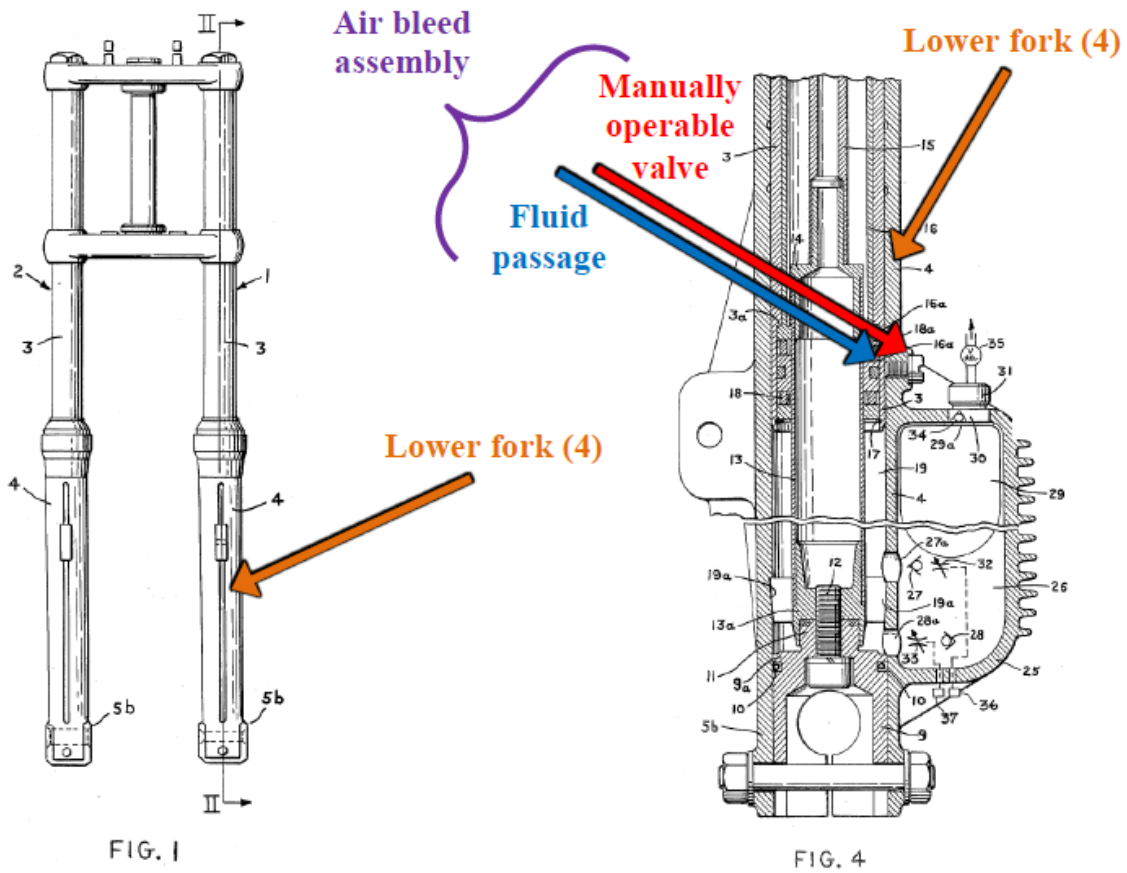

On page 88 of the Petition, Petitioner's annotated version of Ceriani's Figure 1 includes "Lower fork (4)" marked in orange. Pet. 88. On the same page of the Petition, Petitioner's annotated version of Ceriani's Figure 4 is marked with "air bleed assembly" in purple, "manually operable valve" in red, "fluid passage" in blue, and "lower fork" in orange. *Id.* According to Petitioner, "[w]hen Ceriani's screw is removed, the air pressure within the lower fork 4 equalizes with the ambient air pressure." Pet. 94 (citing Ex. 1102 ¶ 175; Ex. 1103 ¶ 171; Ex. 1110, Fig. 4).

Patent Owner contends that Ceriani does not disclose the function of the unlabeled screw cited by Petitioner as the "air bleed assembly," but that a POSITA would recognize the screw as a port for filling the fork with hydraulic fluid (oil). Prelim. Resp. 30. Patent Owner adds that the screw is

connected to piston chamber 19, which Ceriani teaches is completely filled with hydraulic fluid. Prelim. Resp. 31. Patent Owner contends that "because piston chamber 19 (to which the oil port is connected) is completely filled with hydraulic fluid (oil), there is no ambient air in the piston chamber to be released through the port to equalize air pressure." *Id.* (citing Ex. 1110, 3:13–17).

Based on the preliminary record, we agree with Patent Owner. Ceriani does not identify or describe the unlabeled screw marked in Petitioner's annotated Figure 4 from page 88 of the Petition. *See* Ex. 1100, Fig. 4. Dr. Wang's testimony in paragraph 175 and Mr. Wesling's testimony in paragraph 171 of their respective declarations mirror the Petition and do not elaborate on where the air pressure is equalized from in lower fork 4 via the screw. *See* Ex. 1102 ¶ 175; Ex. 1103 ¶ 171. Moreover, as noted by Patent Owner, Ceriani teaches that "piston chamber 19 and 19a and the portion of the expansion chamber 26 unoccupied by the pocket 29 *are completely filled up by the hydraulic fluid (oil)* before the introduction of the fluid under pressure in said pocket." Ex. 1110, 3:13–17. That being so, it is unclear from the Petition how Ceriani's unlabeled screw teaches the "air bleed assembly" required by claim 1.

Additionally, Petitioner argues that a second pair of structures in Ceriani teaches an "air bleed assembly." Pet. 89. Petitioner's annotated versions of Ceriani's Figures 1 and 4 are provided below:

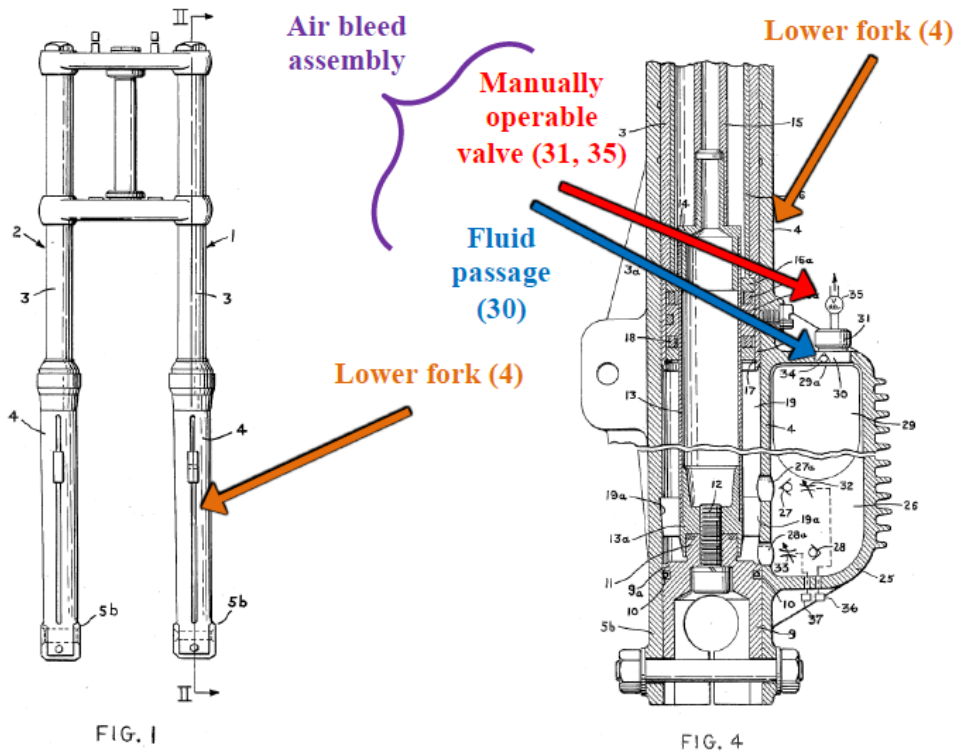

Ceriani's Figure 1 is a front elevational schematic view of a motorcycle form. Ex. 1110, 1:51–52. Ceriani's Figure 4 is an enlarged partial view of the lower portion of a section taken along line II-II of Figure 1. *Id.* at 1:58–59, 1:54–55. On page 89 of the Petition, Petitioner's annotated version of Ceriani's Figure 1 includes "Lower fork (4)" marked in orange. Pet. 89. On the same page of the Petition, Petitioner's annotated version of Ceriani's Figure 4 is marked with "air bleed assembly" in purple, "manually operable valve (31, 35)" in red, "fluid passage (30)" in blue, and "lower fork (4)" in orange. *Id.* According to Petitioner, "Ceriani's air bleed assembly (purple bracket) may be Ceriani's pressure relief valve 35 and pressure regulating valve 31 (the claimed manually operable valve), and passage 30." Pet. 95. Petitioner adds that "[t]hrough these valves 35, 31 and passage 30, any pressurized fluid, such as air, within the chamber 29 may be equalized with

ambient pressure." *Id.* (citing Ex. 1102 ¶ 176; Ex. 1103 ¶ 172; Ex. 1110, 3:9–13, 3:61–4:7, Fig. 4).

Patent Owner argues that Ceriani's pocket 29 is not an interior of the lower fork tube. Prelim. Resp. 3 n.4.

Ceriani teaches that pocket 29 is positioned inside expansion chamber 26. Ex. 1110, 3:3–4. Expansion chamber 26 is defined by hollow body or connection body 25, whose wall is formed by the outer wall of outer body 4. *Id.* at 2:48–51. In this way, we understand pocket 29 to be inside chamber 26 and that chamber 26 is formed outside of outer body 4. *Id.* Based on the preliminary record, we agree with Patent Owner that chamber 26 appears to be outside the interior of lower fork 4. *See* Pet. 89. Thus, even if vented, the air pressure inside pocket 29 is not inside the lower fork, which required by claim 1. *See* Ex. 1001, 4:56–58 ("[A]n air bleed assembly disposed on said lower fork tube, said air bleed assembly configured for *equalizing ambient pressure within said lower fork*.") (emphasis added).

Thus, having considered the arguments and evidence before us, we conclude that Petitioner has not demonstrated a reasonable likelihood of prevailing on its assertions as independent claim 1 for this challenge.

2. Dependent Claims 2, 3, and 5

As discussed above, we determine that Petitioner has not demonstrated a reasonable likelihood of prevailing on this challenge against claim 1. Claims 2, 3, and 5 depend from claim 1. For the same reasons discussed, we determine that Petitioner has not demonstrated a reasonable likelihood that it would prevail in showing Ceriani anticipates claim 1 or its dependent claims 2, 3, and 5.

J. Asserted Obviousness Based on Ceriani, Bruckbauer, and/or Danter

Petitioner asserts that claims 1–8 would have been obvious under 35 U.S.C. § 103 based on Ceriani, Bruckbauer, and/or Danter. Pet. 110–126. Patent Owner opposes. Prelim. Resp. 29–33. Having considered the arguments and evidence before us, we conclude that Petitioner has not demonstrated a reasonable likelihood of prevailing on its assertions

In the combination of Ceriani and Bruckbauer, Petitioner relies on Ceriani's piston chamber 19 and pocket 29 to teach the inside of a lower fork where air pressure may be trapped. Pet. 110–111. Petitioner relies on Bruckbauer's teaching of a pressure relief valve for substitution into Ceriani's valves. Pet. 112. More specifically, Petitioner asserts that

> [a] POSITA would have been motivated to add Bruckbauer's pressure relief system to a portion of Ceriani's lower tubes 4 at two different points to reach these two areas of known, trapped gases: (1) at the screw to vent the piston chamber 19, 19a and (2) at the valves 31, 35 to vent the pocket 29. By adding a means for manual venting of these regions of pressure, pressure of any gas trapped within the [] piston chamber 19, 19a or the pocket 29 may be equalized with ambient pressure.

Id. at 111–112.

As explained above, we are not persuaded that Ceriani teaches "an air bleed assembly disposed on said lower fork tube, said air bleed assembly configured for equalizing ambient pressure within said lower fork" because pocket 29 is not inside outer fork 4. *See* supra Sect. III.I.

Moreover, we observe that Ceriani does not identify or describe the unlabeled screw marked in Petitioner's annotated Figure 4 from page 88 of the Petition. *See* Ex. 1100, Fig. 4. Dr. Wang's testimony in paragraph 175 and Mr. Wesling's testimony in paragraph 171 of their respective declarations mirror the Petition and do not elaborate on where the air

pressure is equalized from in lower fork 4 via the screw. *See* Ex. 1102 ¶ 175; Ex. 1103 ¶ 171. Moreover, Ceriani teaches that "piston chamber 19 and 19a and the portion of the expansion chamber 26 unoccupied by the pocket 29 *are completely filled up by the hydraulic fluid (oil)* before the introduction of the fluid under pressure in said pocket." Ex. 1110, 3:13–17. That being so, it is unclear from the Petition how Ceriani's unlabeled screw teaches the "air bleed assembly" required by claim 1 when chamber 19 is filled completely with oil.

While Petitioner substitutes Bruckbauer's valve for Ceriani's, the position of the valve, this substitution does not cure the deficiencies of Ceriani discussed above.

Likewise, for claims 5 and 6, Petitioner relies on Danter's disclosure of die-casting processes. Pet. 122–125. Because Danter's die-cast process does not remedy the deficiencies in Cerinia, we determine Petitioner has not demonstrated a reasonable likelihood that it would prevail in showing combination of Ceriani, Bruckbauer, and Danter renders obvious dependent claims 5 and 6, or claims 1–4 and 7–8.

IV. CONCLUSION

Based on the current record, and for the reasons explained above, we find Petitioner has not demonstrated a reasonable likelihood that it would prevail with respect to at least one claim challenged in the Petition. Thus, decline to institute *inter partes* review.[8]

[8] Patent Owner also argues that we should deny review under § 314(a). *See* Prelim. Resp. 33–44. We do not address this argument because we deny the Petition for reasons explained above.

IV. ORDER

Upon consideration of the record before us, it is:

ORDERED that the Petition is denied, and no trial is instituted.

FOR PETITIONER:

Michael J. Hickey
Michael H. Durbin
Richard B. Walsh, Jr.
LEWIS RICE LLC
mhickey@lewisrice.com
mdurbin@lewisrice.com
rwalsh@lewisrice.com

FOR PATENT OWNER:

Joshua L. Goldberg
Arpita Bhattacharyya
FINNEGAN, HENDERSON, FARABOW, GARRETT, & DUNNER LLP
joshua.goldberg@finnegan.com
arpita.bhattacharyya@finnegan.com