US 20150265022A1

(19) United States

(12) Patent Application Publication

MACLAINE

(10) Pub. No.: US 2015/0265022 A1

(43) Pub. Date: Sep. 24, 2015

(54) **ATTACHMENT FOR A HAND HELD APPLIANCE**

(71) Applicant: **Dyson Technology Limited**, Wiltshire (GB)

(72) Inventor: **Alasdair Michael MACLAINE**, London (GB)

(73) Assignee: **DYSON TECHNOLOGY LIMITED**, Wiltshire (GB)

(21) Appl. No.: **14/656,375**

(22) Filed: **Mar. 12, 2015**

(30) **Foreign Application Priority Data**

Mar. 20, 2014 (GB) 1404986.0

Publication Classification

(51) **Int. Cl.**

A45D 20/10 (2006.01)

A45D 20/50 (2006.01)

(52) **U.S. Cl.**

CPC ***A45D 20/10*** (2013.01); ***A45D 20/50*** (2013.01)

(57) **ABSTRACT**

An attachment for a hand held appliance comprising a body having a first wall; a second wall; and a slot formed along at least part of the length of the attachment, wherein the slot is defined on a first side by a surface of the first wall and on a second side by a surface of the second wall. The first wall may be generally tubular. The surface of the second wall may be substantially linear. The second wall may extend out from the first wall. The second wall may be moveable or rotatable relative to the first wall. The second wall may be generally triangular. The second wall may have a first indexed position defining a first slot position. The second wall may have a second indexed position defining a second slot position. An indexed position may be defined by a detent mechanism.

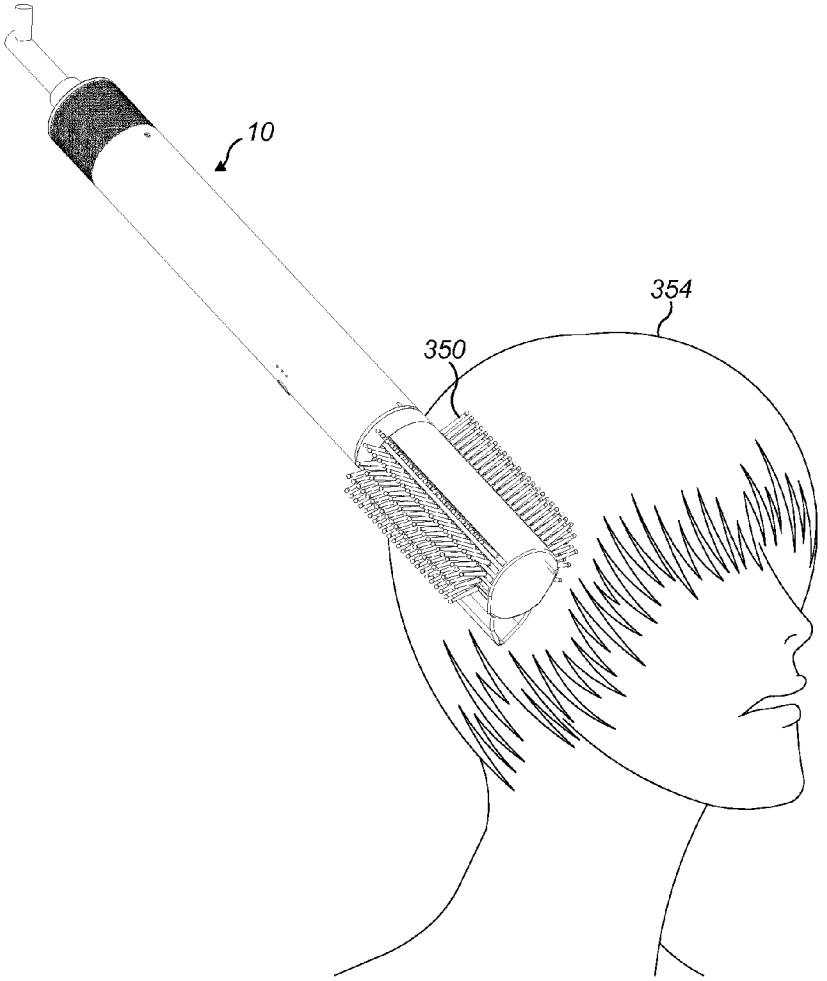

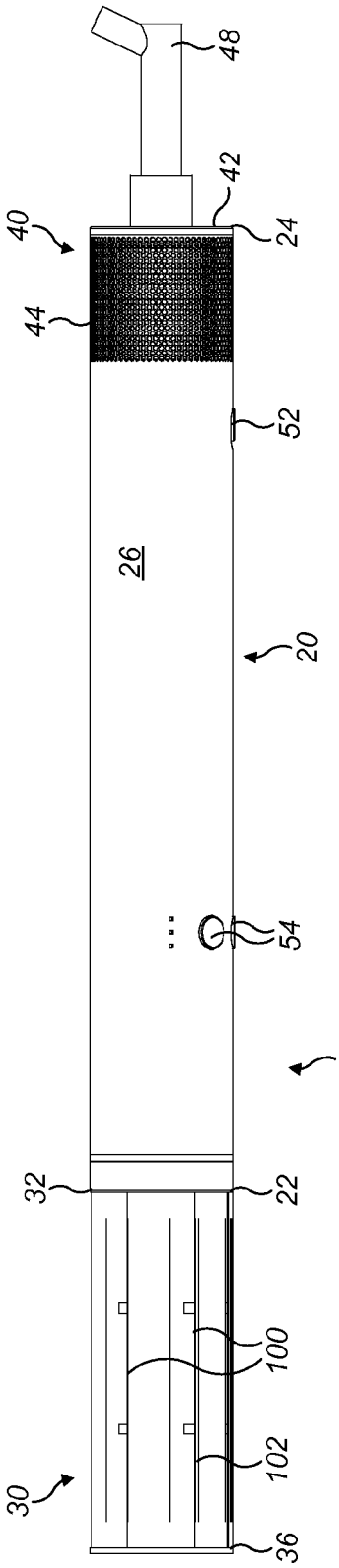
48
42
40
24
44
52
26
20
54
10
32
22
100
30
102
36

FIG. 1a

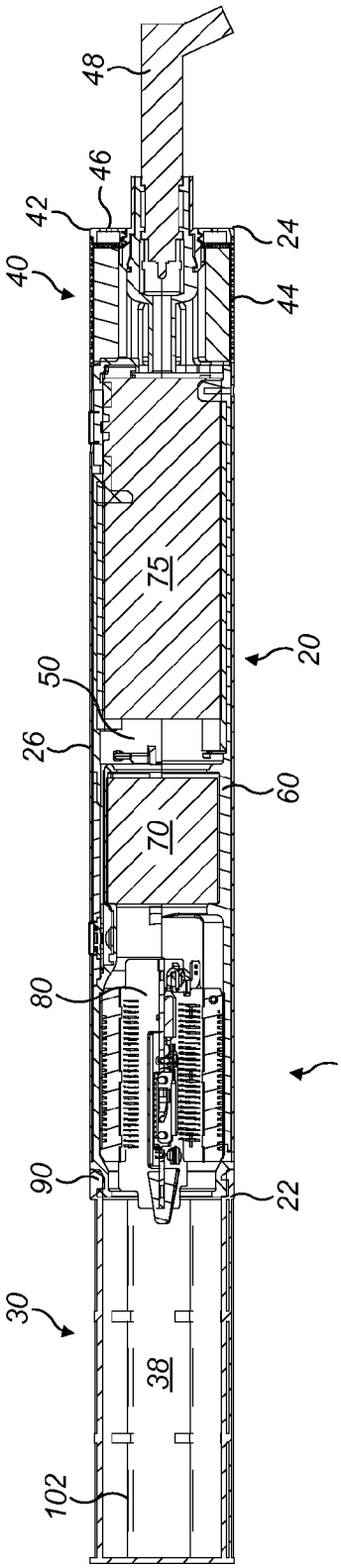
48
46
42
40
24
44
75
20
50
26
60
70
80
10
90
22
30
38
102

FIG. 1b

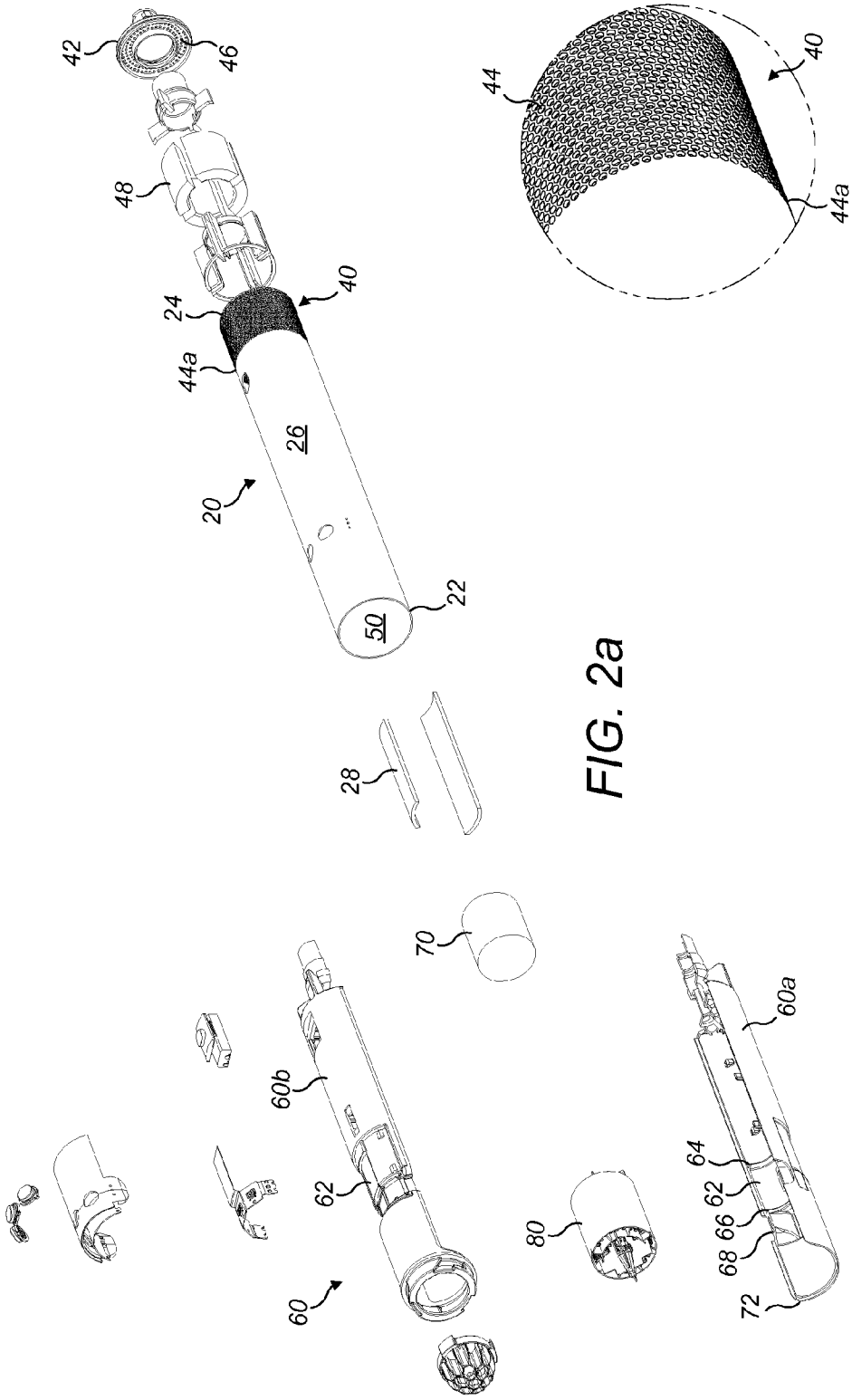
42
46
48
24
40
44a
26
20
22
50
28
70
60b
62
60
80
60a
64
62
66
68
72

FIG. 2a

44
40
44a

FIG. 2b

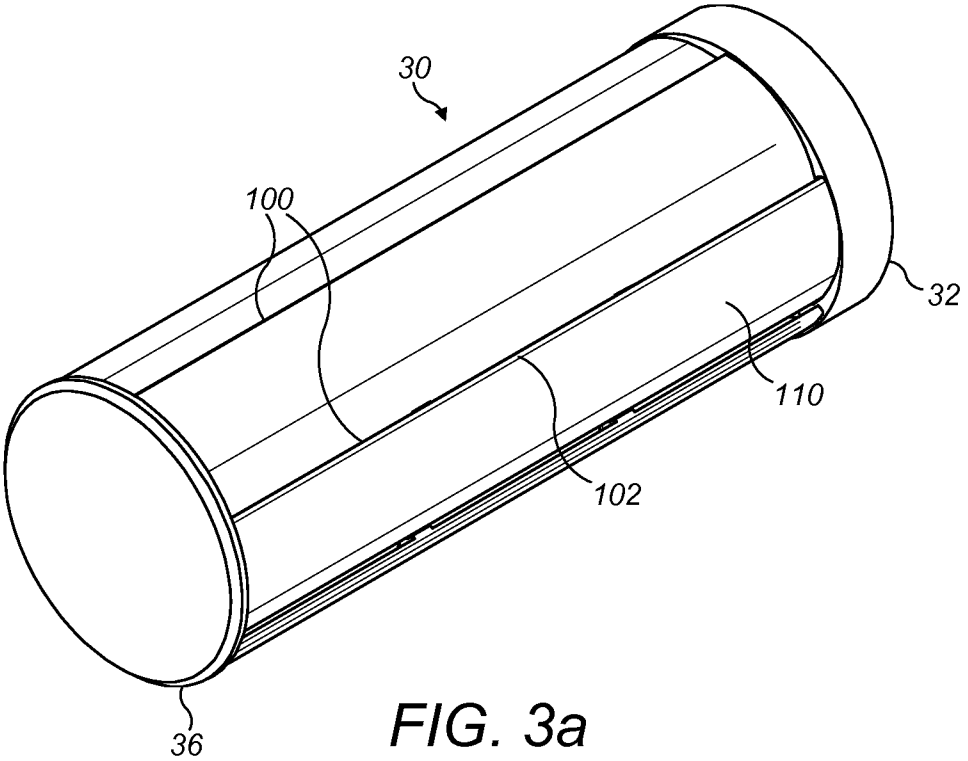

FIG. 3a

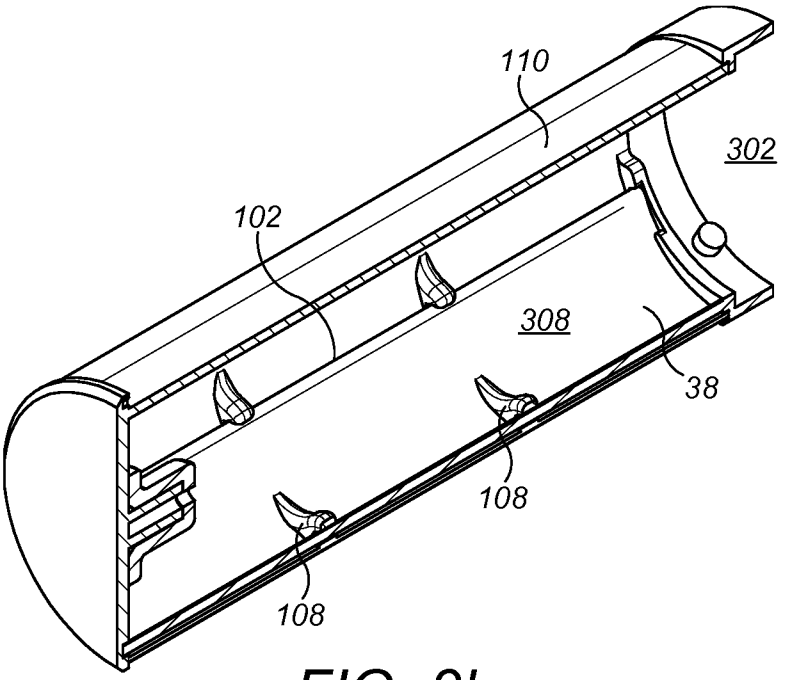

FIG. 3b

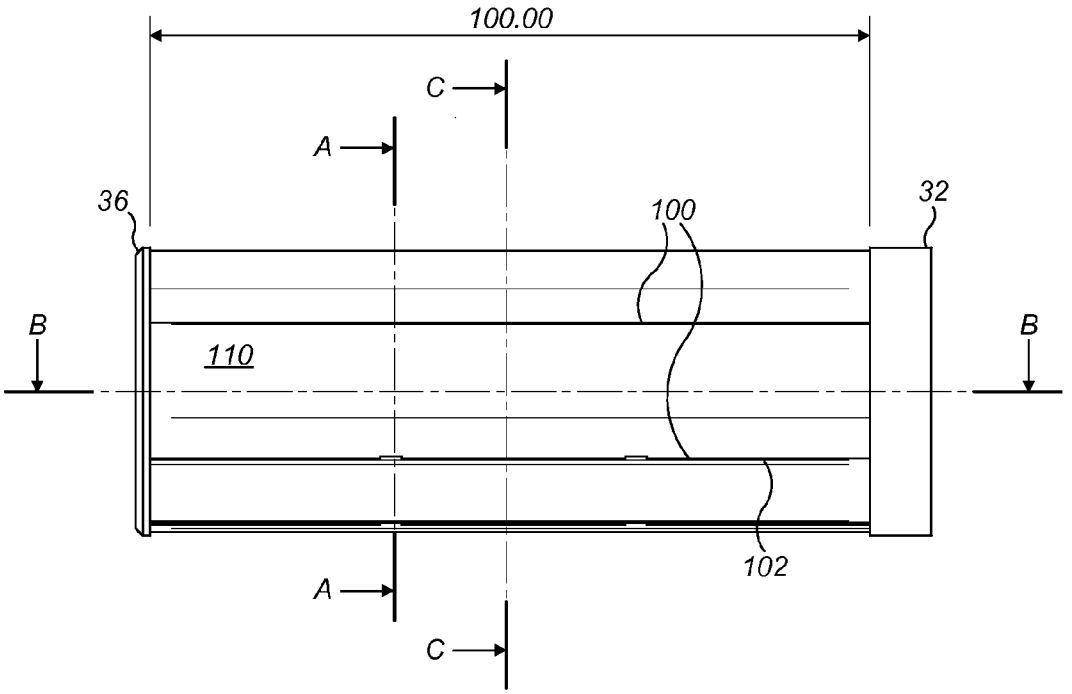

FIG. 4a

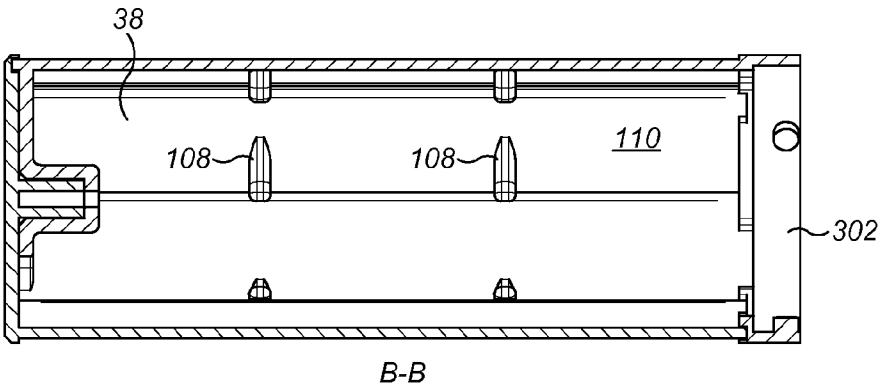

FIG. 4b

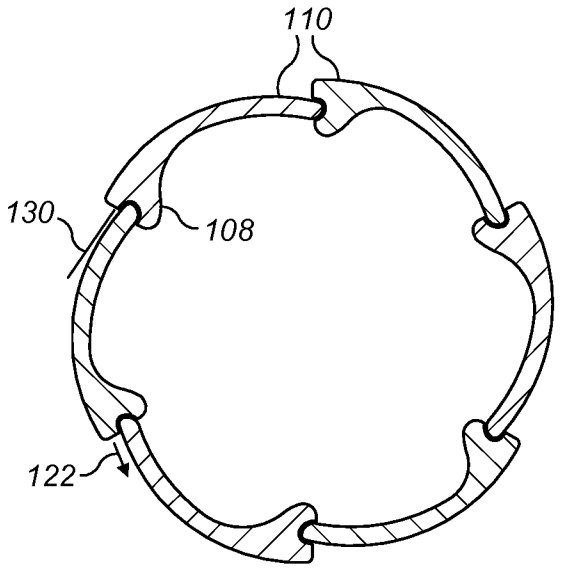

FIG. 5a

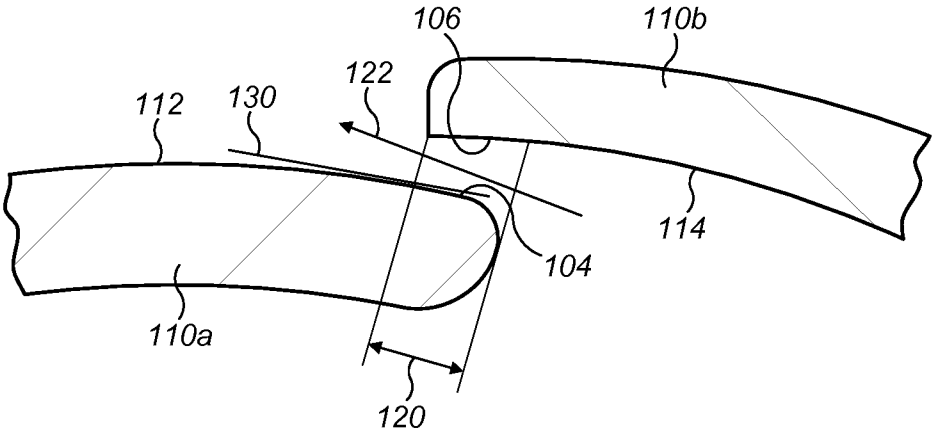

FIG. 5b

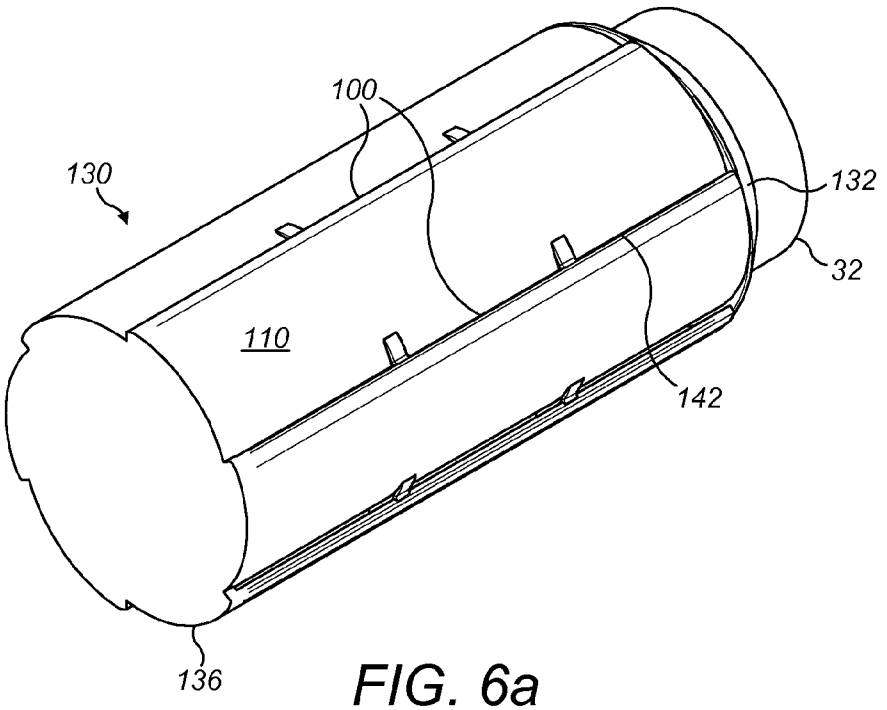

FIG. 6a

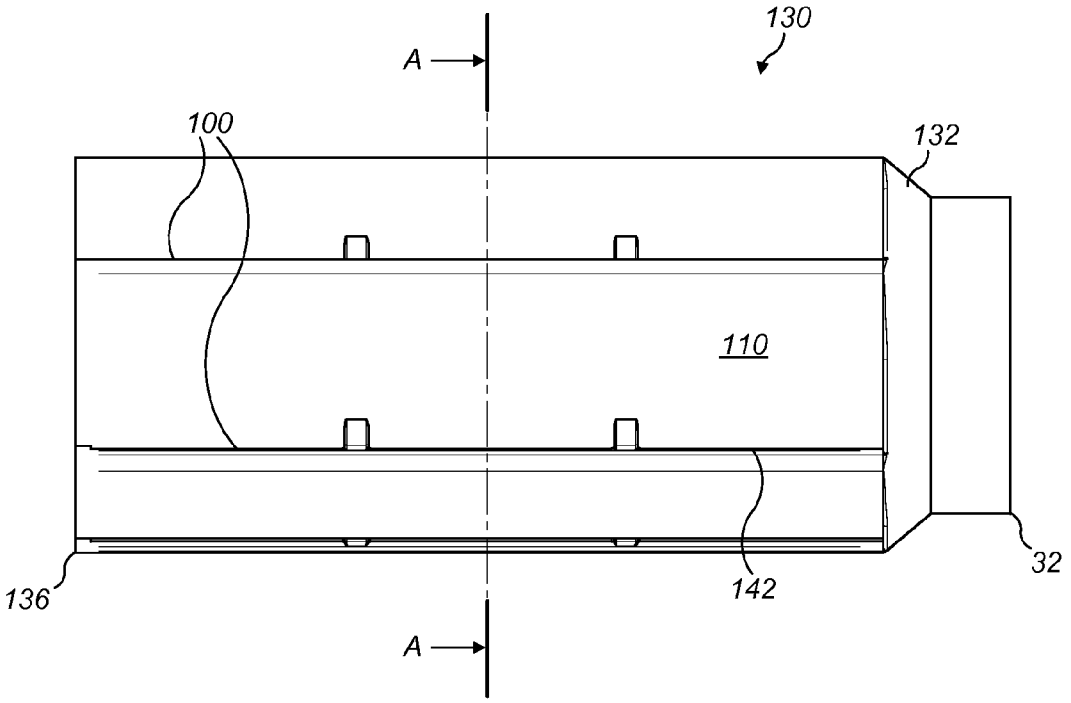

FIG. 6b

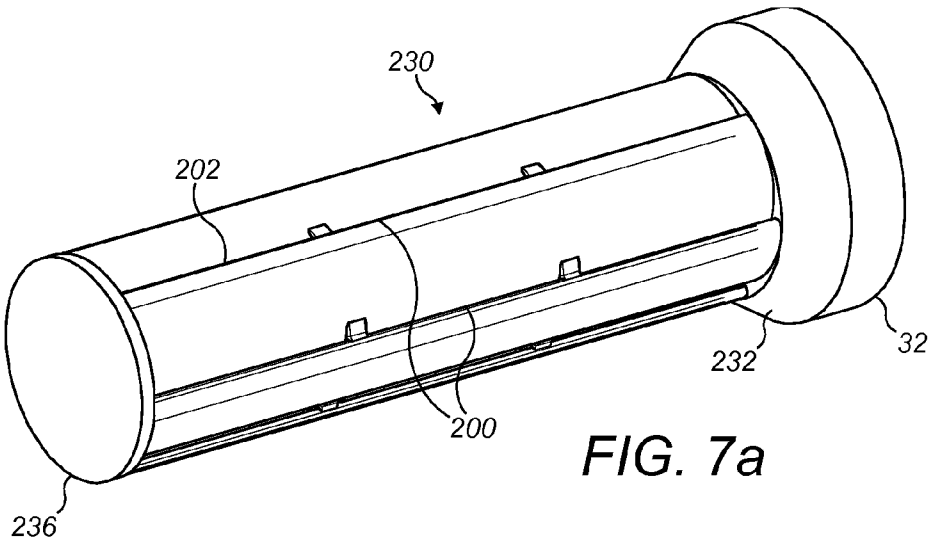

FIG. 7a

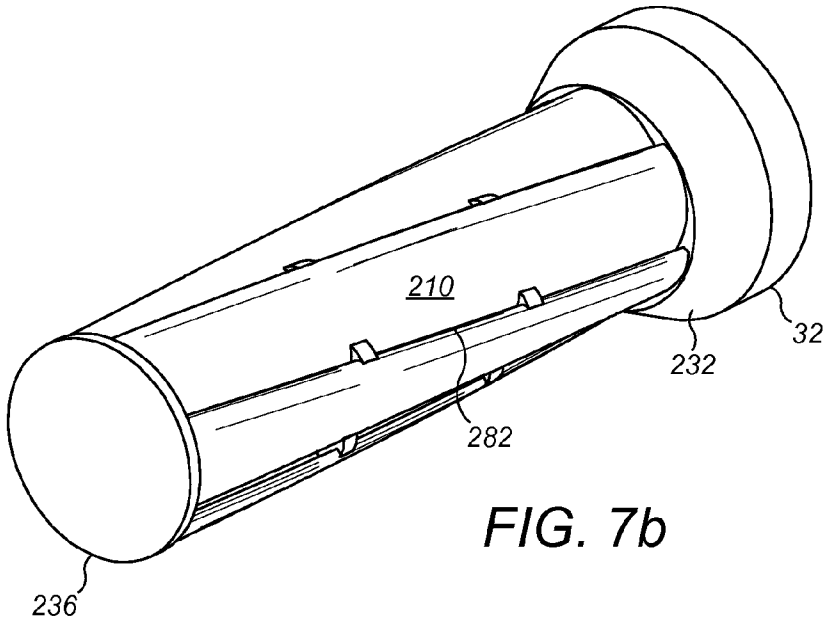

FIG. 7b

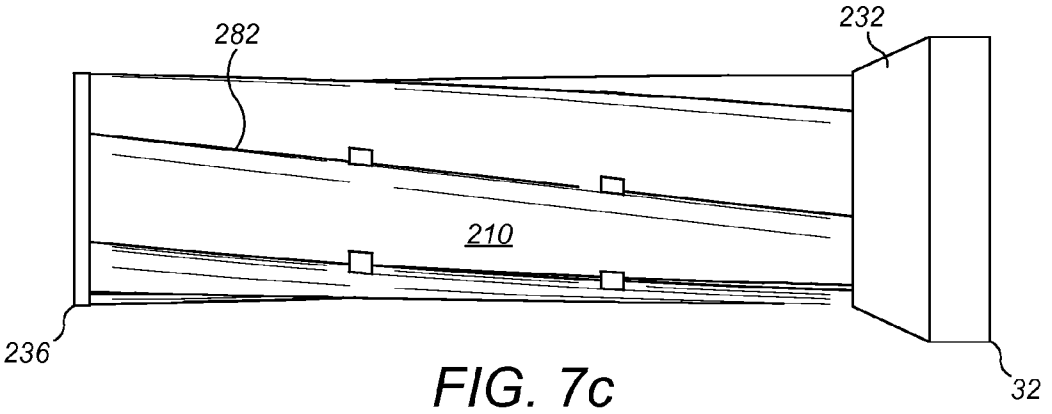

FIG. 7c

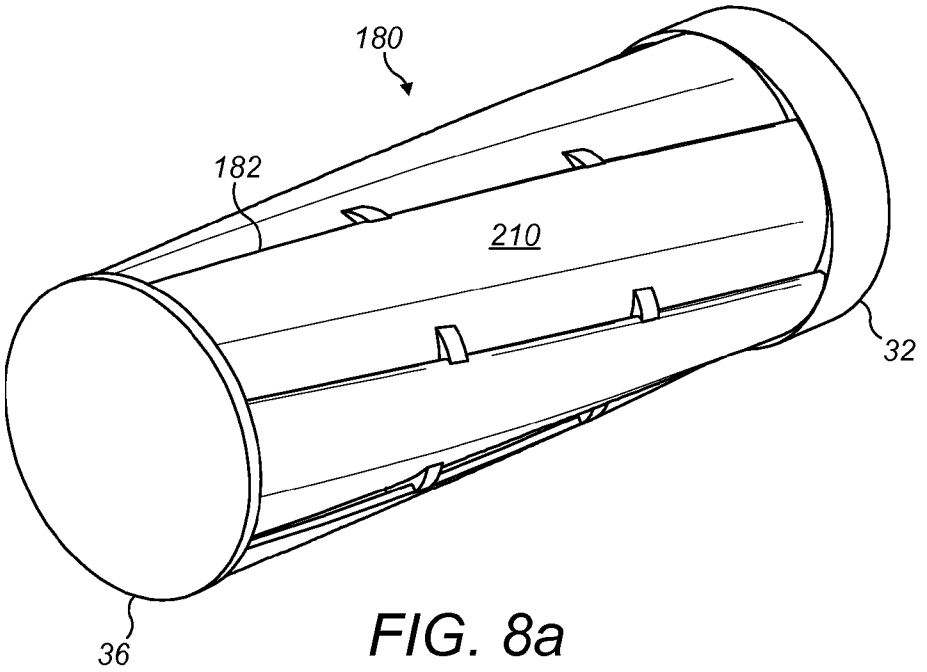

FIG. 8a

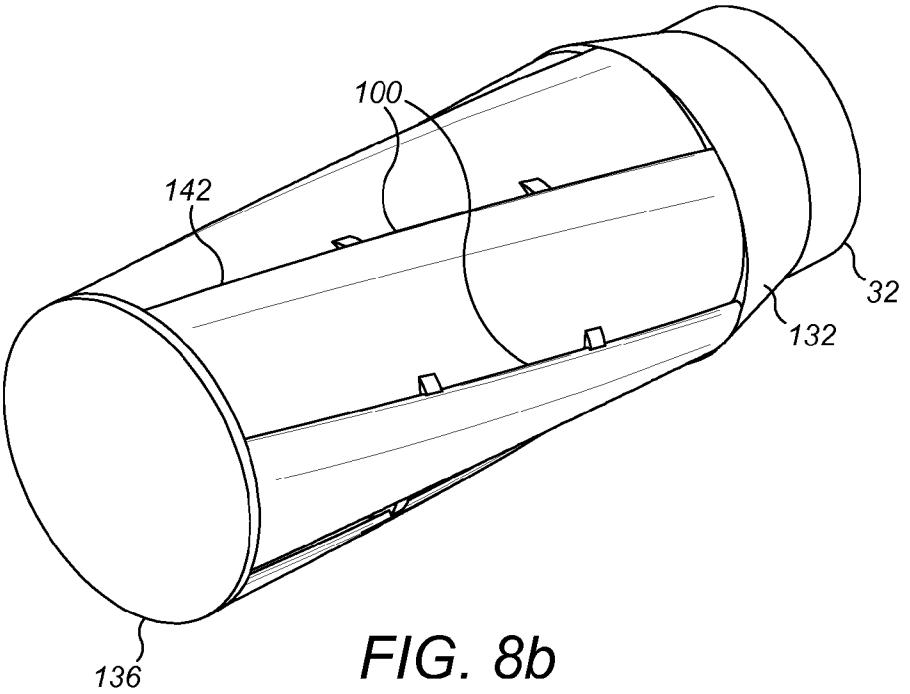

FIG. 8b

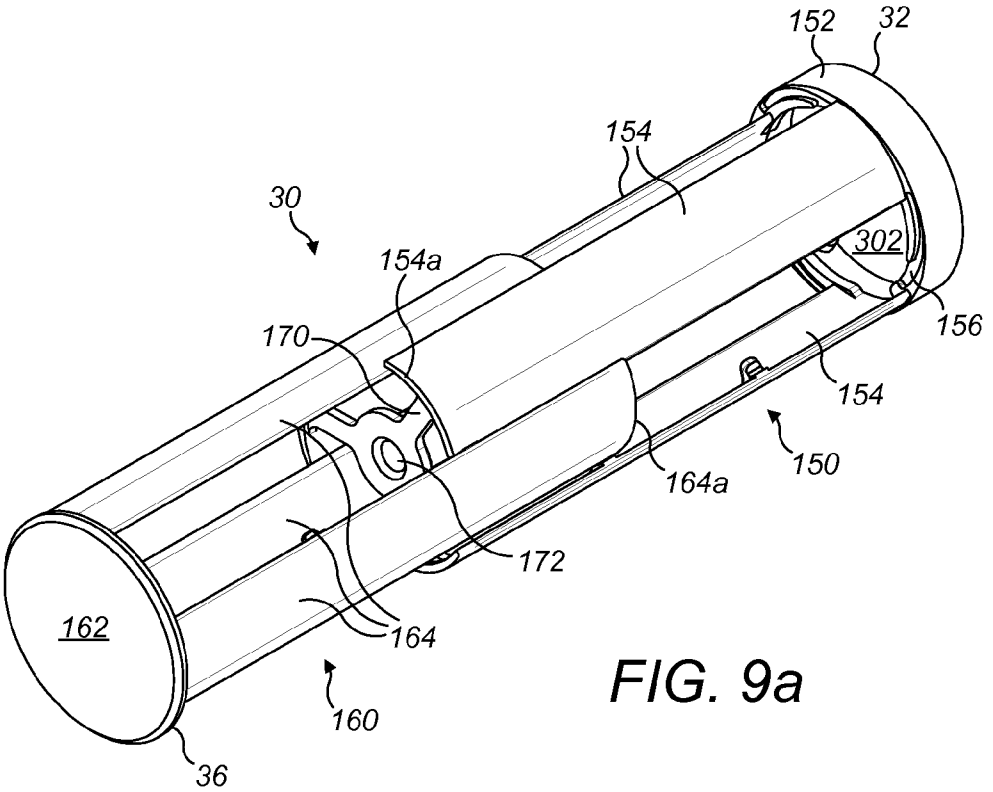
152
32
154
30
302
154a
156
170
154
150
164a
172
162
164
160
36

FIG. 9a

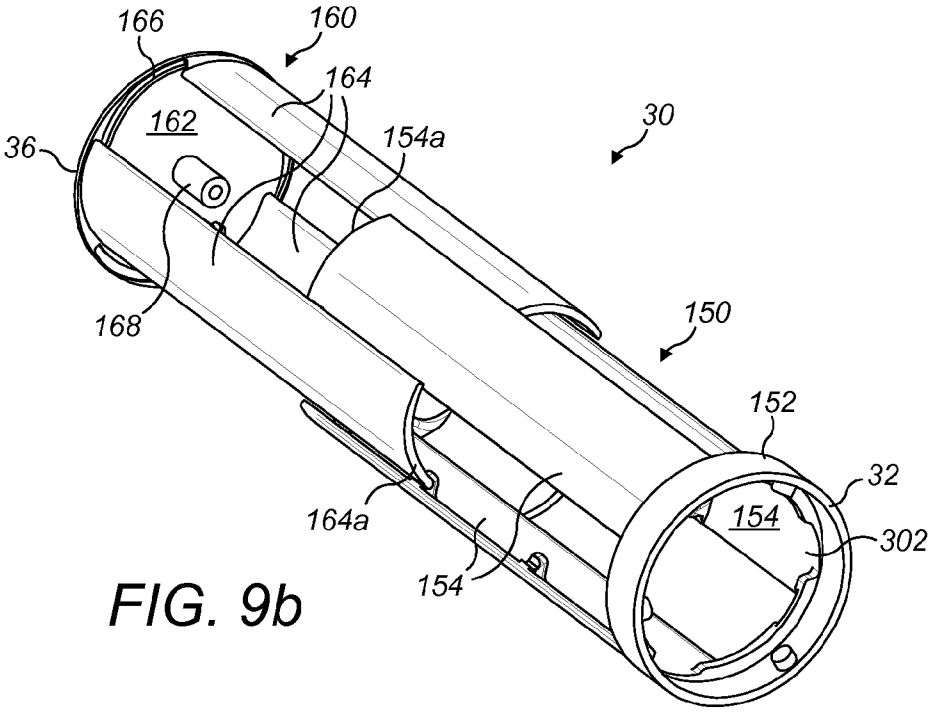
166
160
164
162
30
36
154a
168
150
152
32
164a
154
302
154

FIG. 9b

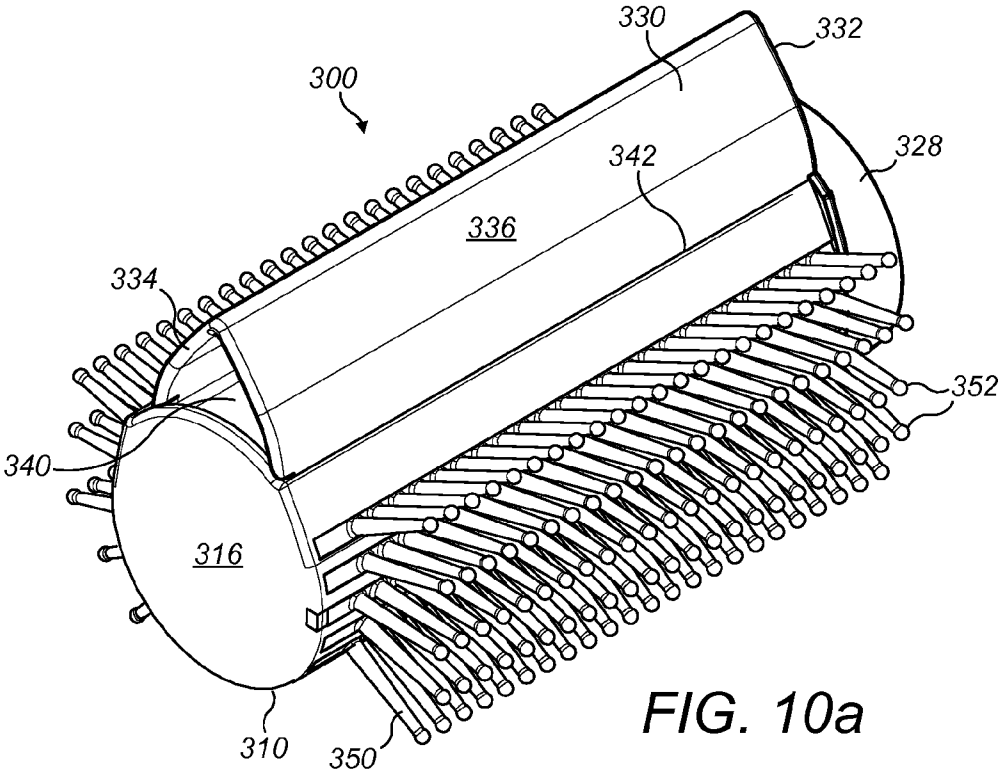

FIG. 10a

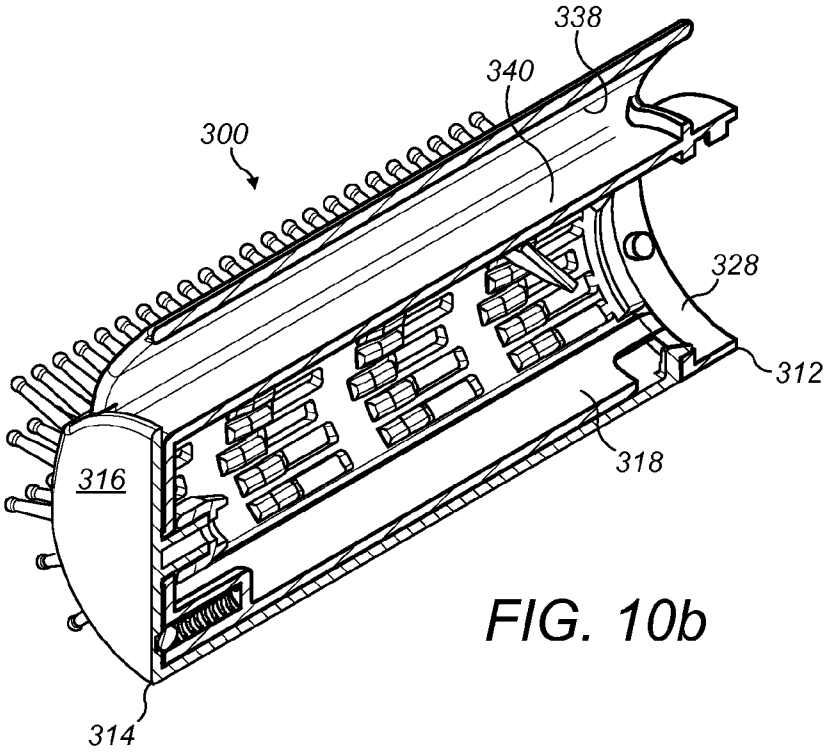

FIG. 10b

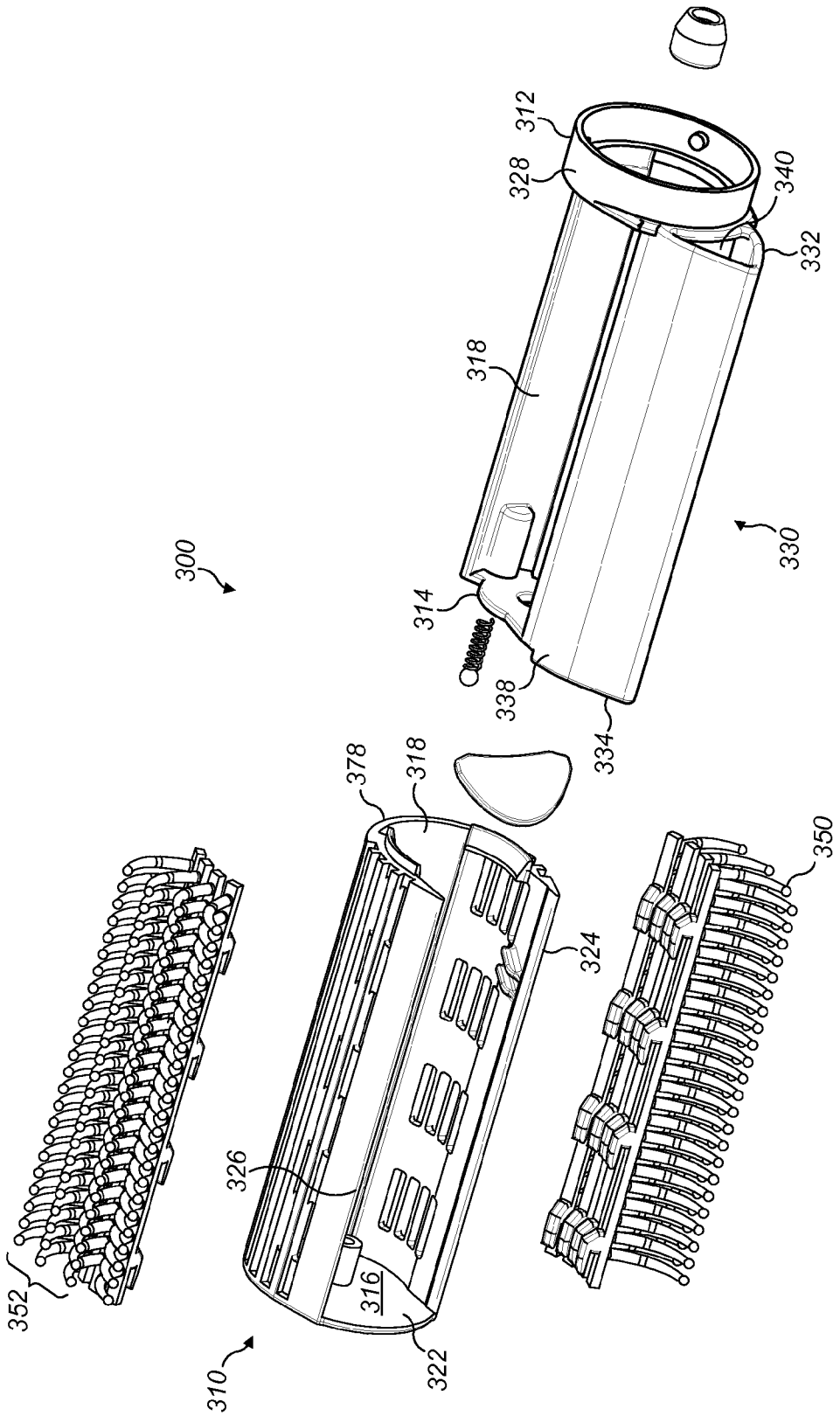
300
310
312
314
316
318
322
324
326
328
330
332
334
338
340
350
352
378

FIG. 11a

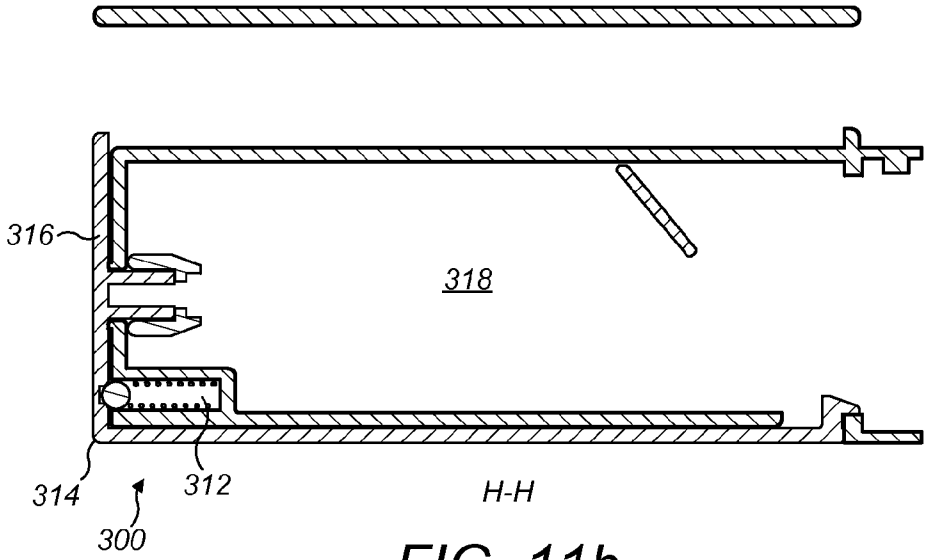

FIG. 11b

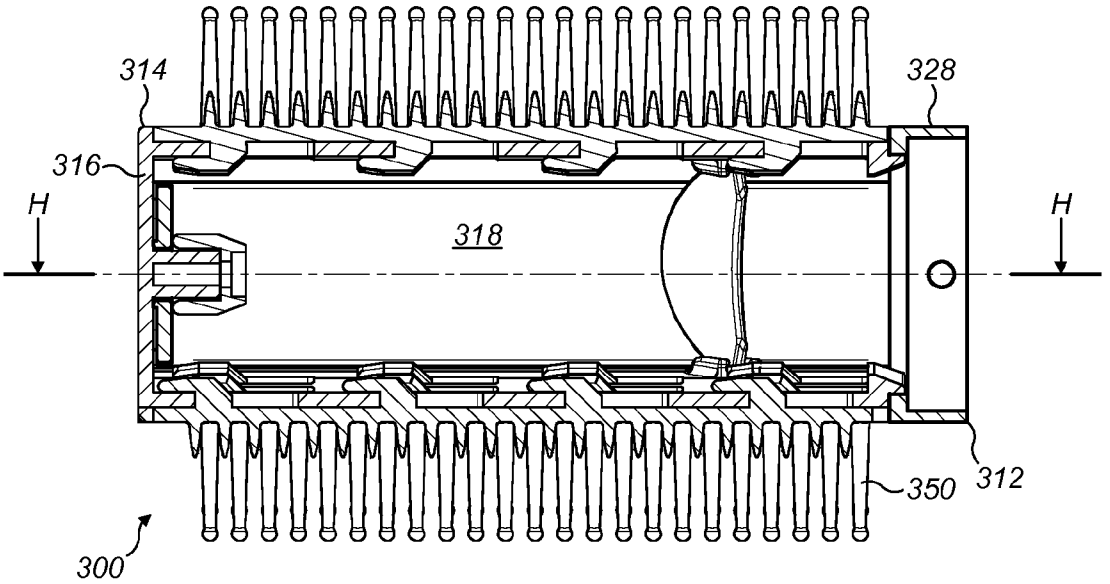

FIG. 11c

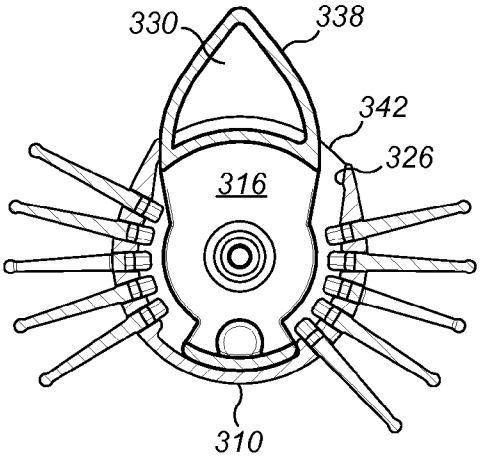

FIG. 12a

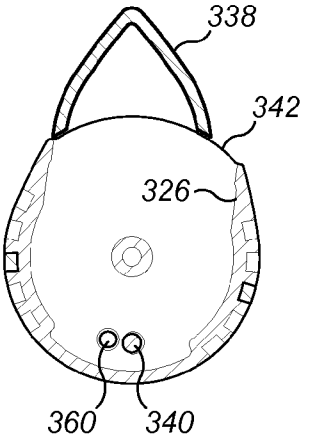

FIG. 12b

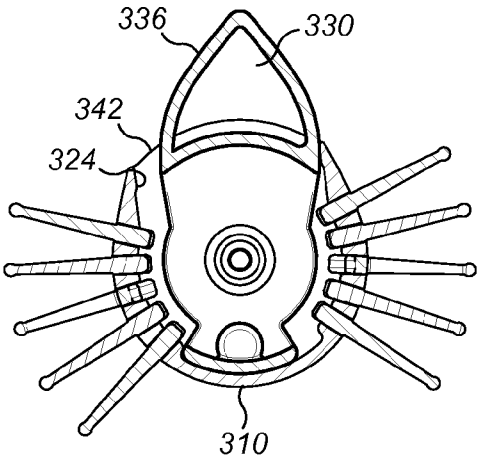

FIG. 13a

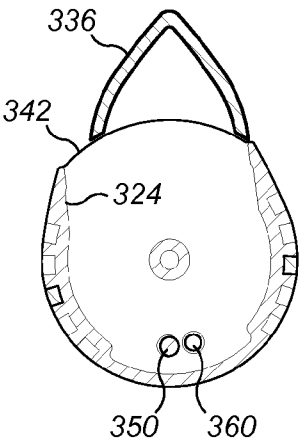

FIG. 13b

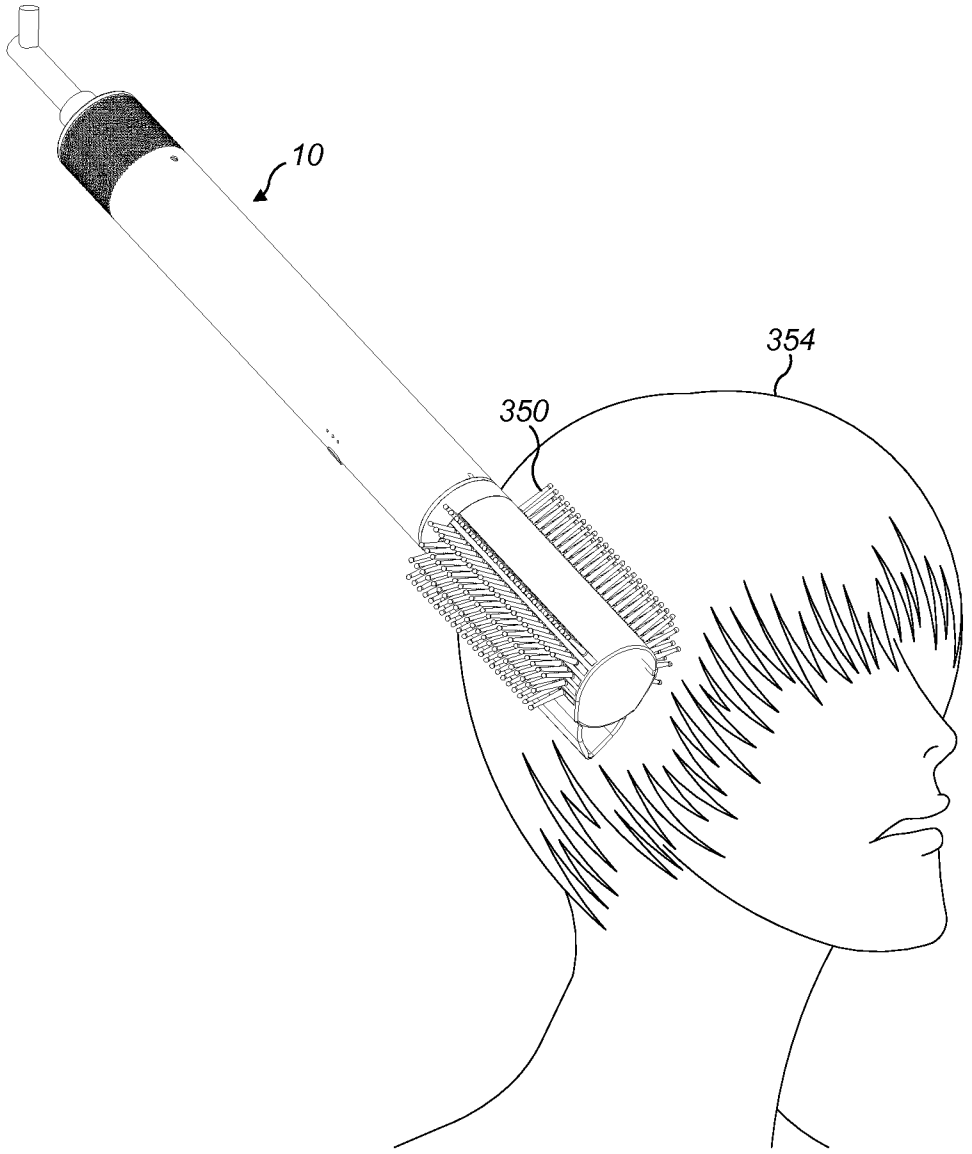

FIG. 14

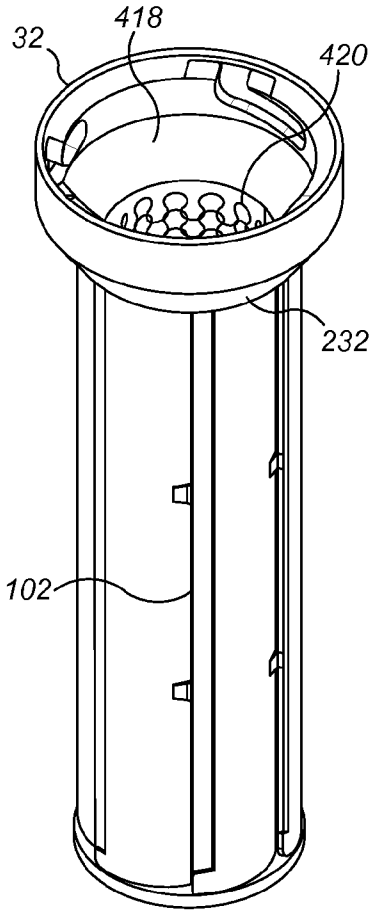

FIG. 15a

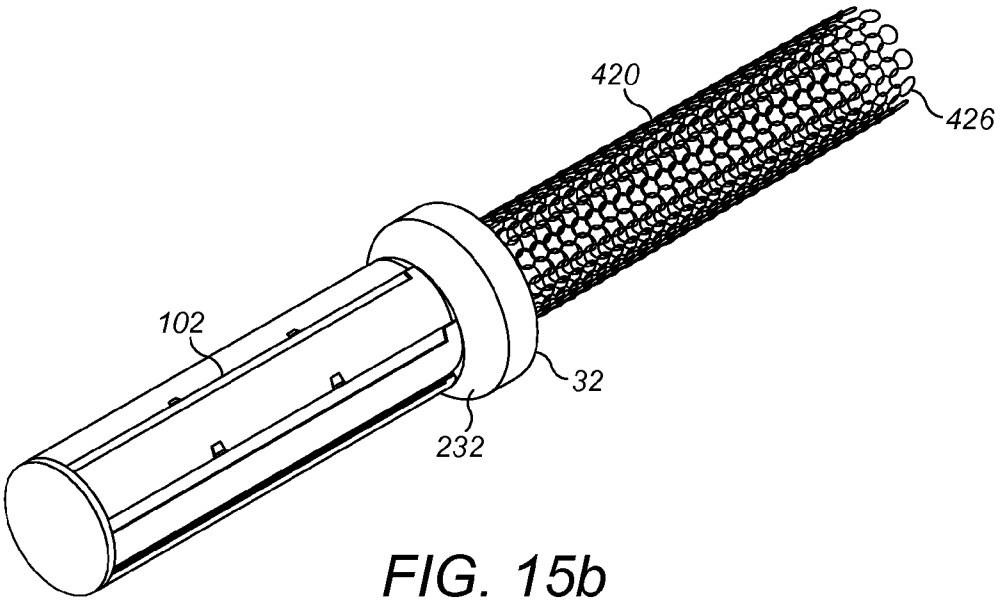

FIG. 15b

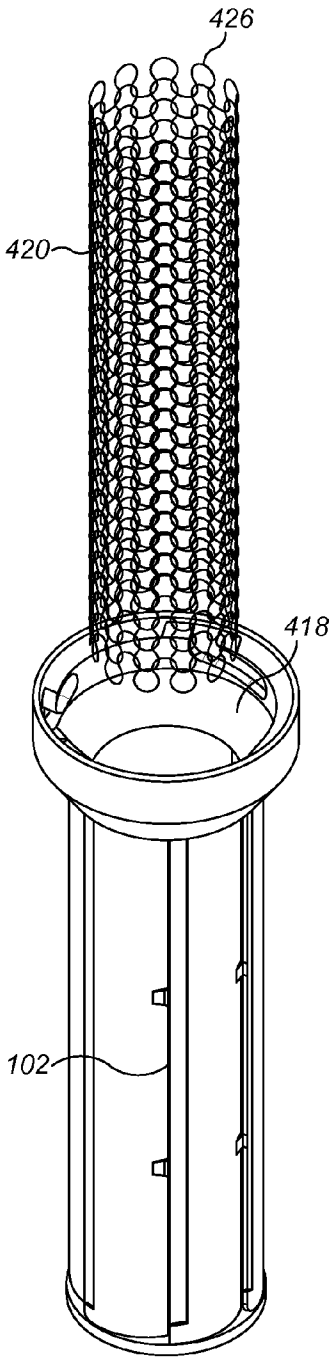

FIG. 15c

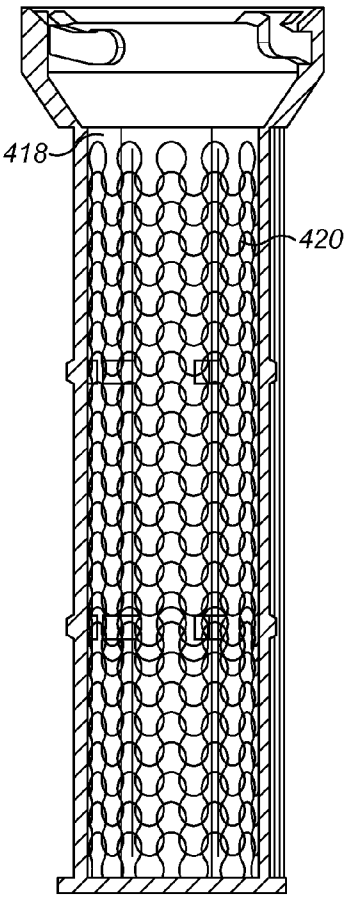

FIG. 15d

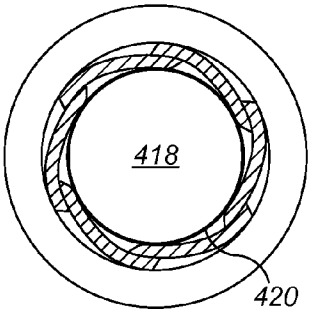

FIG. 15e

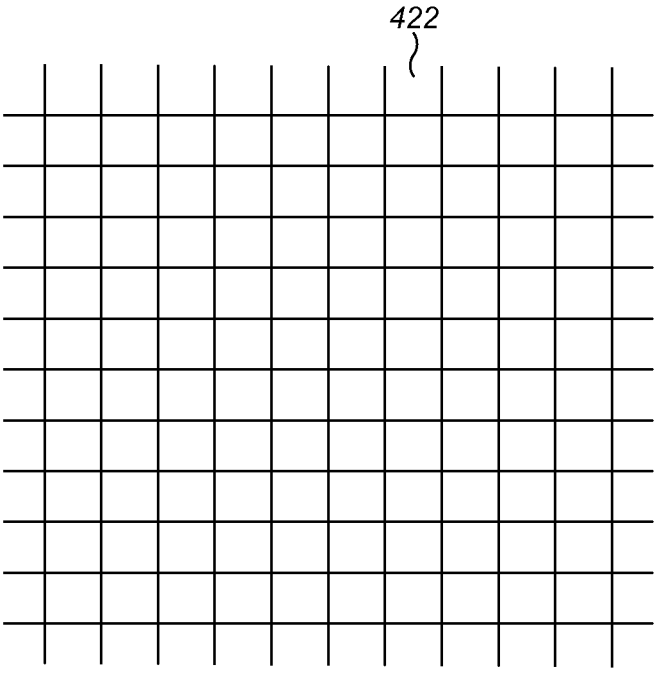

FIG. 16a

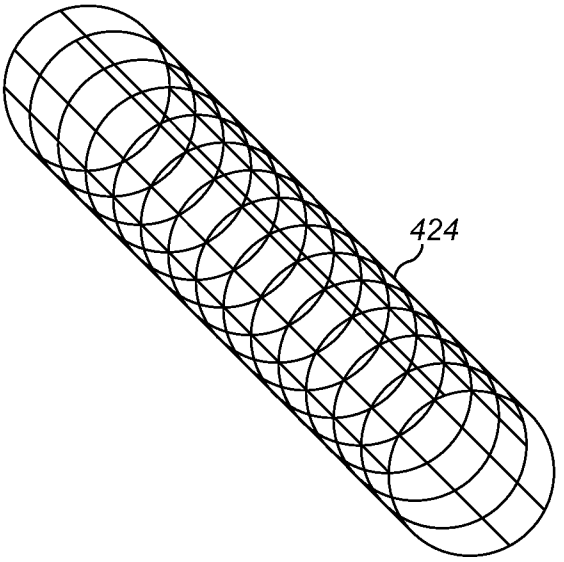

FIG. 16b

ATTACHMENT FOR A HAND HELD APPLIANCE

REFERENCE TO RELATED APPLICATIONS

[0001] This application claims the priority of United Kingdom Application No. 1404986.0, filed Mar. 20, 2014, the entire contents of which are incorporated herein by reference.

FIELD OF THE INVENTION

[0002] This invention relates to an attachment for a hand held appliance, in particular a hair care appliance such as a hot styling brush.

BACKGROUND OF THE INVENTION

[0003] In a conventional hot styling brush, air is sucked into an inlet by a fan unit and directed towards the hair by an attachment or head. Depending on the style desired, the air may or may not be heated. The head or attachment often includes bristles onto which hair is wrapped and held for styling. The air is generally blown out of the head or attachment normal to the surface of the head.

SUMMARY OF THE INVENTION

[0004] The present invention provides an attachment for a hand held appliance comprising a body having a first wall; a second wall; and a slot formed along at least part of the length of the attachment, wherein the slot is defined on a first side by a surface of the first wall and on a second side by a surface of the second wall.

[0005] Preferably, the first wall is generally tubular.

[0006] It is preferred that the surface of the second wall is substantially linear.

[0007] Preferably, the second wall extends out from the first wall. Fluid that exits from the outlet will flow along the second wall and pull hair towards the second wall increasing drying speed and helping to align the individual hair strands.

[0008] It is preferred that the second wall is moveable relative to the first wall. Preferably, the second wall is rotatable with respect to the first wall.

[0009] It is preferred that the second wall is generally triangular.

[0010] Preferably, two slots are provided and the second wall separates the two slots.

[0011] It is preferred that the second wall divides the slot into two. It is preferred that a slot is provided either side of the second wall.

[0012] Alternatively, the slot is formed on one side of the second wall or the other side of the second wall.

[0013] Preferably, the second wall has a first indexed position defining a first slot position.

[0014] It is preferred that the second wall has a second indexed position defining a second slot position.

[0015] Preferably, an indexed position is defined by a detent mechanism. It is preferred that the detent mechanism includes an actuator biased into a recess. Preferably, the actuator is a ball bearing. It is preferred that the actuator is biased by a spring.

[0016] Preferably, an external surface of the attachment includes at least one row of bristles. It is preferred that the external surface is an external surface of the first wall. Preferably, the external surface comprises a first set of bristles comprising at least one row of bristles and a second set of bristles comprising at least one row of bristles.

[0017] It is preferred that the first set of bristles and the second set of bristles are spaced apart on the external surface. Preferably, the external surface is forms at least part of the circumference of a circle and the first set of bristles is radially spaced from the second set of bristles.

[0018] According to a second aspect, the invention provides a hand held appliance comprising a handle having a fluid flow path from a fluid inlet to a fluid outlet and a fan unit for drawing fluid into the fluid inlet and an attachment for attaching to the handle, the attachment comprising a body having a first wall; a second wall; and a slot formed along at least part of the length of the attachment, wherein the slot is defined on a first side by a surface of the first wall and on a second side by a surface of the second wall.

[0019] In one embodiment the appliance is a hair care appliance.

[0020] In another embodiment the appliance is a hot styling appliance such as a hot styling brush.

BRIEF DESCRIPTION OF THE DRAWINGS

[0021] The invention will now be described by example, with reference to the accompanying drawings, of which:

[0022] FIG. **1***a* shows an example of an appliance according to the invention;

[0023] FIG. **1***b* shows a cross section through the appliance shown in FIG. **1***a;*

[0024] FIG. **2***a* shows an exploded view of some of the handle components of the device of FIG. **1***a;*

[0025] FIG. **2***b* shows an enlarged section of the fluid inlet;

[0026] FIGS. **3***a* and **3***b* show an isometric view and an isometric cross section through a first attachment according to the invention;

[0027] FIGS. **4***a* and **4***b* show a side view and a side view cross section through the first attachment;

[0028] FIGS. **5***a* and **5***b* show cross sections through the first attachment;

[0029] FIGS. **6***a* and **6***b* show an isometric view and a side view through a second attachment;

[0030] FIG. **7***a* shows an isometric view through another attachment;

[0031] FIGS. **7***b* and **7***c* show an isometric view and a side view through a further attachment;

[0032] FIG. **8***a* shows an isometric view of a fifth attachment;

[0033] FIG. **8***b* shows an isometric view of a sixth attachment;

[0034] FIGS. **9***a* and **9***b* show isometric views of a two part assembly for an attachment;

[0035] FIGS. **10***a* and **10***b* show an isometric view and an isometric cross section through a further attachment according to the invention;

[0036] FIGS. **11***a*, **11***b* and **11***c* show a side view and a side view cross sections through the further attachment;

[0037] FIGS. **12***a* and **12***b* show cross sections through the further attachment in a first position;

[0038] FIGS. **13***a* and **13***b* show cross sections through the further attachment in a second position;

[0039] FIG. **14** shows schematically the further attachment in use; and

[0040] FIG. **15***a* shows an isometric view of another attachment;

[0041] FIG. **15***b* shows different component parts of the other attachment;

[0042] FIG. **15***c* shows the different component parts from the inlet end;

[0043] FIG. **15***d* shows a cross section through the side of the other attachment;

[0044] FIG. **15***e* shows a cross section through the other attachment; and

[0045] FIGS. **16***a* and **16***b* show an alternative sock for the other attachment.

DETAILED DESCRIPTION OF THE INVENTION

[0046] FIGS. **1***a* and **1***b* shows a hot styling brush **10** with a handle **20** and a detachable head or attachment **30** which is attaches at the distal end **22** of the handle **20** to the fluid inlet **40**.

[0047] The handle **20** has an outer wall **26** which is generally tubular and includes the fluid inlet **40** at and adjacent one end **24**. The fluid inlet **40** comprises a first set of apertures **44** which extend radially around the handle **20** and along the outer wall **26** of the handle from the handle end **24**. The handle end **24** is covered by an end wall **42** which is also perforated with a second set of apertures **46** that extend through the end wall **42** of the handle. Thus, the fluid inlet **40** extends around, along and across the handle **20**. The end wall **42** is orthogonal to the outer wall **26** and an inner wall **60** of the handle.

[0048] The handle **20** also includes a fan unit **70** which comprises a fan and a motor which drives the fan and in use, draws fluid in through the fluid inlet **40**, along a fluid flow path **50** which extends through the length of the handle **20**. The fluid is optionally heater by a heater **80** before entering an inner cavity **38** of the head **30**.

[0049] The head **30** includes a fluid outlet **100** which in this example comprises parallel slots **102** each extending towards a second end **36** of the head and radially around the head **30**. This arrangement enables fluid to exit the head all the way around the head and for the majority of the length of the head **30** maximising a hair styling region of the product.

[0050] In use, hair is wrapped around the head **30** whilst air or fluid exits through the slots **102** drying the hair and/or styling the hair into curls or waves. The hair wraps automatically due to the flow of air around the surface of the head **30**. The air or fluid can be heated but this is not essential.

[0051] Power is provided to the appliance via a power cable **48** which preferably extends from a plug or other power source through the end wall **42** of the handle **20**. The handle **20** also houses a PCB **75** which is electrically connected to the cable **48**, the fan unit **70** and the heater **80** by internal wiring (not shown). An on/off switch **52** and control buttons **54** are provided and connected to the PCB **75** to allow the user to select one of a range of temperature and flow settings.

[0052] FIG. **2***a* shows an exploded view of various parts of the handle **20** in more detail. The handle **20** is tubular and the outer wall **26** of the handle **20** is a cylindrical sleeve made from for example an extruded tube or rolled sheet of metal such as aluminium, an aluminium alloy or a steel. The handle connects to a head **30** at a first end **22** and at the distal, second end **24** a fluid inlet **40** is provided. The fluid inlet **40** is a first means of filtering fluid that enters the fluid flow path **50**.

[0053] The fluid inlet **40** comprises a plurality of apertures extending around, along and across the handle **20**. Having an inlet that extends in three dimensions has advantages particularly when used with hair grooming appliances. Firstly, if the appliance is placed on a surface whilst switched on only a small part of the inlet surface area will be blocked or have restricted flow of fluid into the appliance. This protects the fan unit and particularly the motor of the fan unit from running with too low a flow rate as this can cause overheating of the motor and cause damage to the motor.

[0054] Secondly, often hair care appliances are used with a styling product such as a mousse, gel or spray. These products are typically either applied by a hand or directly to the hair as a mist. After application by a hand, some of the product will be retained on the skin which is then transferred to the appliance when held. This can block at least some of the apertures **44** that extend around and along the handle **20**. However, the apertures **46** that extend under the handle and across the end wall **42** of the handle will be unaffected.

[0055] When a product is applied as a mist, it can settle on the appliance and again block or restrict at least some of the apertures of the fluid inlet **40**. However, by having apertures that extend around, along and across the handle **20** the risk of blocking the fluid inlet **40** is reduced.

[0056] The apertures are preferably circular with a diameter of 0.2 to 1.6 mm. The diameter of the apertures can vary along, around and across the handle **20**. It is advantageous to space the apertures regularly around, along and across the fluid inlet **40**. Not only is this visually pleasing but it also has the technical advantage that there is no weak region of the fluid inlet **40** where blockage of a portion is more likely or would have more impact on the flow into the fluid inlet **40**. The inlet is designed so that the flow into the inlet is even at least around the circumference of the handle **20**.

[0057] A foam block **48** is provided which in use is inserted into the second end **24** of the handle **20**. The foam block **48** is a second means of filtering the fluid that passes through the primary fluid inlet **40** into the primary fluid flow path **50**. It is advantageous that the foam block **48** extends beyond or further towards the first end **22** of the handle than the primary fluid inlet **40** as this ensures that fluid that has entered the primary fluid inlet **40** has passed through the foam block **48** so has had two stages of filtration. In other words, the foam block **48** extends from the second end **24** of the handle **20** past the downstream end **44***a* of the fluid inlet.

[0058] The foam block **48** shown is cylindrical and substantially fills the area within the handle **20** at the primary fluid inlet **40**. This is to ensure that all fluid that enters the primary fluid inlet through first apertures **44** that extend around and along the handle and fluid that enters through second apertures **46** that extend across and through the end wall **42** of the handle **20** passes through this second stage of filtration. The foam block **48** extends longitudinally from the second end **24** of the handle **20** further than the first apertures **42** of the primary fluid inlet **40**.

[0059] The first apertures **44** that extend along and around the outer wall **26** are machined, punched or laser cut from the extruded tube or sheet metal that the outer wall **26** is formed from.

[0060] The handle **20** has an outer wall **26** and an inner wall **60**, the outer wall **26** slides over the inner wall **60** to form the finished product. The inner wall **60** is a duct which surrounds and defines a fluid flow path **50** through the appliance. The outer wall **26** includes a grippable portion and in these examples, includes the fluid inlet **40** into the fluid flow path **50**. An insulting layer of material **28** is provided within the inner wall **60**. The insulating layer is a foam or a felt and insulates the handle from noise produced by the fan unit **70**, heat produced by the operation of the appliance, vibrations caused by the fan unit and noise produced within the appli-

ance by the flow of fluid through the fluid flow path **50**. The insulating layer absorbs energy including airborne noise.

[0061] The inner wall **60** provides a housing **62** in which a fan unit **70** is disposed. The housing **62** is cylindrical and has an inwardly protruding ledge **64**,**66** disposed one at each end of the housing **62** which maintain the position of the fan unit **70** within the handle **20**. The inner wall **60** is made from two parts a first part **60***a* and a second part **60***b* which is moulded separately. This enables easier assembly of the fan unit **70** within the handle **20** than a one piece inner wall. A similar pair of inwardly protruding ledges **68**, **72** maintains the position of the heater **80** within the handle **20**.

[0062] Although the outer wall **26** of the handle **20** has been described as being made from an extruded tube or a rolled sheet of metal, alternatives methods of manufacture and materials could be used; these include, but are not limited to, a plastic extrusion/moulded tube or a composite tube such as carbon fibre reinforced plastic.

[0063] The fluid outlet **100** of the head **30** will now be described in more detail, referring in particular to FIGS. **3***a*, **3***b*, **4***a*, **4***b*, **5***a* and **5***b*. The head **30** is essentially cylindrical and has a first end **32** for connection to a handle **20** and a second end **36** distal to the first end **32**. The head **30** extends longitudinally from the first end **32** to the second end **26** continuing a line described by the handle **20** (FIG. **1***a*) so is approximately the same diameter as the handle. Within the head **30** is an inner cavity **38** and fluid that has been drawn into the fluid flow path **50** within the handle **20** by the fan unit **70** enters the inner cavity **38** via an aperture **302** in the first end **32** of the head **30**.

[0064] The fluid outlet **100** is formed from a number of parallel slots **102** which extend along the length of the head **30** from the first end **32** to the second end **36**. The slots **102** are formed from an overlap **120** (FIG. **5***b*) formed between adjacent plates **110** which results in fluid being directed between a radially inner surface **104** formed from the outer surface **112** of a first plate **110***a* and a radially outer surface **106** formed from the inner surface **114** of a second plate **110***b*. The fluid **122** flowing out of the slot **102** is tangential **130** to the outer surface **112** of the plate **110***a* and joins with the fluid flowing out of the other slots of the fluid outlet **100** forming a fluid flow around the circumference of the head **30**. Thus, the fluid **122** is blown out along the external surface of the head and this encourages hair to wrap around the head **30** automatically.

[0065] The fluid **122** exiting the slots **102** is attracted to the curved surface of the head **30** by the Coanda effect. This in turn causes hair that is presented to the head **30** to automatically wrap around the surface and then styled into curls. As air is blown down the length of the hair, wet hair is dried more quickly than conventionally and as the wrapping process occurs without the use of bristles, the hair can slide off the head **30** once it is dry or styled so there is no tangling.

[0066] To maintain the size of each slot **102**, spacers **108** are provided. In this example, a pair of spacers **108** is provided to maintain each slot **102** size. Each one of the pair of spacers **108** is longitudinally spaced along the slot **102** and the plate **110**. The spacers **108** join adjacent plates **110** together.

[0067] Advantageously, each plate **110** is lined with a felt like material **308** such as Kevlar or wool (see FIG. **3***b*). The material **308** does not extend over each slot **102** so the fluid exiting the fluid outlet **100** does not pass through the layer of material **308**. This layer serves to absorb some of the noise produced by the fluid flowing through the head **30** from the inlet to the head **30** at aperture **302** to the fluid outlet **100**. Such a layer of material **308** is as applicable for other heads herein described such as heads **130**, **180** and **230**.

[0068] FIGS. **6***a* and **6***b* show an alternative head **130**, all features identical to those previously described have the same reference numerals. The head **130** has a larger diameter than the handle **20** so is used to create larger curls. The head **130** has a first end **32** for connection to the handle **20** and this is the same diameter as the handle **20**, within a collar **132** of the head **130**, the diameter of the head **130** increases to the larger diameter prior to the fluid outlet **100** formed by slots **142** and then continues at a constant diameter to the second end **136**. An inner fluid cavity (not shown) is larger than for the head **30** of FIG. **3***a*. In this example the number of plates **110** and slots **102** is the same i.e. six as for the head described with respect to FIG. **3***a*. Alternatively, a larger or smaller number of plates **110** and slots **142** could be used.

[0069] FIG. **7***a* shows a further head **230**. This head **230** has a reduced diameter compared with the handle **20**. The first end **32** is substantially the same diameter as the handle **20** for connection thereto, and then within a collar **232** the diameter of the head **230** decreases to the reduced diameter prior to the fluid outlet **200** formed by slots **202** and continues at a constant diameter to the second end **236**. This head **230** is used to create tighter curls.

[0070] The slots **202** for this head extend longitudinally straight from the first end **32** to the second end **236** as was the case for slots **102** in heads **30**, **130**.

[0071] In another embodiment, as shown in FIGS. **7***b* and **7***c*, a further head **280** has slots **282** which curve around the head **280** forming a spiral or helical pattern around the head **230**. The slots **282** curve by an angle α of 45° from the longitudinal axis A-A of the handle **20** and head **280**. In this example the slots **282** curve in a clockwise direction from the first end **34** of the head **280** towards the second end **236** of the head. The slots **282** are formed as before between adjacent overlapping plates **210** however, in order to form the curved slots **282**, the plates **210** do not extend along the longitudinal axis of the head **280** but also curve by an angle of 45°. Using angled slots changes the profile of the fluid exiting from the head. The airflow exiting from the slots is more normal to the slot when angled slots are used. This has benefits including enabling more hair to be wrapped around the head also, the hair is retained on the head more easily leading to a potentially quicker styling process.

[0072] The slots can be curved in a clockwise or and anti-clockwise direction from the longitudinal axis A-A of the handle **20**. Whilst an angle of 45° has been illustrated, improved wrapping is seen even at an angle of 1°.

[0073] FIG. **8***a* shows a head **180** which is substantially the same diameter as the handle **20**. The slots **182** are curved or spiral around the head **180** in the same manner as head **280**.

[0074] FIG. **8***b* shows a head **380** which has a larger diameter than the handle, and is similar to head **130** except it has curved or spiralling slots **382** around the head **380**.

[0075] FIGS. **9***a* and **9***b* show a way of assembling head **30**. A first part **150** is formed from the first end **32** and has a collar **152** and a first set of plates **154** which are joined to or formed integrally with the collar **152**. A second part **160** is formed from the second end **36** and has an end wall **162** and a second set of plates **164** which are joined to or formed integrally with the end wall **162**. The first set of plates **154** and second set of plates **164** each comprise non-adjacent plates **110** enabling the first part **150** and the second part **160** to be slotted together

to form the head **30**. Between each of the first set of plates **154**, a recess **156** is provided in the connecting ring **152** adapted to accommodate the distal end **164***a* of the second set of plates **164** from the end wall **162**. A similar set of recesses **166** is provided in the end wall **162** and is adapted to accommodate the distal end **154***a* of the first set of plates from the collar **32**.

[0076] In order to retain the first part **150** and the second part **160** of the head **30** in the assembled condition, a protruding screw hole **168** is provided. Near the distal end **154***a* of the first set of plates **154** a support scaffold **170** is provided and this has two functions. A first function is to support the first set of plates **154** and maintain their relative positions towards the distal end **154***a* and a second function is to provide part of the fixing mechanism. In this example, the support scaffold **170** has a central aperture **172** through which the protruding screw hole **168** passes on assembly of the head **30***a* and a screw, for example can be inserted to fix the two parts **150**, **160** of the head together.

[0077] FIGS. **15***a*, **15***b*, **15***c*, **15***d* and **15***e* show a head **400** all features identical to those previously described have the same reference numerals. This head **400** has a reduced diameter compared with the handle **20**. The slots **102** extend longitudinally from the first end **32** to the second end **236**, however the slots could be curved as described with respect to FIGS. **7***a* and **7***b*.

[0078] Internal of the head **400**, within the cavity **418** formed within the head **400**, an internal sock **420** is provided. This sock **420** is a mesh formed from a metal wire. The sock **420** can be in the knitted form **426** shown in FIG. **15***b*. Alternatively as shown in FIGS. **16***a* and **16***b* the sock **420** is a tube **424** formed from a woven mesh **422** having generally square apertures.

[0079] The sock **420** diffuses the fluid flowing in the cavity **418** within the head **400** and slows down the longitudinal velocity of the flow. This results in more even wrapping of hair around the head **400** as the direction of fluid exiting the head **400** is more normal to the slots **102**. The sock **420** extends along the length of the slots **102** within the head **400**. The size of the apertures in the mesh is important; if they are too small the flow becomes too restricted and there is an increased chance of them clogging over time. An aperture size of around 1.6 mm has been found to provide the benefit without undue restriction.

[0080] FIGS. **10***a*, **10***b*, **11***a*-**11***c* and **12** show various views of another head **300** which has a directed fluid flow. The head **300** has a first cylindrical part **310** and a second triangular part **330** that together form the fluid outlet **320**.

[0081] The first cylindrical part **310** has a first end **312** for connection to a handle **20** via a collar **328** and extends longitudinally to a second end **314** which comprises an end wall **316**. An inner cavity **318** is formed within the first cylindrical part **310**. The first cylindrical part **310** has an aperture **322** extending from the collar **328** to the second end **314**. The aperture **322** is defined by a first edge **324** and a second edge **326**.

[0082] The second triangular part **330** has a first end **332** and a second end **334** and if formed from a first side **336**, a second side **338** and an internal wall **340**. The second triangular part **330** fits within the aperture **322** and extends outwardly beyond the first cylindrical part **310**.

[0083] The second triangular part **330** is movable relative to the first cylindrical part **310**. In this example, the second triangular part **330** is fixed with respect to the handle **20** and the first cylindrical part **310** is moveable relative to both the second triangular part **30** and the handle **20**. This enables the outlet slot **342** to be partially defined by one or the other of the first edge **324** and the second edge **326**.

[0084] In one position, referring now to FIGS. **12***a* and **12***b*, the first edge **324** along with a first side **336** of the second triangular part **330** define the limits of the outlet slot **342**. The second triangular part **330** moves with respect to the first cylindrical part **310** so the outlet slot **342** is alternatively defined by the second edge **326** and the second side **338** as shown in FIGS. **13***a* and **13***b*.

[0085] The second triangular part **330** rotates with respect to the first cylindrical part **310** in order to change the position of the outlet slot **342**. The first cylindrical part **310** is temporarily retained in a position by the use of a detent mechanism.

[0086] The end wall **316** of the first cylindrical part **310** includes a first recess **340** and a second recess **350** each of which adapted to partially accommodate a ball bearing **360**. The ball bearing **360** is biased towards the end wall **316** by a spring **362** (see FIG. **11***b*). There are a number of suitable alternatives that could be used instead of this method of retaining one part with respect to the other part such as a plastic bump feature or a piece of sprung metal.

[0087] Referring now to FIGS. **12***a* and **12***b*, when the second triangular part **330** is in a first position with respect to the first cylindrical part **310**, the outlet slot **342** is formed from first side **336** and first edge **324** and the ball bearing **360** is accommodated by the first recess. By manually rotating the second triangular part **330** with respect to the first cylindrical part **310** the force of the spring **362** retaining the ball bearing **360** within the first recess **340** is overcome and the second triangular part **330** can be rotated with respect to the first cylindrical part **310** to move the ball bearing **360** into the second recess **350** and changing the position of the outlet slot **328** so it is now formed from the second edge **326** and the second side **338**.

[0088] The first cylindrical part **310** includes bristles **350** arranged in this example in parallel rows **352** on either side of the aperture **322**. The rows **352** of bristles **350** extend from near the outlet slot **342** around the head **300** but in this example the bristles **350** do not extend all the way around the head **300**, there is a gap in the rows **352** diametrically opposite the outlet slot **320**.

[0089] Referring now to FIG. **14**, when hair **354** is being styled, the action of drawing the bristles **350** down through the hair **354** opens the outlet slot **342** on the side next to the hair **354**. The position of the outlet slot **342** is movable by hand or by the friction or force of combing through the hair.

[0090] The use of a combination of a directed outlet slot **342** and bristles **350** means that the hair is dried and/or styled more quickly than conventionally as the fluid exiting from the outlet slot **342** is blown down the hair **354**. The fluid exiting the outlet slot **342** is attracted to the surface of the second triangular part **330** which in turn attracts the hair **354** to the second triangular part **330**. The bristles **350** separate and detangle individual strands of the hair **354** and this combination gives fast drying and a smother result.

[0091] In use as shown in FIG. **14**, this head is designed to be pulled through the hair with the slot **328** adjacent the hair **354**. Fluid is blown out of the slot **328** as the appliance is moved along the hair **354** so the hair is both heated and brushed. Having the slot **328** on either side of the head **356** means that the same head **300** can be used for both sides of the head and both the underside and the topside of the hair **354**.

[0092] In each of the examples given, the head **30**, **130**, **180**, **230**, **300** in connected to handle **20** via a collar and a twist lock joint. Referring to FIG. **7***b*, three protrusions **234** are provided on the internal surface of the collar **232** (one not shown). The protrusions **234** are adapted to engage a slot **90** (see FIG. **1***b*) or three separate slots provided near the distal end **22** of the handle **20**. The slot **90** extends at least partially around an outer surface of the inner wall **60** and is helical so both a rotational and longitudinal movement is required to attach or remove the head from the handle **20**. This is one example of a fixing mechanism, it will be apparent to the skilled person that other equally acceptable alternative mechanisms could be used.

[0093] The heads **30**, **130**, **180** and **230** described with respect to FIGS. **3***a* to **9***b* could be provided with bristles. For these heads **30**, **130**, **180** and **230** as the slots are arranged all the way around the head, any bristles would be arranged all the way around the head. An example would be to have one or more rows of bristles at least located on every other plate **110**, **210**.

[0094] The invention has been described in detail with respect to a hot styling brush however, it is applicable to any appliance that draws in a fluid and directs the outflow of that fluid from the appliance including a hairdryer.

[0095] The appliance can be used with or without a heater; the action of the outflow of fluid at high velocity has a drying effect.

[0096] The heads have been described as being manufactured by attaching a first part to the second part using a screw however, as the skilled person will be aware, a number of different fixing methods can be used such as, but not limited to gluing or using ultrasonic welding.

[0097] The fluid that flows through the appliance is generally air, but may be a different combination of gases or gas and can include additives to improve performance of the appliance or the impact the appliance has on an object the output is directed at for example, hair and the styling of that hair. Such additives include but are not limited to hairspray and serums for example.

[0098] The heads **30**, **130**, **230** are all generally cylindrical in shape, however as the skilled person would realise, alternative shapes could be used such as ovals.

[0099] The invention is not limited to the detailed description given above. Variations will be apparent to the person skilled in the art.

1. An attachment for a hand held appliance comprising a body having a first wall; a second wall; and a slot formed along at least part of the length of the attachment, wherein the slot is defined on a first side by a surface of the first wall and on a second side by a surface of the second wall wherein the second wall is moveable relative to the first wall.

2. The attachment of claim **1**, wherein the second wall is rotatable with respect to the first wall.

3. The attachment of claim **1**, wherein the second wall extends out from the first wall.

4. The attachment of claim **1**, wherein two slots are provided and the second wall separates the two slots.

5. The attachment of claim **4**, wherein the second wall divides the slot into two.

6. The attachment of claim **1**, wherein the slot is formed on one side of the second wall or the other side of the second wall.

7. The attachment of claim **6**, wherein a slot is provided either side of the second wall.

8. The attachment of claim **1**, wherein the second wall has a first indexed position defining a first slot position.

9. The attachment of claim **1**, wherein the second wall has a second indexed position defining a second slot position.

10. The attachment of claim **8**, wherein a first or second indexed position is defined by a detent mechanism.

11. The attachment of claim **10**, wherein the detent mechanism includes an actuator biased into a recess.

12. The attachment of claim **11**, wherein the actuator is a ball bearing.

13. The attachment of claim **11**, wherein the actuator is biased by a spring.

14. The attachment of claim **1**, wherein an external surface of the attachment includes at least one row of bristles.

15. The attachment of claim **14**, wherein the external surface is an external surface of the first wall.

16. A hand held appliance comprising a handle having a fluid flow path from a fluid inlet to a fluid outlet and a fan unit for drawing fluid into the fluid inlet and an attachment for attaching to the handle, the attachment comprising a body having a first wall; a second wall; and a slot formed along at least part of the length of the attachment, wherein the slot is defined on a first side by a surface of the first wall and on a second side by a surface of the second wall wherein the second wall is moveable relative to the first wall.

17. The appliance of claim **16**, wherein the second wall is rotatable with respect to the first wall.

18. The appliance of claim **16**, wherein the second wall extends out from the first wall.

19. The appliance of claim **16**, wherein two slots are provided and the second wall separates the two slots.

20. The appliance of claim **19**, wherein the second wall divides the slot into two.

21. The appliance of claim **16**, wherein the slot is formed on one side of the second wall or the other side of the second wall.

22. The appliance of claim **19**, wherein a slot is provided either side of the second wall.

23. The appliance of claim **16**, wherein the second wall has a first indexed position defining a first slot position.

24. The appliance of claim **16**, wherein the second wall has a second indexed position defining a second slot position.

25. The appliance of claim **23**, wherein an indexed position is defined by a detent mechanism.

26. The appliance of claim **25**, wherein the detent mechanism includes an actuator biased into a recess.

27. The appliance of claim **26**, wherein the actuator is a ball bearing.

28. The appliance of claim **26**, wherein the actuator is biased by a spring.

29. The appliance of claim **16**, wherein an external surface of the attachment includes at least one row of bristles.

30. The appliance of claim **29**, wherein the external surface is an external surface of the first wall.

31. The appliance of claim **16**, wherein the appliance is a hair care appliance.

32. The appliance of claim **16**, wherein the appliance is a hot styling appliance.

* * * * *