UNITED STATES PATENT AND TRADEMARK OFFICE

BEFORE THE PATENT TRIAL AND APPEAL BOARD

SHARKNINJA, INC., SHARKNINJA OPERATING LLC,
SHARKNINJA MANAGEMENT LLC, AND
SHARKNINJA SALES COMPANY,
Petitioners,

v.

DYSON TECHNOLOGY LIMITED,
Patent Owner.

Case No. IPR2024-00219
U.S. Patent No. 11,589,660

Petition for *Inter Partes* Review of U.S. Patent No. 11,589,660

Mail Stop **PATENT BOARD**
Patent Trial and Appeal Board
U.S. Patent and Trademark Office
P.O. Box 1450
Alexandria, VA 22313-1450

TABLE OF CONTENTS

Page

PETITIONER'S EXHIBIT LIST x

MANDATORY NOTICES xi

A. Real Parties-in-Interest [37 C.F.R. § 42.8(b)(1)] xi

B. Related Matters [37 C.F.R. § 42.8(b)(2)] xi

C. Lead and Back-Up Counsel [37 C.F.R. § 42.8(b)(3)] xi

D. Service Information [37 C.F.R. § 42.8(b)(4)] xiii

I. INTRODUCTION 1

II. REQUIREMENTS OF *INTER PARTES* REVIEW 2

A. Standing 2

B. Identification of Challenge and Relief Requested 3

1. U.S. Patent No. 4,943,182 (Ex. 1004) 4

2. EP 0 791 758 A1 (Ex. 1005) 4

3. U.S. Patent Publication No. 2015/0265022 (Ex. 1007) 4

4. U.S. Patent No. 6,161,244 (Ex. 1008) 5

C. How the Challenged Claims Are To Be Construed Under 37 C.F.R. § 42.104(b)(3) 5

D. How the Challenged Claims Are Unpatentable Under 37 C.F.R. § 42.104(b)(4) 5

E. Supporting Evidence Under 37 C.F.R. § 42.104(b)(5) 6

F. Payment of Fees 6

III. TECHNICAL BACKGROUND 6

A. Summary of the Alleged Invention of the '660 Patent 6

TABLE OF CONTENTS *(continued)*

Page

B. Summary of the Relevant Prosecution History of the ’660 Patent 8

C. Person of Ordinary Skill in the Art 10

IV. GROUNDS OF UNPATENTABILITY 10

A. Ground 1: Hoblingre Anticipates Claims 1-9, 15, 23-24, and 32 10

1. Overview of Ground 10

a. Summary of Hoblingre 11

2. Detailed Analysis of Ground 1 12

a. Element 1[pre]: “A handheld appliance” 12

b. Element 1[a] “having a body and an attachment” 14

c. Element 1[b] “the body comprising an attachment mechanism having a first slot and an actuator” 17

d. Element 1[c] “the attachment comprising a first protrusion configured to engage with the first slot” 19

e. Element 1[d] “wherein the actuator has a first position and a second position and the actuator is slidably moved from the first position towards the second position in a longitudinal direction of the body as the first protrusion engages with the first slot” 21

f. Element 1[e] “wherein the body extends along a longitudinal axis and the first slot extends both radially around and axially along the body.” 24

g. Claim 2: “The appliance of claim 1, wherein in the first position, the actuator at least partially obscures the first slot.” 25

h. Claim 3: “The appliance of claim 1, wherein the actuator comprises a surface which interacts with the first

TABLE OF CONTENTS *(continued)*

Page

protrusion when the first protrusion engages with the first slot.” 26

i. Claim 4: “The appliance of claim 3, wherein the surface is configured to at least partially define the first slot at or near the second position.” 27

j. Claim 5: “The appliance of claim 3, wherein the first protrusion comprises a first face for engagement with the actuator.” 28

k. Claim 6: “The appliance of claim 5, wherein the first face engages with the surface of the actuator.” 29

l. Claim 7: “The appliance of claim 1, wherein when the first protrusion is at a predetermined position within the first slot, the actuator returns towards the first position.” 30

m. Claim 8: “The appliance of claim 7, wherein the actuator retains the attachment on the body.” 31

n. Claim 9: “The appliance of claim 1, wherein the actuator is biased into the first position.” 31

o. Claim 15: “The appliance of claim 1, wherein the body has a first end and a second end and the attachment mechanism is adjacent the second end.” 32

p. Claim 23: “The appliance of claim 1, comprising a second protrusion and a second slot.” 33

q. Claim 24: “The appliance of claim 23, wherein the second protrusion and second slot are radially spaced from the first protrusion and the first slot.” 34

r. Claim 32: “The appliance of claim 1, wherein the first slot causes the attachment to pivot relative to the body as the first protrusion engages with the first slot.” 35

TABLE OF CONTENTS *(continued)*

Page

B. Ground 2: Hoblingre in View of Maclaine Renders Obvious Claims 1-9, 15, 18, 23-24, and 30-32 35

1. Overview of Ground 35

a. Summary of Maclaine 36

b. Motivation to Combine Hoblingre and Maclaine 40

2. Detailed Analysis of Ground 2 43

a. Element 1[pre]: "A handheld appliance" 43

b. Claim 15: "The appliance of claim 1, wherein the body has a first end and a second end and the attachment mechanism is adjacent the second end." 44

c. Claim 18: "The appliance of claim 1, wherein the attachment comprises a collar extending around the attachment and the first protrusion extends from the collar." 45

d. Claim 30: "The appliance of claim 1, wherein the appliance is a hair care appliance." 48

e. Claim 31: "The appliance of claim 30, wherein the hair care appliance is a hot styling appliance." 49

C. Ground 3: Hoblingre in View of Maclaine and Jeannet Renders Obvious Claims 1-9, 15, 18, 23-24 and 30-34 49

1. Overview of Ground 49

a. Summary of Jeannet 50

b. Motivation to Combine Hoblingre, Maclaine, and Jeannet 52

2. Detailed Analysis of Ground 3 53

a. Element 33[pre]: "A handheld appliance" 53

TABLE OF CONTENTS *(continued)*

Page

b. Element 33[a]: "having a body and an attachment".....53

c. Element 33[b]: "the body comprising an attachment mechanism having a first slot and an actuator".....54

d. Element 33[c]: "the attachment comprising a first protrusion configured to engage with the first slot".....54

e. Element 33[d]: "wherein the actuator has a first position and a second position and the actuator is slidably moved from the first position towards the second position in a longitudinal direction of the body as the first protrusion engages with the first slot" 54

f. Element 33[e]: "further comprising a user operated button which engages with the actuator.".....54

g. Claim 34: "The appliance of claim 33, wherein actuation of the button moves the actuator from the first position to the second position to facilitate removal of an attachment from the body.".....58

D. Ground 4: Mouhot Anticipates Claims 1-9, 15, 23-24, and 32.....59

1. Overview of Ground 60

a. Summary of Mouhot.....60

2. Detailed Analysis of Ground 4 60

a. Element 1[pre]: "A handheld appliance" 60

b. Element 1[a] "having a body and an attachment".....61

c. Element 1[b] "the body comprising an attachment mechanism having a first slot and an actuator".....62

d. Element 1[c] "the attachment comprising a first protrusion configured to engage with the first slot".....66

TABLE OF CONTENTS *(continued)*

Page

e. Element 1[d] "wherein the actuator has a first position and a second position and the actuator is slidably moved from the first position towards the second position in a longitudinal direction of the body as the first protrusion engages with the first slot" 68

f. Element 1[e] "wherein the body extends along a longitudinal axis and the first slot extends both radially around and axially along the body." 70

g. Claim 2: "The appliance of claim 1, wherein in the first position, the actuator at least partially obscures the first slot." 72

h. Claim 3: "The appliance of claim 1, wherein the actuator comprises a surface which interacts with the first protrusion when the first protrusion engages with the first slot." 73

i. Claim 4: "The appliance of claim 3, wherein the surface is configured to at least partially define the first slot at or near the second position." 74

j. Claim 5: "The appliance of claim 3, wherein the first protrusion comprises a first face for engagement with the actuator." 75

k. Claim 6: "The appliance of claim 5, wherein the first face engages with the surface of the actuator." 78

l. Claim 7: "The appliance of claim 1, wherein when the first protrusion is at a predetermined position within the first slot, the actuator returns towards the first position." 78

m. Claim 8: "The appliance of claim 7, wherein the actuator retains the attachment on the body." 81

TABLE OF CONTENTS *(continued)*

Page

n. Claim 9: "The appliance of claim 1, wherein the actuator is biased into the first position." 82

o. Claim 15: "The appliance of claim 1, wherein the body has a first end and a second end and the attachment mechanism is adjacent the second end." 84

p. Claim 23: "The appliance of claim 1, comprising a second protrusion and a second slot." 85

q. Claim 24: "The appliance of claim 23, wherein the second protrusion and second slot are radially spaced from the first protrusion and the first slot." 86

r. Claim 32: "The appliance of claim 1, wherein the first slot causes the attachment to pivot relative to the body as the first protrusion engages with the first slot." 87

E. Ground 5: Mouhot in View of Maclaine Renders Obvious Claims 1-9, 15, 18, 23-24, and 30-32.....88

1. Overview of Ground 88

a. Motivation to Combine Mouhot and Maclaine 88

2. Detailed Analysis of Ground 5 91

a. Element 1[pre]: "A handheld appliance" 91

b. Claim 15: "The appliance of claim 1, wherein the body has a first end and a second end and the attachment mechanism is adjacent the second end." 91

c. Claim 18: "The appliance of claim 1, wherein the attachment comprises a collar extending around the attachment and the first protrusion extends from the collar." 91

d. Claim 30: "The appliance of claim 1, wherein the appliance is a hair care appliance." 93

TABLE OF CONTENTS *(continued)*

Page

e. Claim 31: "The appliance of claim 30, wherein the hair care appliance is a hot styling appliance."....94

F. Ground 6: Mouhot in View of Maclaine and Jeannet Renders Obvious Claims 1-9, 15, 18, 23-24 and 30-34....94

1. Overview of Ground....94

a. Motivation to Combine Mouhot, Maclaine, and Jeannet....95

2. Detailed Analysis of Ground 6....96

a. Element 33[pre]: "A handheld appliance"....96

b. Element 33[a]: "having a body and an attachment"....96

c. Element 33[b]: "the body comprising an attachment mechanism having a first slot and an actuator"....97

d. Element 33[c]: "the attachment comprising a first protrusion configured to engage with the first slot"....97

e. Element 33[d]: "wherein the actuator has a first position and a second position and the actuator is slidably moved from the first position towards the second position in a longitudinal direction of the body as the first protrusion engages with the first slot"....97

f. Element 33[e]: "further comprising a user operated button which engages with the actuator."....97

g. Claim 34: "The appliance of claim 33, wherein actuation of the button moves the actuator from the first position to the second position to facilitate removal of an attachment from the body."....100

V. ENABLEMENT AND SECONDARY CONSIDERATIONS....100

VI. PTAB DISCRETION SHOULD NOT PRECLUDE INSTITUTION....101

TABLE OF CONTENTS *(continued)*

Page

A. Discretionary Denial Under § 314(a) Is Not Warranted 101

B. Discretionary Denial Under § 325(d) Is Not Warranted 102

VII. CONCLUSION 102

APPENDIX: CHALLENGED CLAIM LISTING 106

PETITIONER'S EXHIBIT LIST

Exhibit No.	Description
1001	U.S. Patent No. 11,589,660
1002	File History for U.S. Patent No. 11,589,660
1003	Declaration of Dr. Nosenchuck
1004	U.S. Patent No. 4,943,182 ("Hoblingre")
1005	Certified Translation of European Patent Application No. EP0791758 ("Mouhot")
1006	European Patent Application No. EP0791758 ("Mouhot")
1007	U.S. Patent Application Publication No. 2015/0265022 ("Maclaine")
1008	U.S. Patent No. 6,161,244 ("Jeannet")
1009	U.S. Patent No. 5,715,847 ("Rolf")
1010	U.S. Patent No. 7,876,373 ("Ochi")

MANDATORY NOTICES

A. Real Parties-in-Interest [37 C.F.R. § 42.8(b)(1)]

The real parties-in-interest are Petitioners SharkNinja, Inc., SharkNinja Operating LLC, SharkNinja Management LLC, and SharkNinja Sales Company (collectively, "Petitioners" or "SharkNinja"). Petitioners further identify SharkNinja Midco LLC, SharkNinja Appliance LLC, SharkNinja Appliance UK Holdco Limited, and SharkNinja Global SPV, Ltd. as real-parties-in-interest out of an abundance of caution. No entity not named above is funding, controlling, or directing this Petition, or otherwise has had an opportunity to control or direct this Petition or Petitioners' participation in any resulting *inter partes* review (IPR).

B. Related Matters [37 C.F.R. § 42.8(b)(2)]

Petitioners previously filed a Petition for *Inter Partes Review*, IPR2023-01323, on August 18, 2023, and have moved to withdraw IPR2023-01323 on October 11, 2023. The Board granted termination of that petition on November 28, 2023. There are no other judicial or administrative matters that would affect, or be affected by, a decision in this proceeding.

C. Lead and Back-Up Counsel [37 C.F.R. § 42.8(b)(3)]

Pursuant to 37 C.F.R. §§ 42.8(b)(3), 42.8(b)(4), and 42.10(a), Petitioners provide the following designation of counsel:

Lead Counsel for Petitioners	Back-up Counsel for Petitioners
Brian M. Buroker (Reg. No. 39,125) Gibson, Dunn & Crutcher LLP 1050 Connecticut Ave. NW Washington, DC 20036 Phone: (202) 955-8500 Fax: (202) 467-0539 Email: bburoker@gibsondunn.com	Brian Rosenthal (*pro hac vice* forthcoming) Gibson, Dunn & Crutcher LLP 200 Park Avenue New York, NY 10166 Phone: (212) 351-2339 Email: brosenthal@gibsondunn.com Nathan Curtis (Reg. No. 70,471) Gibson, Dunn & Crutcher LLP 2001 Ross Avenue Suite 2100 Dallas, TX 75201 Phone: (214) 698-3423 Fax: (214) 571-2961 Email: ncurtis@gibsondunn.com Shuo Josh Zhang (Reg. No. 71,774) Gibson, Dunn & Crutcher LLP 1050 Connecticut Ave. NW Washington, DC 20036 Phone: (202) 955-8270 Fax: (202) 831-6073 Email: szhang@gibsondunn.com Vivian Lu (Reg. No. 74,443) Gibson, Dunn & Crutcher LLP 200 Park Avenue New York, NY 10166 Phone: (212) 351-3837 Email: vlu@gibsondunn.com

A Power of Attorney accompanies this Petition in accordance with 37 C.F.R. § 42.10(b).

D. Service Information [37 C.F.R. § 42.8(b)(4)]

Service via hand delivery or postal mail may be made at the address of the lead and back-up counsel above. Petitioners hereby consent to electronic service, and service by electronic mail may be made at the following email address:

- GDC-SharkNinjaIPRD@gibsondunn.com

I. INTRODUCTION

Pursuant to 35 U.S.C. § 311, Petitioners hereby petition for *inter partes* review of U.S. Patent No. 11,589,660 ("the '660 patent") (Ex. 1001) and seek cancellation of claims 1-9, 15, 18, 23, 24, and 30-34 ("Challenged Claims") as unpatentable under 35 U.S.C. §§ 102 and 103.

The '660 patent relates to the connection mechanism between an appliance, specifically a handheld hair care appliance such as "a hot styling device," and an attachment. Ex. 1001, 1:11-13. The '660 patent seeks "to provide a solid connection between the attachment and the appliance" when in use, while allowing the attachment to be "easily removable." *Id.*, 1:29-30. The sole alleged improvement is "a curved slot" which is allegedly "advantageous over a traditional bayonet fitting." *Id.*, 7:18-37. The curved slot allows the connection to be made by "push[ing] the attachment 20 onto the body 210 a relatively short amount" after which point "the actuator 50 completes the movement." *Id.* That connection mechanism, including the curved slot, is the focus of the Challenged Claims.

This single alleged advance, however, was not new. Indeed, bayonet-type couplings were "well known and employed in many fields," and had been in use and patented for decades prior to the earliest possible priority date of the '660 patent. Ex. 1004, 1:13-14; Ex. 1003, ¶24. For example, Hoblingre issued in 1990 and discloses a bayonet fastener with curved slots precisely the same as those claimed in the '660 patent. Hoblingre's fastener allows a connection to be made through "a

simple axial force, the angular displacement occurring automatically under the effect of the exerted pressure" due to the shape of its helical slot. Ex. 1004, 2:58-3:36. Mouhot also disclosed the allegedly novel attachment mechanism in 1997.[1] Furthermore, the use of such bayonet couplings in various handheld appliances was disclosed in Maclaine and Jeannet.

As explained in detail below, each of the Challenged Claims of the '660 patent is anticipated by Hoblingre or Mouhot and/or rendered obvious by Hoblingre or Mouhot in view of Maclaine alone or with Jeannet. None of those references were part of the original prosecution. The Board should institute IPR to invalidate the Challenged Claims of this patent, which never should have issued.

II. REQUIREMENTS OF *INTER PARTES* REVIEW

A. Standing

Pursuant to 37 C.F.R. § 42.104(a), Petitioners certify that the '660 patent is available for IPR and that Petitioners are not barred or estopped from requesting an IPR on the grounds identified herein.

---

[1] Ex. 1005 is the certified English-language translation of EP0791758 to Mouhot. Ex. 1006 is the original French application.

B. Identification of Challenge and Relief Requested

Pursuant to 37 C.F.R. § 42.104(b), Petitioners request that the Board institute IPR of claims 1–9, 15, 18, 23-24, 30-34 of the ’660 patent under AIA 35 U.S.C. §§ 102 and 103.

The ’660 patent issued from an application filed August 29, 2017, which purports to claim priority to GB 1614825, filed September 1, 2016. For purposes of this Petition only, Petitioners assume the Challenged Claims are entitled to a priority date of September 1, 2016. Ex. 1003, ¶42.

The precise relief requested by Petitioners is that claims 1–9, 15, 18, 23-24, and 30-34 be cancelled based on the grounds below:

Ground	Claims	Basis for Rejection[2]
1	1-9, 15, 23-24 and 32	Anticipation over Hoblingre
2	1-9, 15, 18, 23-24 and 30-32	Obviousness over Hoblingre and Maclaine
3	1-9, 15, 18, 23-24 and 30-34	Obviousness over Hoblingre, Maclaine, and Jeannet
4	1-9, 15, 23-24, 32	Anticipation over Mouhot

[2] All obviousness grounds include the knowledge of a POSITA.

Ground	Claims	Basis for Rejection[2]
5	1-9, 15, 18, 2-24 and 30-32	Obviousness over Mouhot and Maclaine
6	1-9, 15, 18, 23-2424 and 30-34	Obviousness over Mouhot, Maclaine, and Jeannet

The above challenges are made in view of the following prior art references:

1. U.S. Patent No. 4,943,182 (Ex. 1004)

U.S. Patent No. 4,943,182 ("Hoblingre"), titled "Rapid fastener of the bayonet type," issued on July 24, 1990. Hoblingre therefore qualifies as prior art to the '660 patent under AIA 35 U.S.C. § 102(a)(1). Hoblingre was not cited or discussed during prosecution of the '660 patent.

2. EP 0 791 758 A1 (Ex. 1005)

EP 0 791 758 A1 ("Mouhot"), titled "Bayonet-type quick coupler," published on August 27, 1997. Mouhot therefore qualifies as prior art to the '660 patent under AIA 35 U.S.C. § 102(a)(1). Mouhot was not cited or discussed during prosecution of the '660 patent.

3. U.S. Patent Publication No. 2015/0265022 (Ex. 1007)

U.S. Patent Publication No. 2015/0265022 ("Maclaine"), a Dyson patent application directed to an attachment for a hair dryer and other hand held appliances and titled "Attachment for a hand held appliance," published on September 24, 2015. Maclaine therefore qualifies as prior art to the '660 patent under AIA 35 U.S.C. §

102(a)(1). Maclaine was not cited or discussed during prosecution of the ’660 patent.

4. U.S. Patent No. 6,161,244 (Ex. 1008)

U.S. Patent No. 6,161,244 (“Jeannet”) titled “Toothbrush,” issued on December 19, 2000. Jeannet therefore qualifies as prior art to the ’660 patent under AIA 35 U.S.C. § 102(a)(1). Jeannet was not cited or discussed during prosecution of the ’660 patent.

C. How the Challenged Claims Are To Be Construed Under 37 C.F.R. § 42.104(b)(3)

A claim subject to *inter partes* review shall be construed using the same standard as in a civil action. 37 C.F.R. § 42.100(b). The Board need only construe terms “to the extent necessary to resolve the controversy.” *Nidec Motor Corp. v. Zhongshan Broad Ocean Motor Co.*, 868 F.3d 1013, 1017 (Fed. Cir. 2017). Petitioners submit that no construction of any claims term is necessary for the Board to resolve. Petitioners maintain that the Challenged Claims would have been anticipated and/or obvious under any reasonable construction.

D. How the Challenged Claims Are Unpatentable Under 37 C.F.R. § 42.104(b)(4)

An explanation of how the Challenged Claims are unpatentable under the statutory grounds identified above, including the identification of where each element of the claim is found in the prior art patents or printed publications, is provided below.

E. Supporting Evidence Under 37 C.F.R. § 42.104(b)(5)

The exhibit numbers of the supporting evidence relied upon and the relevance of the evidence to the Challenged Claims, including an identification of specific portions of the evidence that support the challenge, are provided below. A list of exhibits identifying the exhibits is also included in this Petition pursuant to 37 C.F.R. § 42.63(e). The technical information and grounds for rejection explained in the Petition are further supported by the Declaration of Dr. Nosenchuck (Ex. 1003). Ex. 1003, ¶¶1-261.

F. Payment of Fees

Pursuant to 37 C.F.R. §§ 42.103 and 42.15(a), the required fee is being submitted herewith. The Office is authorized to charge any fee deficiency, or credit overpayment, to deposit account no. 50-1408, including additional fees due in connection with this Petition.

III. TECHNICAL BACKGROUND

A. Summary of the Alleged Invention of the ’660 Patent

The ’660 patent claims only a single improvement and provides a brief disclosure. The ’660 patent purports to provide “a solid connection between the attachment and the appliance for when hair is under tension with an easily removable attachment when required,” Ex. 1001, 1:29-32, by implementing “a curved slot” which is “advantageous over a traditional bayonet fitting.” *Id.*, 7:18-37. An example attachment mechanism is illustrated below:

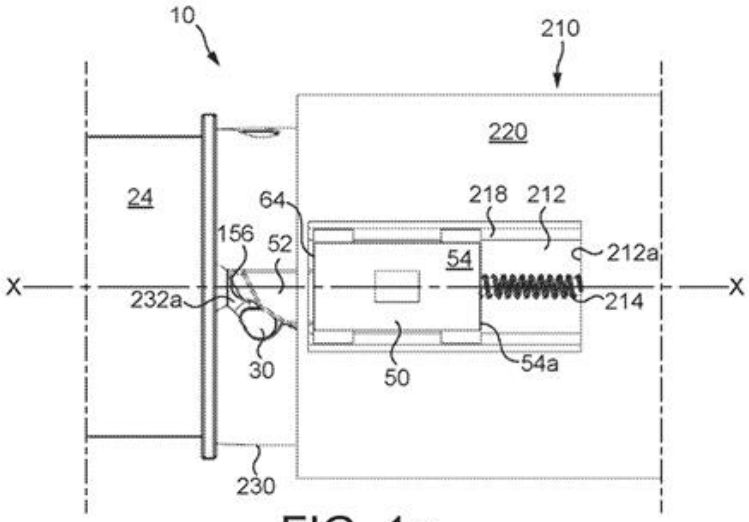

FIG. 1a

Id., FIG. 1a.

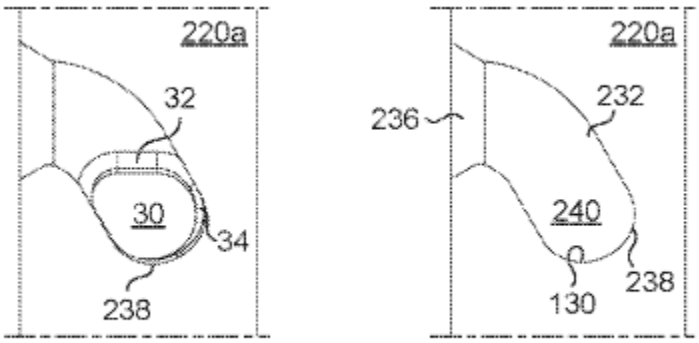

FIG. 6a FIG. 6b

Id., FIGS. 6a, 6b.

Claim 1 is representative of the claimed subject matter:

> 1. A handheld appliance having a body and an attachment, the body comprising an attachment mechanism having a first slot and an actuator, the attachment comprising a first protrusion configured to engage with the first slot, wherein the actuator has a first position and a second position and

> the actuator is slidably moved from the first position towards the second position in a longitudinal direction of the body as the first protrusion engages with the first slot; wherein the body extends along a longitudinal axis and the first slot extends both radially around and axially along the body.

Id., cl. 1.

As explained below, the sole alleged improvement claimed in the ’660 patent—a bayonet fastener having curved slots—was well-known and disclosed decades prior to the earliest possible priority date of the ’660 patent by at least Hoblingre or Mouhot and/or rendered obvious by Hoblingre or Mouhot in view of Maclaine and Jeannet. Ex. 1003, ¶¶25-30.

B. Summary of the Relevant Prosecution History of the ’660 Patent

The application that issued as the ’660 patent—Application No. 15/689,705 (“the ’705 application”)—was filed August 27, 2017 and purports to claim priority from GB Application No. 1614825 filed on September 1, 2016. Ex. 1002, 357. The independent claims as originally filed did not recite the sole alleged improvement—curved slots. After a restriction requirement by the Examiner, the Applicant elected originally-filed claim 1 to an appliance. *Id.*, 221-223.

On September 18, 2020, the Examiner issued a 102 rejection over WO95/20339 (“Vasey”), a referenced cited by the Applicant. *Id.*, 192-198.

On January 19, 2021 the Applicant amended independent claim 1 to recite "the actuator is moved from the first position towards the second position <u>in a longitudinal direction of the body</u> as the protrusion engages with the first slot" to distinguish the claims over Vasey. *Id.*, 186-190.

On April 26, 2021, the Examiner allowed claims 1-25, 32-40 and issued a 102 rejection of other claims not challenged in this proceeding. *Id.*, 155-158.

In response to amendments made to those unchallenged claims, on September 29, 2021, the Examiner withdrew his indication of allowability and rejected claims 1-7, 9-23, 32-35, 39, and 40 over McCarthy U.S. Patent No. 3,280,439 ("McCarthy") and indicated that dependent claim 8, reciting "wherein the body extends along a longitudinal axis and the first slot extends both radially round and axially along the body," and dependent claim 24, reciting a "user operated button which engages with the actuator" recited allowable subject matter. *Id.*, 100-107.

It was not until December 22, 2021, over four years after the U.S. application was filed, that the Applicant amended independent claim 1 to include the allowable features of claim 8—the "the first slot extends both radially round and axially along the body." *Id.*, 82-89. The Applicant also amended claim 24 to be drafted in independent form.

On April 13, 2022, the Examiner withdrew his indication of allowability and issued a 102 rejection of claims 1-7, 9-16, 19, 23-25, and 32-40 over U.S. Patent No.

3,955,064 ("Demetrio"), a reference that the Applicant had previously cited in an earlier communication with the Office during prosecution. *Id.*, 64-70.

On July 12, 2022, the Applicant amended independent claim 1 to recite "the actuator is slidably moved from the first position towards the second position in a longitudinal direction of the body as the protrusion engages with the first slot" to distinguish the claims from Demetrio. *Id.*, 43-56.

On October 14, 2022, the Examiner issued a notice of allowance, *id.*, 29-33, and the '660 patent issued on February 28, 2023.

C. Person of Ordinary Skill in the Art

The '660 patent relates to the field of attachment mechanisms for appliances. Ex. 1001, Abstract. A POSITA in the field on or around September 1, 2016, would have had a Bachelor's degree in Mechanical or Aerospace Engineering (or an equivalent discipline) or equivalent work experience, and at least one year's worth of experience in research, design, and/or development related to appliances such as hair care appliances (or other comparable industrial design). Additional education could substitute for experience, and vice versa. Ex. 1003, ¶¶16-18.

IV. GROUNDS OF UNPATENTABILITY

A. Ground 1: Hoblingre Anticipates Claims 1-9, 15, 23-24, and 32

1. Overview of Ground

Hoblingre discloses every element of claims 1-9, 15, 23-24, and 32 of the '660 patent and anticipates those claims. *Id.*, ¶¶59-121.

a. Summary of Hoblingre

Hoblingre discloses a "rapid fastener of the bayonet type," Ex. 1004, Title, for connecting "in the axial direction and in rotation of two elements," *id.*, Abstract. Hoblingre is in the same field of endeavor (attachment mechanisms for appliances) as the claimed invention. Ex. 1003, ¶¶45-47. To the extent that the field of endeavor is determined to be handheld or hair care appliances, Hoblingre is reasonably pertinent to the problem faced by the inventor (attachment mechanisms for easy engagement and disengagement of two components). *Id.* The first element comprises a "socket" having "at least one helical slot" and an "axially slidable" ring that includes "longitudinal slot[s]" that are "laterally offset relative to the entrance" of the helical slot. Ex. 1004, Abstract. The ring is "biased by a spring" "toward the entrance of the socket." *Id.*, Abstract. The second element comprises a "stem" with a "driving pin" that, "in entering the helical slot, urges back the ring but is guided under the action of the spring" and the edges of the slots in the ring "toward the inner end of the helical slot" to create a secure connection. *Id.*, Abstract; Ex. 1003, ¶¶45-47.

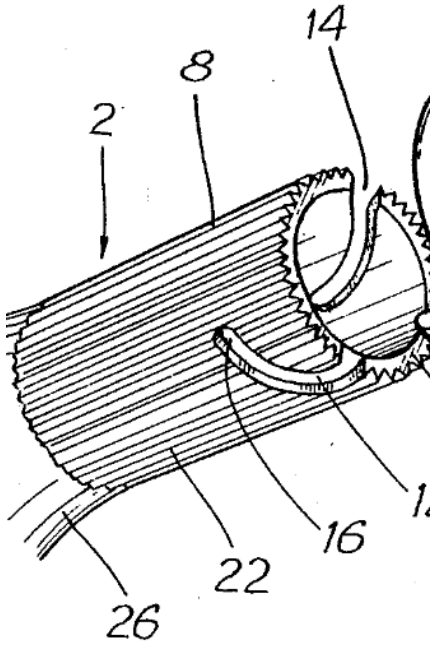

FIG. 2

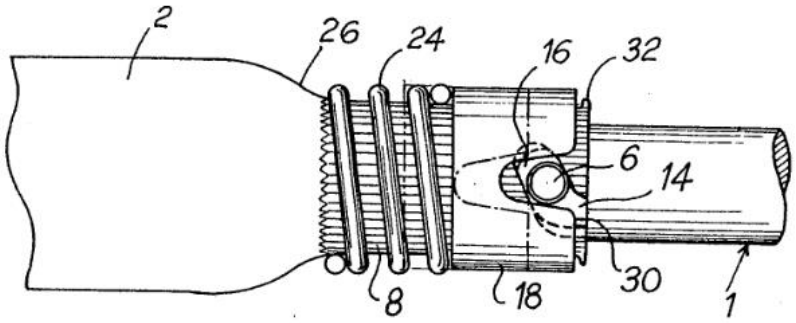

Id., FIGS. 1 (top, excerpt), 2 (bottom).

2. Detailed Analysis of Ground 1

a. Element 1[pre]: "A handheld appliance"

"Generally, the preamble does not limit the claims," and that general principle applies here. *Allen Eng'g Corp. v. Bartell Indus., Inc.*, 299 F.3d 1336,

1346 (Fed. Cir. 2002). The term "handheld" appears only in the preambles of the '660 patent's independent claims, and is entirely absent from its dependent claims. For example, although claim 1 recites a "handheld appliance," each of its dependent claims recites "[t]he appliance of claim 1." The consistent, repeated absence of the phrase "handheld" in the dependent claims indicates that the drafter of the Challenged Claims clearly did not intend the preamble phrase "handheld" to be limiting of the structure of the claimed invention. Indeed, the Federal Circuit has long held that where the "claim body describes a structurally complete invention such that deletion of the preamble phrase does not affect the structure or steps of the claimed invention," as is true for the Challenged Claims, the preamble is not limiting. *Catalina Mktg. Int'l, Inc. v. Coolsavings.com, Inc.*, 289 F.3d 801, 809 (Fed. Cir. 2002).

Without the "handheld" preamble phrase, Element 1[pre] recites only "[a]n appliance," a generic term signaling an apparatus claim. *TomTom v. Adolph*, 790 F.3d 1315 (Fed. Cir. 2015) (interpreting a preamble to be partially-limiting); *Bio-Rad Labs., Inc. v. 10X Genomics Inc.*, 967 F.3d 1353, 1371 (Fed. Cir. 2020) (explaining that the preamble in *TomTom* was "neatly packaged into two separate

portions"). Hoblingre discloses this limitation.[3] Ex. 1003, ¶¶61-65. Hoblingre discloses an improved "rapid fastener" of the "bayonet type" that establishes a connection between "two coaxial shafts," i.e., an appliance. Ex. 1004, 2:14-19. Hoblingre explains that, although "[c]ouplings of this type are well known and employed in many fields," *id.*, 1:13-14, existing mechanisms "are reserved for the connection of elements intended to remain stationary since they can only ensure with difficulty the reliable transmission of a torque," and generally "require precise moving operations and the application of well-determined clamping forces which create possible errors in the positioning," *id.*, 1:14-25.

Hoblingre's appliance (improved rapid fastener) allows for a secure connection to be established even when there is "no axial or angular clearance" and permits, "on one hand, the transmission of even large torques and, on the other hand, the establishment of the connection by a single shifting" while being "capable of being disassembled at any moment." *Id.*, 1:28-35.

b. Element 1[a] "having a body and an attachment"

Hoblingre discloses this limitation. Ex. 1003, ¶¶66-71. Hoblingre's rapid fastener is "adapted to interconnect two elements": (1) a first shaft 1 comprising a

---

[3] It would have been obvious to use the attachment system of Hoblingre in a handheld appliance. Accordingly, if the preamble is found to be limiting, then the claims should be found unpatentable as obvious as set forth in Grounds 2 and 3.

"male stem carrying at least one laterally projecting pin," illustrated below in red, and (2) a second shaft 2 comprising a "female socket having at least one helical slot" for receiving the pin and "guiding and locking means carried by the socket" that "elastically bias[] the pin into the bottom of the helical slot" to "lock[] the pin" in position, illustrated below in red. Ex. 1004, 1:36-44.

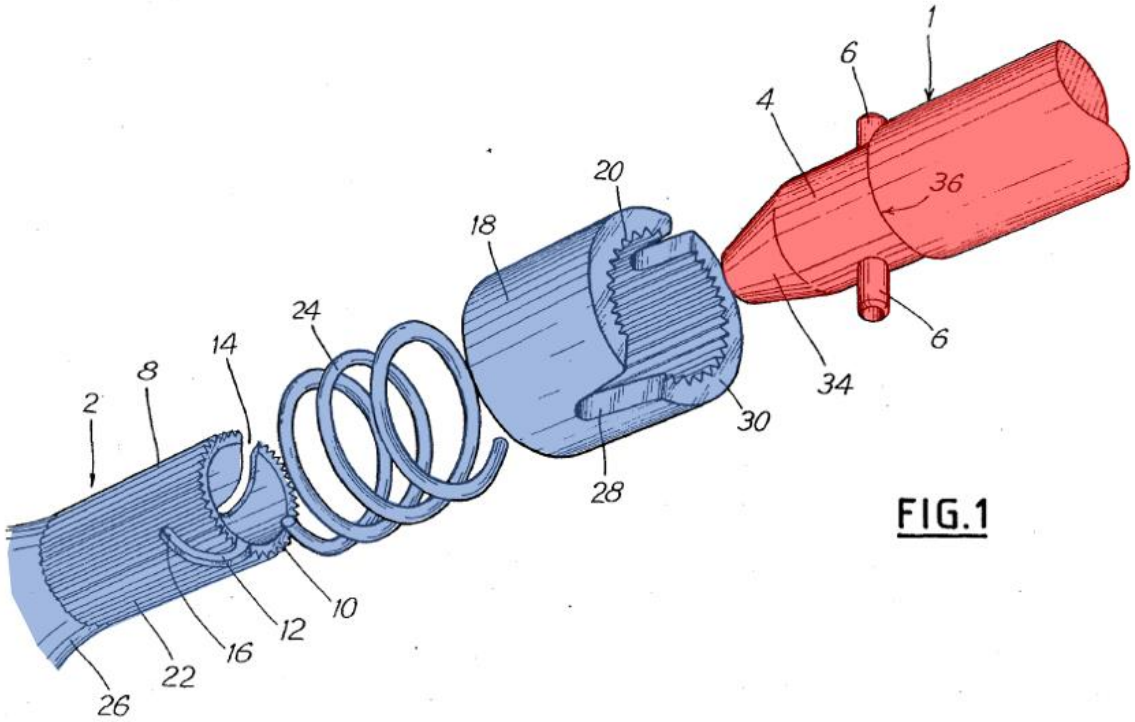

Id., FIG. 1 (annotated).

The first shaft 1 "has at its end an elongated stem 4 of substantially cylindrical shape which carries at least one driving pin 6 and preferably two pins." *Id.*, 2:14-19.

The second shaft 2 "terminates in a hollow, also cylindrical, socket 8 which is open at its entrance end 10" and includes "two slots 12 each capable of receiving

one of the pins 6." *Id.*, 2:19-23. Each of the slots 12 "has a curved shape, i.e. it includes, following on a substantially axial entrance portion 14, a substantially helical portion 16." *Id.*, 2:24-26.

The guiding and locking means "carried by the socket" 8, *id.*, 1:42-44, comprises a ring 18 "[s]lidably mounted on the socket 8" having "two slots 28 extending generally longitudinally" that are "open at the end" and have "a divergent shape, their width increasing progressively in the direction toward their open end," *id.*, 2:27-45. The guiding and locking means also comprises a coil spring 24 "mounted around the socket 8" that "bears, on one hand, against the edge of the slidable ring 18, and on the other hand against an outer shoulder or a projection 26 on" shaft 2 so that it biases "the ring 18 outwardly, i.e. in the direction toward the open end 10 of the socket" 8. *Id.*, 2:27-38.

Hoblingre's second shaft 2 comprising (1) socket 8, for receiving elongated stem 4, and (2) guiding and locking means comprising ring 18 and coil spring 24 (referred to herein as "guiding and locking means"), for guiding and locking elongated stem 4 in place, discloses a body. Hoblingre's first shaft 1 comprising elongated stem 4, which is inserted into and then locked in position within socket 8 by guiding and locking means, discloses an attachment. Ex. 1003, ¶¶66-71.

c. Element 1[b] "the body comprising an attachment mechanism having a first slot and an actuator"

Hoblingre discloses this limitation. *Id.*, ¶¶72-76. Hoblingre's second shaft 2 comprising socket 8 and the guiding and locking means together disclose a body. Socket 8 and the guiding and locking means comprising ring 18 and coil spring 24 together disclose an attachment mechanism having a first slot and an actuator. *Id.*

Socket 8 includes two slots 12 that are each "curved" in shape and have a "substantially axial entrance portion 14," illustrated below in blue, and a "substantially helical portion 16," illustrated below in yellow. Ex. 1004, 2:24-26.

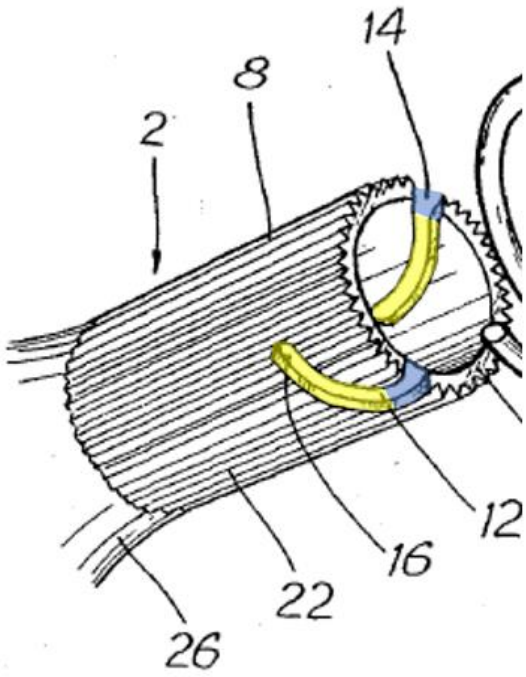

Id., FIG. 1 (excerpt, annotated).

Either of the slots 12 constitutes a single "first slot" as illustrated below in green. Ex. 1003, ¶75. The other of the slots 12 constitutes a single "second slot." *Id.*

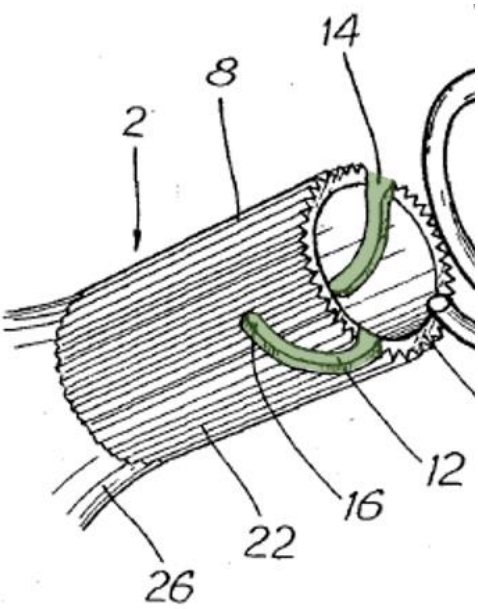

Ex. 1004, FIG. 1 (excerpt, annotated).

Hoblingre's guiding and locking means comprises ring 18, illustrated below in red, and coil spring 24, illustrated below in orange. *Id.*, 2:27-45. Ring 18 includes "two slots 28" that are each "disposed on top of one of the slots 12 of the socket 8." *Id.*, 2:46-50. The slots 28 each "has sufficient width to permit the entry of the pin[s] 6," *id.*, 2:39-45, and is "laterally offset relative to the entrance 14 of the slot 12 so that the end edge of the ring 18 partly closes this entrance of slot 12," *id.*, 2:46-50. Coil spring 24 biases ring 18 "outwardly" toward the open end 10 of socket 8. *Id.*,

2:32-38. The guiding and locking means comprising ring 18 and coil spring 24 constitutes an actuator. Ex. 1003, ¶¶72-76.

FIG. 2

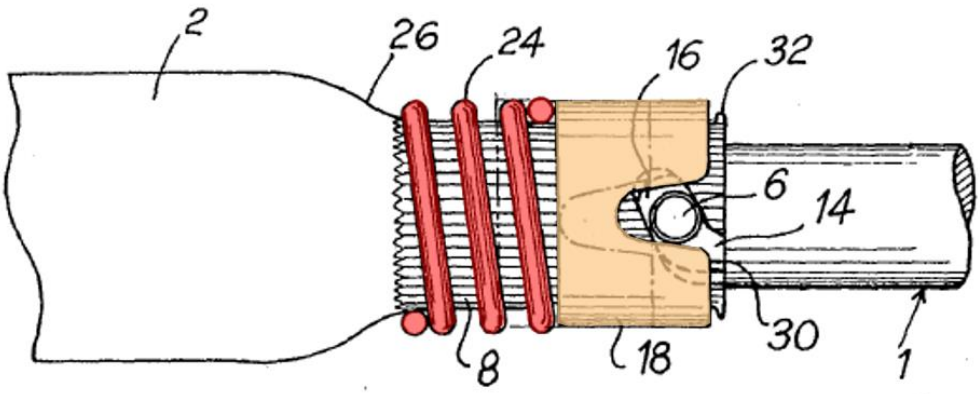

Ex. 1004, FIG. 2 (annotated).

d. Element 1[c] "the attachment comprising a first protrusion configured to engage with the first slot"

Hoblingre discloses this limitation. Ex. 1003, ¶¶77-80. Hoblingre's first shaft comprising elongated stem 4 discloses an attachment. Elongated stem 4 comprises "at least one driving pin 6 and preferably two pins," illustrated below in purple. Ex. 1004, 2:14-19.

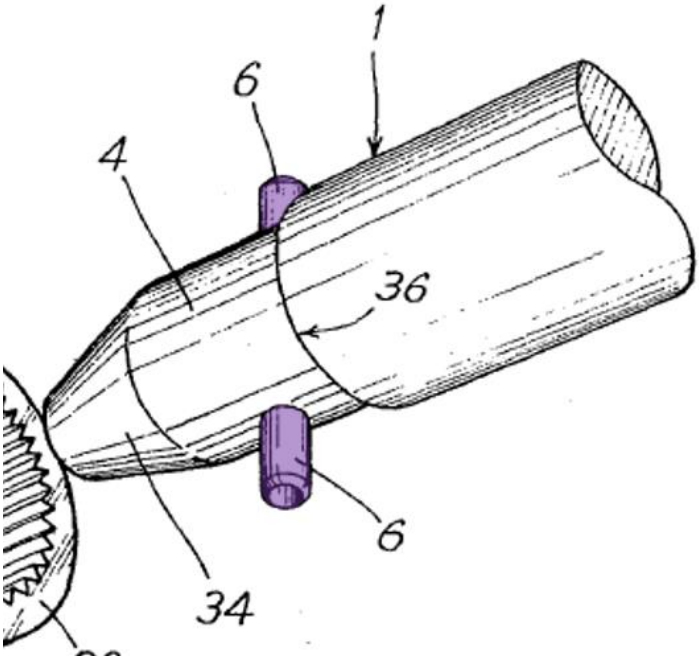

Id., FIG. 1 (excerpt, annotated).

Elongated stem 4 can be placed inside socket 8 by "placing each of the pins 6 in front of the entrance 14 of one of the slots 12" and then exerting "a mere axial force" on either of shaft 1 or 2. *Id.*, 2:58-65. This force "enables the pin[s] 6 to urge back the edge 30 of the ring 18 against the action of the spring 24 and thus to enter the slot 12." *Id.*, 2:58-65. Due to the force of coil spring 24 and "the inclination of the lower edge of the portion 16 of the slot 12, the pin[s] 6 [are] progressively laterally urged back by the edge of the slot[s] 28" such that as the pins 6 advance in slots 28, they are "angularly displaced relative to the entrance of the slot[s] 12" and approach the "inner end" of slots 28. *Id.*, 2:65-3:3. The pins 6 then slide along the opposed edges of the slots 12 and 28, enabling "the ring 18 to progressiv[ely] resume its initial position," until the pins 6 reach a position where they are "trapped between

edges of the slots 12 and 28 so that at any moment the return movement thereof is precluded." *Id.*, 3:3-8.

Either one of Hoblingre's slots 12 constitutes a first slot. Ex. 1003, ¶¶72-80. In the side view of Hoblingre's appliance below, one pin 6, illustrated below in purple, engages with one slot 12 (illustrated below in green). Thus, either of Hoblingre's pins 6 constitutes a first protrusion configured to engage with the first slot. *Id.*

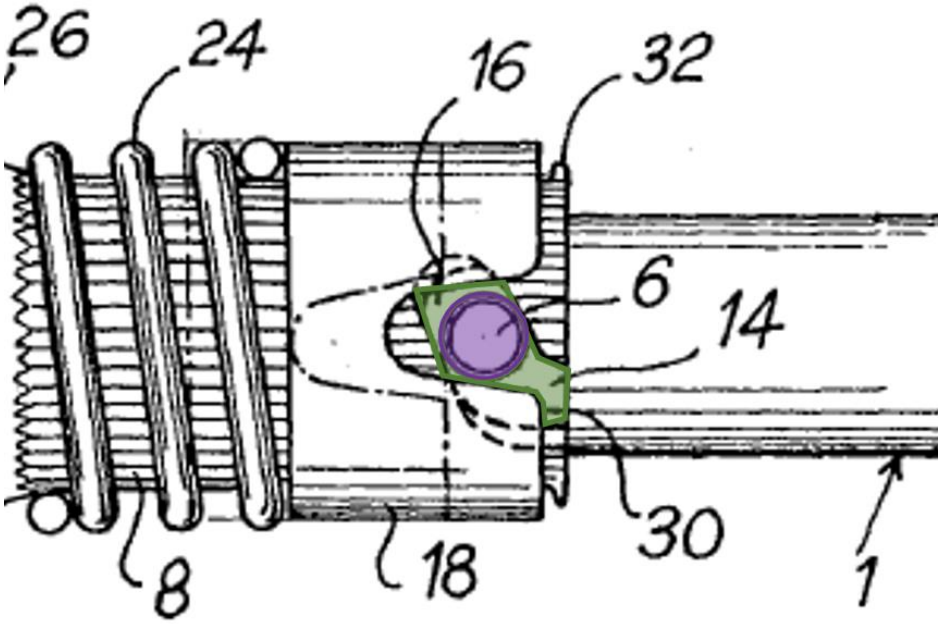

Ex. 1004, FIG. 2 (excerpt, annotated).

e. Element 1[d] "wherein the actuator has a first position and a second position and the actuator is slidably moved from the first position towards the second

position in a longitudinal direction of the body as the first protrusion engages with the first slot"

Hoblingre discloses this limitation. Ex. 1003, ¶¶81-83. Hoblingre's guiding and locking means discloses an actuator. Hoblingre discloses that ring 18 is "axially slidable along the socket" 8, Ex. 1004, 1:45-46, and "biased toward the open end of the [socket]" 8 by "spring 24," *id.*, 1:45-46, 2:27-48. As described above, to enter a locking position, pins 6 enter helical slots 12 and are "angularly displaced" relative to entrances 14 of slots 12 until pins 6 are "trapped between edges of the slots 12 and 28 so that at any moment the return movement thereof is precluded." *Id.*, 1:36-63, 2:58-3:36. Thus, Hoblingre's actuator, the locking and guiding means, is slidably moved between a first position (in which ring 18 is positioned at the open end 10 of socket 8, coil spring 24 is not compressed, and pins 6 have not entered slots 12) and a second position (in which ring 18 compresses coil spring 24 as pins 6 advance further into slots 12). *Id.*, 2:58-3:36; Ex. 1003, ¶¶81-83.

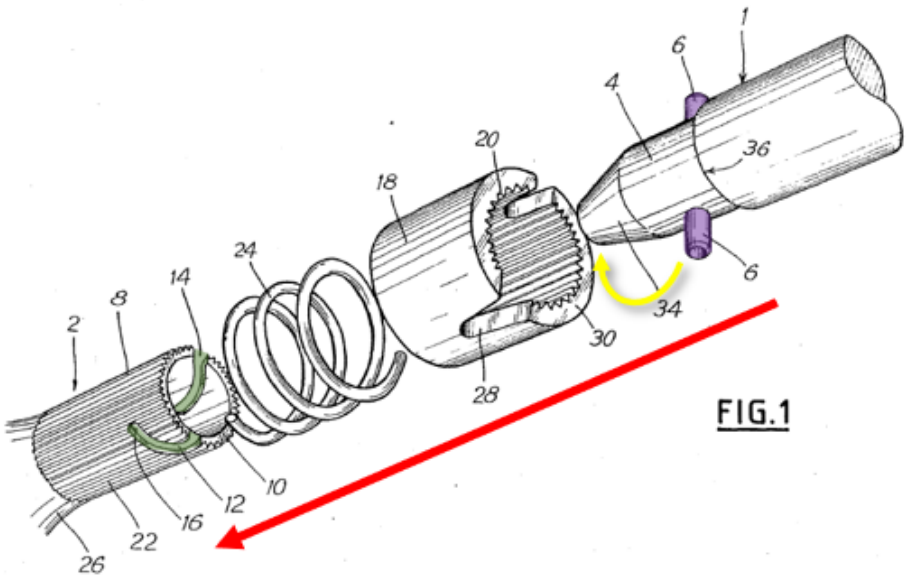

FIG.1

FIG.2

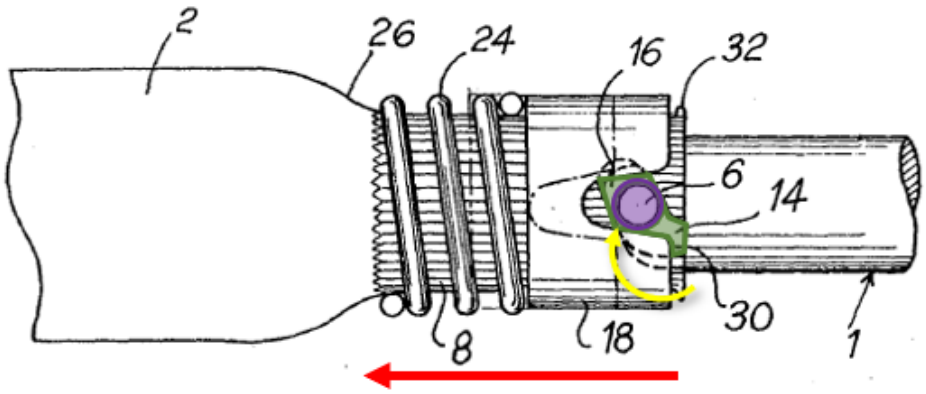

Ex. 1004, FIGS. 1, 2 (annotated).

When Hoblingre's actuator moves from the first position, in which coil spring 24 is uncompressed and ring 18 is toward the open end 10 of socket 8, to the second locked position, in which ring 18 slides along a longitudinal "axial" direction of socket 8 (illustrated above by the red arrow) away from the open end 10 of socket 8

and compresses coil spring 24. Ex. 1003, ¶83. As ring 18 compresses coil spring 24 and continues sliding along the longitudinal direction, the first protrusion, into the second position, one of pins 6 (illustrated above in purple) enters the first slot, one of slots 12 (illustrated above in green).

f. Element 1[e] "wherein the body extends along a longitudinal axis and the first slot extends both radially around and axially along the body."

Hoblingre discloses this limitation. Ex. 1003, ¶¶84-89. Hoblingre's socket 8 and the guiding and locking means constitute a body. As shown below in annotated Figures 1-2, Hoblingre's socket 8, ring 18, and coil spring 24 each extend along a longitudinal axis illustrated in pink. *See* also Ex. 1004, 2:14-23 (describing "coaxial shafts" 1 and 2, where shaft 2 includes an "also cylindrical" socket 8 and a guiding and locking means including a ring 18 that is "[s]lidably mounted" on, and thus coaxial with, socket 8, and a coil spring 24 "also mounted around" socket 8).

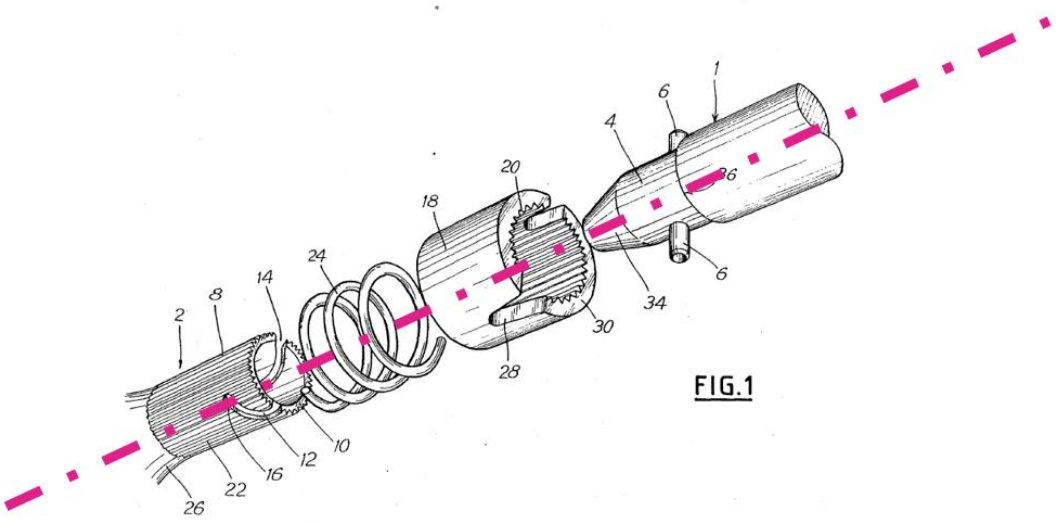

Id., FIG. 1 (annotated).

Slots 12 each include a "substantially axial entrance portion 14," illustrated below in blue, that extends axially along socket 8, and a "substantially helical portion 16," illustrated below in yellow, that extends radially around socket 8. *Id.*, 2:24-26. Thus, slots 12 each extend both axially, illustrated below in pink, and radially, illustrated below in yellow, along Hoblingre's body component.

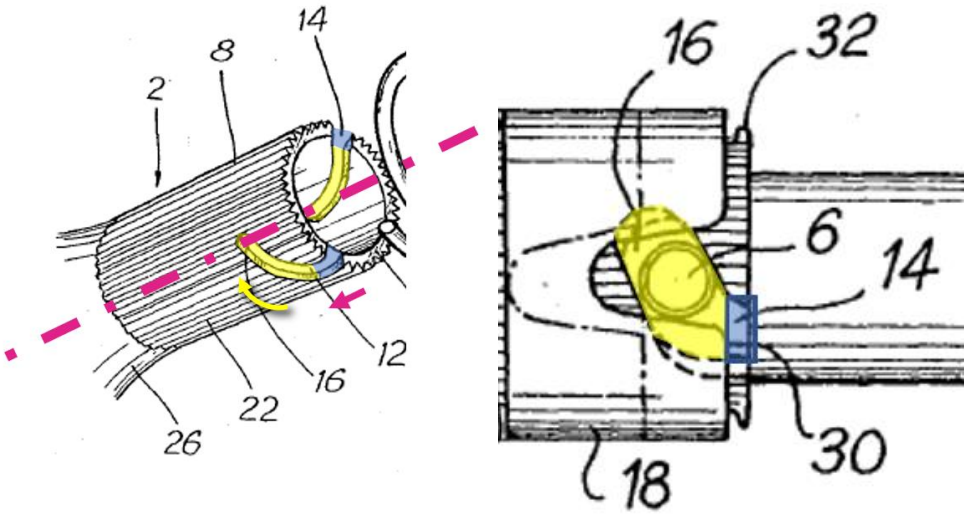

Id., FIGS. 1 (left, excerpt, annotated), 2 (right, excerpt, annotated).

Thus, Hoblingre discloses each element of claim 1 and anticipates claim 1. Ex. 1003, ¶¶61-89.

g. Claim 2: "The appliance of claim 1, wherein in the first position, the actuator at least partially obscures the first slot."

Hoblingre discloses this claim. Ex. 1003, ¶¶87-89. Hoblingre's guiding and locking means constitutes an actuator, and one of slots 12 in socket 8 comprises the

first slot. When elongated stem 4 is introduced inside socket 8, the "end edge 30 of the ring 18" "partly closes," or partially obscures, the entrances of slots 12. *Id.*, 2:46-50. Thus, a portion of the actuator (end edge 30 and the edge of one of the slots 28 of ring 18) at least partially obscures the first slot (one of the slots 12) when the actuator is in the first position (ring 18 is toward the open end 10 of the socket 8 and coil spring 24 is not compressed). Ex. 1003, ¶¶87-89.

h. Claim 3: "The appliance of claim 1, wherein the actuator comprises a surface which interacts with the first protrusion when the first protrusion engages with the first slot."

Hoblingre discloses this claim. Ex. 1003, ¶¶90-92. Hoblingre's guiding and locking means constitutes an actuator. Hoblingre discloses that ring 18 includes a surface (the continuous upper surface of ring 18) having at least two distinct sections (end edge 30 and the edges of slots 28) that interacts with pins 6 when they engage with slots 12. Ex. 1004, 2:46-50, 3:5-8. As illustrated in Figure 2 below, with respect to the first slot (one of the slots 12, illustrated in green) and the first protrusion (one of the pins 6, illustrated in purple), a portion of the actuator (the edge of one of the slots 28, illustrated in orange) of ring 18 comprises a surface that interacts with the first protrusion as it engages the first slot in the locked position. *Id.*, 3:5-8; Ex. 1003, ¶¶90-92.

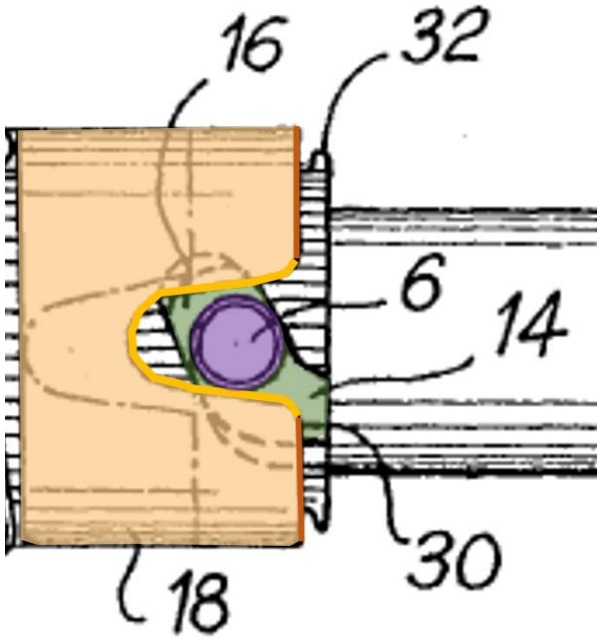

Ex. 1004, FIG. 2 (excerpt, annotated).

i. Claim 4: "The appliance of claim 3, wherein the surface is configured to at least partially define the first slot at or near the second position."

Hoblingre discloses this claim. Ex. 1003, ¶¶93-95. Hoblingre discloses that the first protrusion (one of the pins 6) engages with the first slot (one of the slots 12) while in the position shown in Figure 2, in which the ring 18 is away from the open end 10 of socket 8 and coil spring 24 is compressed. In this position shown below, "the pin 6 is trapped between edges of the slots 12 and 28." Ex. 1004, 3:5-8. Thus, the edge of one of the slots 28 effectively forms the upper and lower walls of the first slot (as shown in the side view orientation in Figure 2), and at least partially

defines the first slot, as illustrated below in bold lines. *Id.*, 3:5-8; Ex. 1003, ¶¶93-95.

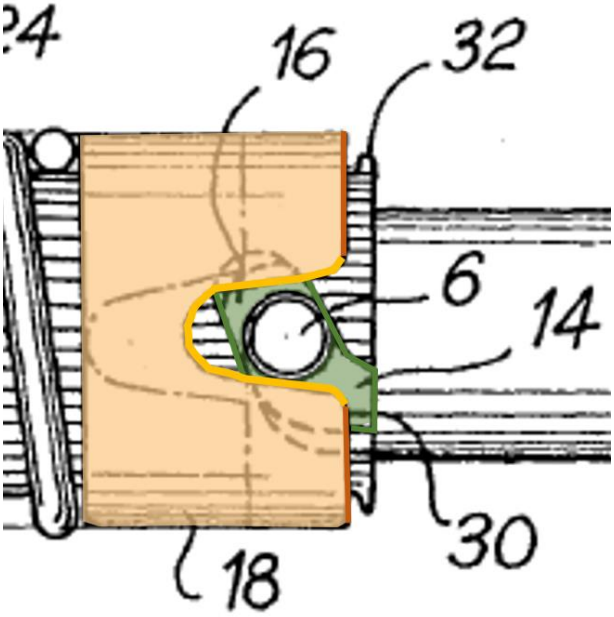

Ex. 1004, FIG. 2 (excerpt, annotated).

j. Claim 5: "The appliance of claim 3, wherein the first protrusion comprises a first face for engagement with the actuator."

Hoblingre discloses this claim. Ex. 1003, ¶¶96-98. Hoblingre discloses that the first protrusion (one of the pins 6) engages with a surface (the edge of one of the slots 28) of the actuator (guiding and locking means, which comprises ring 18 and coil spring 24). Hoblingre's first protrusion comprises a continuous cylindrical outer wall surface, or face (illustrated in a bold purple line), that engages the actuator (the edge of the slots 28 shown in orange below). Ex. 1004, 2:46-50, 3:5-8; Ex. 1003, ¶¶96-98.

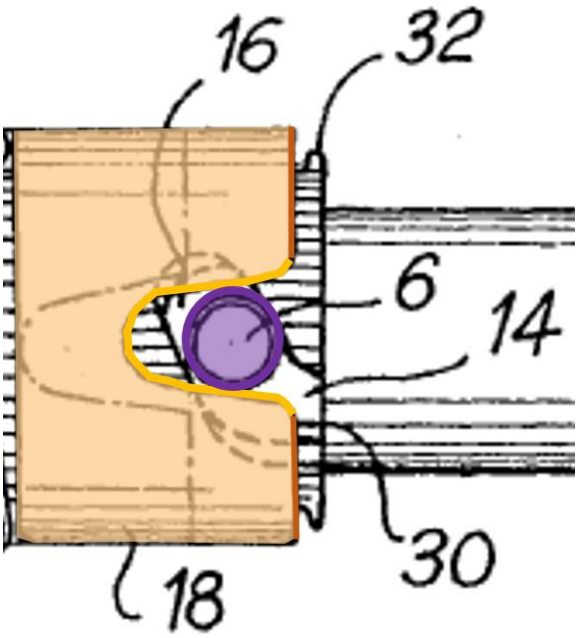

Ex. 1004, FIG. 2 (excerpt, annotated).

k. Claim 6: "The appliance of claim 5, wherein the first face engages with the surface of the actuator."

Hoblingre discloses this claim. Ex. 1003, ¶¶99-101. Hoblingre discloses that the first face (illustrated below in a bold purple line) of the first protrusion (one of the pins 6) engages the surface of the actuator (guiding and locking means). Ex. 1004, 2:46-50, 3:5-8; Ex. 1003, ¶¶99-101.

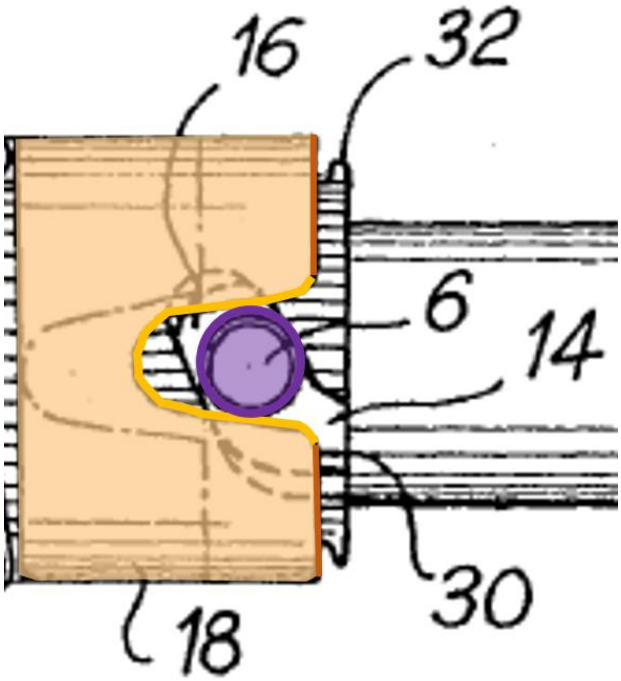

Ex. 1004, FIG. 3 (annotated).

l. Claim 7: "The appliance of claim 1, wherein when the first protrusion is at a predetermined position within the first slot, the actuator returns towards the first position."

Hoblingre discloses this claim. Ex. 1003, ¶¶102-105. Hoblingre discloses that when its first protrusion (one of the pins 6) is fully within the "inner end" of the first slot (one of the slots 12), the first protrusion "then slides along the opposed edges of the two slots" 12 and 28 "and thereby enables the ring 18 to progressiv[ely] resume its initial position. Ex. 1004, 2:58-3:8. Thus, when the first protrusion (one of the pins 6) is at a predetermined position (i.e., at the inner end of one of the slots 12), the actuator (guiding and locking means) returns toward its first position in

which ring 18 is toward the open end 10 of socket 8 and coil spring 24 is less compressed. Ex. 1003, ¶¶102-105.

m. Claim 8: "The appliance of claim 7, wherein the actuator retains the attachment on the body."

Hoblingre discloses this claim. Ex. 1003, ¶¶106-108. Hoblingre discloses that its actuator (guiding and locking means) "closely lock[s] together" the shafts 1 and 2, and thus discloses that the actuator retains the attachment (shaft 1) on the body (shaft 2). Ex. 1004, 3:14-35.

FIG. 2

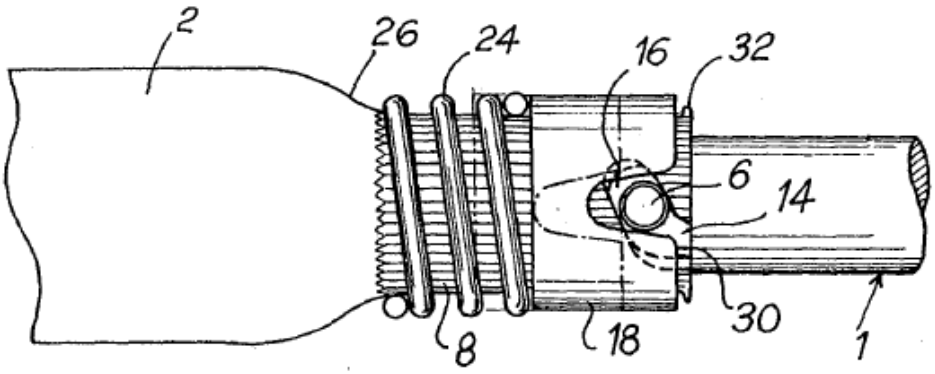

Id., FIG. 2.

n. Claim 9: "The appliance of claim 1, wherein the actuator is biased into the first position."

Hoblingre discloses this claim. Ex. 1003, ¶¶109-111. Hoblingre discloses that its actuator (guiding and locking means comprising ring 18 and coil spring 24)

is biased into the first position "i.e. in the direction toward the open end 10 of the socket" 8 by coil spring 24. Ex. 1004, 2:32-38; Ex. 1003, ¶¶109-111.

FIG. 2

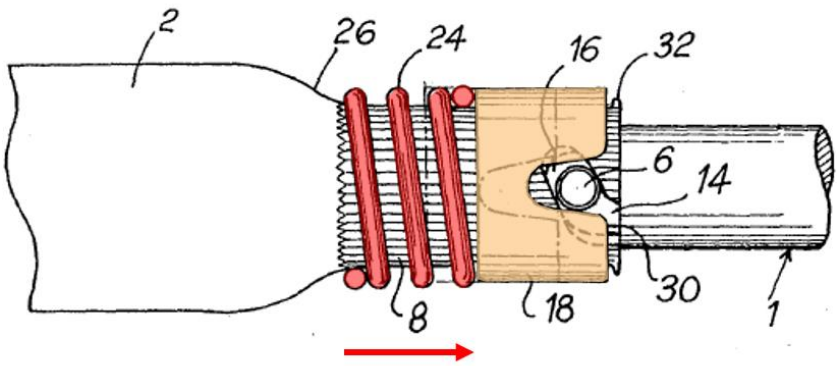

Id., FIG. 2 (annotated).

o. Claim 15: "The appliance of claim 1, wherein the body has a first end and a second end and the attachment mechanism is adjacent the second end."

Hoblingre discloses this claim. Ex. 1003, ¶¶112-114. Hoblingre's shaft 2, which "terminates in" socket 8 and guiding and locking means, constitutes a body. Ex. 1004, 2:14-23. A first end of the component comprising socket 8 and guiding and locking means is not shown and extends toward the left side of socket 8 in Figures 1 and 2 indicated by blue arrows. The end of shaft 2 terminating in socket 8 and guiding and locking means, a second end, is shown in Hoblingre's Figures 1 and 2 (e.g., the right side of socket 8 at the opening 10 indicated by red arrows). As illustrated below, guiding and locking means is adjacent to the end indicated by red arrows, which constitutes a second end. *Id.*, 2:14-23; Ex. 1003, ¶¶112-114.

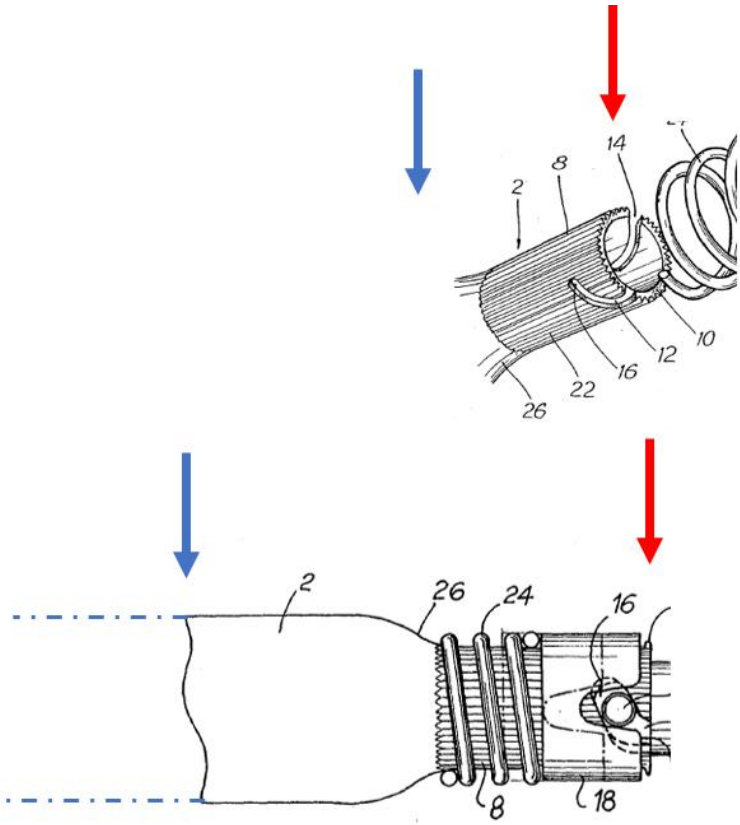

Ex. 1004, FIGS. 1, (top, excerpt, annotated) 2 (bottom, excerpt, annotated).

p. Claim 23: "The appliance of claim 1, comprising a second protrusion and a second slot."

Hoblingre discloses this claim. Ex. 1003, ¶¶115-117. Hoblingre explicitly discloses a second slot (the other one of the slots 12 illustrated below in green) opposite from the first slot and corresponding to a second protrusion (the other one of the pins 6 illustrated below in purple) which is opposite the first protrusion. Ex. 1003, ¶¶115-117.

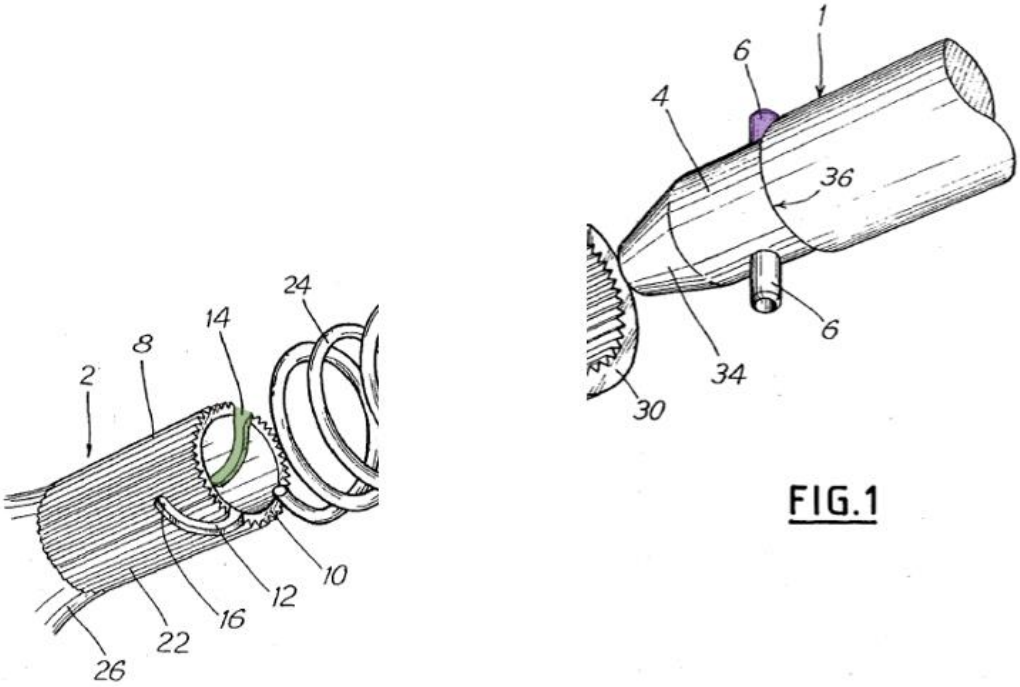

Ex. 1004, FIG. 1 (excerpt, annotated).

q. Claim 24: "The appliance of claim 23, wherein the second protrusion and second slot are radially spaced from the first protrusion and the first slot."

Hoblingre discloses this claim. Ex. 1003, ¶¶118-120. Hoblingre's first slot (one of the slots 12) and second slot (the other of the slots 12) are opposite each other, as are Hoblingre's first protrusion (one of the pins 6) and second protrusion (the other of the pins 6). Thus, the second slot and second protrusion are radially spaced from the first slot and first protrusion. Ex. 1003, ¶¶118-120.

r. Claim 32: "The appliance of claim 1, wherein the first slot causes the attachment to pivot relative to the body as the first protrusion engages with the first slot."

Hoblingre discloses this claim. Ex. 1003, ¶¶121-122. Specifically, because Hoblingre's first slot, one of the slots 12, includes a portion (substantially helical portion 16) extending laterally, "the inclination of the lower edge" of substantially helical portion 16 causes the attachment (shaft 1 terminating in elongated stem 4) to pivot (i.e., be "angularly displaced" or rotate about its longitudinal axis) relative to the body (shaft 2 comprising socket 8 and guiding and locking means) as the pins 6 "axially advance" (i.e., move along the longitudinal axis of the body) and are locked into place by engaging slot 12 and the edges of slot 28. Ex. 1004, 2:58-3:8; Ex. 1003, ¶¶121-122.

B. Ground 2: Hoblingre in View of Maclaine Renders Obvious Claims 1-9, 15, 18, 23-24, and 30-32

1. Overview of Ground

Maclaine discloses a handheld hair care appliance having a body and various attachments that mate with corresponding protrusions on a collar of a head via a "twist lock joint." Ex. 1007, [0092]. The combination of Hoblingre and Maclaine renders obvious claims 18, 30, and 31 of the '660 patent. Ex. 1003, ¶¶123-138. To the extent that the preamble of claim 1 is determined to be limiting, the combination of Hoblingre and Maclaine additionally renders obvious claims 1-9, 15, 23-24, and 32. Petitioners incorporate by reference the analysis of Ground 1 above. *See supra.*

a. Summary of Maclaine

Maclaine discloses a head, or "an attachment," "for a hand held appliance, in particular a hair care appliance such as a hot styling brush." Ex. 1007, [0002]. "In use, hair is wrapped around the" attachment of the appliance "whilst air or fluid exits through" slots in the head, "drying the hair and/or styling the hair into curls or waves." Hair "wraps automatically" around the attachment of Maclaine's appliance "due to the flow of air around the surface of the" attachment. *Id.*, [0049]-[0050]. Maclaine is in the same field of endeavor (attachment mechanisms for appliances) as the claimed invention, and specifically relates to handheld hair care appliances. Ex. 1003, ¶¶51-53. Maclaine discloses attachments of different shapes and sizes for creating different types of curls and waves. *See, e.g.*, Ex. 1007, [0062]-[0065], [0068], [0073]-[0074], [0077]. Maclaine also discloses attachments having bristles for detangling and faster drying. *Id.*, [0080]-[0089].

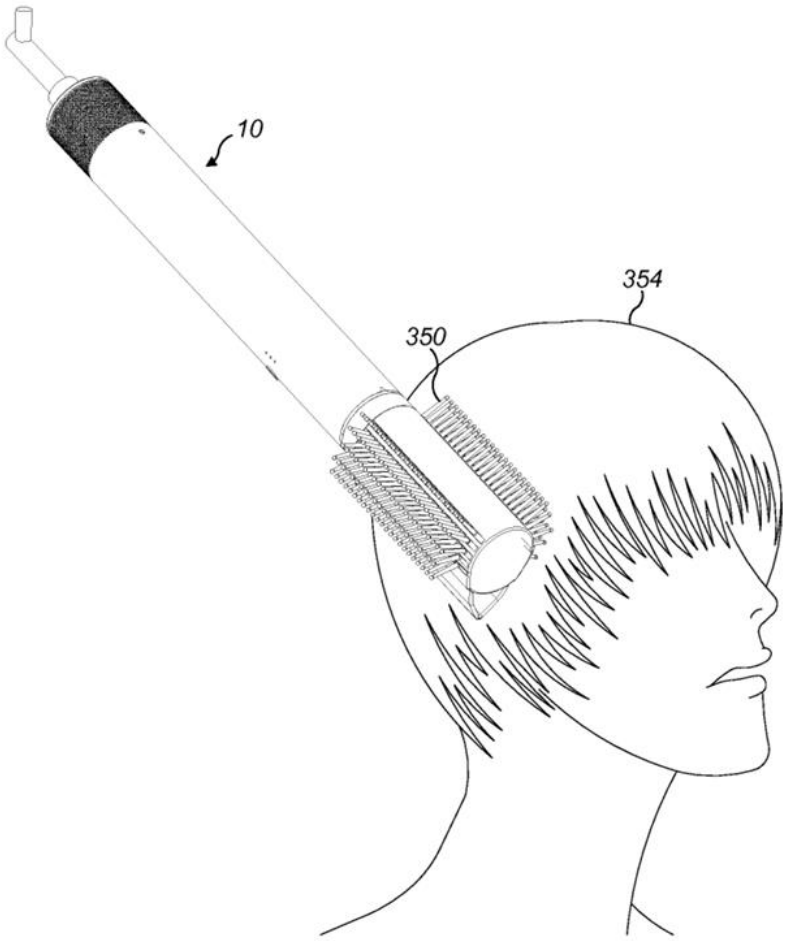

FIG. 14

Ex. 1007, FIG. 14.

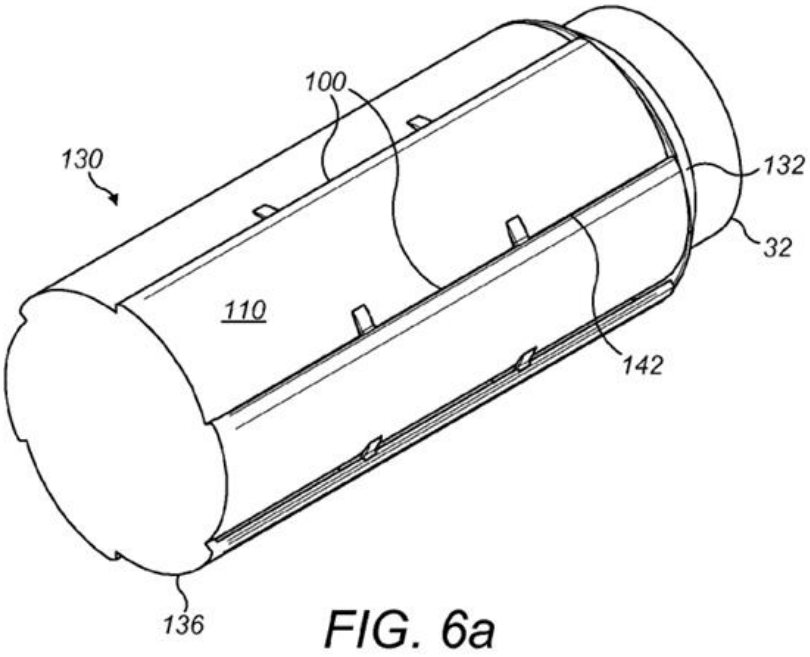

Ex. 1007, FIG.6a.

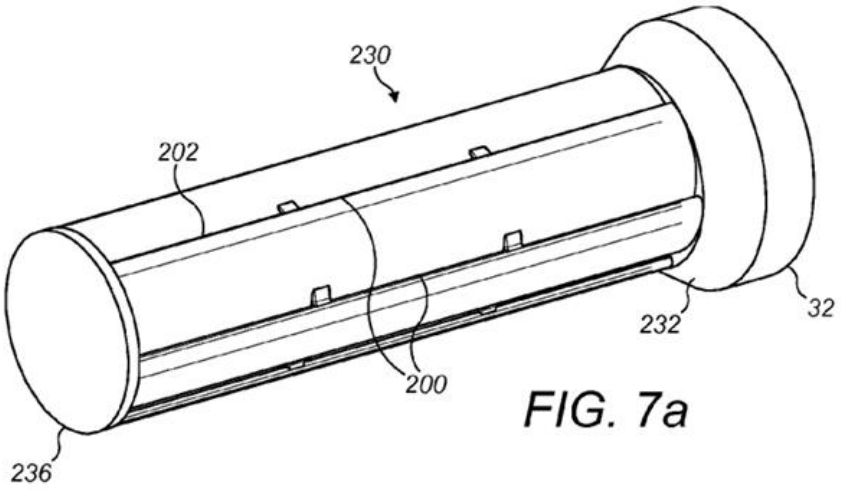

Ex. 1007, FIG. 7a.

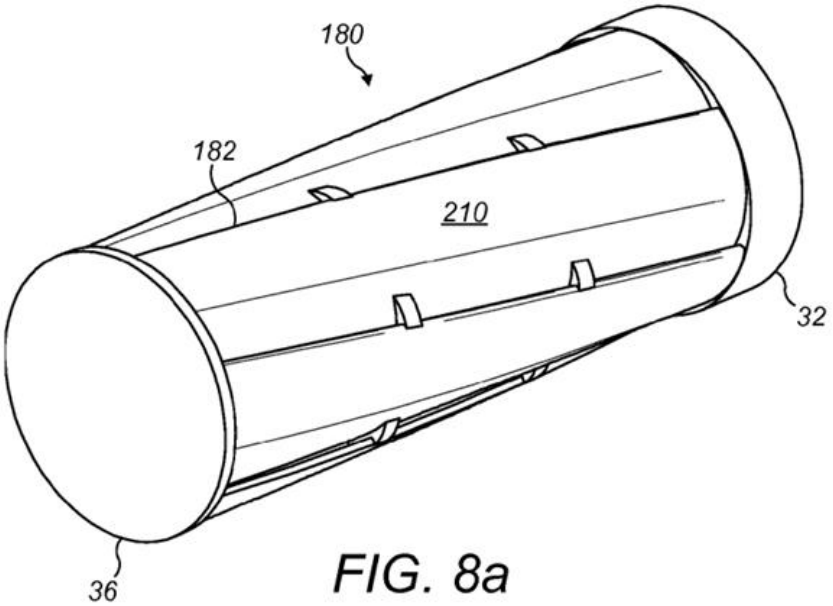

FIG. 8a

Ex. 1007, FIG. 8a.

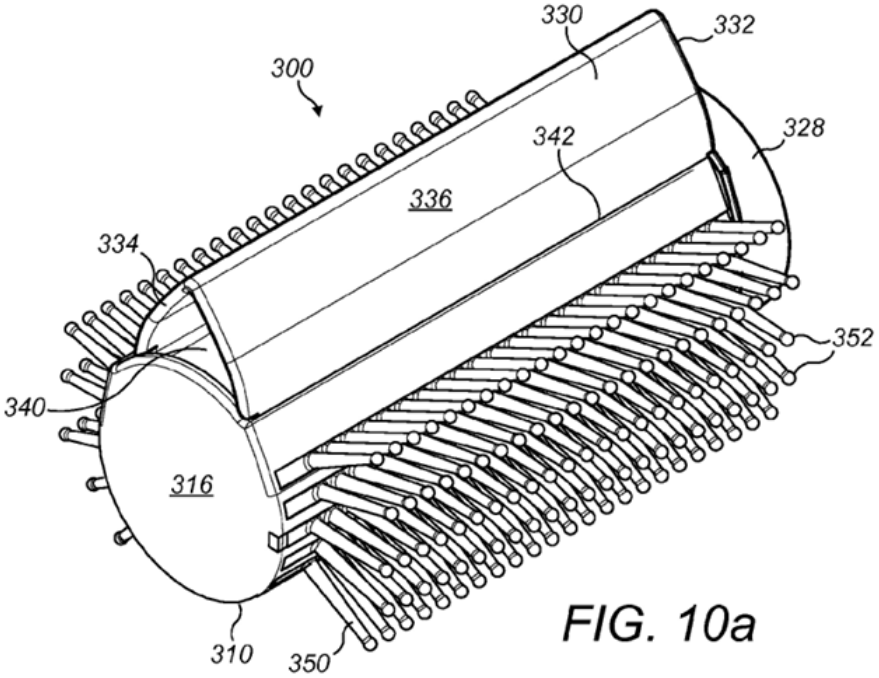

FIG. 10a

Ex. 1007, FIG. 10a.

Maclaine's attachment is secured to the body of the appliance by a "twist lock joint." *Id.*, [0092]. Maclaine's attachment includes "protrusions" on the "internal surface of the collar" of the attachment that are "adapted to engage a slot" or "three separate slots" on the handle. *Id.*, [0092]. The slot extends at least partially around an outer surface of the inner wall "and is helical so both a rotational and longitudinal movement is required to attach or remove the head from the handle." *Id.*, [0092].

b. Motivation to Combine Hoblingre and Maclaine

A POSITA would have been motivated to combine Hoblingre and Maclaine to achieve the claimed invention. Ex. 1003, ¶¶124-127. Specifically, a POSITA would have found it obvious that Hoblingre's appliance could be a handheld appliance, and that Hoblingre's improved bayonet attachment mechanism could be used in a handheld hair care appliance as taught in Maclaine. *Id.*, ¶124.

Maclaine explains that the "twist lock joint" used in its handheld hair care appliance is just "one example of a fixing mechanism," and that "it [would] be apparent to the skilled person that other equally acceptable alternative mechanisms could be used." *Id.*, [0092]. It would have been obvious to a POSITA to use the attachment mechanism disclosed by Hoblingre in a hair care appliance as taught in Maclaine, as such a modification is a simple substitution. Indeed, Hoblingre's bayonet coupling mechanism is a twist lock mechanism similar to the mechanism disclosed in Maclaine. Ex. 1003, ¶¶51-53. Furthermore, implementing the secure

bayonet attachment mechanism of Hoblingre in a hair care appliance would advantageously provide a more secure connection that is "capable of transmitting torques in either direction whatever be the magnitude thereof" when using the attachment, which is rotated through hair during use to detangle and create curls and waves. Ex. 1004, 1:57-62; Ex. 1003, ¶¶51-53.

A POSITA would have been motivated to implement Hoblingre's improved "coupling of the bayonet type" that "ensures a connection with no axial or angular clearance permitting, on one hand, the transmission of even large torques and, on the other hand, the establishment of the connection by a single shifting and being capable of being disassembled at any moment" in a handheld hair care appliance. Ex. 1004, 1:28-35. For example, Maclaine discloses a variety of "heads" or attachments that are interchangeable and can be attached to a hair care appliance body. Each of the multiple attachments performs different functions, and a user of the hair care appliance would have been likely to use multiple attachments—for example, first to detangle and dry, and then to curl and style—and would have wanted to switch attachments out quickly and efficiently. Ex. 1003, ¶124. Thus, a POSITA reviewing the hair care appliance system of Maclaine would have found implementing an easy and efficient attachment mechanism that is "extremely reliable and safe," "does not require any precise handling," and is "very easily

dismantled" in a handheld hair care appliance desirable and would have been motivated to do so. Ex. 1004, 3:24-40.

A POSITA would have understood that there were a variety of known bayonet coupling mechanisms, including the mechanism discussed in Hoblingre. Ex. 1003, ¶125. Further, a POSITA would have understood that implementing Hoblingre's bayonet coupling mechanism in a handheld hair care appliance as taught by Maclaine would have achieved Hoblingre's stated goal of providing a simple, reliable, and easy to disable mechanism while improving the usability of a hair care appliance used by rotating it through hair. Ex. 1004, 3:24-40; Ex. 1003, ¶125.

Hoblingre explains that "[c]ouplings of this type are well known and employed in many fields," Ex. 1004, 1:13-14, and Maclaine teaches that for its fixing mechanism between the attachment and the body, "it will be apparent to the skilled person that other equally acceptable alternative mechanisms could be used." Ex. 1007, [0092]. Thus, the combination of Hoblingre and Maclaine with respect to the attachment mechanism is nothing more than the use of a known technique (a coupling mechanism according to Hoblingre) to improve devices (handheld hair care appliances as taught in Maclaine) in the same way to yield predictable results (a fast, simple, and reliable coupler mechanism). Ex. 1003, ¶126.

Furthermore, it would have been obvious to a POSITA to use the attachment assembly disclosed in Hoblingre in a hair care appliance as disclosed by Maclaine

since such a modification is a simple substitution. Ex. 1003, ¶127. Maclaine and other prior disclosures of handheld hair care appliances already contemplate the use of a bayonet coupling. And, as Hoblingre explains, bayonet couplings have been known and employed in various different fields for decades as a simple, reliable solution for assembling two elements. A POSITA would have had a reasonable expectation of success in implementing a simple substitution of one type of bayonet coupling for another, more robust type of bayonet coupling, to achieve a more secure connection. *Id.* Therefore, a POSITA would have been motivated to utilize the attachment mechanism of Hoblingre in a handheld hair care appliance to provide a more secure, simple connection. *Id.*

2. Detailed Analysis of Ground 2

a. Element 1[pre]: "A handheld appliance"

To the extent the preamble is found limiting, Hoblingre in view of Maclaine renders this claim element obvious. Ex. 1003, ¶¶128-129. Maclaine discloses a head, or "an attachment," "for a hand held appliance, in particular a hair care appliance such as a hot styling brush." Ex. 1007, [0002].

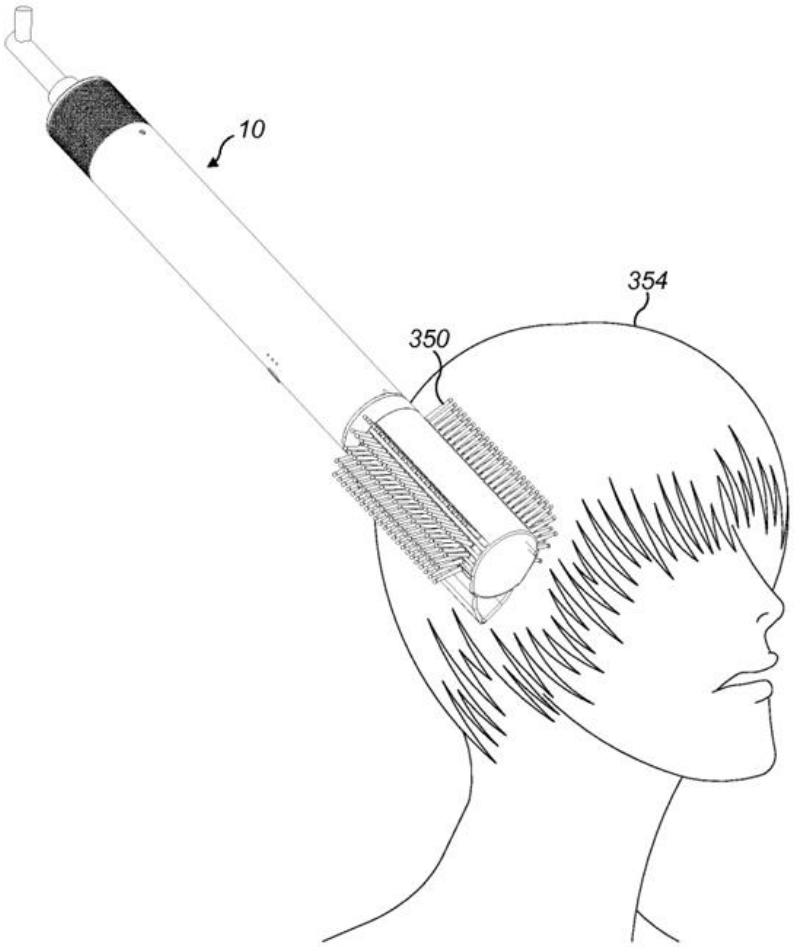

FIG. 14

Id., FIG. 1.

b. Claim 15: "The appliance of claim 1, wherein the body has a first end and a second end and the attachment mechanism is adjacent the second end."

Hoblingre discloses the elements of claims 1 and 15. *See* Sections IV.A.2.a-f, IV.A.2.o; Ex. 1003, ¶¶60-86. To the extent that Hoblingre is not found to disclose this element, Hoblingre in view of Maclaine teaches this limitation of claim 15. Ex. 1003, ¶¶130-131. Maclaine teaches that the body of its handheld hair care appliance, handle 20, includes "one end 24," a first end (illustrated by a blue arrow), and a

"distal end 22," a second end (illustrated by a red arrow). Ex. 1007, [0046]-[0047]. Maclaine's slot 90 that engages the protrusions on the internal surface of its attachment 30 and those protrusions collectively constitute Maclaine's "twist lock joint" and are located at the "distal end 22" of the body of Maclaine's handheld hair care appliance. *Id.*, [0046]-[0047].

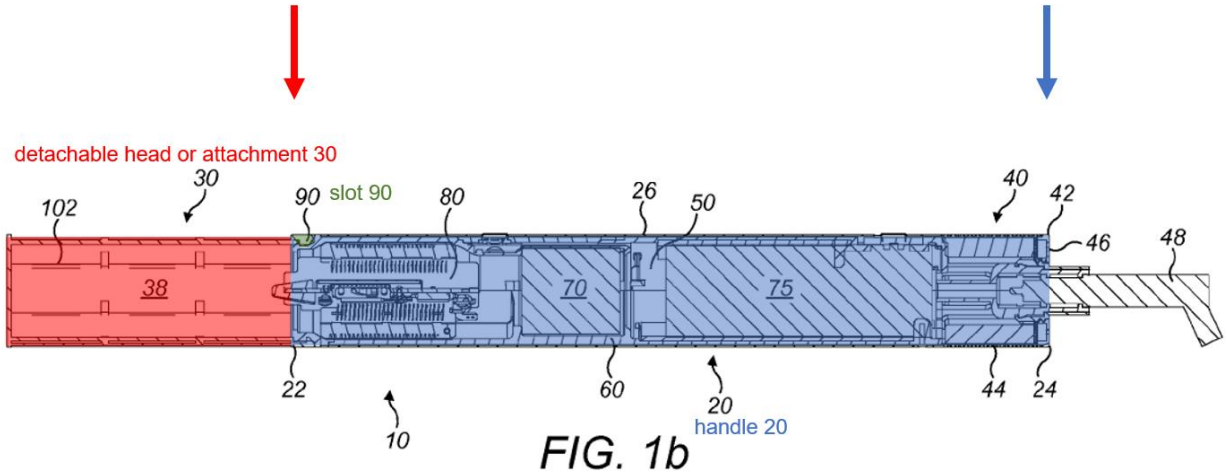

Id., FIG. 1b (annotated).

For the reasons explained in Section IV.B.1.b (incorporated herein by reference), a POSITA would have been motivated to combine Hoblingre and Maclaine and would have had a reasonable expectation of success in making the combination. Ex. 1003, ¶¶124-127, 131. Thus, the combination of Hoblingre and Maclaine renders claim 18 obvious. *Id.*

c. Claim 18: "The appliance of claim 1, wherein the attachment comprises a collar extending around the

attachment and the first protrusion extends from the collar."

Hoblingre discloses the elements of claim 1 as discussed above. *See* Section IV.A.2.a-f; Ex. 1003, ¶¶60-86. Hoblingre in view of Maclaine teaches this additional limitation of claim 18. Ex. 1003, ¶¶132-135. For example, Maclaine discloses that its attachment "head" is connected to the handle "via a collar and a twist lock joint." Ex. 1007, [0092]. Maclaine's attachment collar includes "three protrusions" on "the internal surface of the collar" adapted to "engage a slot 90 (*see* FIG. 1*b*)" or "three separate slots provided near the distal end" of the handle. *Id.*, [0092]. Although the "protrusions" are not shown in Figure 7b—the figure with respect to which the protrusions are discussed—the protrusions (illustrated in purple) are shown on the internal surface of the collar (illustrated in light blue) in various other figures in Maclaine, such as Figure 3b, reproduced below.

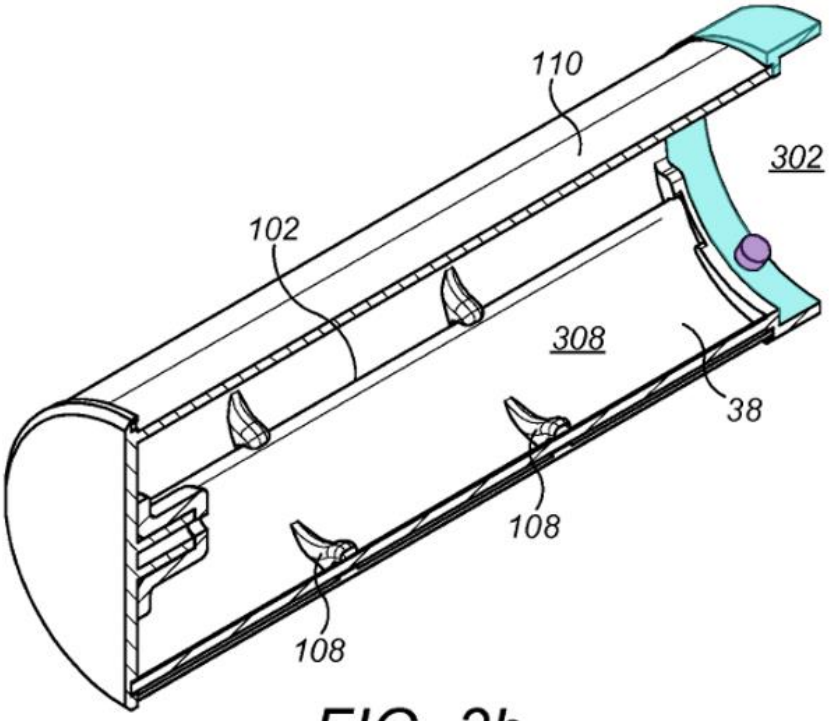

FIG. 3b

Id., FIG. 3b (annotated).

Maclaine's slot 90, with which the protrusions on the internal surface of the collar of the attachment 30, are configured to engage, is located on the "distal end 22" of the handle 20, or body, of its handheld hair care appliance, and is illustrated below in green.

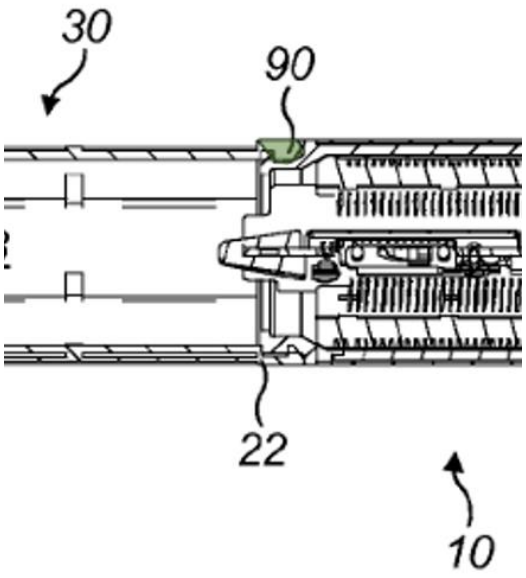

Id., FIG. 1b (excerpt, annotated).

For the reasons explained in Section IV.B.1.b (incorporated herein by reference), a POSITA would have been motivated to combine Hoblingre and Maclaine and would have had a reasonable expectation of success in making the combination. Ex. 1003, ¶¶124-127, 132-135. Thus, the combination of Hoblingre and Maclaine renders claim 18 obvious. *Id.*

d. Claim 30: "The appliance of claim 1, wherein the appliance is a hair care appliance."

Hoblingre discloses the elements of claim 1 as discussed above. *See* Sections IV.A.2.a-f; Ex. 1003, ¶¶60-86. Hoblingre in view of Maclaine teaches this additional limitation of claim 30. Ex. 1003, ¶136. For example, Maclaine discloses "a hair care appliance." Ex. 1007, [0002]-[0007], [0019]-[0020]. For the reasons explained in Section IV.B.1.b (incorporated herein by reference), a POSITA would

have been motivated to combine Hoblingre and Maclaine and would have had a reasonable expectation of success in making the combination. Ex. 1003, ¶¶124-127, 136. Thus, the combination of Hoblingre and Maclaine renders claim 30 obvious. *Id.*

e. Claim 31: "The appliance of claim 30, wherein the hair care appliance is a hot styling appliance."

Hoblingre in view of Maclaine renders obvious claim 30 as discussed above. *See* Section IV.B.2.d; Ex. 1003, ¶136. Hoblingre in view of Maclaine teaches this additional limitation of claim 31. Ex. 1003, ¶¶137-138. For example, Maclaine discloses that the hair care appliance can be "a hot styling appliance such as a hot styling brush." Ex. 1007, [0002]-[0007], [0019]-[0020]. For the reasons explained in Section IV.B.1.b (incorporated herein by reference), a POSITA would have been motivated to combine Hoblingre and Maclaine and would have had a reasonable expectation of success in making the combination. Ex. 1003, ¶¶124-127, 137-138. Thus, the combination of Hoblingre and Maclaine renders claim 31 obvious. *Id.*

C. Ground 3: Hoblingre in View of Maclaine and Jeannet Renders Obvious Claims 1-9, 15, 18, 23-24 and 30-34

1. Overview of Ground

Jeannet discloses an attachment mechanism for attaching an attachment (toothbrush head) to a body (toothbrush body). The combination of Hoblingre in view of Maclaine and Jeannet additionally renders obvious claims 33 and 34 of the

'660 patent. Petitioners incorporate by reference the analysis of Grounds 1 and 2 above. *See supra.*

a. Summary of Jeannet

Jeannet discloses an attachment mechanism for attaching an attachment (toothbrush head) to a body (toothbrush handle). Ex. 1008, Abstract. Jeannet "improve[s] a toothbrush of the known generic type" by providing a "firm, reliable connection between the brush head and the brush handle" in the longitudinal direction during use while also allowing the brush head to be "released again relatively easily from the brush handle and, if required, replaced by a new brush head." *Id.*, 1:29-36. Jeannet implements a "bayonet catch" as the "releasable connection" between the brush head and the brush handle. *Id.*, 1:38-57. To increase the ease with which the bayonet catch can be released, Jeannet discloses an unlocking button 121 on the toothbrush handle that allows the bayonet catch to be moved out of the locked position and released from the toothbrush head. *Id.*, 1:29-57; 4:6-33; Ex. 1003, ¶¶54-56. Jeannet is in the same field of endeavor (attachment mechanisms for appliances) as the claimed invention, and specifically relates to handheld appliances. Ex. 1003, ¶¶54-56. To the extent that the field of endeavor is determined to be hair care appliances, Jeannet is reasonably pertinent to the problem faced by the inventor, which is attachment mechanisms for easy engagement and disengagement of two components. *Id.*

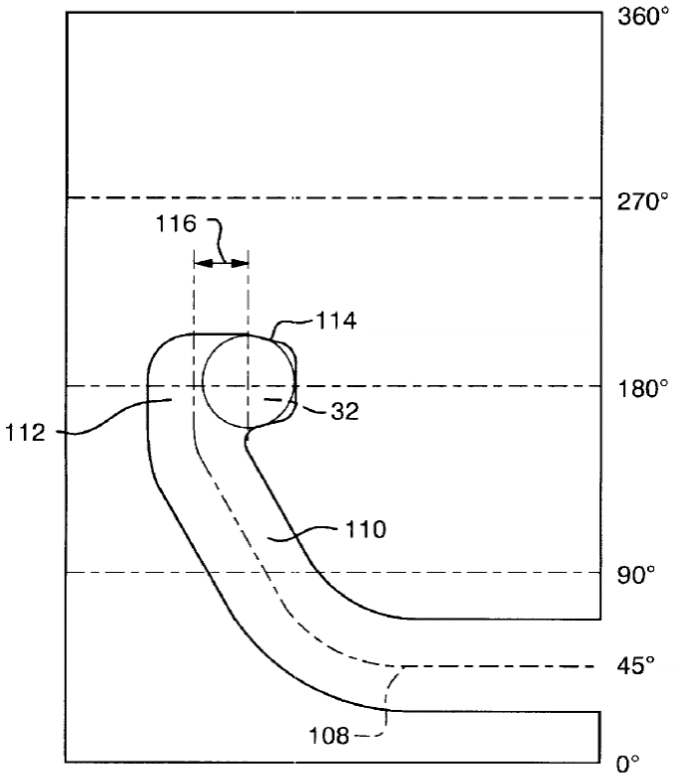

FIG. 6

Ex. 1008, FIG. 6.

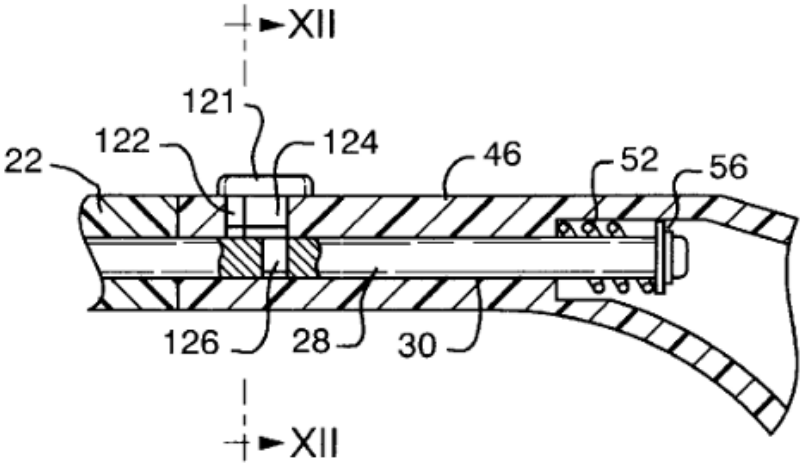

FIG. 10

Id., FIG. 10.

b. Motivation to Combine Hoblingre, Maclaine, and Jeannet

See Section IV.B.1.b (incorporated herein by reference). A POSITA would have been motivated to combine Hoblingre and Maclaine, and would have had a reasonable expectation of success in doing so. Ex. 1003, ¶¶124-127. Additionally, a POSITA would have been motivated to incorporate Jeannet's unlocking button 121 into the combined Hoblingre and Maclaine system. *Id.*

A POSITA would have understood that an unlocking interface in the form of an unlocking button, when combined with Hoblingre and Maclaine's handheld hair care appliance, would achieve the benefits of providing a "relatively eas[y]" way to release the bayonet coupling between the body and attachment of the combined system. Ex. 1008, 1:29-36; Ex. 1003, ¶141.

Furthermore, it would have been obvious to a POSITA to modify the combined system of Hoblingre and Maclaine to use an unlocking button as disclosed in Jeannet, since such a modification is a simple addition. Ex. 1003, ¶142. The combined system of Hoblingre and Maclaine already uses a bayonet coupling, and the implementation of Jeannet's unlocking button would require only adding Jeannet's button 121 to the outside of Hoblingre's ring 18. Both mechanisms function in the same manner (*i.e.*, they slide longitudinally) to achieve the same results, namely moving a protrusion to releasing an attachment mechanism. *Id.* A

POSITA would have had a reasonable expectation of success in implementing a simple addition of one component of a bayonet coupling to another that performs the same function to achieve a simpler, easier to use unlocking mechanism. Therefore, a POSITA would have been motivated to implement the unlocking interface of Jeannet in the combined Hoblingre and Maclaine handheld hair care appliance. *Id.*

2. Detailed Analysis of Ground 3

a. Element 33[pre]: "A handheld appliance"

See Sections IV.A.2.a, IV.B.2.a, IV.C.1.b (incorporated herein by reference). The preamble term "handheld" is not limiting, and without the "handheld" preamble phrase, Element 33[pre] recites "[a]n appliance." Hoblingre discloses this limitation. Ex. 1003, ¶¶61-65. To the extent the preamble is found limiting, Hoblingre in view of Maclaine and Jeannet renders this claim element obvious. Ex. 1003, ¶¶143-148.

b. Element 33[a]: "having a body and an attachment"

See Sections IV.A.2.b, IV.C.1.b (incorporated herein by reference). The Hoblingre, Maclaine, and Jeannet combination renders this limitation obvious. Ex. 1003, ¶¶66-71, 140-142, 149.

c. Element 33[b]: "the body comprising an attachment mechanism having a first slot and an actuator"

See Sections IV.A.2.c, IV.C.1.b (incorporated herein by reference). The Hoblingre, Maclaine, and Jeannet combination renders this limitation obvious. Ex. 1003, ¶¶72-76, 140-142, 150.

d. Element 33[c]: "the attachment comprising a first protrusion configured to engage with the first slot"

See Sections IV.A.2.d, IV.C.1.b (incorporated herein by reference). The Hoblingre, Maclaine, and Jeannet combination renders this limitation obvious. Ex. 1003, ¶¶77-80, 140-142, 151.

e. Element 33[d]: "wherein the actuator has a first position and a second position and the actuator is slidably moved from the first position towards the second position in a longitudinal direction of the body as the first protrusion engages with the first slot"

See Section IV.A.2.e, IV.C.1.b (incorporated herein by reference). The Hoblingre, Maclaine, and Jeannet combination renders this limitation obvious. Ex. 1003, ¶¶81-83, 140-142, 152.

f. Element 33[e]: "further comprising a user operated button which engages with the actuator."

Hoblingre in view of Maclaine and Jeannet renders this limitation obvious. Ex. 1003, ¶¶153-158. Jeannet discloses a "bayonet catch" for attaching an attachment (toothbrush head) to a body (toothbrush body). Ex. 1008, Abstract. As shown below, the toothbrush body has a locking pin 28 that is biased toward the

toothbrush head end by a helical spring 52, and that has a bayonet stud 32 on the end that engages with a locking groove 106 formed in the toothbrush head.

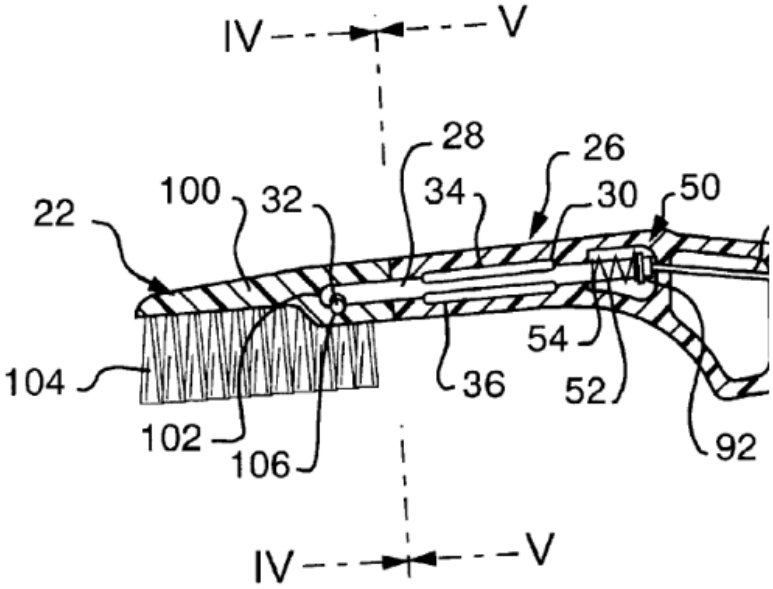

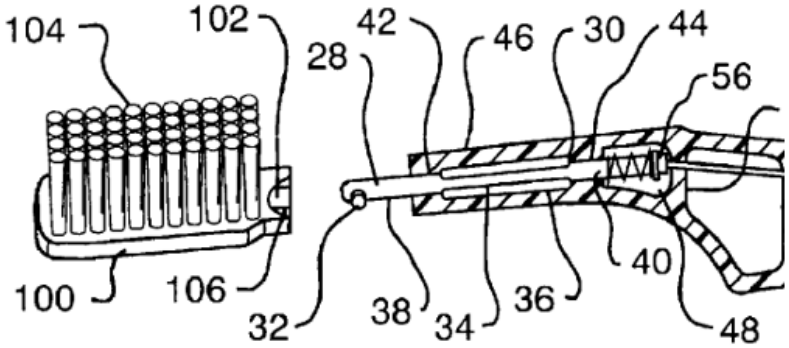

Id., FIG. 1 (top, excerpt), FIG. 2 (bottom, excerpt).

Locking groove 106 has a curved configuration, as shown below. The spring-bias force provided by helical spring 52 retains bayonet stud 32 in a lock-in portion 114 in the slot. *Id.*, 3:41-57.

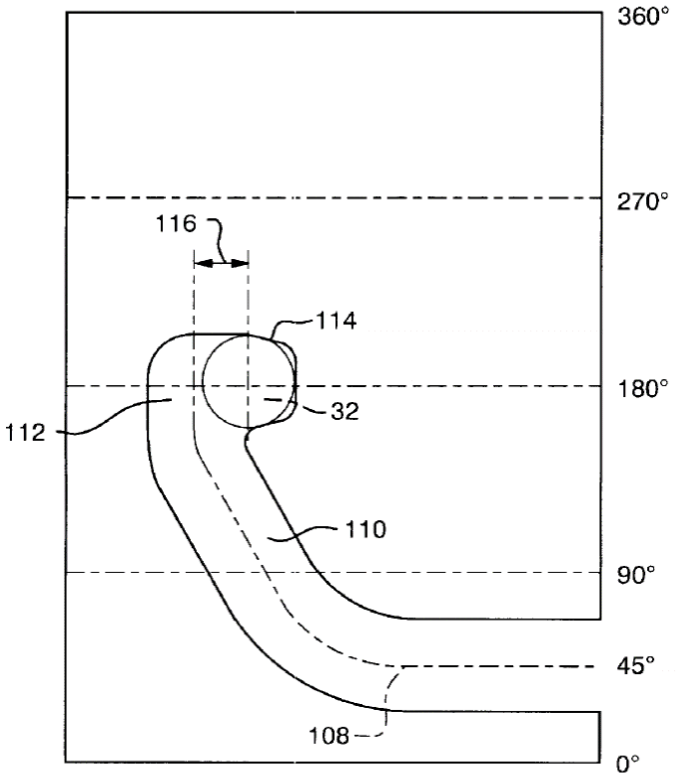

FIG. 6

Id., FIG. 6.

In one embodiment, shown in Figure 10 below, the toothbrush body includes a release mechanism in the form of an "unlocking button 121" (illustrated below in light pink) on the toothbrush body that slides longitudinally (illustrated by a light pink arrow). *Id.*, 4:6-33. Jeannet's "unlocking button 121" is attached to "a connecting pin 124 in an elongated slot 122 on the rear side of the handle neck," and the connecting pin 124 is "secured on the underside of the unlocking button 120" and "firmly connected to the locking pin 28 by means of a locking peg 126." *Id.*

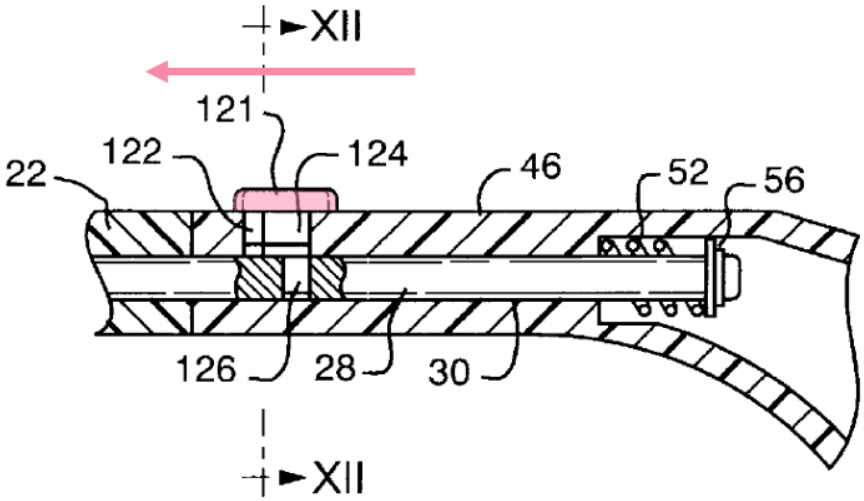

FIG. 10

Id., FIG. 10 (annotated).

Thus, when unlocking button 121 is advanced toward the toothbrush head, bayonet stud 32 can be moved out of the lock-in portion 114 and released from the toothbrush head. *Id.*, 1:29-57; 4:6-33; Ex. 1003, ¶157.

It would have been obvious to add a button to ring 18 of Hoblingre in view of Jeannet's teaching of button 121, because such a modification would be a simple addition. Both mechanisms function in the same manner (*i.e.*, they slide longitudinally) to achieve the same results, namely moving a protrusion to releasing an attachment mechanism. Ex. 1008, Fig. 10; Ex. 1003, ¶158. Thus, the combination of Hoblingre, Maclaine, and Jeannet renders "a user operated button which engages the actuator" obvious and renders claim 33 obvious. Ex. 1003, ¶¶153-158.

g. Claim 34: "The appliance of claim 33, wherein actuation of the button moves the actuator from the first position to the second position to facilitate removal of an attachment from the body."

The Hoblingre, Maclaine, and Jeannet combination renders this claim obvious. Ex. 1003, ¶¶159-160. Actuation of Jeannet's unlocking button 121 moves connecting pin 124, which is attached to locking peg 126, longitudinally, which in turn moves locking pin 28 and compresses helical spring 52, to thereby move locking peg 126 out of lock-in portion 114 in the slot, thus allowing removal of the head from the toothbrush body. Thus, actuation of Jeannet's unlocking button 121 moves its actuator (locking pin 28 and helical spring 52) from one position to another position to facilitate removal of the attachment from the body. Ex. 1008, 1:29-57; 4:6-33; Ex. 1003, ¶159. A POSITA would have understood that a button added to Hoblingre's ring 18 in view of Jeannet's teaching of button 121 would similarly move ring 18 (the actuator) from its first position (ring 18 toward the open end 10 of socket 8, with the pins 6 trapped between the edges of the slots 12 and 28), to the second position (ring 18 away from the open end 10 of socket 8 compressing coil spring 24, allowing pins 6 to be removed from between the slots 12 and 28) to facilitate removal of the attachment from the body. Ex. 1003, ¶159.

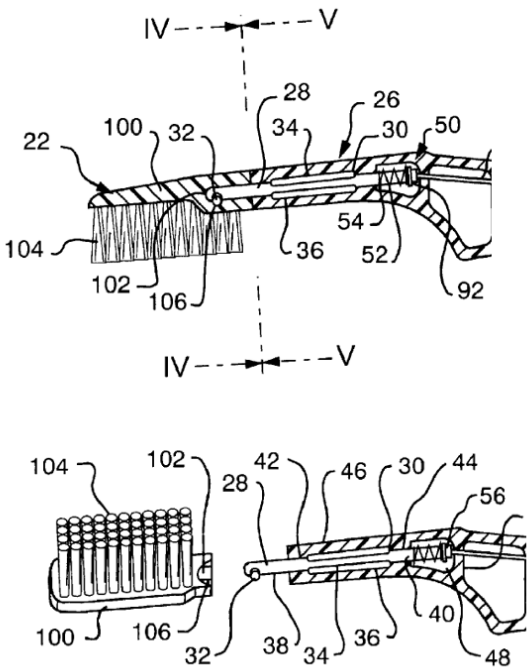

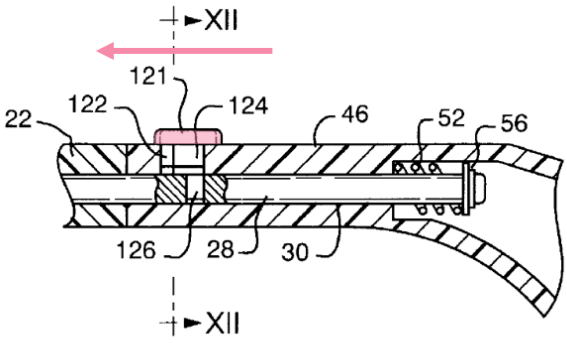

FIG. 10

Ex. 1008, FIG. 1 (left top, excerpt), FIG. 2 (left bottom, excerpt), FIG. 10 (annotated).

For the reasons explained in Section IV.C.1.b (incorporated herein by reference), a POSITA would have been motivated to combine Hoblingre, Maclaine, and Jeannet, and would have had a reasonable expectation of success in making the combination. Ex. 1003, ¶160. Thus, the combination of Hoblingre, Maclaine, and Jeannet renders claim 34 obvious. Ex. 1003, ¶¶159-160.

D. Ground 4: Mouhot Anticipates Claims 1-9, 15, 23-24, and 32

Mouhot discloses every element of claims 1-9, 15, 23-24, and 32. Ex. 1003, ¶¶161-219. Mouhot therefore anticipates those claims.

1. Overview of Ground

a. Summary of Mouhot

Mouhot discloses a "bayonet" coupling mechanism for connecting "two members." Ex. 1005, [0001]-[0002]. This "quick coupler" mechanism improves on coupling mechanisms "known in the prior art" by disclosing a mechanism that is simple and inexpensive to produce relative to existing mechanisms. *Id.*, [0005]-[0006]. The mechanism comprises a "socket" having "at least one slot for receiving a lateral protruding part of" the other member and "means for locking" to lock in position "the lateral protruding part," of the other member within in the slot to create a secure attachment. *Id.*, [0002]. Although Mouhot is primarily directed to a coupling mechanism used to connect two vehicle steering components, Mouhot contemplates that its mechanism can be used in "numerous applications." *Id.*, [0029]. Mouhot is in the same field of endeavor (attachment mechanisms for appliances) as the claimed invention. Ex. 1003, ¶¶48-50. To the extent that the field of endeavor is determined to be handheld or hair care appliances, Mouhot is reasonably pertinent to the problem faced by the inventor, which is attachment mechanisms for easy engagement and disengagement of two components. *Id.*

2. Detailed Analysis of Ground 4

a. Element 1[pre]: "A handheld appliance"

See Section IV.A.2.a (incorporated herein by reference). The preamble term "handheld" is not limiting, and without the "handheld" preamble phrase, Element

1[pre] recites "[a]n appliance," a generic term signaling an apparatus claim. Mouhot discloses this limitation.[4] Ex. 1003, ¶¶162-166. Mouhot discloses a "bayonet-type quick coupler" for connecting two components of a system, i.e., an appliance. Ex. 1005, [0001]. Although Mouhot contemplates that its quick coupler is particularly useful "in the automotive industry, for connecting two steering members," it explicitly states that "such a coupler can find numerous applications." *Id.*, [0029].

b. Element 1[a] "having a body and an attachment"

Mouhot discloses this limitation. Ex. 1003, ¶¶167-169. Mouhot's quick coupler connects two components: (1) a first component comprising socket 2 and locking means 4, illustrated below in blue and (2) a second component comprising shank 3, illustrated below in red. Ex. 1005, [0010]-[0011].

---

[4] It would have been obvious to use the attachment system of Mouhot in a handheld appliance. Accordingly, if the preamble is found to be limiting, then the claims should be found unpatentable as obvious as set forth in Grounds 5 and 6. Ex. 1003, ¶65.

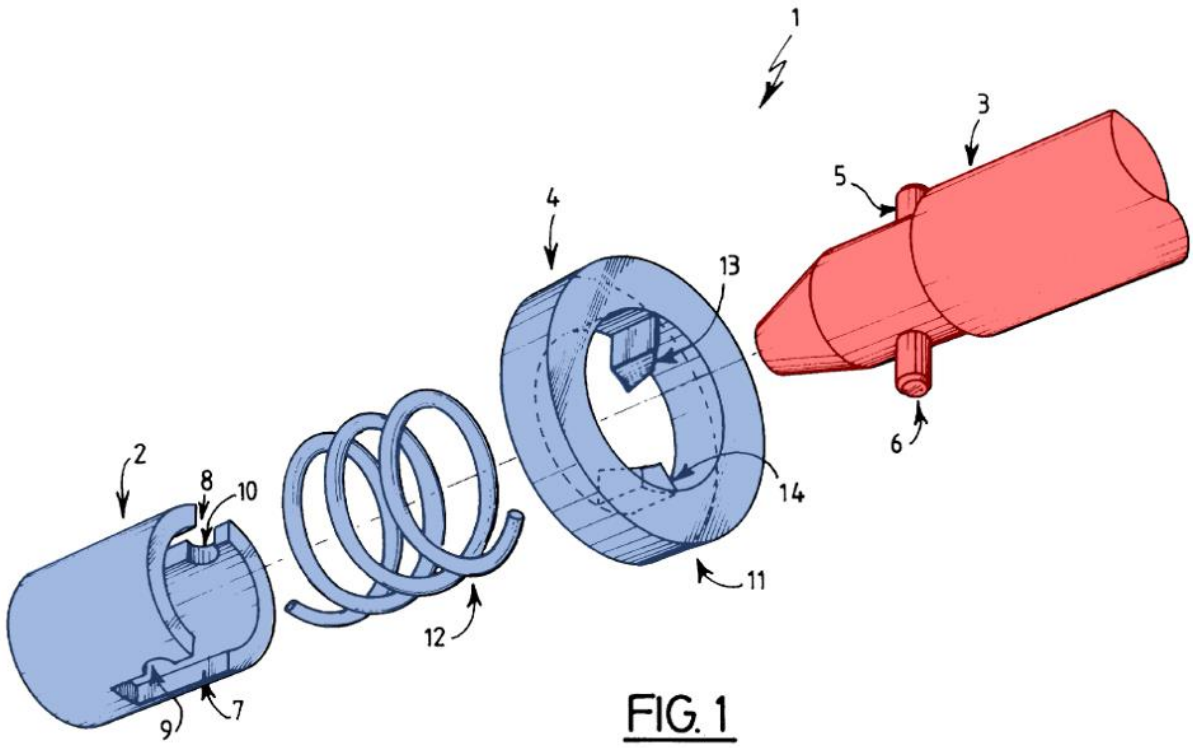

Id., FIG. 1 (annotated).

Mouhot's component comprising socket 2, which receives shank 3, and locking means 4 "for locking" "shank 3 in position," discloses a body. *Id.*, [0011]. Mouhot's component comprising a shank 3, which is inserted into and then locked in position within socket 2 by locking means 4, discloses an attachment. *Id.*, [0011].

c. Element 1[b] "the body comprising an attachment mechanism having a first slot and an actuator"

Mouhot discloses this limitation. Ex. 1003, ¶¶170-176. Mouhot's component comprising socket 2 and locking means 4 together disclose a body. Socket 2 and locking means 4 together disclose an attachment mechanism.

Socket 2 includes slots 7 and 8, the boundaries of which are "delimit[ed]" by the sides of socket 2. Ex. 1005, [0007], [0013]. One of the slots, slot 7, is illustrated in a side view of Mouhot's appliance below in blue. The sides of socket 2 that define slots 7 and 8 also define "lateral recess[es]" "stop means" 9 and 10 that extend "lateral[ly]" from the corresponding slots 7 and 8. *Id.*, [0014]-[0015]. One of the laterally extending stop means, stop means 9, is illustrated below in yellow.

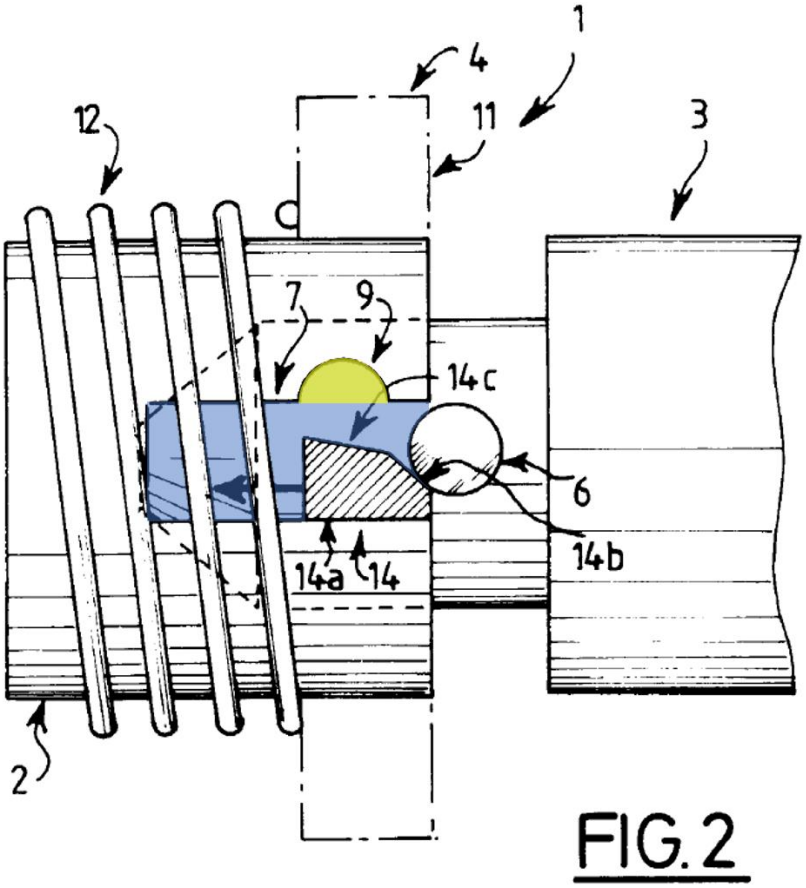

Id., FIG. 2 (annotated).

Together, slot 7 and corresponding stop means 9, which extends from slot 7, constitute a single "first slot" as illustrated below in green. Ex. 1003, ¶174.

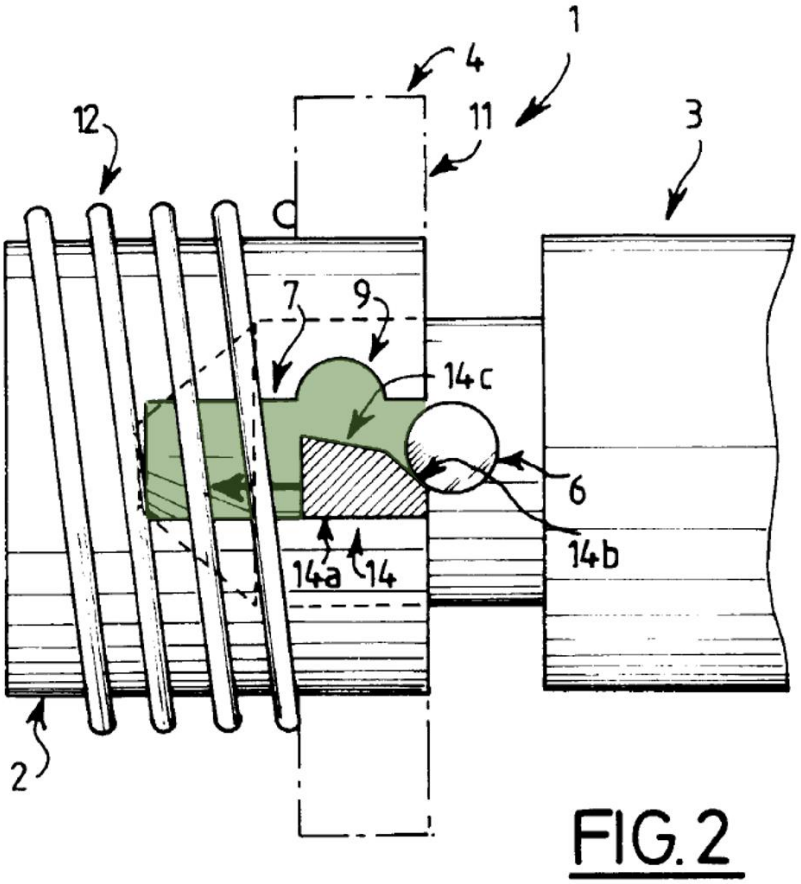

Ex. 1005, FIG. 2 (annotated).

Mouhot's socket 2 includes at least 2 slots—the first slot comprising the combination of slot 7 and stop means 9 on one side, and the combination of slot 8 and stop means 10 on the other side, as illustrated below. Ex. 1003, ¶175.

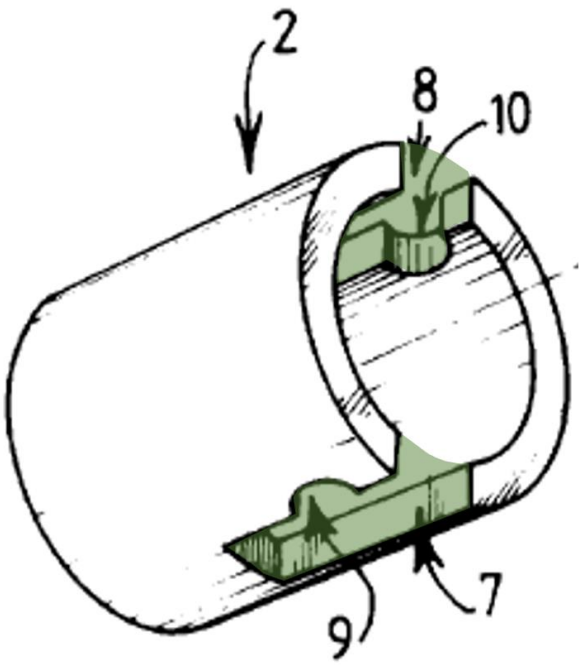

Ex. 1005, FIG. 1 (excerpt, annotated).

Mouhot's locking means 4 comprises ring 11, illustrated below in red, and coil spring 12, illustrated below in orange. *Id.*, [0016]-[0017]. Coil spring 12 biases ring 11 "towards its locking position," while "wedge-shaped" projections that "protrude radially toward the inside of the ring" and "extend into the slots of the socket." *Id.*, [0016]-[0017]. Locking means 4 constitutes an actuator. Ex. 1003, ¶176.

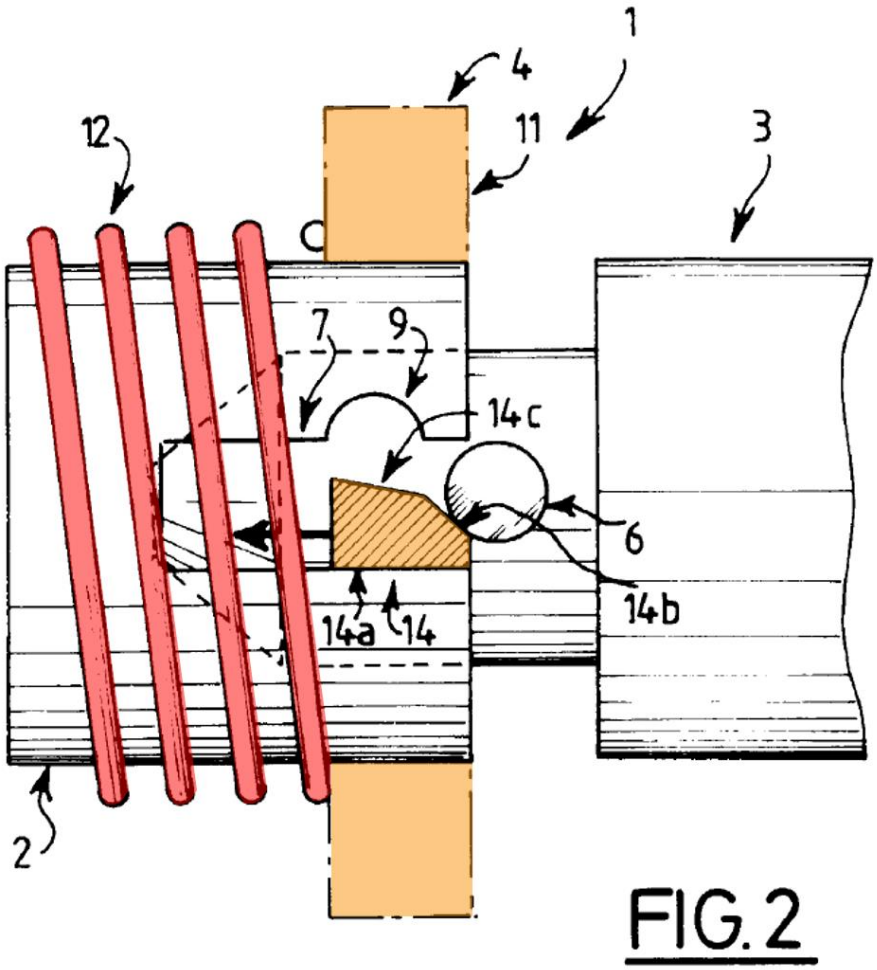

Ex. 1005, FIG. 2 (annotated).

d. Element 1[c] "the attachment comprising a first protrusion configured to engage with the first slot"

Mouhot discloses this limitation. Ex. 1003, ¶¶177-179. Mouhot's component comprising shank 3 discloses an attachment. Shank 3 comprises "two lateral diametrically opposite protruding parts 5 and 6," which are "adapted to be inserted into two corresponding slots 7, 8" and the corresponding stop means 9, 10 of socket 2. *Id.*, [0012]-[0015], [0019]. These laterally protruding parts, or protrusions, 5 and 6, are illustrated below in purple.

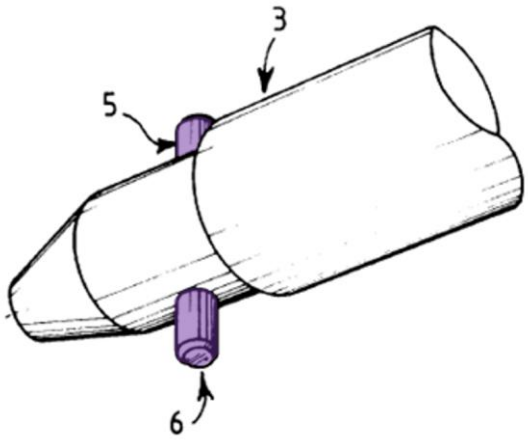

Id., FIG. 1 (excerpt, annotated).

At least one locked position of protrusions 5, 6 is "delimit[ed]" by the corresponding stop means 9, 10. *Id.*, [0014]. As discussed above, the combination of Mouhot's slot 7 and stop means 9 constitutes a first slot. Thus, lateral protruding part 6 (illustrated below in purple), which engages with the first slot (illustrated below in green), constitutes a first protrusion.

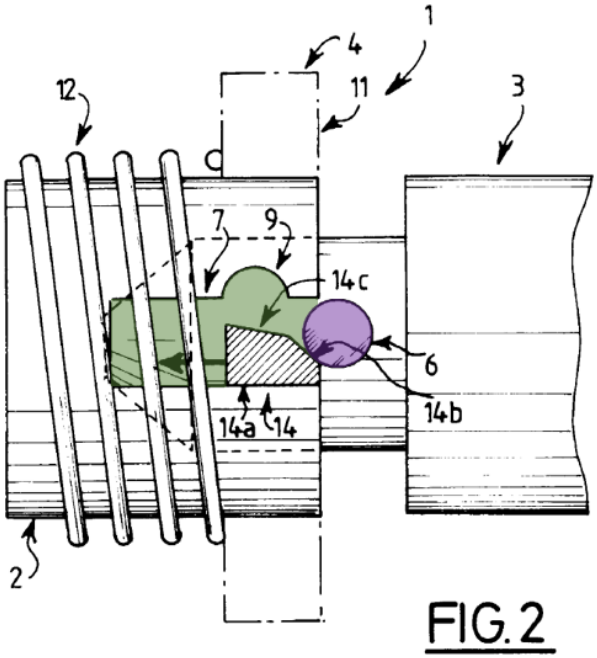

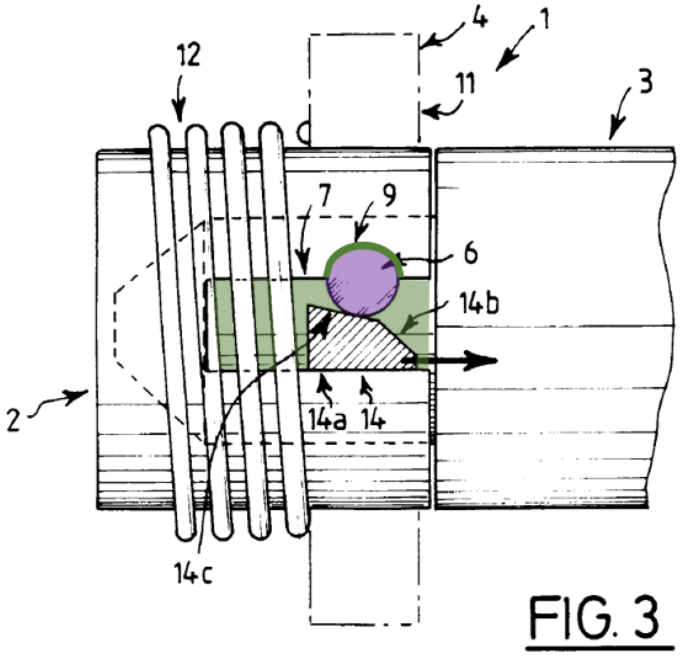

Id., FIGS. 2, 3 (annotated).

e. Element 1[d] "wherein the actuator has a first position and a second position and the actuator is slidably moved from the first position towards the second

position in a longitudinal direction of the body as the first protrusion engages with the first slot"

Mouhot discloses this limitation. Ex. 1003, ¶¶180-182. Mouhot's locking means 4 discloses an actuator. Mouhot discloses that locking means 4 is slidable (in a longitudinal direction of the body illustrated below in red) between a first position (ring 11 positioned at the end of socket 2 farthest from coil spring 12) as shown in Figure 2 and a second position (ring 11 compressing coil spring 12). *Id.*, [0019]-[0021].

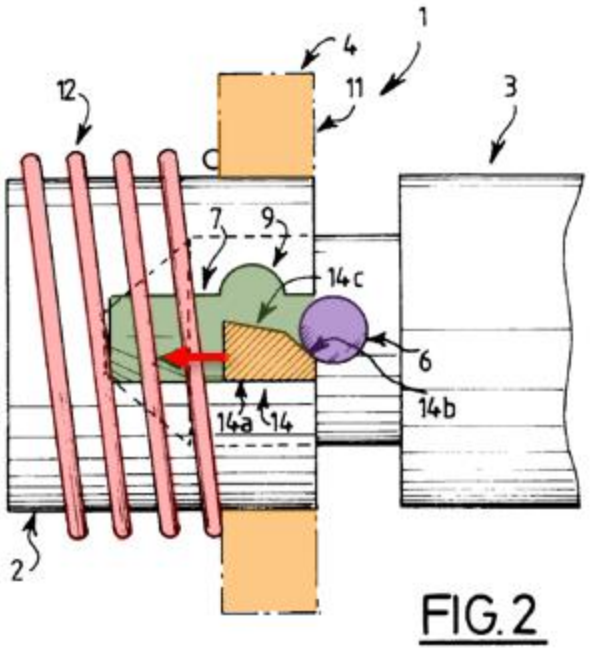

Id., FIG. 2 (annotated).

When moving from the first position illustrated above in Figure 2 to the second position, ring 11 slides along a longitudinal direction of socket 2 (illustrated above by the red arrow in Figure 2), compressing coil spring 12. Ex. 1003, ¶182.

As ring 11 compresses coil spring 12 and continues sliding along the longitudinal direction, lateral protruding part 6 enters the first slot comprising the combination of slot 7 and stop means 9. Ex. 1005, [0013]-[0014].

f. Element 1[e] "wherein the body extends along a longitudinal axis and the first slot extends both radially around and axially along the body."

Mouhot discloses this limitation. Ex. 1003, ¶¶183-184. Mouhot's socket 2 and locking means 4 together constitute a body. As shown below in annotated Figures 1-3, Mouhot's socket 2 extends along a longitudinal axis illustrated in pink. Slots 7, 8, described as "axial slots," also extend along a longitudinal axis (and thus, axially) along socket 2, as illustrated below in pink. Ex. 1005, [0013]-[0015]. Stop means 9, 10 extend "lateral[ly]" from slots 7, 8 (and thus extend radially) around socket 2, as illustrated below in yellow. *Id.*, [0013]-[0015].

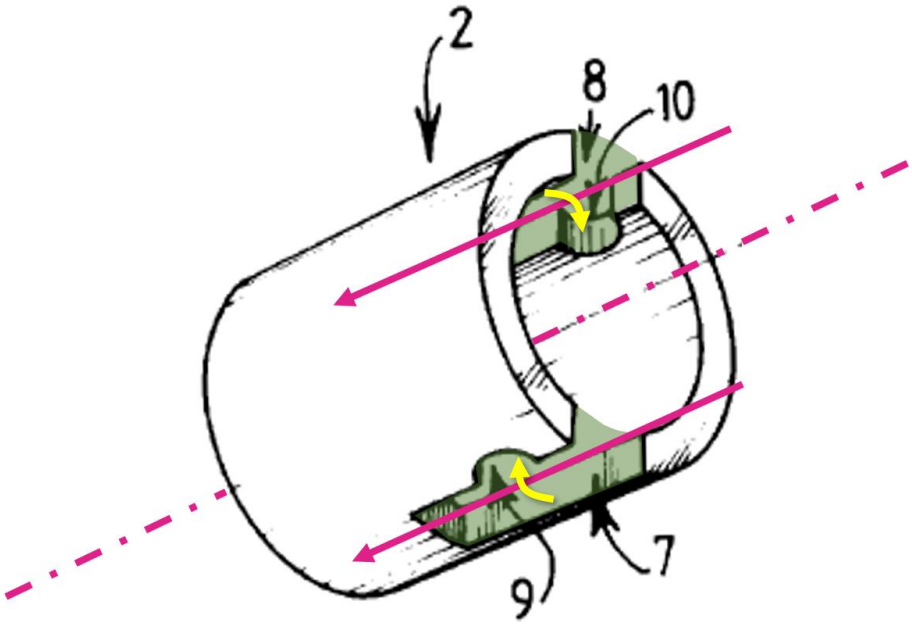

Id., FIG. 1 (excerpt, annotated).

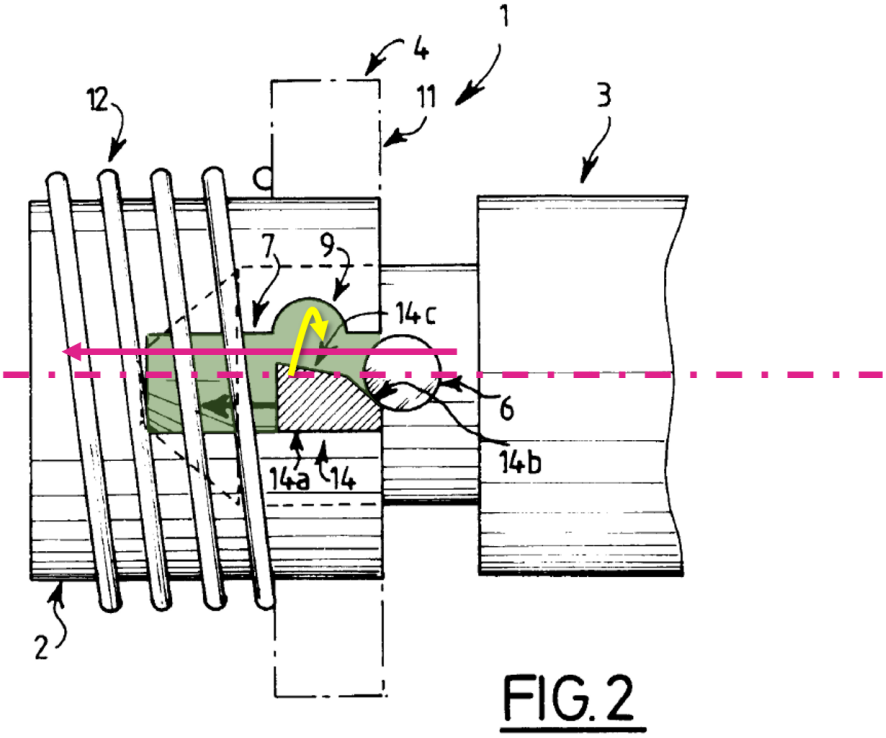

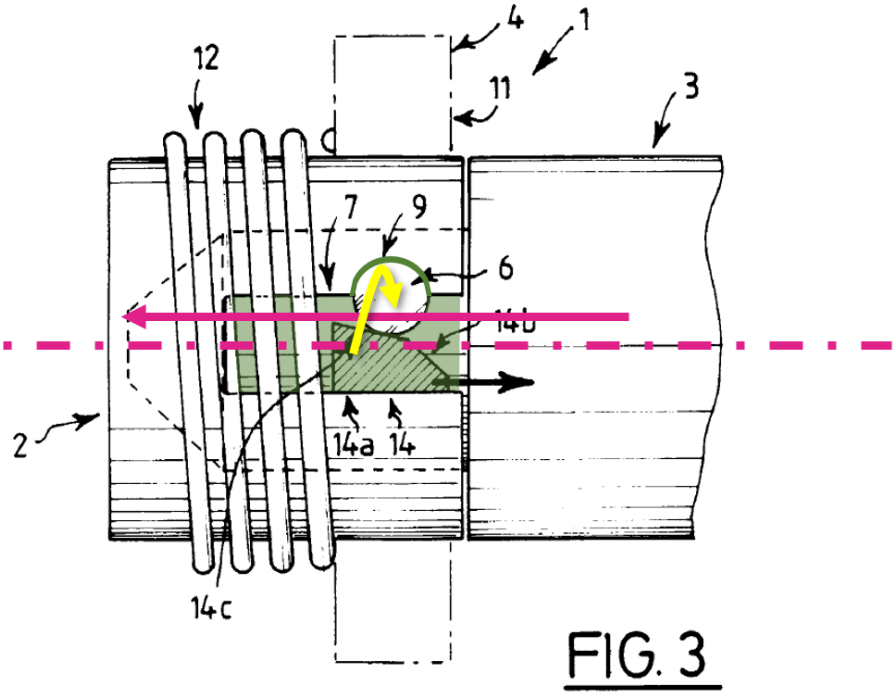

Id., FIGS. 2, 3 (annotated).

Thus, Mouhot discloses each element of claim 1 and anticipates claim 1. Ex. 1003, ¶¶162-184.

g. Claim 2: "The appliance of claim 1, wherein in the first position, the actuator at least partially obscures the first slot."

Mouhot discloses this claim. Ex. 1003, ¶¶185-186. Mouhot's locking means 4 constitutes an actuator. Mouhot discloses that wedge-shaped means 13, 14 of ring 11, partially obscures the slots comprising the combination of slots 7, 8 and stop means 9, 10. Ex. 1005, [0017]-[0021]. As illustrated in Figure 2 below, with respect to the first slot (illustrated in green) and the first protrusion (illustrated in purple), a portion of the actuator (illustrated in orange) of ring 11 partially obscures the first slot when the actuator is in the first position (ring 11 positioned at the end of socket 2 farthest from coil spring 12). *Id.*, [0017]-[0021]. The first protrusion cannot enter the first slot without interacting with wedge-shaped means 14. *Id.*, [0017]-[0021]; Ex. 1003, ¶186.

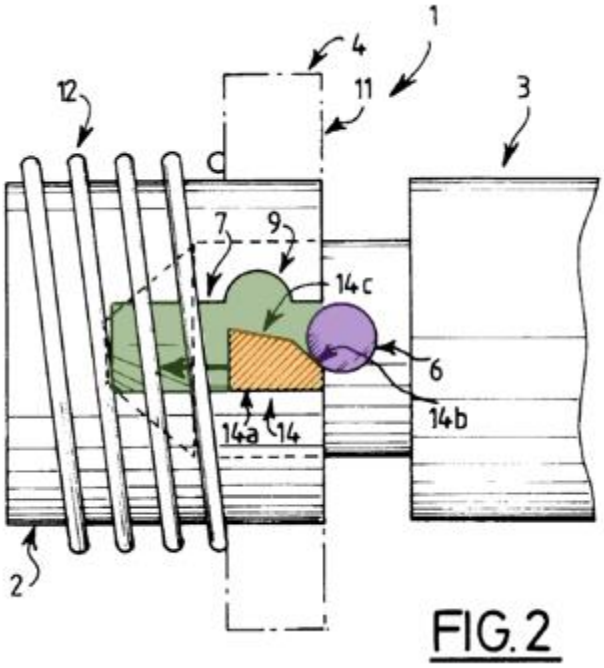

Ex. 1005, FIG. 2 (annotated).

h. Claim 3: "The appliance of claim 1, wherein the actuator comprises a surface which interacts with the first protrusion when the first protrusion engages with the first slot."

Mouhot discloses this claim. Ex. 1003, ¶¶187-189. Mouhot's locking means 4 constitutes an actuator. Mouhot discloses that wedge-shaped means 13, 14 of ring 11, each comprise a surface that interacts with protrusions 5, 6 when the protrusions engage with the slots comprising the combination of slots 7, 8 and stop means 9, 10. Ex. 1005, [0017]-[0021]. As illustrated in Figure 2 below, with respect to the first slot and the first protrusion, a portion of the actuator has a continuous surface comprising sloped surfaces 14b and 14c that interacts with the first protrusion as it engages the first slot. *Id.*, [0017]-[0021]; Ex. 1003, ¶189.

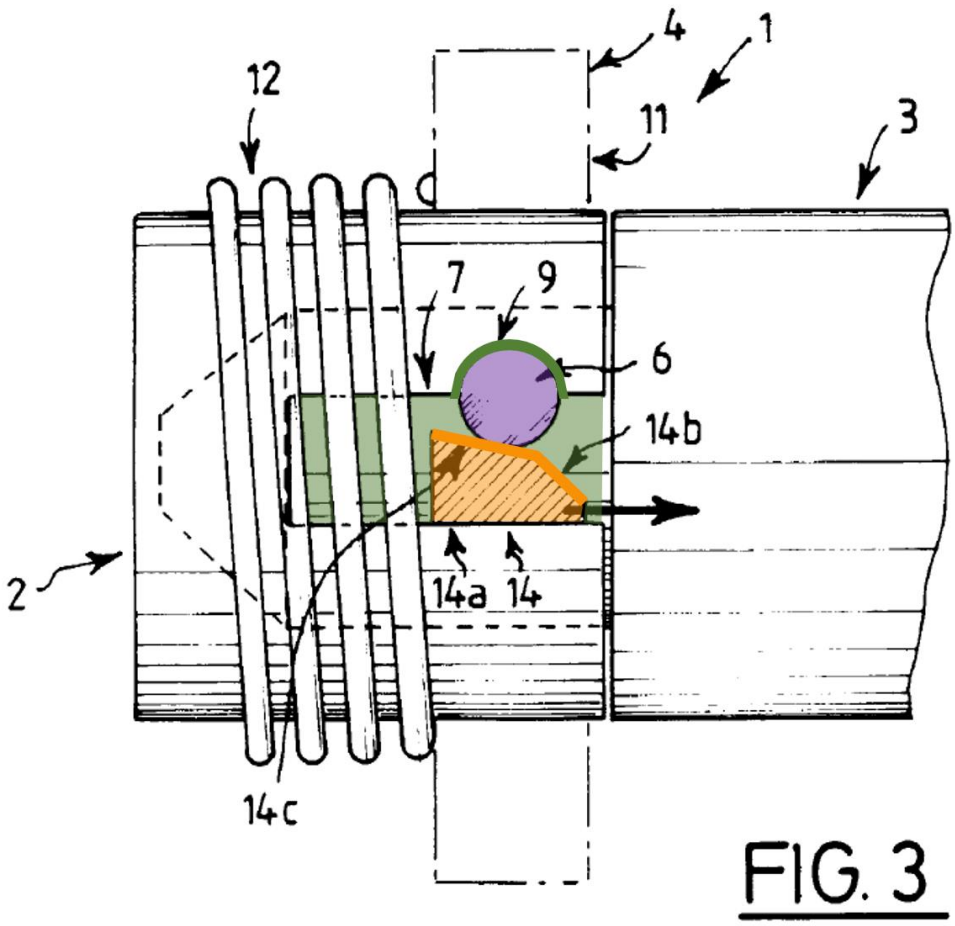

Ex. 1005, FIG. 3 (annotated).

i. Claim 4: "The appliance of claim 3, wherein the surface is configured to at least partially define the first slot at or near the second position."

Mouhot discloses this claim. Ex. 1003, ¶¶190-192. Mouhot discloses that the first protrusion engages with the first slot while in the position shown in Figure 3. In this position, which is at or near the second position (ring 11 compressing coil spring 12) the continuous surface comprising sloped surfaces 14b and 14c both obscures a portion of the first slot and interacts with lateral protruding part 6. Thus, the continuous surface of wedge-shaped means 14 effectively forms the lower wall

of the first slot, and at least partially defines the first slot, as illustrated below in bold lines. Ex. 1005, [0017]-[0021]; Ex. 1003, ¶192.

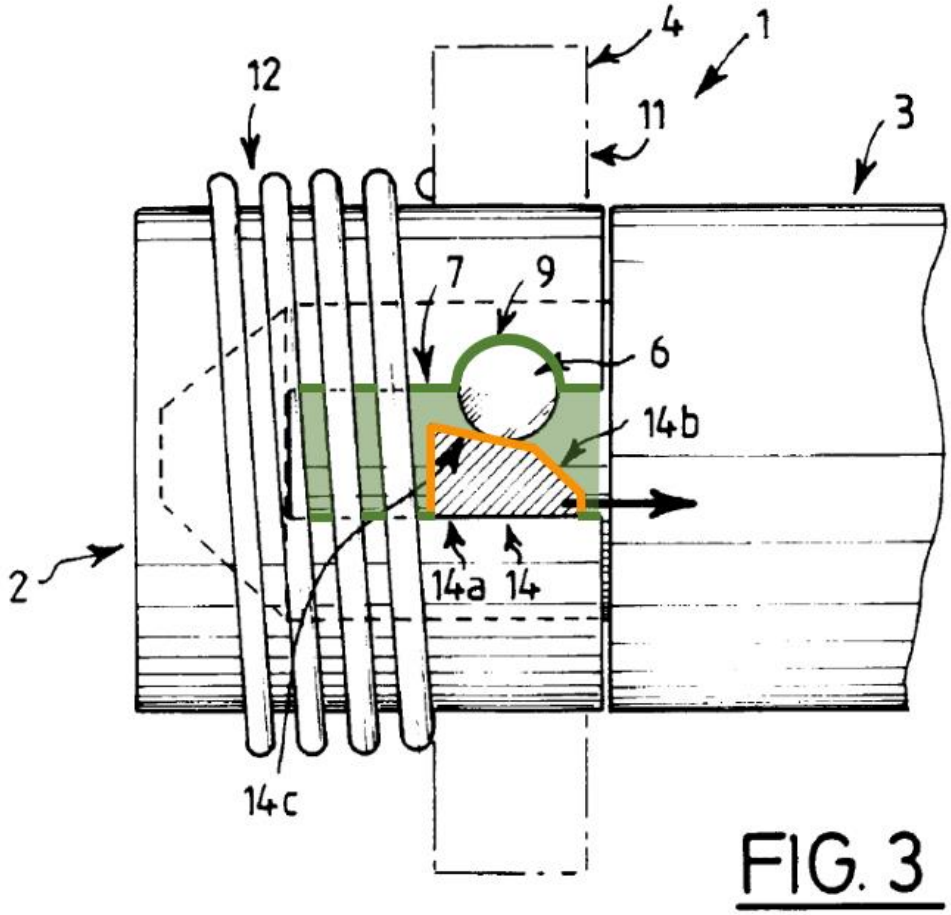

Ex. 1005, FIG. 3 (annotated).

j. Claim 5: "The appliance of claim 3, wherein the first protrusion comprises a first face for engagement with the actuator."

Mouhot discloses this claim. Ex. 1003, ¶¶193-195. Mouhot's first protrusion comprises a continuous cylindrical outer wall surface, or face (illustrated in a bold purple line), that engages the actuator (sloped surface 14b as shown in Figure 2 and sloped surface 14c as shown in Figure 3, both illustrated in a bold orange line). Ex.

1005, [0017]-[0021]. Mouhot explains, for example, that sloped surface "14b enable[s] movement of the wedge-shaped means 14 toward [its] second retracted position" when the corresponding laterally protruding part" 6 "com[es] to bear against this surface," and "guid[es] this lateral protruding part [6] in the direction of the stop means 9," while "sloped surface 14c" enables the laterally protruding part 6 "to be locked in position in these stop means" 9. *Id.*, [0020]; Ex. 1003, ¶195.

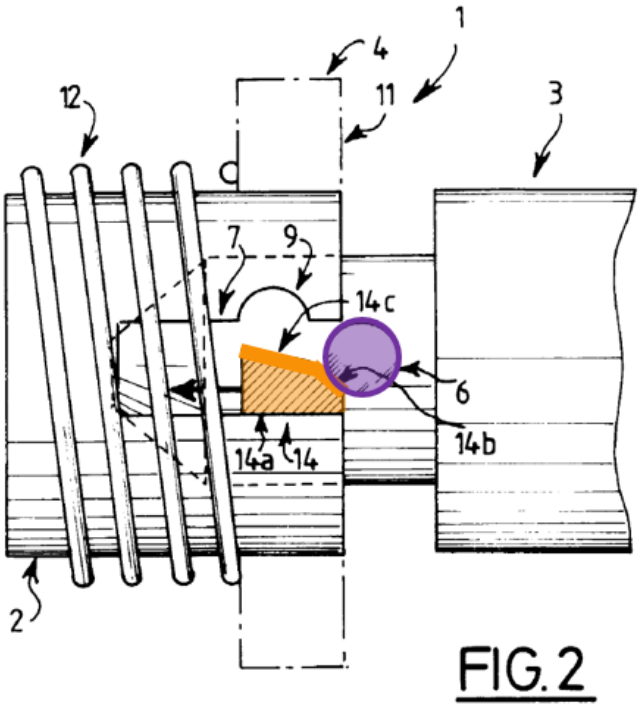

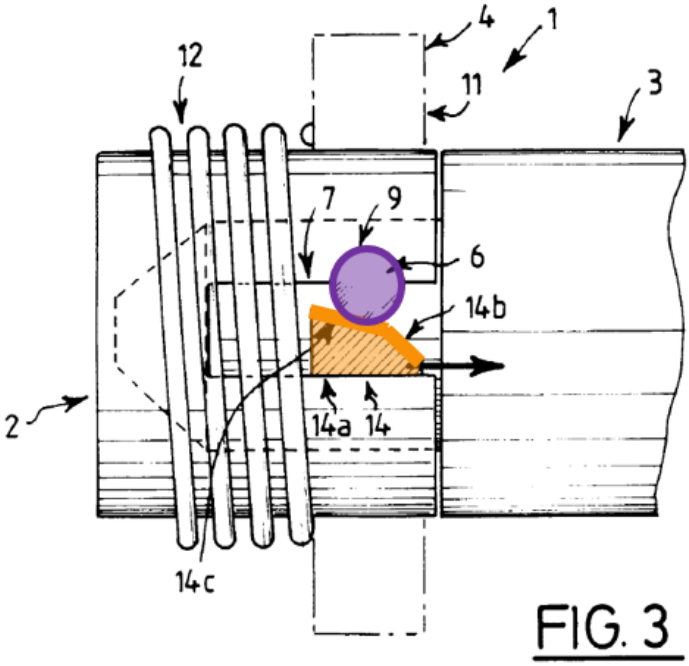

Ex. 1005, FIGS. 2, 3 (annotated).

k. Claim 6: "The appliance of claim 5, wherein the first face engages with the surface of the actuator."

Mouhot discloses this claim. Ex. 1003, ¶¶196-198. Mouhot discloses that the first face (illustrated below in a bold purple line) of the first protrusion (lateral protruding part 6) engages the surface (the continuous surface comprising sloped surfaces 14b and 14c, illustrated below in a bold orange line) of the actuator (locking means 4). Ex. 1005, [0017]-[0021].

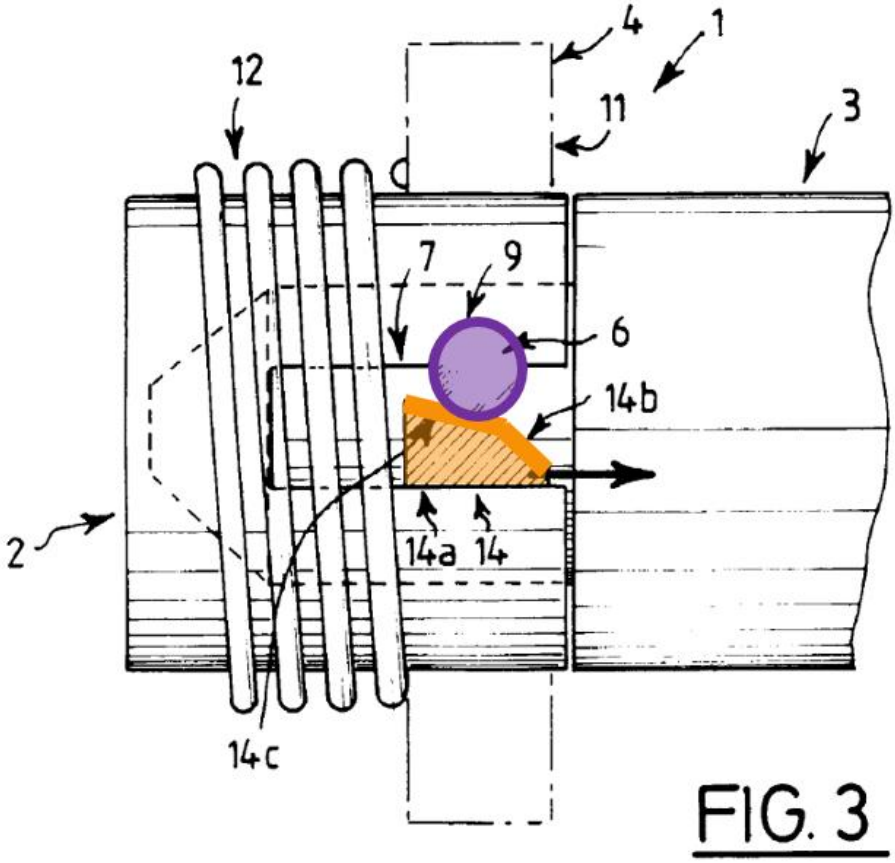

Id., FIG. 3 (annotated).

l. Claim 7: "The appliance of claim 1, wherein when the first protrusion is at a predetermined position within

the first slot, the actuator returns towards the first position."

Mouhot discloses this claim. Ex. 1003, ¶¶199-202. Mouhot discloses that when its first protrusion (lateral protruding part 6) is fully within stop means 9, the coil spring 12 pushes back "the ring and the wedge-shaped means" 14 so that "sloped surface 14c" engages "the corresponding lateral protruding part" 6 and stop means 9 "to ensure that the shank is locked in position inside the socket" by preventing lateral protruding part 6 "from disengaging" the stop means. Ex. 1005, [0024]. Thus, when the first protrusion (lateral protruding part 6) is at a predetermined position (i.e., sufficiently engaged with stop means 9), the actuator (locking means 4) returns toward the first position. Ex. 1003, ¶201.

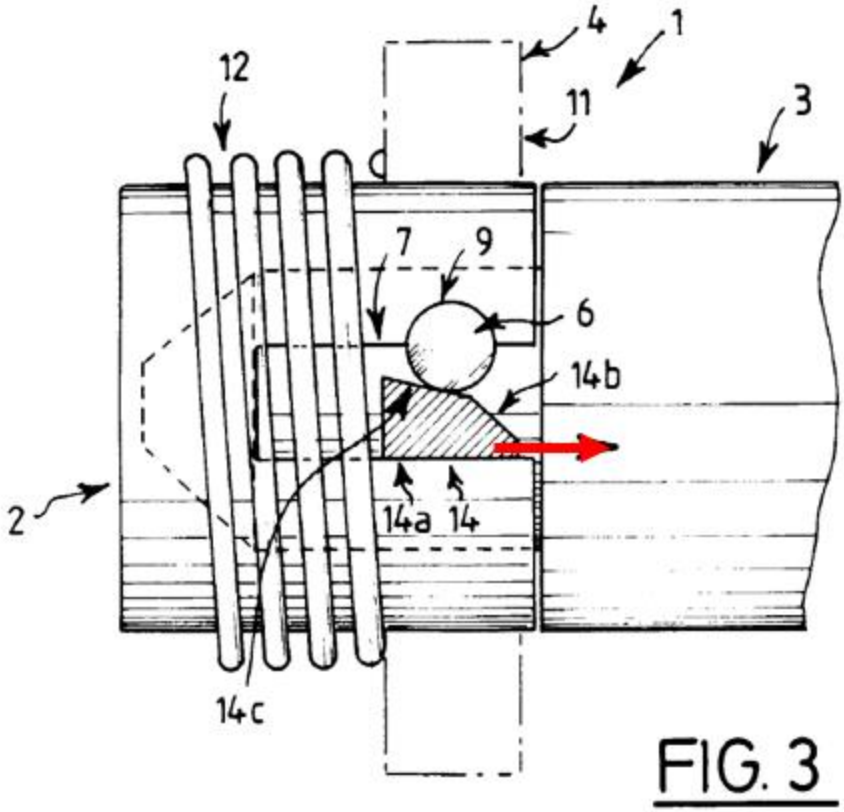

Ex. 1005, FIG. 3 (annotated).

Alternatively, when Mouhot's first protrusion is "not sufficient[ly]" engaged with the stop means and/or the sloped surfaces, the actuator ("ring [11] and wedge-shaped means [14], under the action of" coil spring 12) causes the attachment, "this shank[,] to be ejected" from the body, "the socket, so as to prevent any incorrect locking position." Ex. 1005, [0024]-[0025]. Thus, when the first protrusion (lateral protruding part 6) is at a predetermined position (i.e., any position in which it is not sufficiently engaged with stop means 9), the actuator (locking means 4) also returns toward the first position. Ex. 1003, ¶202.

m. Claim 8: "The appliance of claim 7, wherein the actuator retains the attachment on the body."

Mouhot discloses this claim. Ex. 1003, ¶¶203-205. Mouhot discloses that its actuator (locking means 4) "prevent[s] the lateral protruding part of the shank from disengaging from the stop means of the slot of the socket" Ex. 1005, [0007], and "connect[s] two members" by retaining the attachment (component comprising shank 3) on the body (component comprising socket 2), Ex. 1005, [0002], [0010]; Ex. 1003, ¶205.

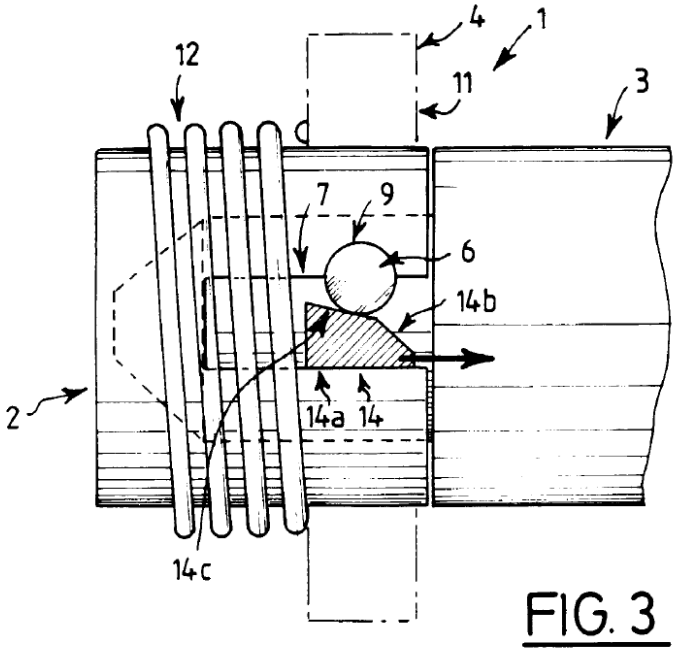

Ex. 1005, FIG. 3.

n. Claim 9: "The appliance of claim 1, wherein the actuator is biased into the first position."

Mouhot discloses this claim. Ex. 1003, ¶¶206-208. Mouhot discloses that its actuator (locking means 4) is biased into the first position, as shown in Figure 2, by the force of coil spring 12. Ex. 1005, [0018]-[0022]; Ex. 1003, ¶208.

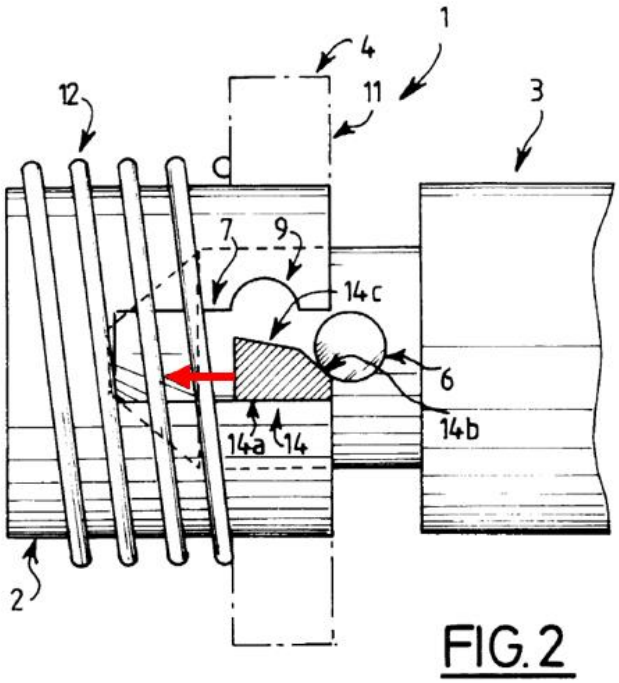

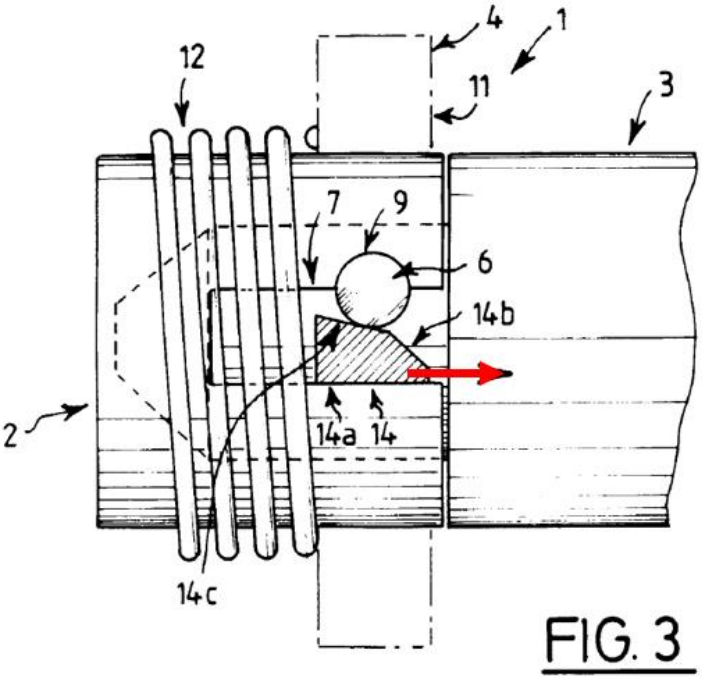

Ex. 1005, FIGS. 2, 3 (annotated).

o. Claim 15: "The appliance of claim 1, wherein the body has a first end and a second end and the attachment mechanism is adjacent the second end."

Mouhot discloses this claim. Ex. 1003, ¶¶209-211. Mouhot's component comprising socket 2 and locking means 4 constitutes a body. A first end of the component comprising socket 2 and locking means 4 is not shown and extends toward the left side of socket 2 in Figures 2 and 3 indicated by blue arrows. A second end of the component comprising socket 2 and locking means 4 is shown in Mouhot's Figures 2 and 3 (e.g., the right side of socket 2 at the opening of the first slot indicated by red arrows). Ex. 1003, ¶211. As illustrated in Figures 2 and 3, locking means 4 is adjacent to the second end. Ex. 1005, [0010]-[0013].

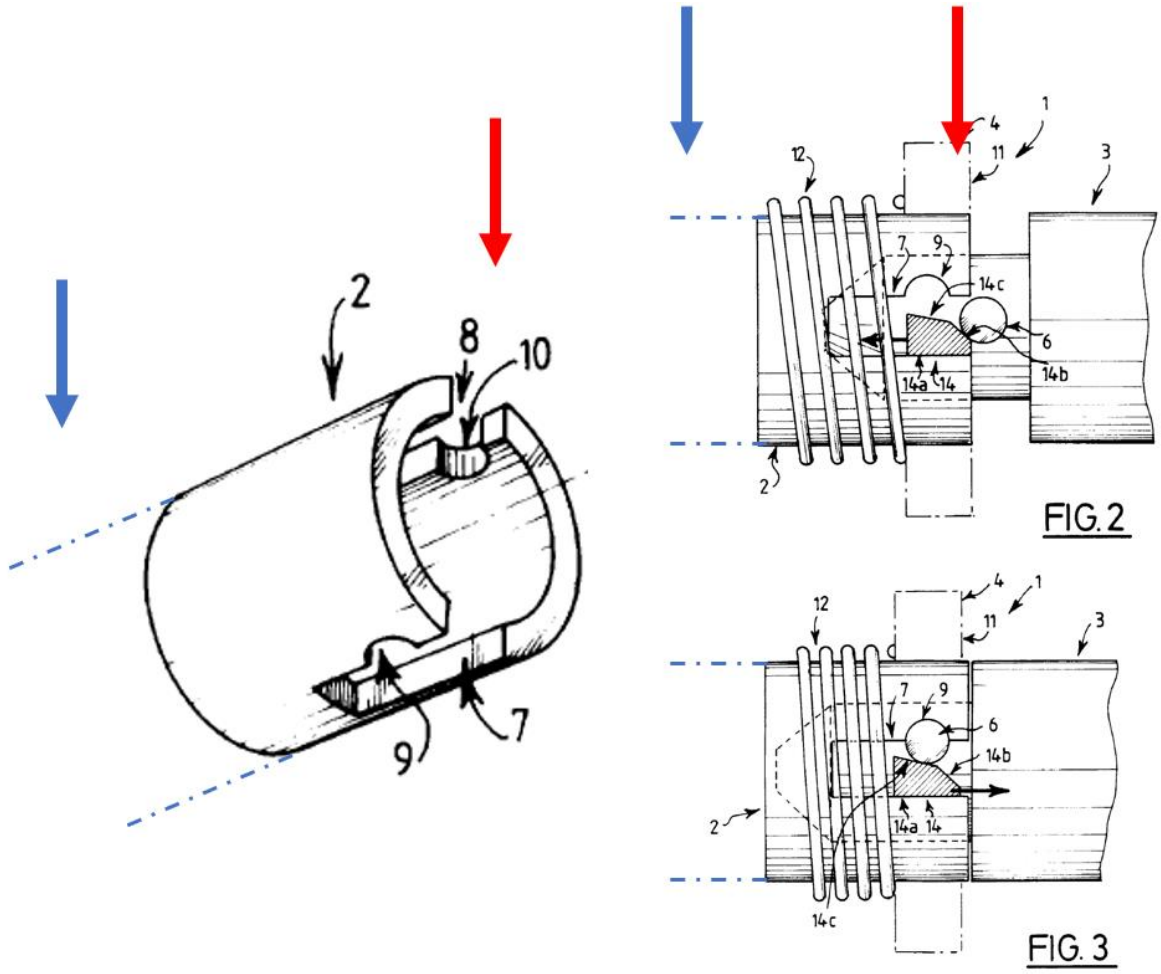

Id., FIGS. 1, (left, excerpt, annotated) 2 and 3 (right, annotated).

p. Claim 23: "The appliance of claim 1, comprising a second protrusion and a second slot."

Mouhot discloses this claim. Ex. 1003, ¶¶212-214. Mouhot discloses two slots, 7 and 8, and two stop means, 9 and 10. Although not illustrated in its figures, Mouhot explicitly discloses a second slot (illustrated below in green)—the combination of slot 8 and stop means 10—that is "diametrically opposite" the first slot and corresponds to a second protrusion (illustrated below in purple)—lateral

protruding part 5—which is "diametrically opposite" the first protrusion. Ex. 1005, [0011]-[0015]; Ex. 1003, ¶214.

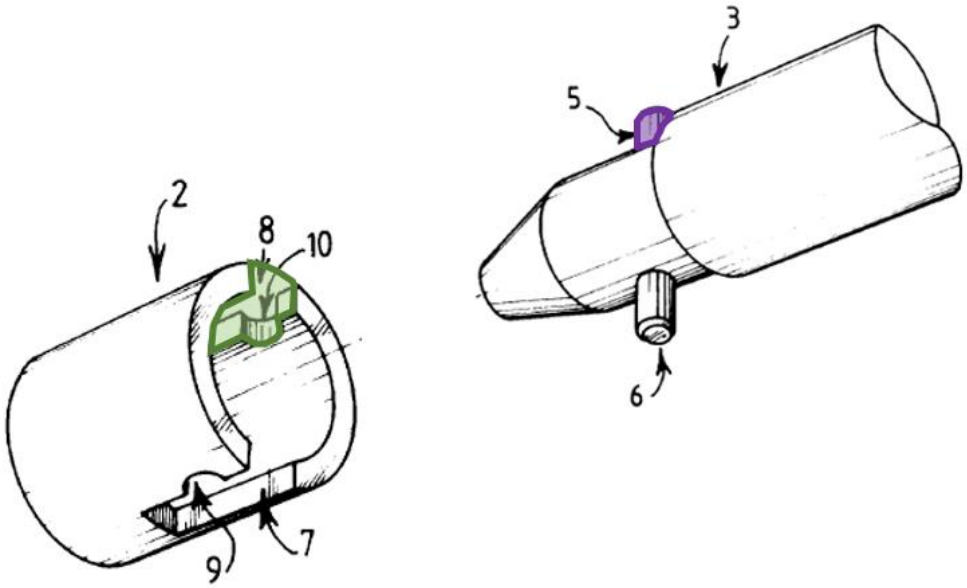

Ex. 1005, FIG. 1 (excerpt, annotated).

q. Claim 24: "The appliance of claim 23, wherein the second protrusion and second slot are radially spaced from the first protrusion and the first slot."

Mouhot discloses this claim. Ex. 1003, ¶¶215-217. Mouhot's first slot (the combination of slot 7 and stop means 9) and second slot (the combination of slot 8 and stop means 10) are "diametrically opposite" each other, as are Mouhot's first protrusion (lateral protruding part 6) and second protrusion (lateral protruding part 5). Ex. 1005, [0011]-[0015]; Ex. 1003, ¶217. Thus, the second slot and second protrusion are radially spaced from the first slot and first protrusion. Ex. 1003, ¶217.

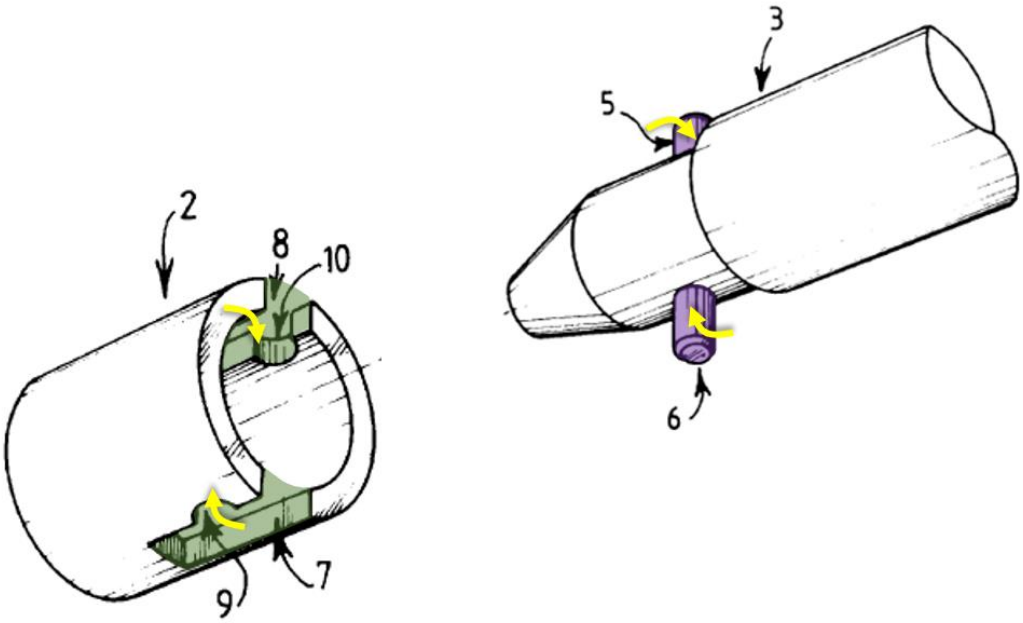

Ex. 1005, FIG. 1 (excerpt, annotated).

r. Claim 32: "The appliance of claim 1, wherein the first slot causes the attachment to pivot relative to the body as the first protrusion engages with the first slot."

Mouhot discloses this claim. Ex. 1003, ¶¶218-219. Specifically, because Mouhot's first slot includes a portion (stop means 9) extending laterally, this portion causes the attachment (component comprising shank 3) to pivot (i.e., rotate about its longitudinal axis) relative to the body as the lateral protruding part 6 is locked into place by engaging slot 7 and then stop means 9 of the first slot. Ex. 1005, [0015] ("the stop means…consist of a lateral recess 9 and 10 of each corresponding edge of the socket."); Ex. ¶219.

E. Ground 5: Mouhot in View of Maclaine Renders Obvious Claims 1-9, 15, 18, 23-24, and 30-32

1. Overview of Ground

Maclaine discloses a handheld hair care appliance having a body and various attachments that mate with corresponding protrusions on a collar of a head via a "twist lock joint." Ex. 1007, [0092]. The combination of Mouhot and Maclaine renders obvious claims 18, 30, and 31. Ex. 1003, ¶¶220-235. To the extent that the preamble of claim 1 is determined to be limiting, the combination of Mouhot and Maclaine additionally renders obvious each of claims 1-9, 15, 23-24, and 32. Petitioners incorporate by reference the analysis of Ground 4 above. *See supra*.

a. Motivation to Combine Mouhot and Maclaine

A POSITA would have been motivated to combine Mouhot and Maclaine to achieve the claimed invention. Ex. 1003, ¶¶221-224. Specifically, a POSITA would have found it obvious that Mouhot's appliance could be a handheld appliance, and that Mouhot's improved bayonet attachment mechanism could be used in a handheld hair care appliance as taught in Maclaine. *Id.* A POSITA would have been motivated to implement Mouhot's "extremely simple, reliable and easy to manufacture," Ex. 1005, [0028], coupling mechanism that provides "quick" coupling and decoupling in a handheld hair care appliance as taught in Maclaine. *Id.*, [0001]-[0009]. Maclaine discloses a variety of "heads" or attachments that are interchangeable and can be attached to a hair care appliance body. Each of the

multiple attachments performs different functions, and a user of the hair care appliance would have been likely to use multiple attachments—for example, first to detangle and dry, and then to curl and style—and would have wanted to switch attachments out quickly and efficiently. Ex. 1003, ¶221. Thus, a POSITA reviewing the hair care appliance system of Maclaine would have found implementing an easy and efficient attachment mechanism in a handheld hair care appliance desirable and would have been motivated to do so. *Id.*

A POSITA would have understood that there were a variety of known twist lock mechanisms, including the mechanism discussed in Mouhot. *Id.*, ¶222. In addition, a POSITA would have understood that implementing Mouhot's bayonet coupling mechanism in a handheld hair care appliance as taught in Maclaine would have achieved Mouhot's stated goal of providing a simple, reliable, and easy to manufacture mechanism while improving the usability of such a hair care appliance when rotated through hair. Ex. 1005, [0028]; Ex. 1003, ¶222.

Mouhot contemplates that its disclosed coupling mechanism can be implemented in "numerous applications," Ex. 1005, [0029], and Maclaine teaches that for its fixing mechanism between the attachment and the body, "it will be apparent to the skilled person that other equally acceptable alternative mechanisms could be used." Ex. 1007, [0092]. Thus, the combination of Mouhot and Maclaine with respect to the attachment mechanism is nothing more than the use of a known

technique (a coupling mechanism according to Mouhot) to improve devices (Maclaine's handheld hair device) in the same way to yield predictable results (fast, extremely simple, reliable and easy to manufacture coupler mechanism). Ex. 1003, ¶223.

Furthermore, it would have been obvious to a POSITA to use the attachment assembly disclosed in Mouhot in a haircare appliance as disclosed by Maclaine since such a modification is a simple substitution. *Id.*, ¶224. Maclaine and other prior disclosures of handheld hair care appliances already contemplates the use of a bayonet coupling. And, bayonet couplings have been known and employed in many fields for decades as a simple, reliable solution for ensuring the transmission of torque. A POSITA would have had a reasonable expectation of success in implementing a simple substitution of one type of bayonet coupling for another, more robust type of bayonet coupling, to achieve a more secure connection. *Id.* Therefore, a POSITA would have been motivated to utilize the attachment mechanism of Mouhot in a handheld hair care appliance to provide a more secure, simple connection. *Id.*

2. Detailed Analysis of Ground 5

a. Element 1[pre]: "A handheld appliance"

To the extent the preamble is found limiting, Mouhot in view of Maclaine renders this claim element obvious. *See* Sections IV.A.2.a and IV.D.2.a (incorporated herein by reference); Ex. 1003, ¶¶162-166, 225-226.

b. Claim 15: "The appliance of claim 1, wherein the body has a first end and a second end and the attachment mechanism is adjacent the second end."

Mouhot discloses the elements of claims 1 and 15 as discussed above. Ex. 1003, ¶¶162-184, 209-211, 227-228. To the extent that Mouhot is not found to disclose this element, Mouhot in view of Maclaine teaches this limitation of claim 15. *See* Section IV.B.2.b (incorporated herein by reference); Ex. 1007, [0046]-[0047]; Ex. 1003, ¶¶112-114, 130-131.

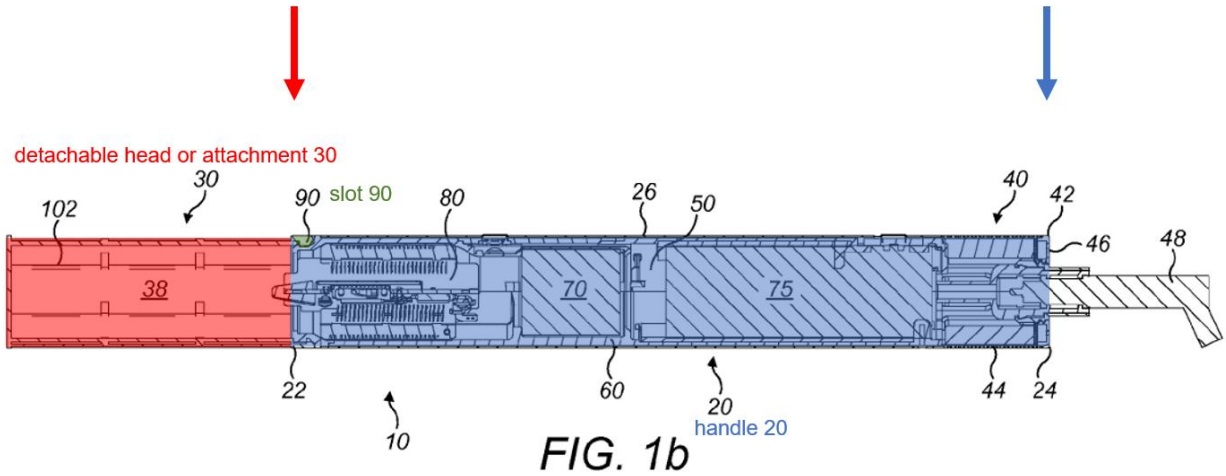

Id., FIG. 1b (annotated).

c. Claim 18: "The appliance of claim 1, wherein the attachment comprises a collar extending around the

attachment and the first protrusion extends from the collar."

Mouhot discloses the elements of claim 1 as discussed above. Ex. 1003, ¶¶162-184. Maclaine teaches this additional limitation of claim 18. *See* Section IV.B.2.c (incorporated herein by reference); Ex. 1007, [0092]; Ex. 1003, ¶¶132-135.

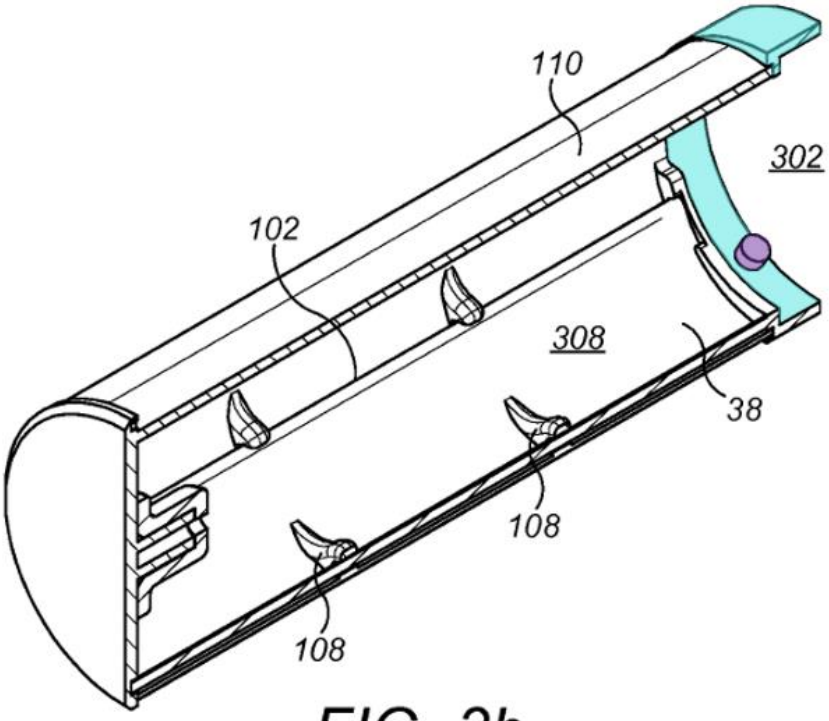

FIG. 3b

Id., FIG. 3b (annotated).

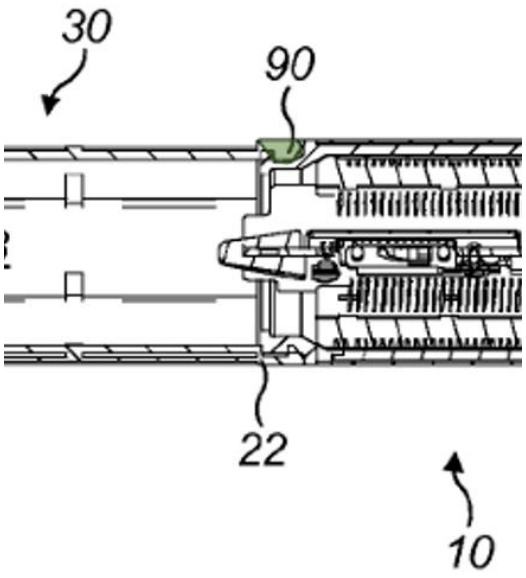

Id., FIG. 1b (excerpt, annotated).

For the reasons explained in Section IV.E.1.a (incorporated herein by reference), a POSITA would have been motivated to combine Mouhot and Maclaine and would have had a reasonable expectation of success in making the combination. Ex. 1003, ¶¶221-224. Thus, the combination of Mouhot and Maclaine renders claim 18 obvious. Ex. 1003, ¶¶229-232.

d. Claim 30: "The appliance of claim 1, wherein the appliance is a hair care appliance."

Mouhot discloses the elements of claim 1 as discussed above. Ex. 1003, ¶¶162-184. Maclaine teaches this additional limitation of claim 30. Ex. 1003, ¶233; *see* Section IV.B.2.d (incorporated herein by reference); Ex. 1007, [0002]-[0007], [0019]-[0020]. For the reasons explained in Section IV.E.1.a (incorporated herein by reference), a POSITA would have been motivated to combine Mouhot and

Maclaine and would have had a reasonable expectation of success in making the combination. Ex. 1003, ¶¶221-224. Thus, the combination of Mouhot and Maclaine renders claim 30 obvious. Ex. 1003, ¶233.

e. Claim 31: "The appliance of claim 30, wherein the hair care appliance is a hot styling appliance."

Mouhot in view of Maclaine renders obvious claim 30 as discussed above. Ex. 1003, ¶233. Maclaine teaches this additional limitation of claim 31. Ex. 1003, ¶234; *see* Section IV.B.2.b (incorporated herein by reference); Ex. 1007, [0002]-[0007], [0019]-[0020]. For the reasons explained in Section IV.E.1.a (incorporated herein by reference), a POSITA would have been motivated to combine Mouhot and Maclaine and would have had a reasonable expectation of success in making the combination. Ex. 1003, ¶234. Thus, the combination of Mouhot and Maclaine renders claim 31 obvious. *Id.*

F. Ground 6: Mouhot in View of Maclaine and Jeannet Renders Obvious Claims 1-9, 15, 18, 23-24 and 30-34

1. Overview of Ground

Jeannet discloses an attachment mechanism for attaching an attachment (toothbrush head) to a body (toothbrush body). The combination of Mouhot in view of Maclaine and Jeannet additionally renders obvious claims 33 and 34 of the '660 patent. Ex. 1003, ¶¶236-257. Petitioners incorporate by reference the analysis of Grounds 4 and 5 above. *See supra.*

a. Motivation to Combine Mouhot, Maclaine, and Jeannet

See Section IV.E.1.a (incorporated herein by reference). A POSITA would have been motivated to combine Mouhot and Maclaine, and would have had a reasonable expectation of success in doing so. Ex. 1003, ¶¶221-224. Additionally, a POSITA would have been motivated to incorporate an unlocking button, as taught by Jeannet's unlocking button 121, into the combined Mouhot and Maclaine system.

A POSITA would have understood that an unlocking interface in the form of an unlocking button, when combined with Mouhot and Maclaine's handheld hair care appliance, would achieve the benefits of providing a "relatively eas[y]" way to release the bayonet coupling between the body and attachment of the combined system. Ex. 1008, 1:29-36; Ex. 1003, ¶238.

Furthermore, it would have been obvious to a POSITA to modify the combined system of Mouhot and Maclaine to use an unlocking button as disclosed in Jeannet, since such a modification is a simple addition. Ex. 1003, ¶239. The combined system of Mouhot and Maclaine already uses a bayonet coupling, and the implementation of Jeannet's unlocking button would require only adding a button to the outside of ring 4 and its internal wedge-shaped means 13, 14 of Mouhot based on Jeannet's disclosure of button 121, connecting pin 124, and locking peg 126. *Id.* Both mechanisms function in the same manner (*i.e.*, they slide longitudinally) to achieve the same results, namely moving a protrusion to releasing an attachment

mechanism. *Id.* A POSITA would have had a reasonable expectation of success in implementing a simple substitution of one component of a bayonet coupling for another that performs the same function to achieve a simpler unlocking mechanism. Therefore, a POSITA would have been motivated to implement the unlocking mechanism of Jeannet in the combined Mouhot and Maclaine handheld hair care appliance. *Id.*

2. Detailed Analysis of Ground 6

a. Element 33[pre]: "A handheld appliance"

See Section IV.D.2.a (incorporated herein by reference). The preamble term "handheld" is not limiting, and without the "handheld" preamble phrase, Element 33[pre] recites "[a]n appliance." Mouhot discloses this limitation. Ex. 1003, ¶¶163-166. To the extent the preamble is found limiting, Mouhot in view of Maclaine and Jeannet renders this claim element obvious. Ex. 1003, ¶¶226, 240-245.

b. Element 33[a]: "having a body and an attachment"

See Sections IV.D.2.b, IV.F.1.a (incorporated herein by reference). The Mouhot, Maclaine, and Jeannet combination renders this limitation obvious. Ex. 1003, ¶¶167-169, 237-239, 246.

c. Element 33[b]: "the body comprising an attachment mechanism having a first slot and an actuator"

See Sections IV.D.2.c, IV.F.1.a (incorporated herein by reference). The Mouhot, Maclaine, and Jeannet combination renders this limitation obvious. Ex. 1003, ¶¶170-176, 237-239, 247.

d. Element 33[c]: "the attachment comprising a first protrusion configured to engage with the first slot"

See Sections IV.D.2.d, IV.F.1.a (incorporated herein by reference). The Mouhot, Maclaine, and Jeannet combination renders this limitation obvious. Ex. 1003, ¶¶177-179, 237-239, 248.

e. Element 33[d]: "wherein the actuator has a first position and a second position and the actuator is slidably moved from the first position towards the second position in a longitudinal direction of the body as the first protrusion engages with the first slot"

See Section IV.D.2.e, IV.F.1.a (incorporated herein by reference). The Mouhot, Maclaine, and Jeannet combination renders this limitation obvious. Ex. 1003, ¶¶180-182, 237-239, 249.

f. Element 33[e]: "further comprising a user operated button which engages with the actuator."

Mouhot in view of Maclaine and Jeannet renders this limitation obvious. Ex. 1003, ¶¶250-255. For example, Jeannet discloses a "bayonet catch" for attaching an attachment (toothbrush head) to a body (toothbrush body). Ex. 1008, Abstract. *See*

Section IV.C.2.e (incorporated herein by reference); Ex. 1008, 1:29-57, 3:41-57, 4:6-33; Ex. 1003, ¶¶183-184, 237-239, 250-255.

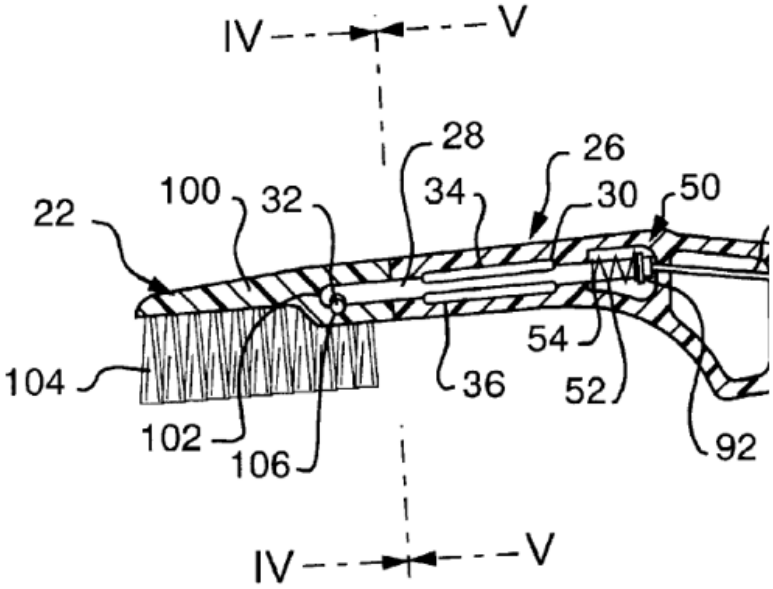

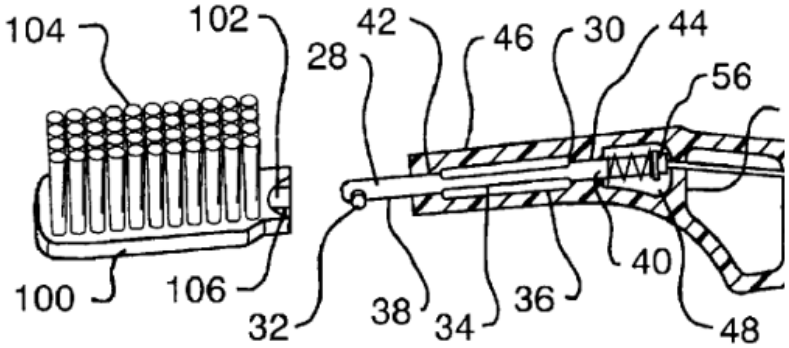

Id., FIG. 1 (top, excerpt), FIG. 2 (bottom, excerpt).

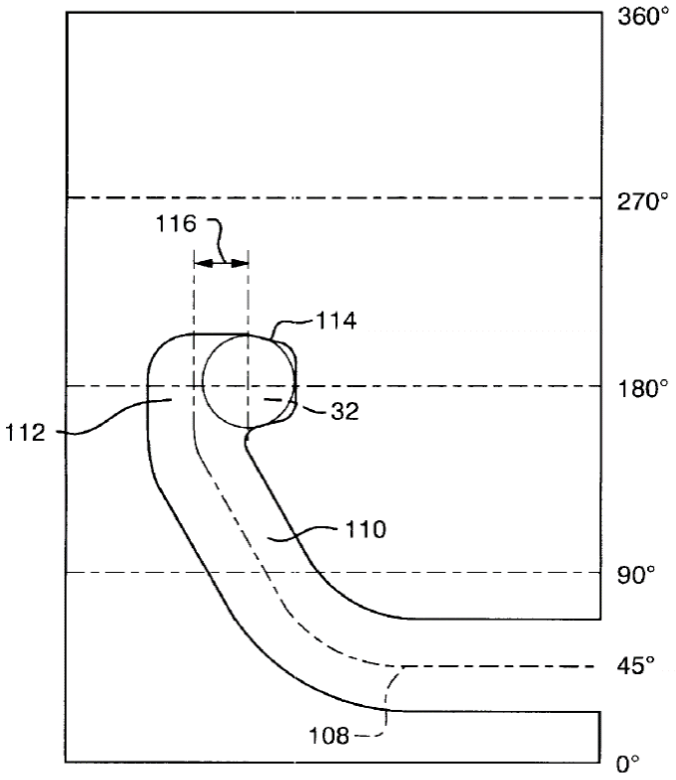

FIG. 6

Id., FIG. 6.

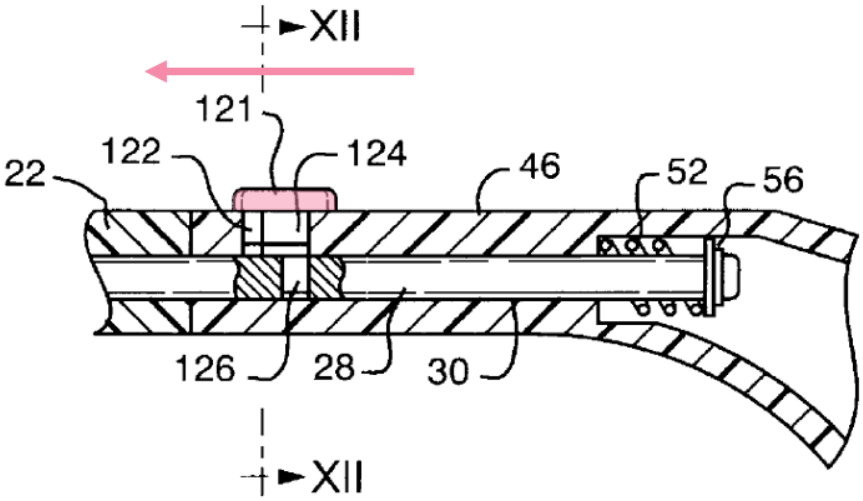

FIG. 10

Id., FIG. 10 (annotated).

It would have been obvious to add a button to the outside of ring 4 and its internal wedge-shaped means 13, 14 of Mouhot as taught by Jeannet's disclosure of button 121, connecting pin 124, and locking peg 126 because such a modification would be a simple addition. Both mechanisms function in the same manner (*i.e.*, they slide longitudinally) to achieve the same results, namely moving a protrusion to release an attachment mechanism. Ex. 1003, ¶¶255. Thus, the combination of Mouhot, Maclaine, and Jeannet renders "a user operated button which engages the actuator" obvious and renders claim 33 obvious. *Id.*

g. Claim 34: "The appliance of claim 33, wherein actuation of the button moves the actuator from the first position to the second position to facilitate removal of an attachment from the body."

Mouhot in view of Maclaine and Jeannet discloses this limitation. Ex. 1003, ¶¶256-257. *See* Section IV.C.2.g (incorporated herein by reference); Ex. 1008, 1:29-57; 4:6-33; Ex. 1003, ¶¶159-160 Thus, the combination of Mouhot, Maclaine, and Jeannet renders claim 34 obvious. Ex. 1003, ¶¶256-257.

V. ENABLEMENT AND SECONDARY CONSIDERATIONS

The prior art references relied upon in this petition are all enabled. There are also no secondary considerations of non-obviousness tied to the Challenged Claims. Ex. 1003, ¶¶258-260.

VI. PTAB DISCRETION SHOULD NOT PRECLUDE INSTITUTION

A. Discretionary Denial Under § 314(a) Is Not Warranted

SharkNinja filed this Petition before any Complaint was filed by Patent Owner against SharkNinja for infringement of the Challenged Claims. Given the lack of any pending lawsuit, the *Fintiv* factors weigh in favor of institution. If Patent Owner later brings an infringement action against SharkNinja asserting any of the Challenged Claims, SharkNinja may request leave to address any such developments.

Petitioners previously filed IPR2023-01323 on August 18, 2023, prior to the 35 U.S.C. § 311 eligibility window. This Petition replaces IPR2023-01323, which was terminated on November 28, 2023 pursuant to an unopposed motion filed by SharkNinja before Patent Owner filed a Preliminary Response. The *General Plastic* factors favor institution of this Petition. Petitioner moved quickly to dismiss the 1323 petition once Patent Owner indicated that the Challenged Patent was not then eligible for IPR. Patent Owner agreed to the withdrawal knowing that Petitioner would refile a new Petition when the ’660 patent was eligible for IPR. Because the 1323 Petition was withdrawn before any evaluation on the merits, the Board will only be asked to evaluate the merits of a single IPR for this patent, thus promoting efficiency and preserving the Board’s resources.

B. Discretionary Denial Under § 325(d) Is Not Warranted

The arguments in this Petition are new and non-cumulative of the art considered during prosecution. None of the references used were cited or considered during prosecution.

VII. CONCLUSION

This Petition establishes a reasonable likelihood that the Challenged Claims are unpatentable. Petitioners respectfully request that IPR be instituted.

DATED: November 29, 2023

Respectfully Submitted,

/Brian M. Buroker/

Brian M. Buroker (Reg. No. 39,125)
GIBSON, DUNN & CRUTCHER LLP
1050 Connecticut Ave. NW
Washington, DC 20036
Phone: (202) 955-8500
Fax: (202) 467-0539
Email: bburoker@gibsondunn.com

Attorney for Petitioners SharkNinja Inc., SharkNinja Operating LLC, SharkNinja Management LLC, and SharkNinja Sales Company

CERTIFICATION UNDER 37 C.F.R. § 42.24(d)

Under the provisions of 37 C.F.R. § 42.24(d), the undersigned attorney hereby certifies that the word count for Sections I–VII of the foregoing Petition for *Inter Partes* Review is 13,981, according to the word count tool in Microsoft Word.

DATED: November 29, 2023

By: /Brian M. Buroker/

Brian M. Buroker (Reg. No. 39,125)
GIBSON, DUNN & CRUTCHER LLP
1050 Connecticut Ave. NW
Washington, DC 20036
Phone: (202) 955-8500
Fax: (202) 467-0539
Email: bburoker@gibsondunn.com

Attorney for Petitioners SharkNinja Inc., SharkNinja Operating LLC, SharkNinja Management LLC, and SharkNinja Sales Company

CERTIFICATE OF SERVICE

The undersigned certifies service pursuant to 37 C.F.R. §§ 42.6(e) and 42.105(a), (b) on the Patent Owner via FedEx overnight mail of a copy of this Petition for *Inter Partes* Review and supporting materials at the Patent Owner at the correspondence address of record for the ’660 patent:

Faegre Drinker Biddle & Reath LLP
1500 K Street NW
Suite 1100
Washington, DC 20005

DATED: November 29, 2023

By: /Brian M. Buroker/

Brian M. Buroker (Reg. No. 39,125)
GIBSON, DUNN & CRUTCHER LLP
1050 Connecticut Ave. NW
Washington, DC 20036
Phone: (202) 955-8500
Fax: (202) 467-0539
Email: bburoker@gibsondunn.com

Attorney for Petitioners SharkNinja Inc., SharkNinja Operating LLC, SharkNinja Management LLC, and SharkNinja Sales Company

APPENDIX: CHALLENGED CLAIM LISTING

No.	Limitation
1[pre]	A handheld appliance
1[a]	having a body and an attachment,
1[b]	the body comprising an attachment mechanism having a first slot and an actuator,
1[c]	the attachment comprising a first protrusion configured to engage with the first slot,
1[d]	wherein the actuator has a first position and a second position and the actuator is slidably moved from the first position towards the second position in a longitudinal direction of the body as the first protrusion engages with the first slot;
1[e]	wherein the body extends along a longitudinal axis and the first slot extends both radially around and axially along the body.
2	The appliance of claim 1, wherein in the first position, the actuator at least partially obscures the first slot.
3	The appliance of claim 1, wherein the actuator comprises a surface which interacts with the first protrusion when the first protrusion engages with the first slot.
4	The appliance of claim 3, wherein the surface is configured to at least partially define the first slot at or near the second position.
5	The appliance of claim 3, wherein the first protrusion comprises a first face for engagement with the actuator.
6	The appliance of claim 5, wherein the first face engages with the surface of the actuator.
7	The appliance of claim 1, wherein when the first protrusion is at a predetermined position within the first slot, the actuator returns towards the first position.
8	The appliance of claim 7, wherein the actuator retains the attachment on the body.
9	The appliance of claim 1, wherein the actuator is biased into the first position.

No.	Limitation
15	The appliance of claim 1, wherein the body has a first end and a second end and the attachment mechanism is adjacent the second end.
18	The appliance of claim 1, wherein the attachment comprises a collar extending around the attachment and the first protrusion extends from the collar.
23	The appliance of claim 1, comprising a second protrusion and a second slot.
24	The appliance of claim 23, wherein the second protrusion and second slot are radially spaced from the first protrusion and the first slot.
30	The appliance of claim 1, wherein the appliance is a hair care appliance.
31	The appliance of claim 30, wherein the hair care appliance is a hot styling appliance.
32	The appliance of claim 1, wherein the first slot causes the attachment to pivot relative to the body as the first protrusion engages with the first slot.
33[pre]	A handheld appliance
33[a]	having a body and an attachment,
33[b]	the body comprising an attachment mechanism having a first slot and an actuator,
33[c]	the attachment comprising a first protrusion configured to engage with the first slot,
33[d]	wherein the actuator has a first position and a second position and the actuator is slidably moved from the first position towards the second position in a longitudinal direction of the body as the first protrusion engages with the first slot,
33[e]	further comprising a user operated button which engages with the actuator.
34	The appliance of claim 33, wherein actuation of the button moves the actuator from the first position to the second position to facilitate removal of an attachment from the body.