US 20090188358A1

(19) United States

(12) Patent Application Publication

Hansen et al.

(10) Pub. No.: US 2009/0188358 A1

(43) Pub. Date: Jul. 30, 2009

(54) **OUTPUT CONVEYOR FOR A FOOD ARTICLE SLICING MACHINE**

(76) Inventors: **David Hansen**, Orland Park, IL (US); **James E. Pasek**, Tinley Park, IL (US)

Correspondence Address:
THE LAW OFFICE OF RANDALL T. ERICKSON, P.C.
1749 S. NAPERVILLE ROAD, SUITE 202
WHEATON, IL 60187 (US)

(21) Appl. No.: **12/255,659**

(22) Filed: **Oct. 21, 2008**

Related U.S. Application Data

(60) Provisional application No. 60/999,961, filed on Oct. 22, 2007, provisional application No. 61/000,202, filed on Oct. 23, 2007.

Publication Classification

(51) **Int. Cl.**
B26D 7/30 (2006.01)
B26D 7/32 (2006.01)

(52) **U.S. Cl.** **83/77**; 83/412

(57) **ABSTRACT**

An output conveyor for a high speed slicing apparatus having four deceleration conveyors that receive slices from a jump conveyor. Each deceleration conveyor laterally position slices in an output lane. The deceleration conveyors have a pivotal axis for matching an elevation of an end of said deceleration conveyor with an elevation of an upstream conveyor. The output conveyor also comprises four weighing conveyors for weighing slices received from upstream components. The weighing conveyors each comprise a removable carrying unit for turning a conveyor belt and a drive unit for driving the carrying unit.

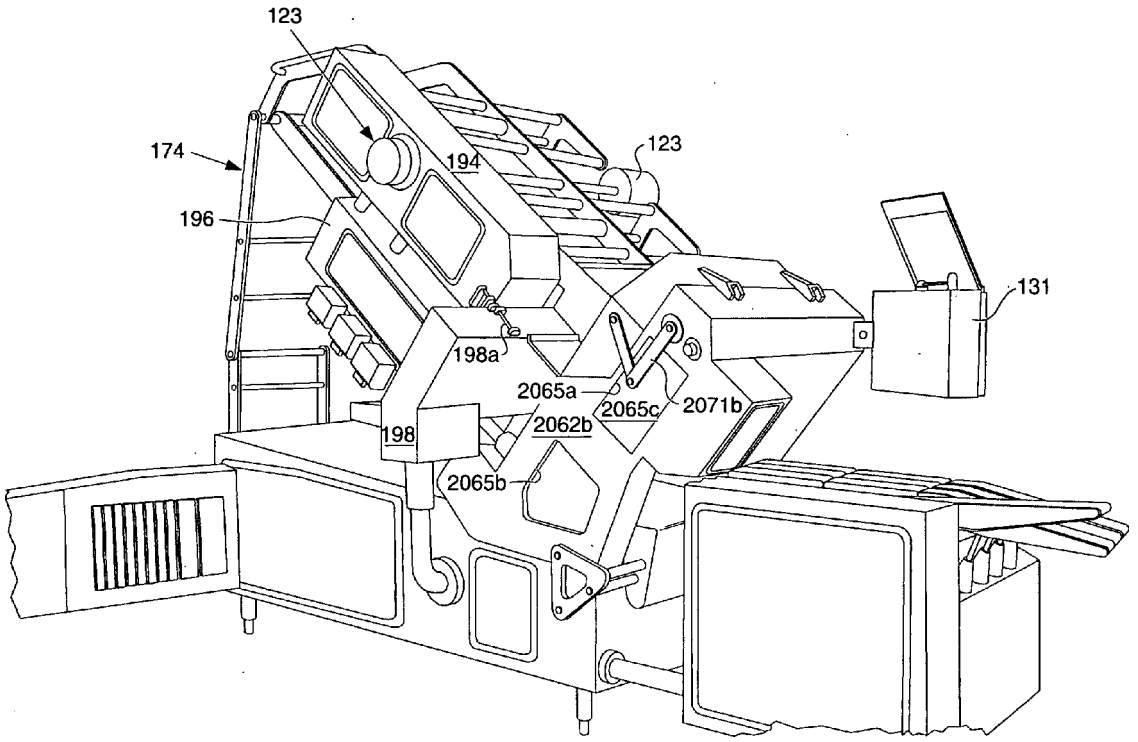

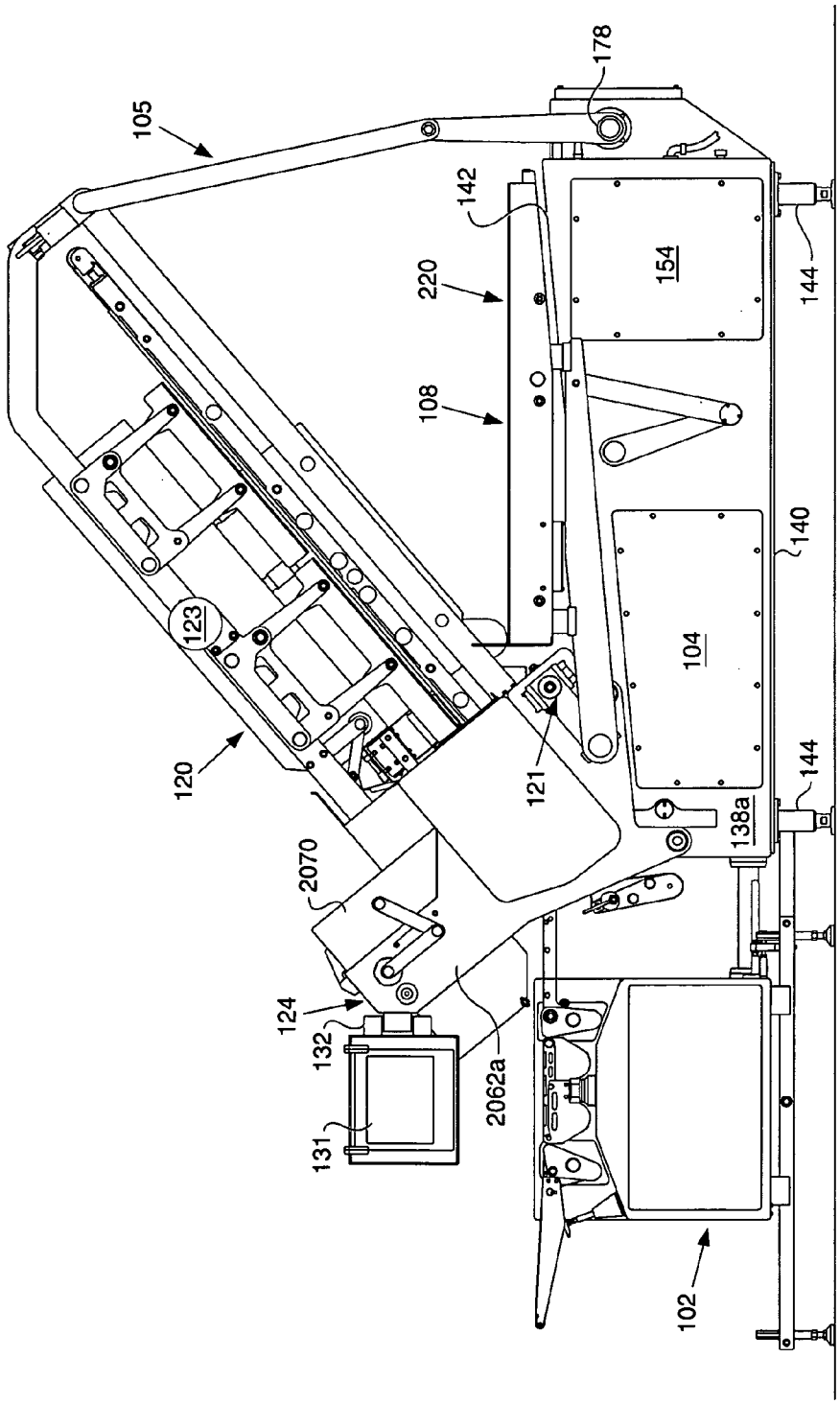
105
178
142
220
154
144
108
140
123
104
120
121
144
138a
2070
124
132
2062a
131
102

FIG. 1

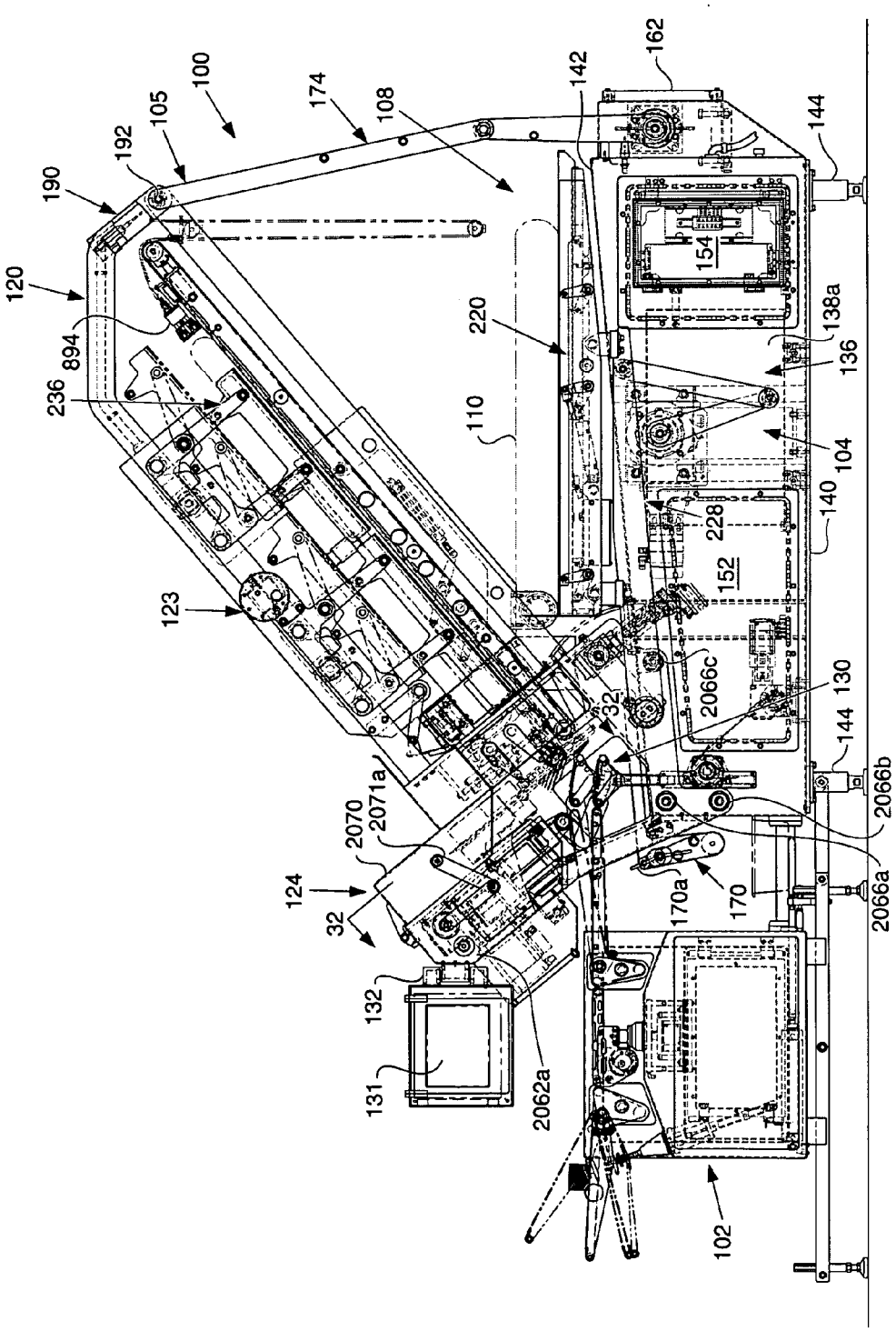
100
105
192
190
120
894
236
174
108
142
162
144
154
138a
136
220
110
104
140
228
152
123
2066c
130
32
144
2066b
2071a
2070
124
32
170a
170
2066a
132
131
2062a
102

FIG. 2

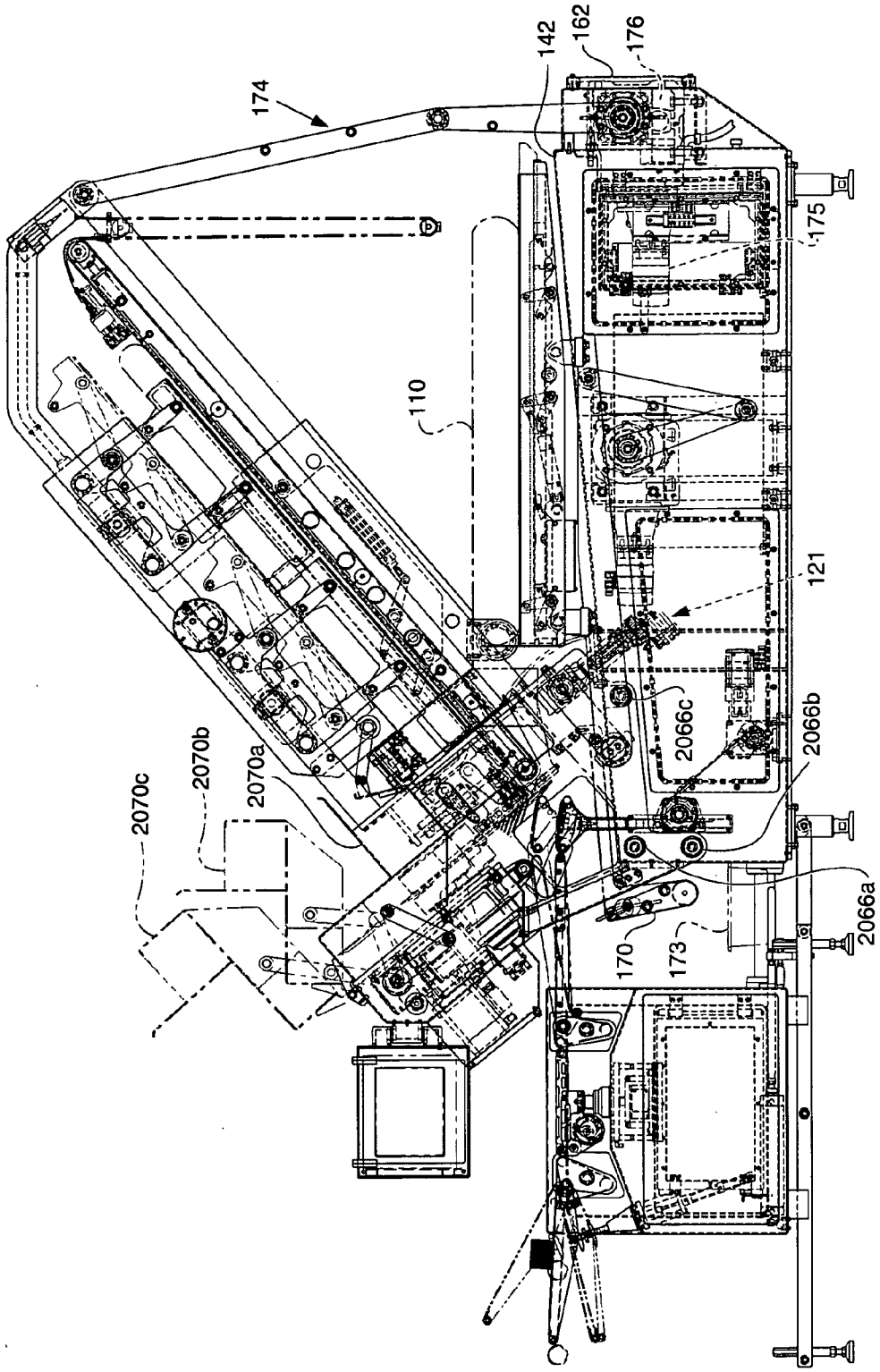
174
142
162
176
175
110
121
2066c
2066b
2066a
2070a
2070b
2070c
170
173

FIG. 3

FIG. 4

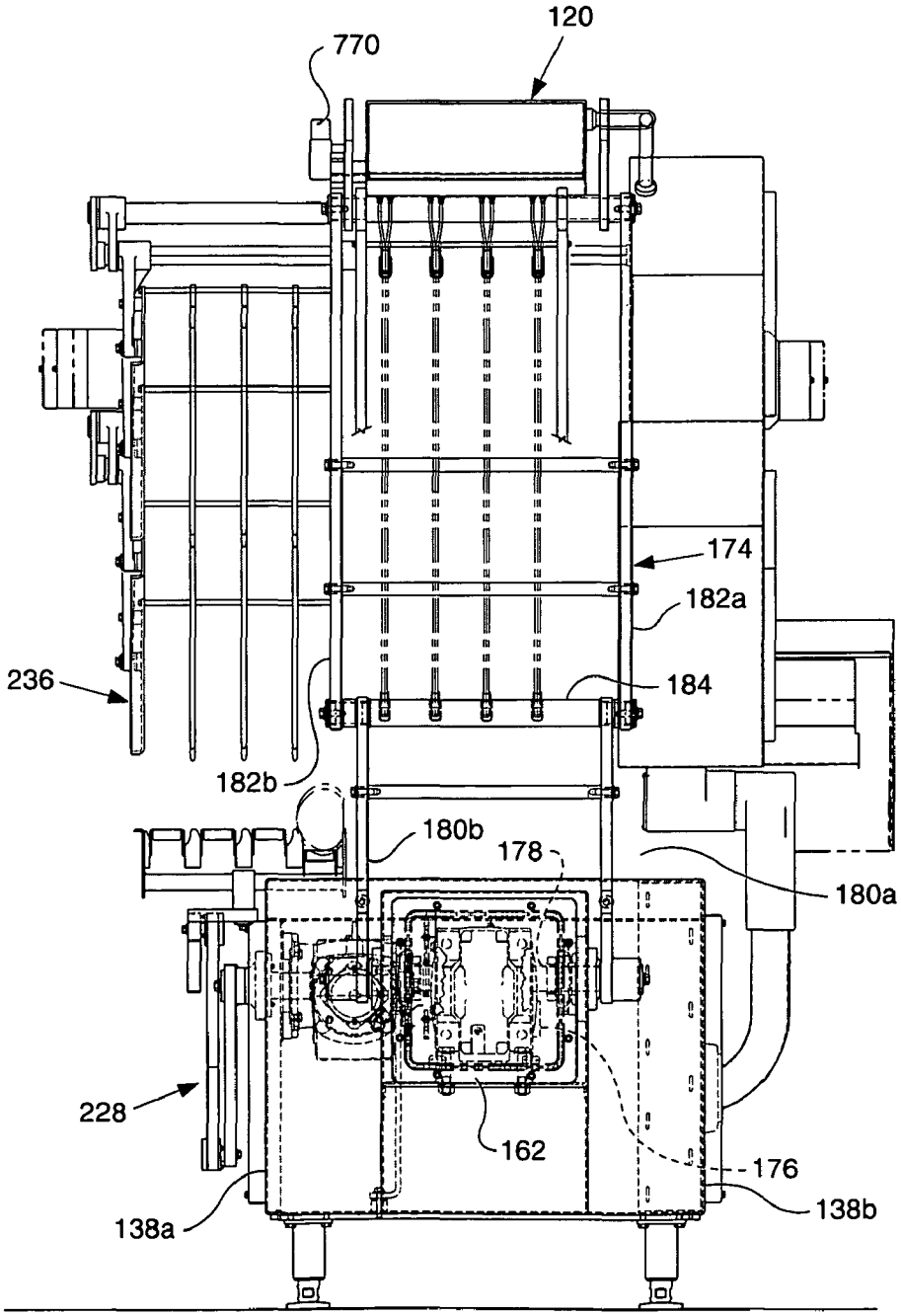
120
770
174
182a
236
184
182b
180b
178
180a
228
162
176
138a
138b

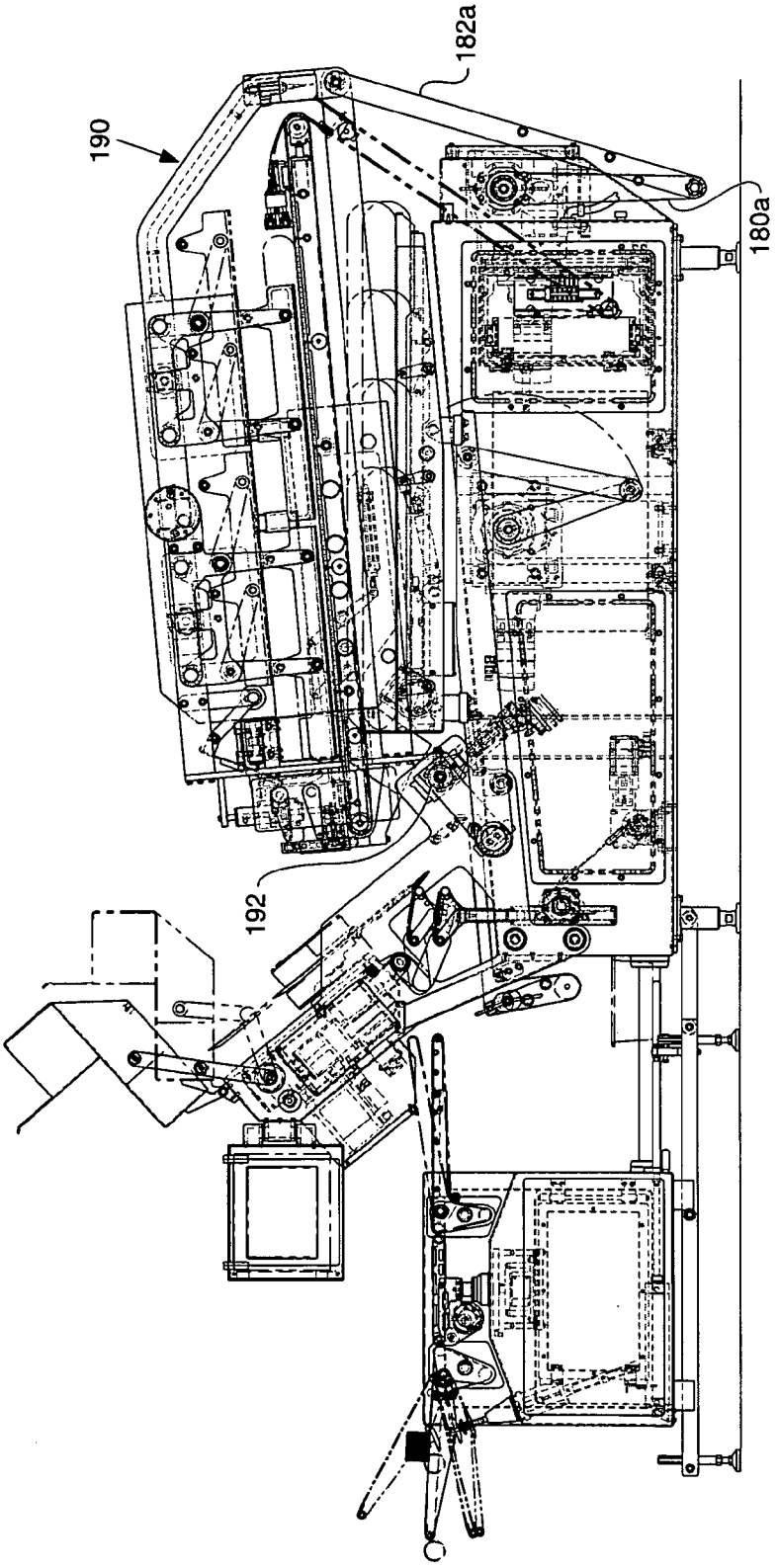

FIG. 4A

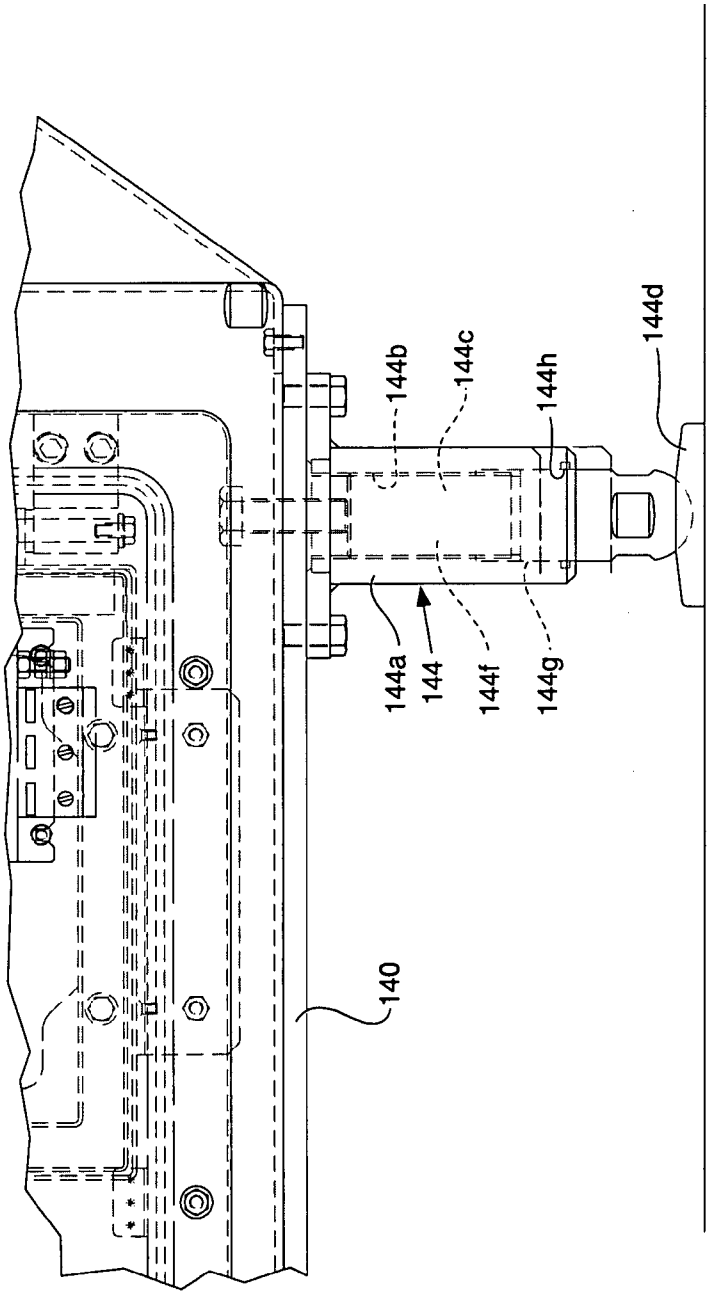

FIG. 4B

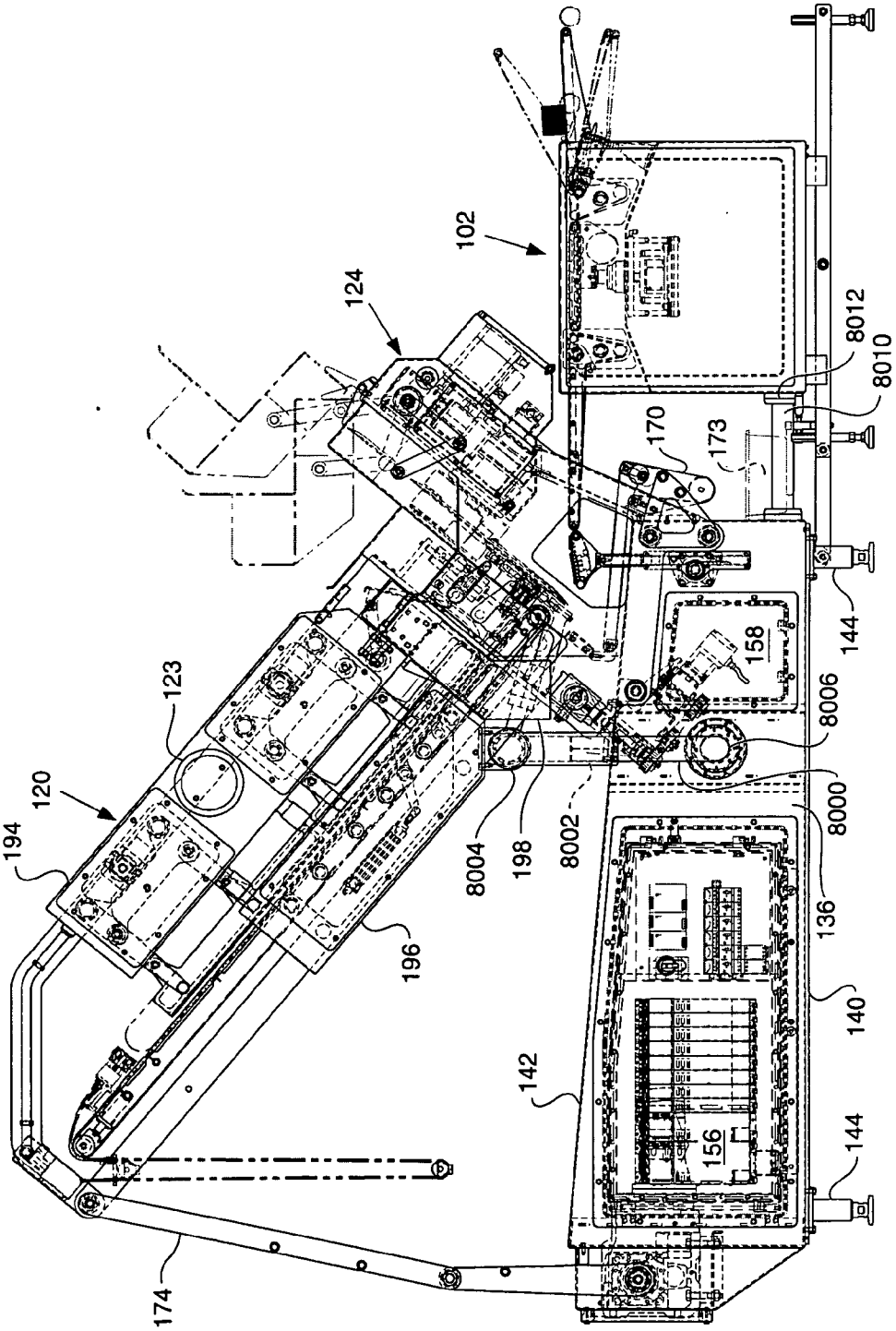
102
124
8012
8010
170
173
144
158
8006
123
120
194
8000
8004
198
8002
136
196
140
142
156
144
174

FIG. 5

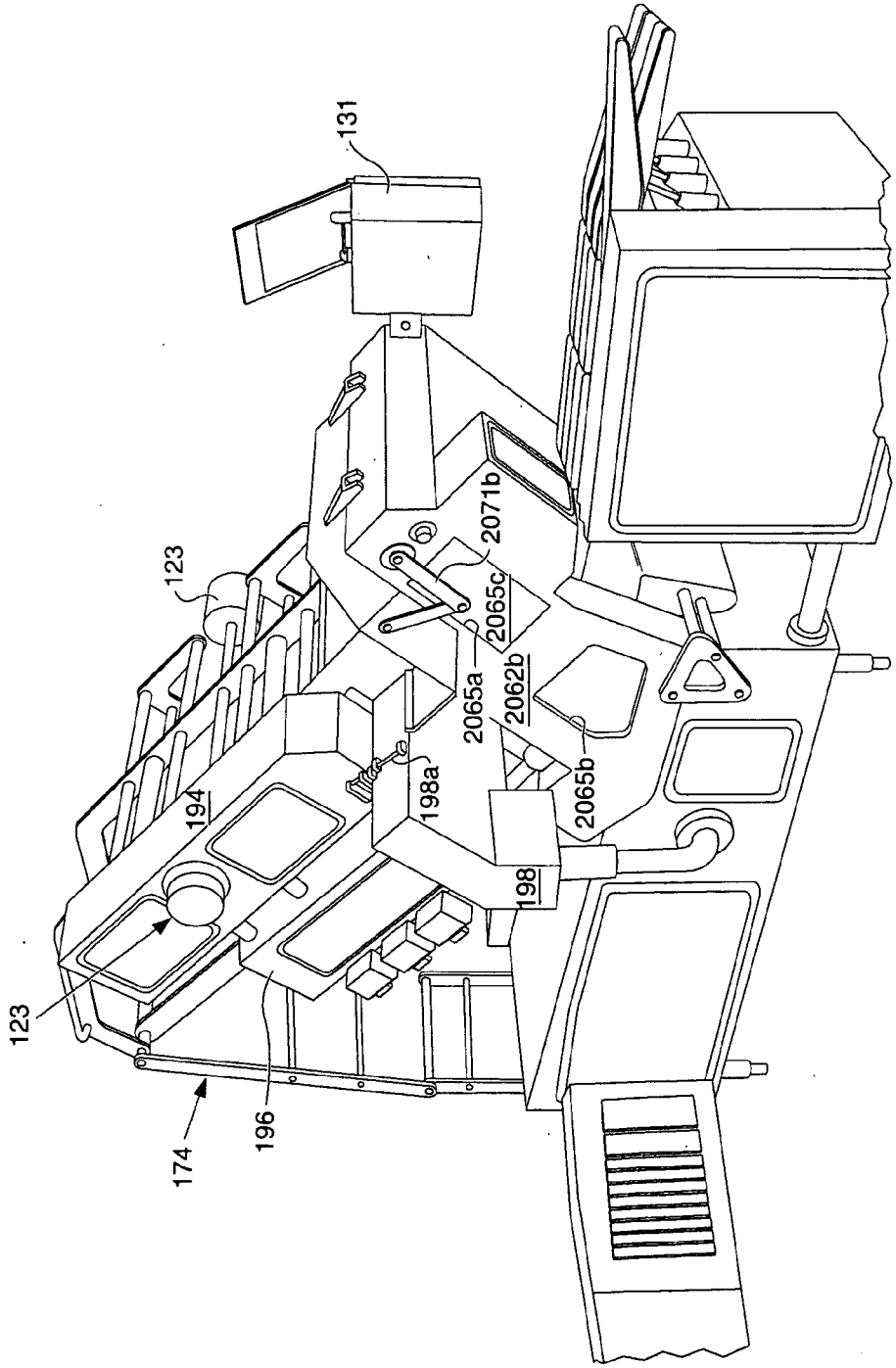
131
123
2071b
2065c
2065a
2062b
2065b
198a
194
198
123
174
196

FIG. 6

FIG. 7

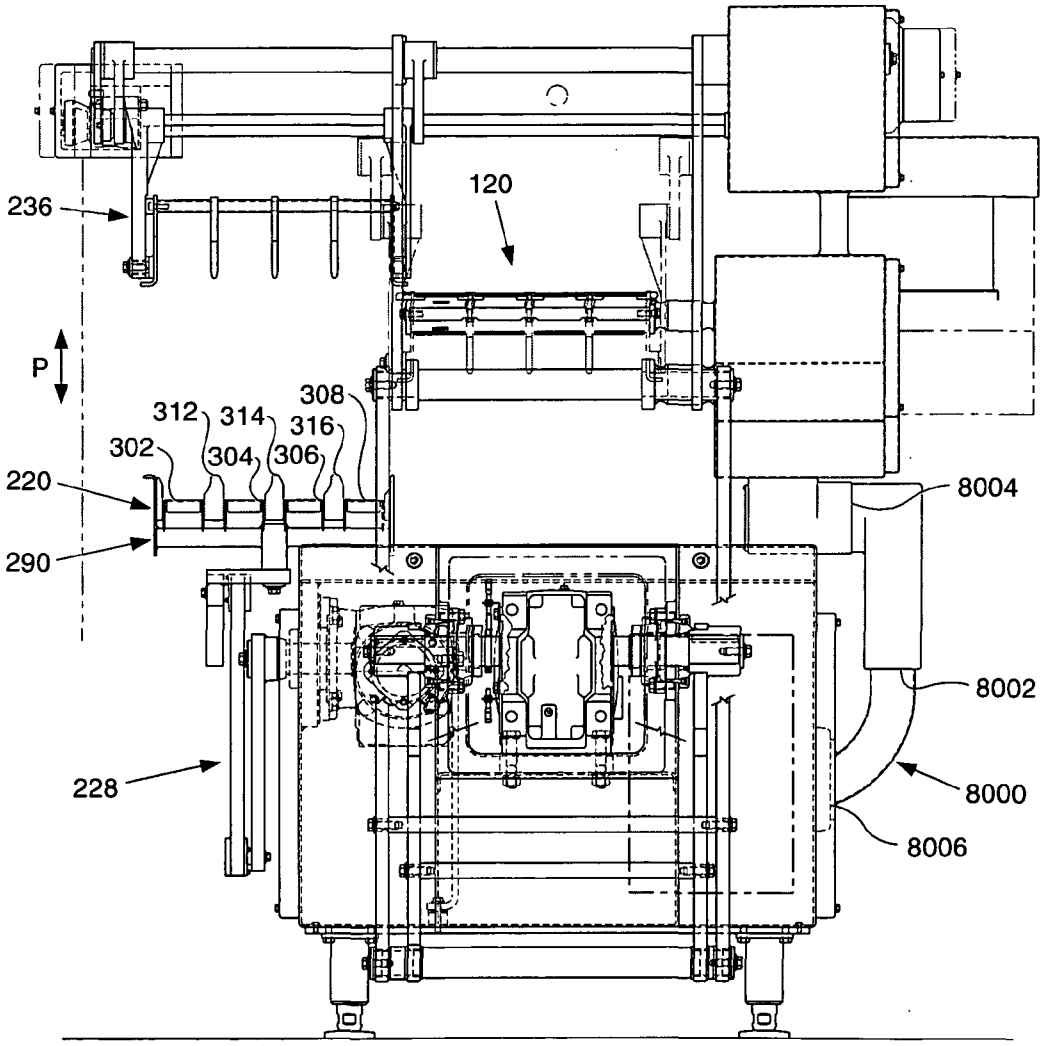
236
120
P
308
312
314
316
302
304
306
220
290
8004
8002
228
8000
8006

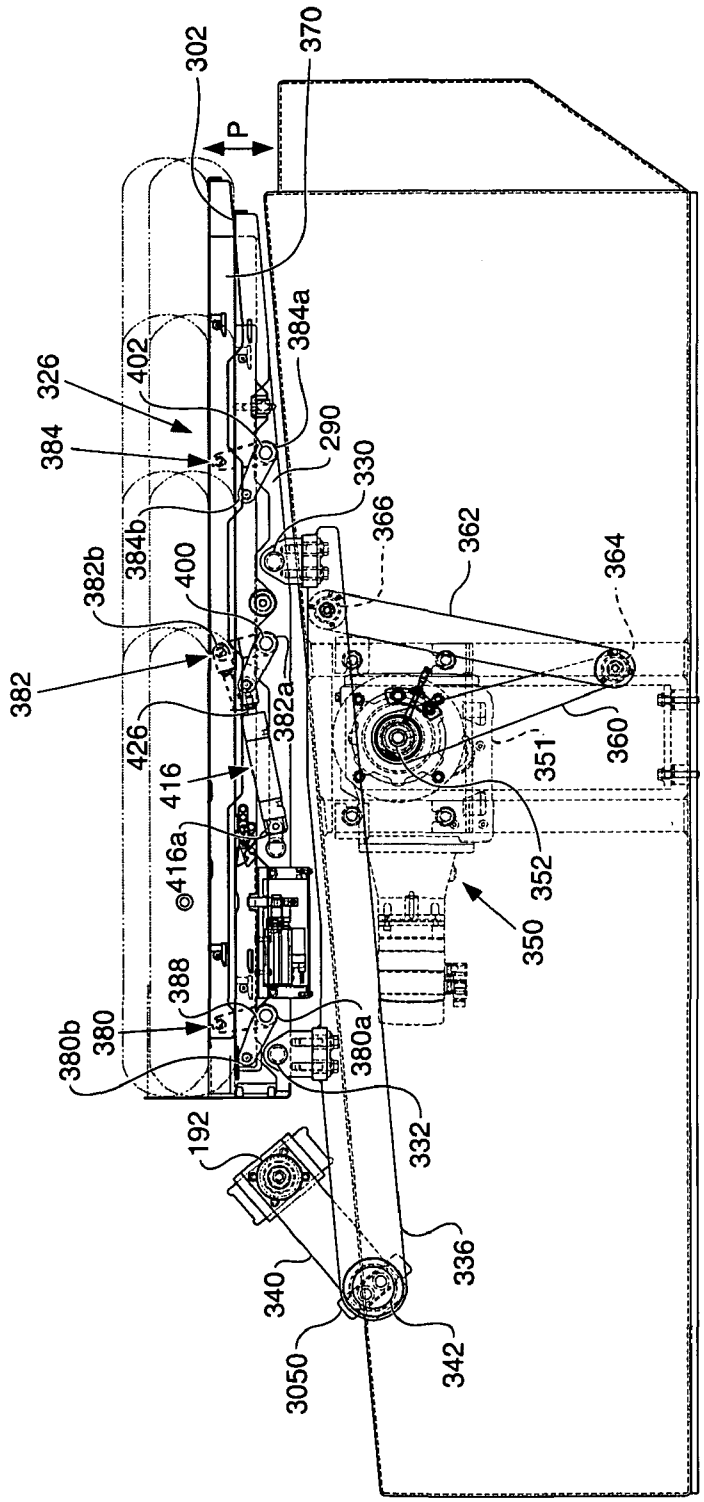
302
370
P
384a
402
326
384
290
330
366
362
364
384b
400
382b
382
382a
426
416
416a
351
360
352
350
388
380
380b
380a
332
192
336
340
342
3050

FIG. 8

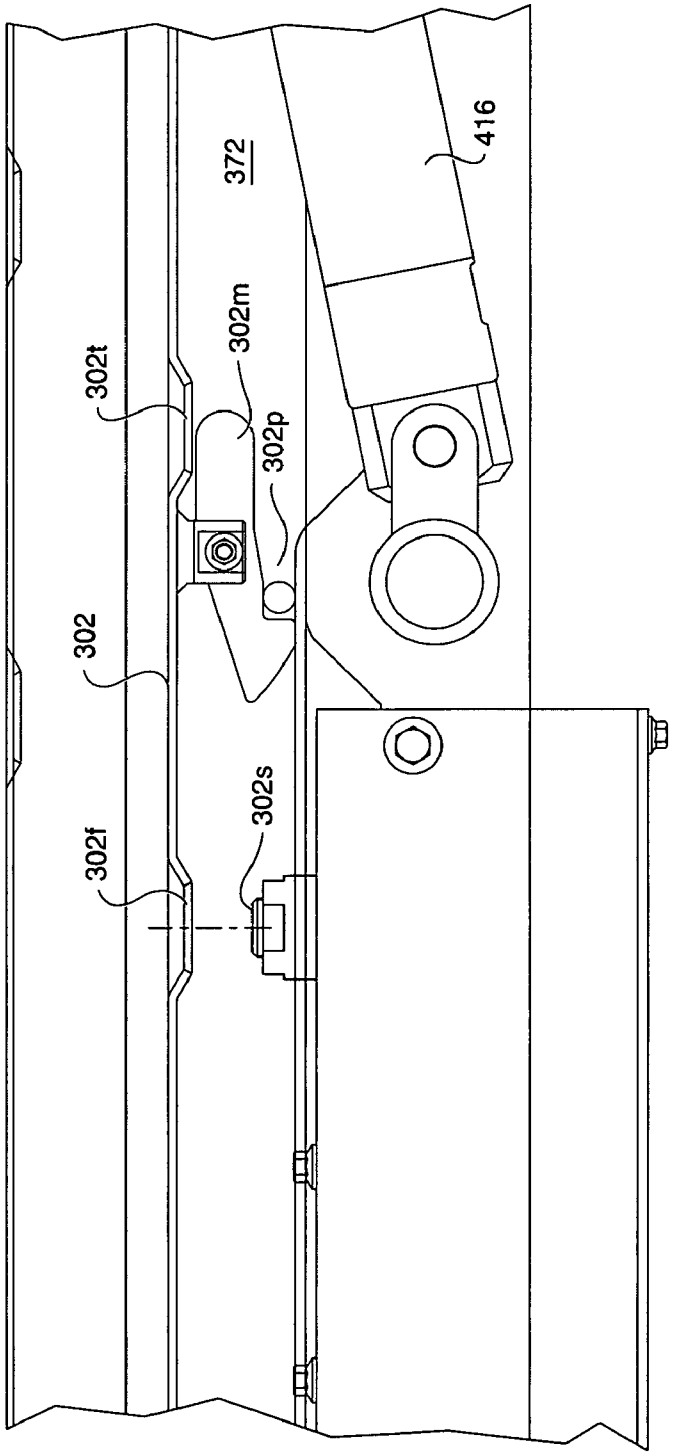

FIG. 8A

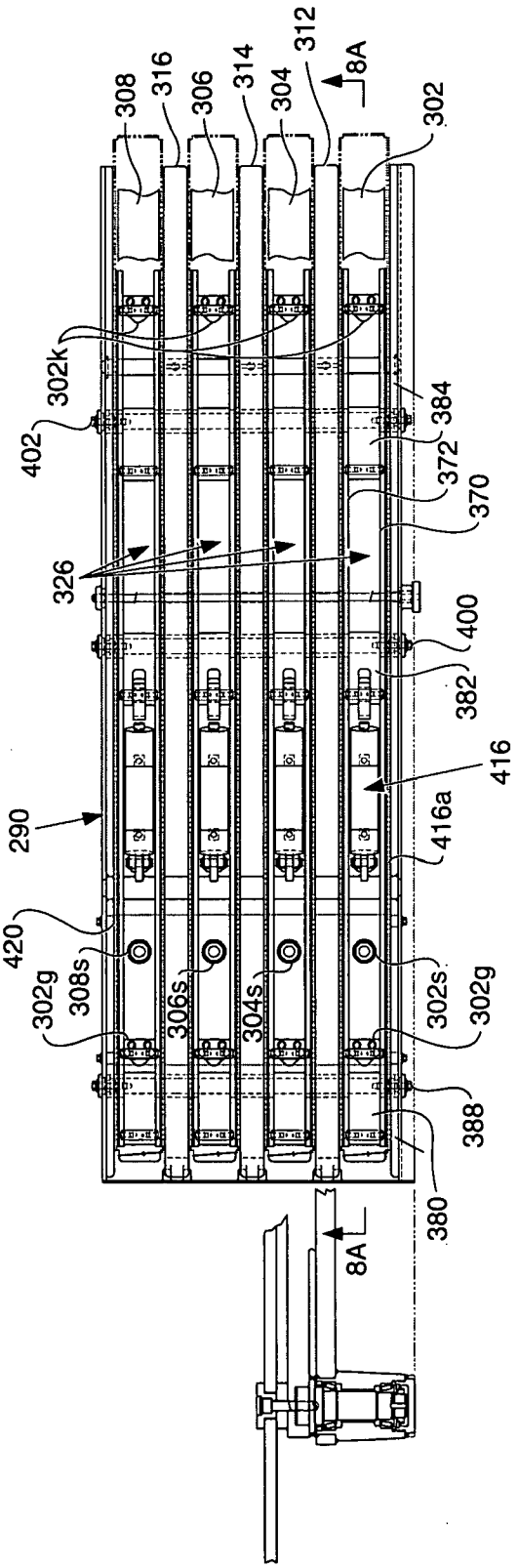
308
316
306
314
304
312
8A
302
302k
402
384
372
370
326
400
382
416
290
416a
420
302g
308s
306s
304s
302s
302g
388
380
8A

FIG. 9

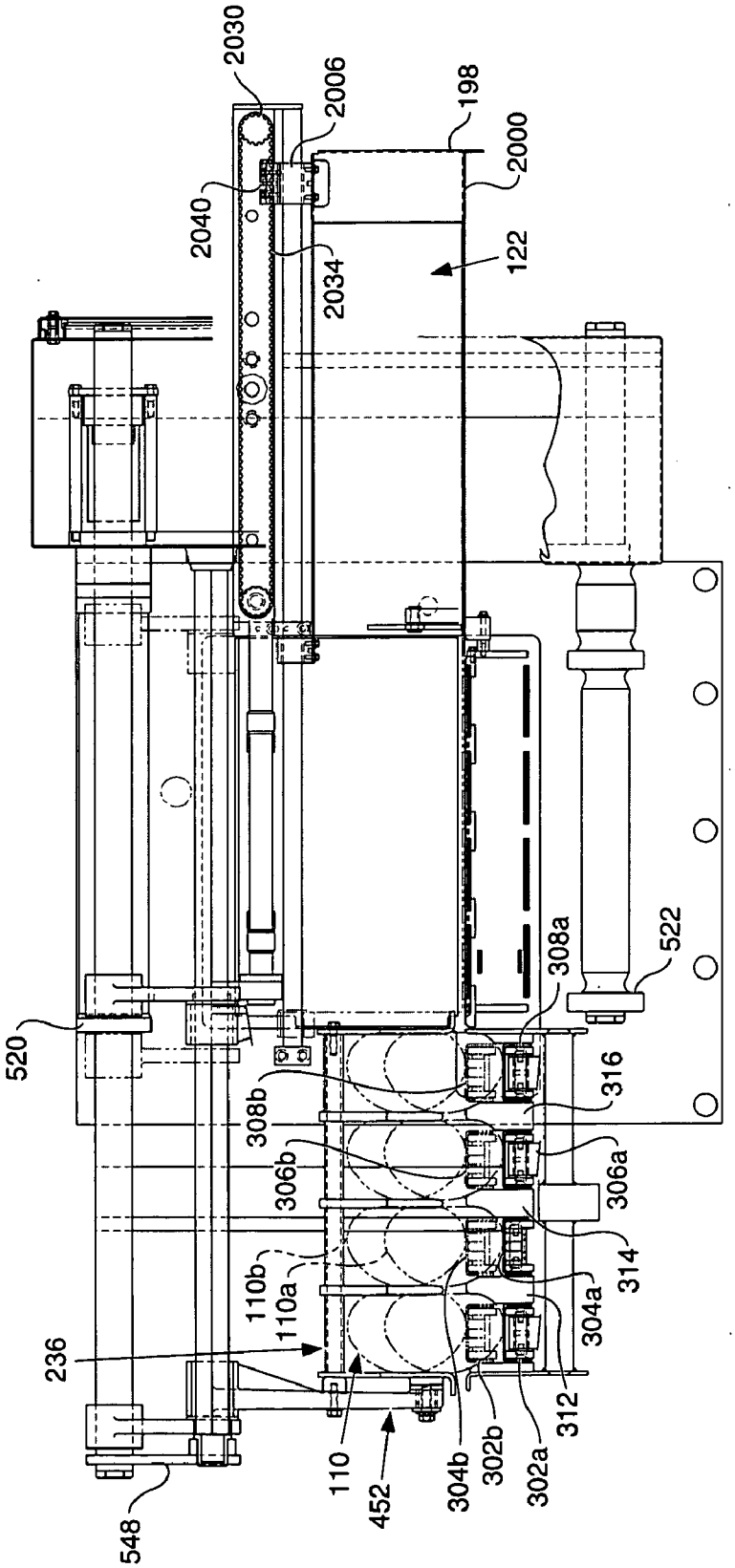
2030
2006
198
2000
2040
2034
122
520
308a
522
308b
316
306b
306a
110b
110a
314
304a
236
312
110
452
304b
302b
302a
548

FIG. 10

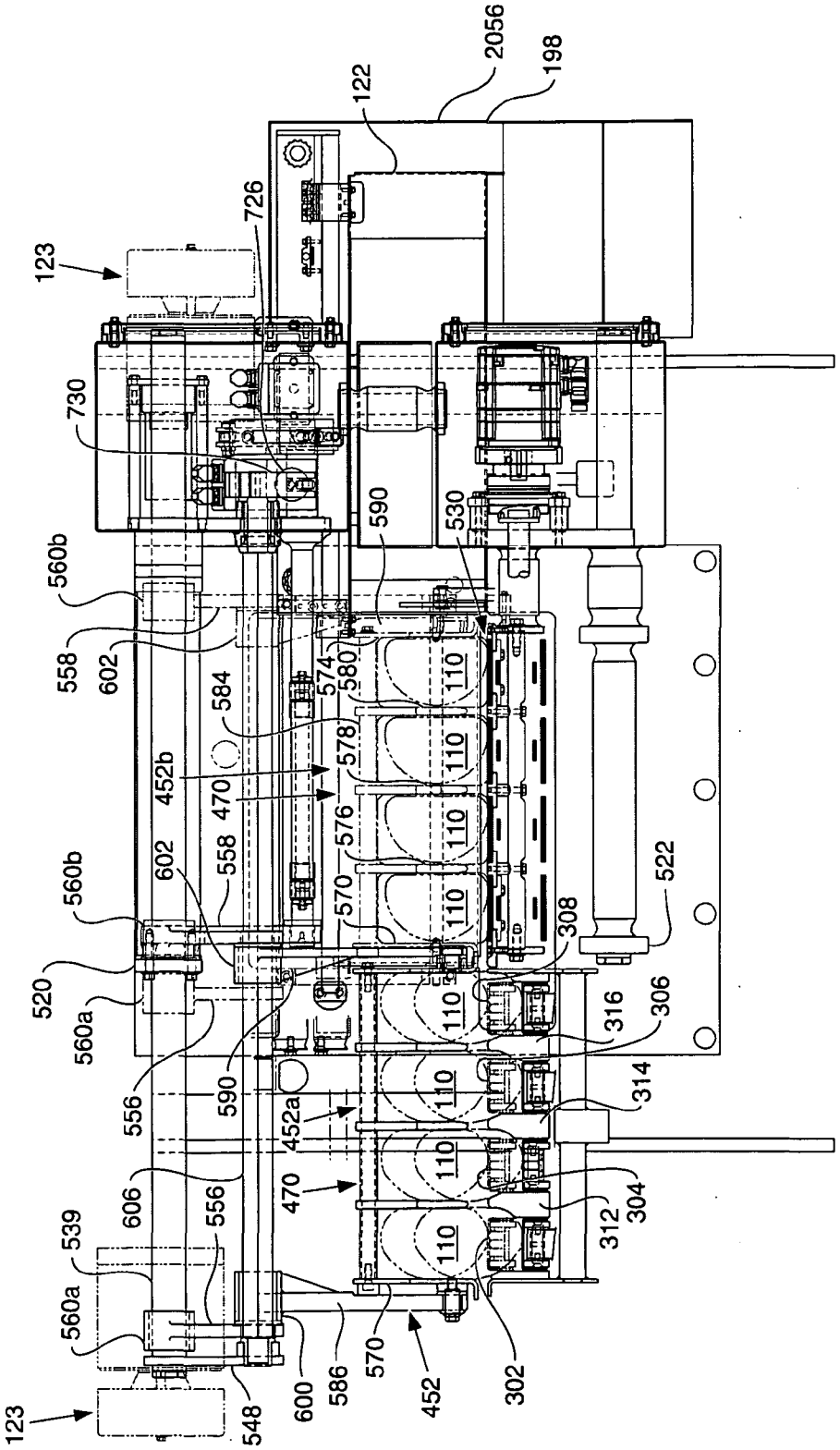
2056
198
122
726
123
730
590
530
560b
558
602
574
580
584
110
578
452b
470
576
570
522
308
520
560a
316
306
556
452a
314
606
304
312
539
548
600
586
452
302

FIG. 11

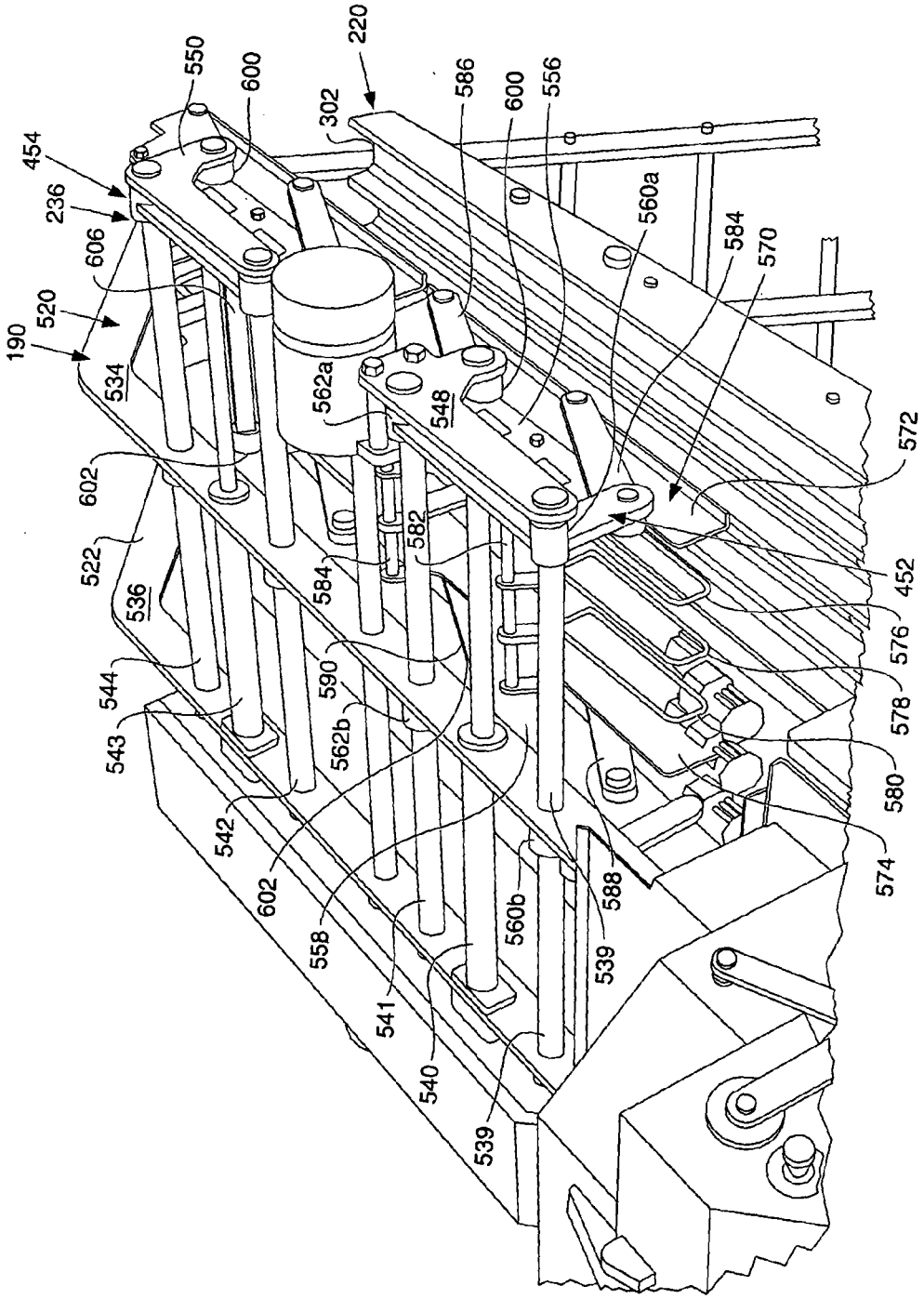
220
302
550
600
586
600
556
454
236
606
520
190
534
560a
584
570
562a
548
572
602
522
536
582
584
452
576
590
578
544
543
562b
580
542
602
574
558
560b
588
539
541
540
539

FIG. 12

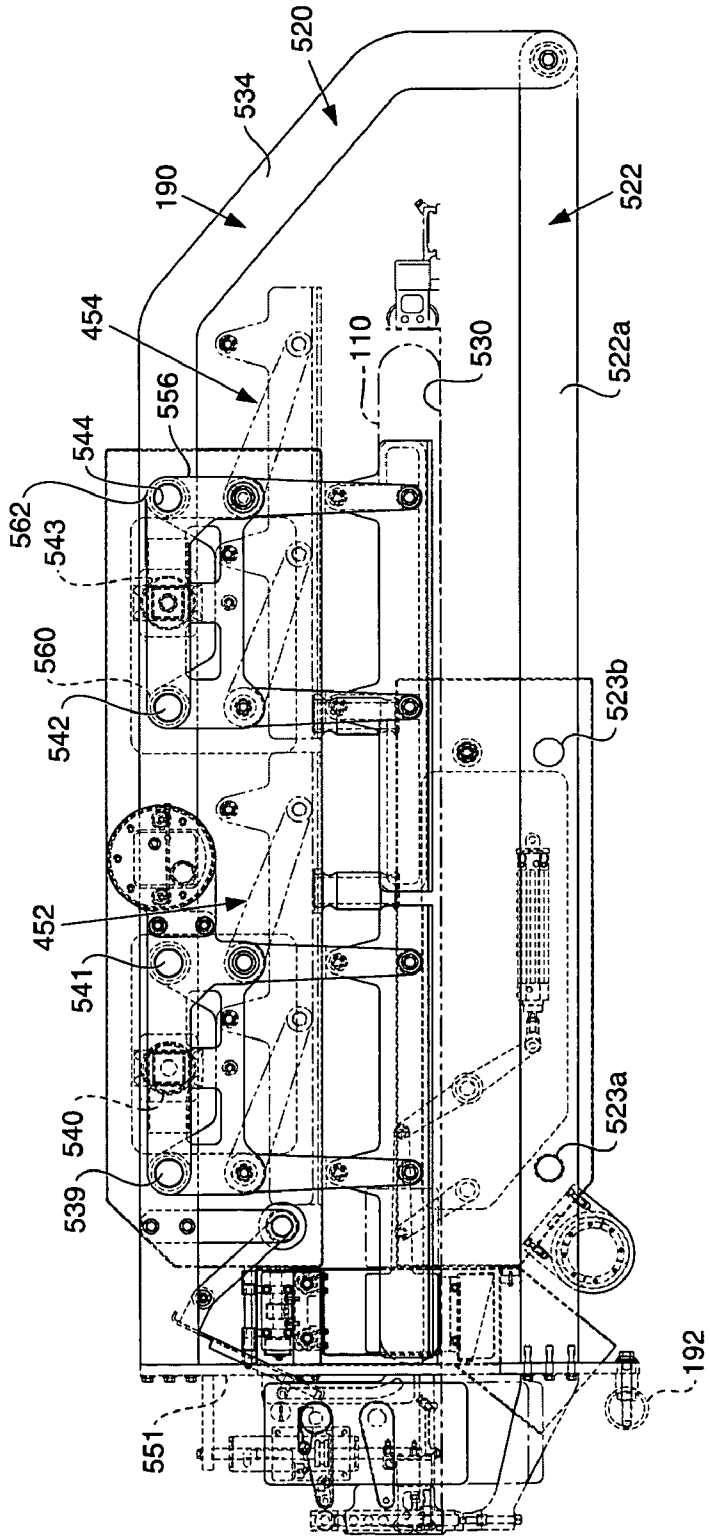
520
534
190
522
454
110
530
522a
556
544
562
543
560
542
523b
452
541
540
523a
539
192
551

FIG. 12A

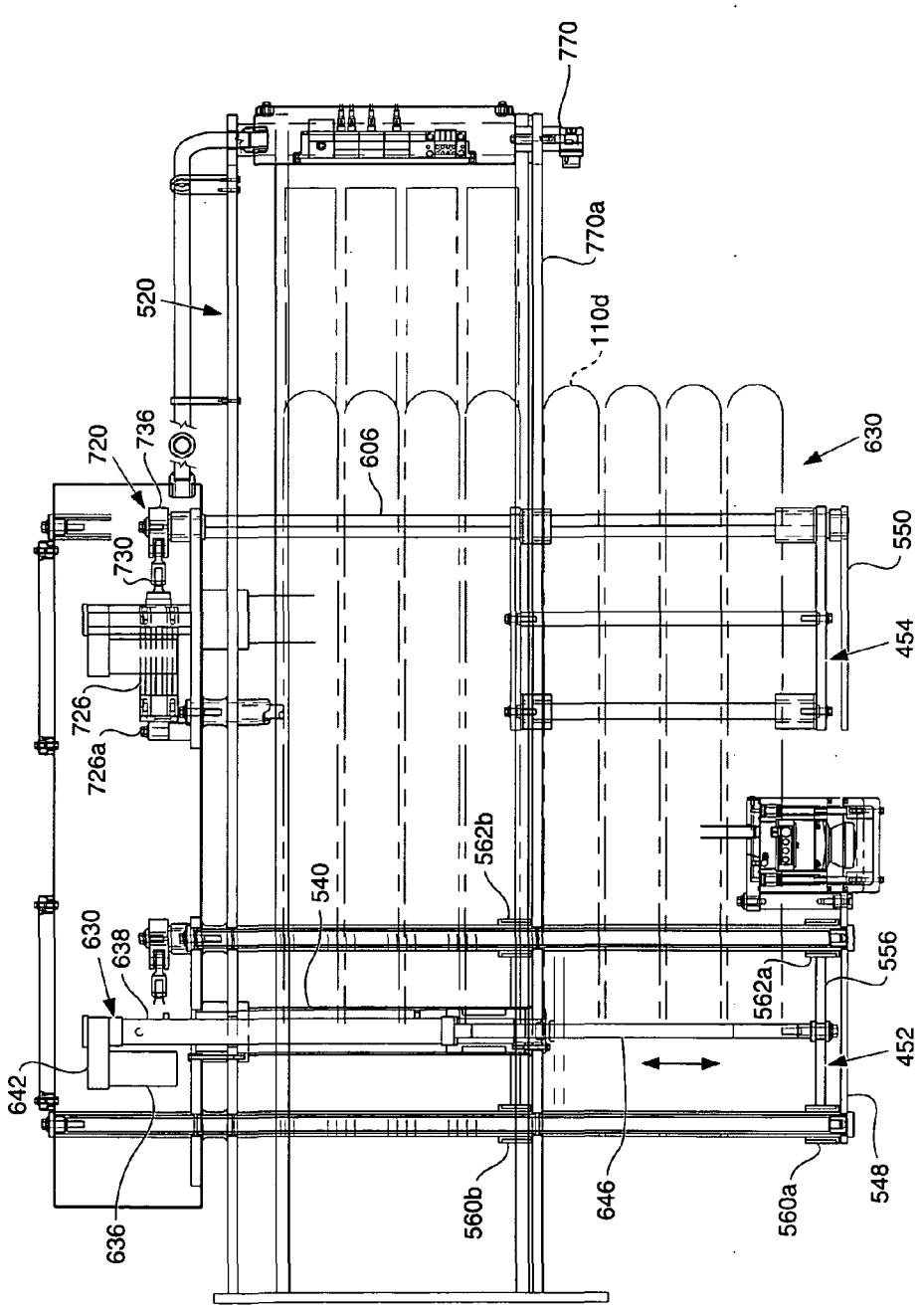
770
770a
110d
520
720
736
730
726
726a
606
630
550
454
562b
540
630
638
642
636
562a
556
452
548
560b
646
560a

FIG. 13

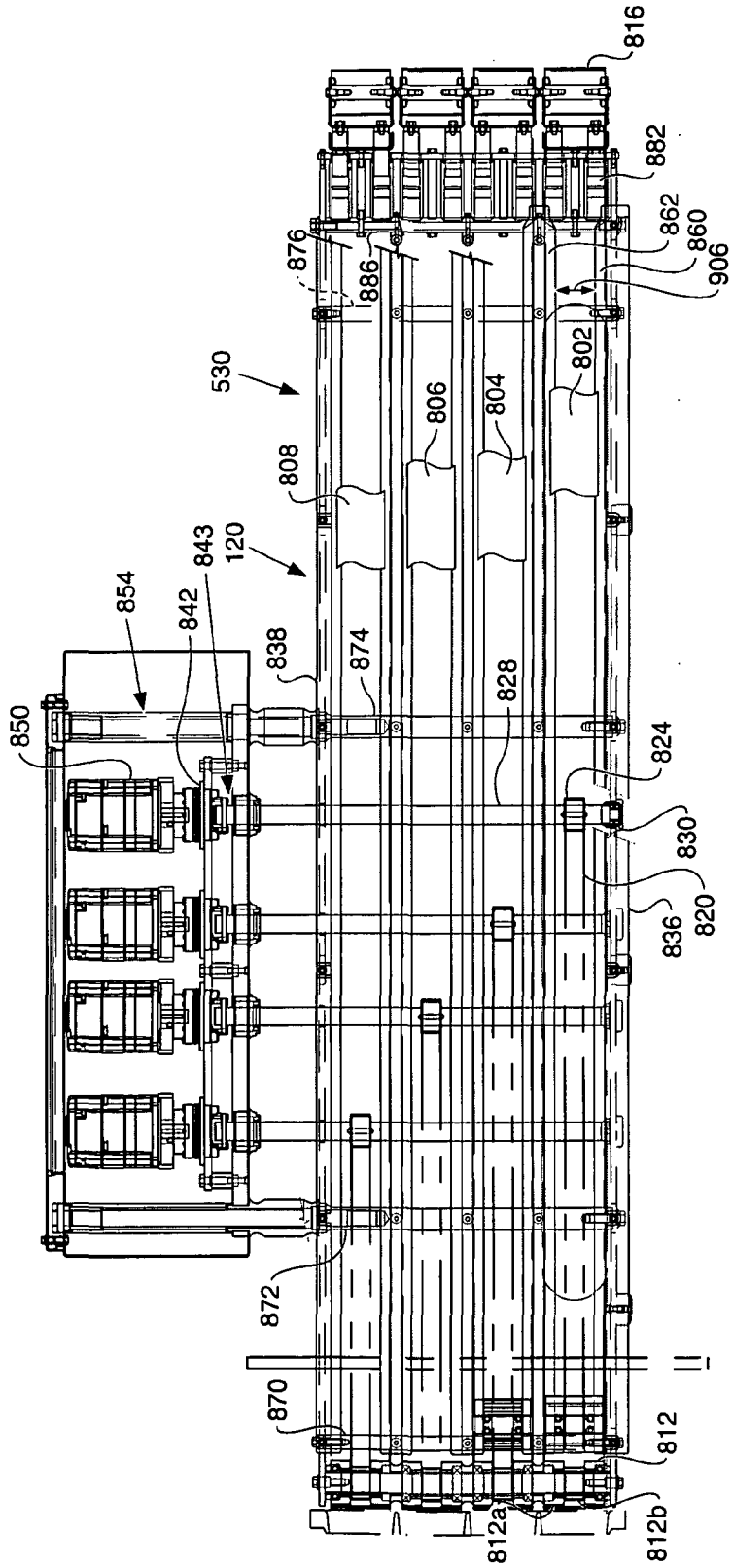
816
882
862
860
906
876
886
802
530
806
804
808
843
120
854
842
838
874
828
850
824
830
820
836
872
870
812
812a
812b

FIG. 14

FIG. 15

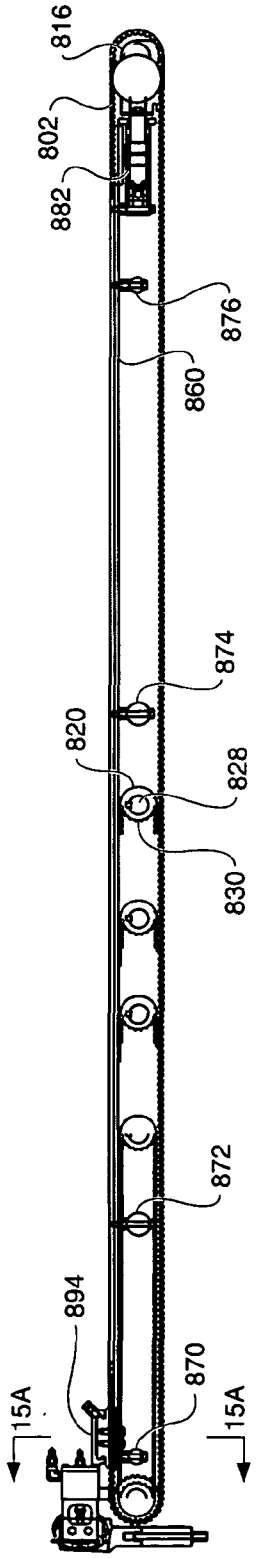

FIG. 15A

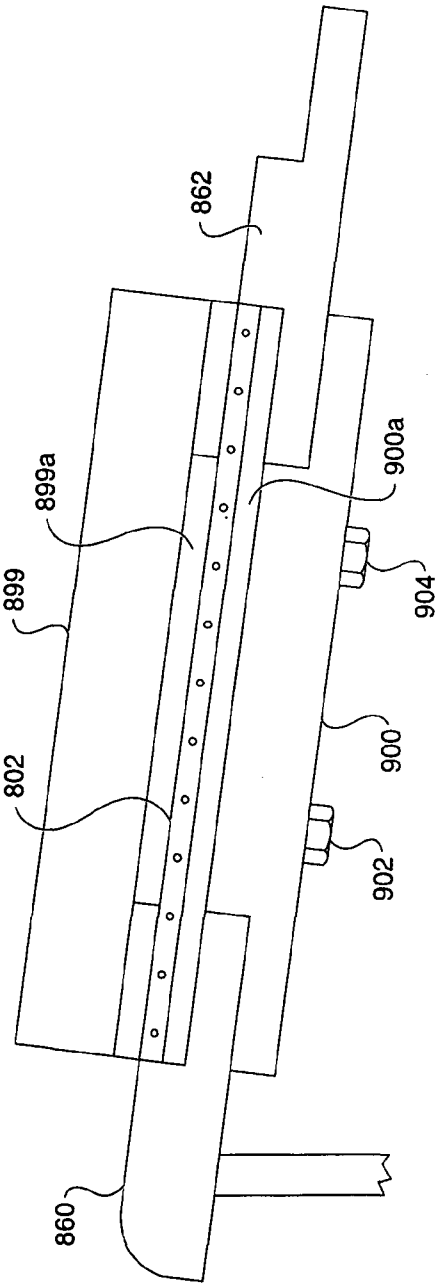

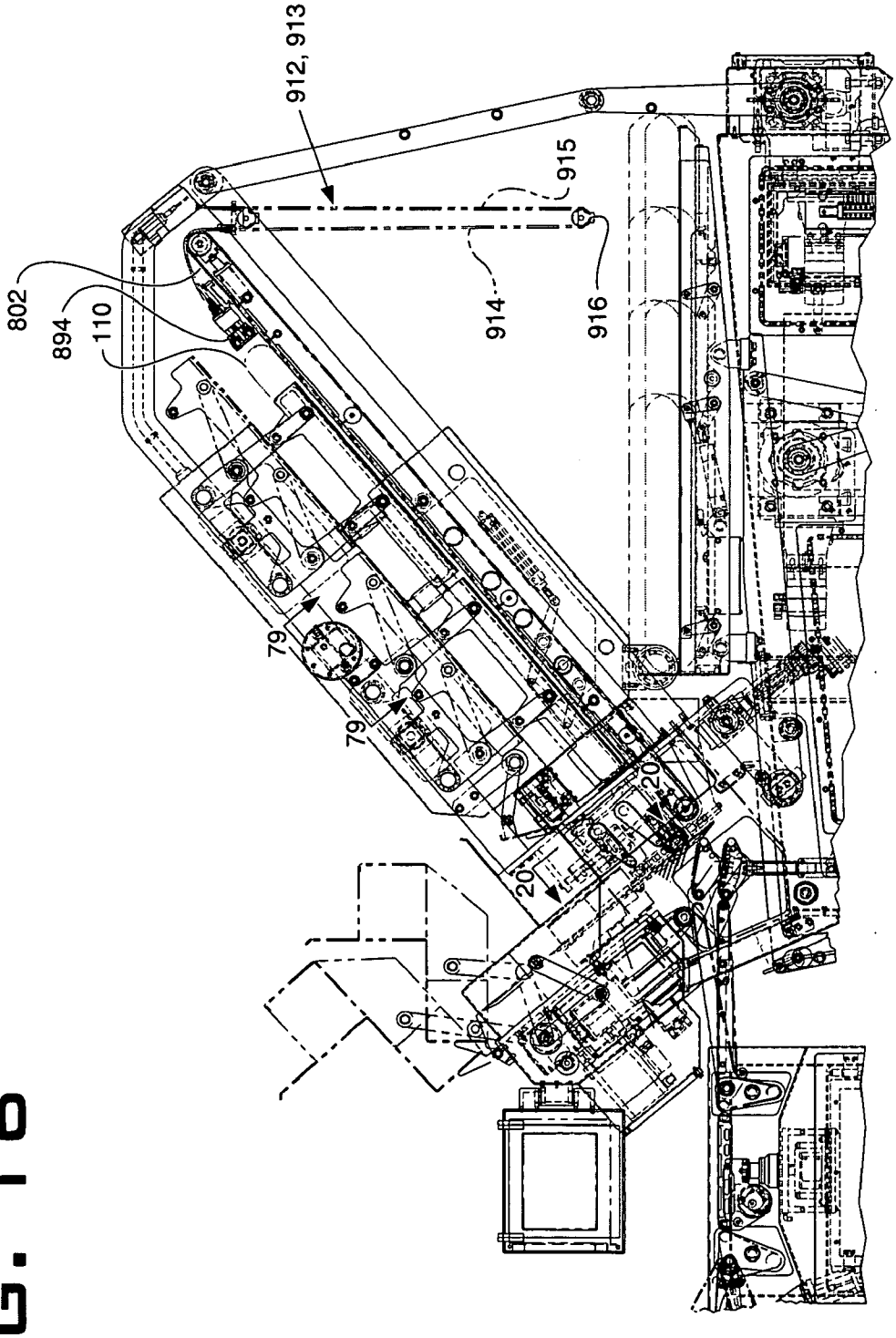

FIG. 16

FIG. 17

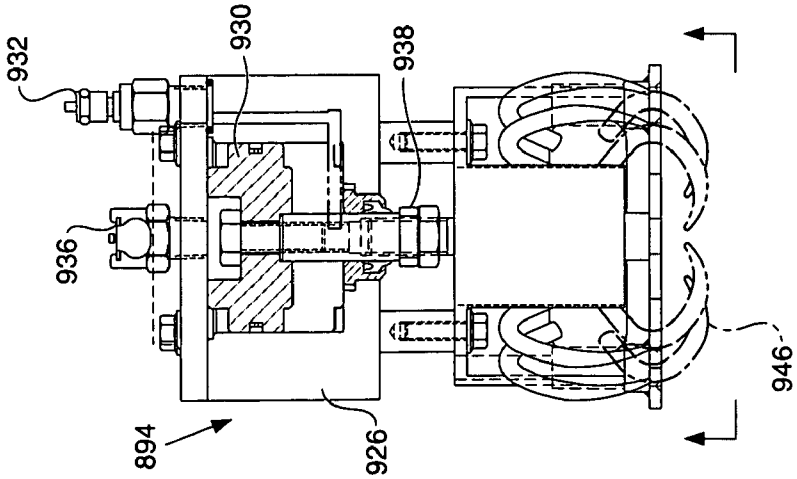

FIG. 17A

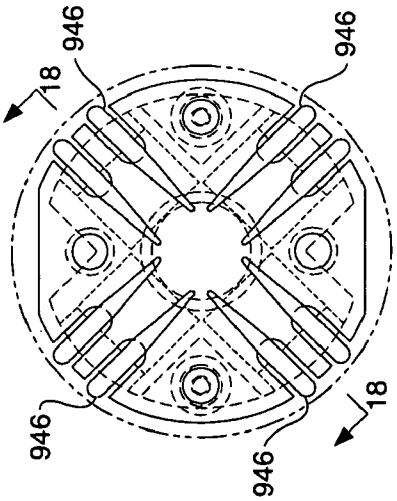

FIG. 18

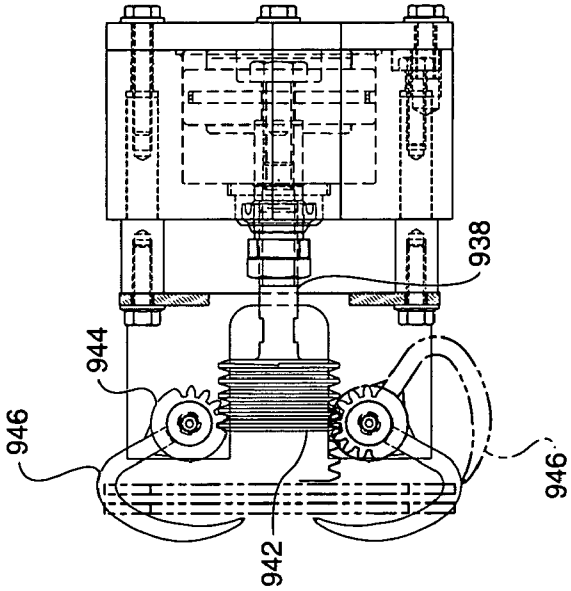

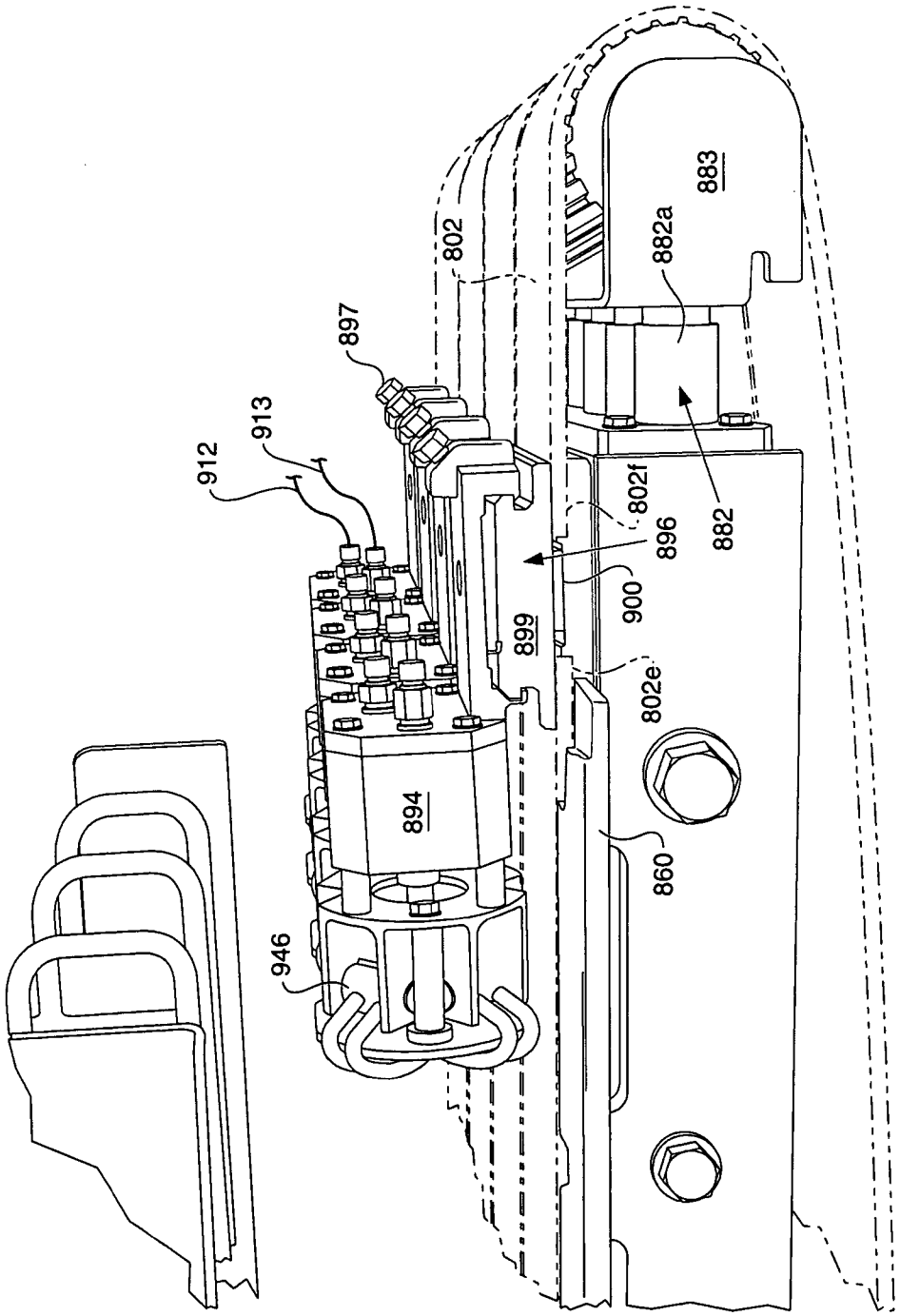

FIG. 19

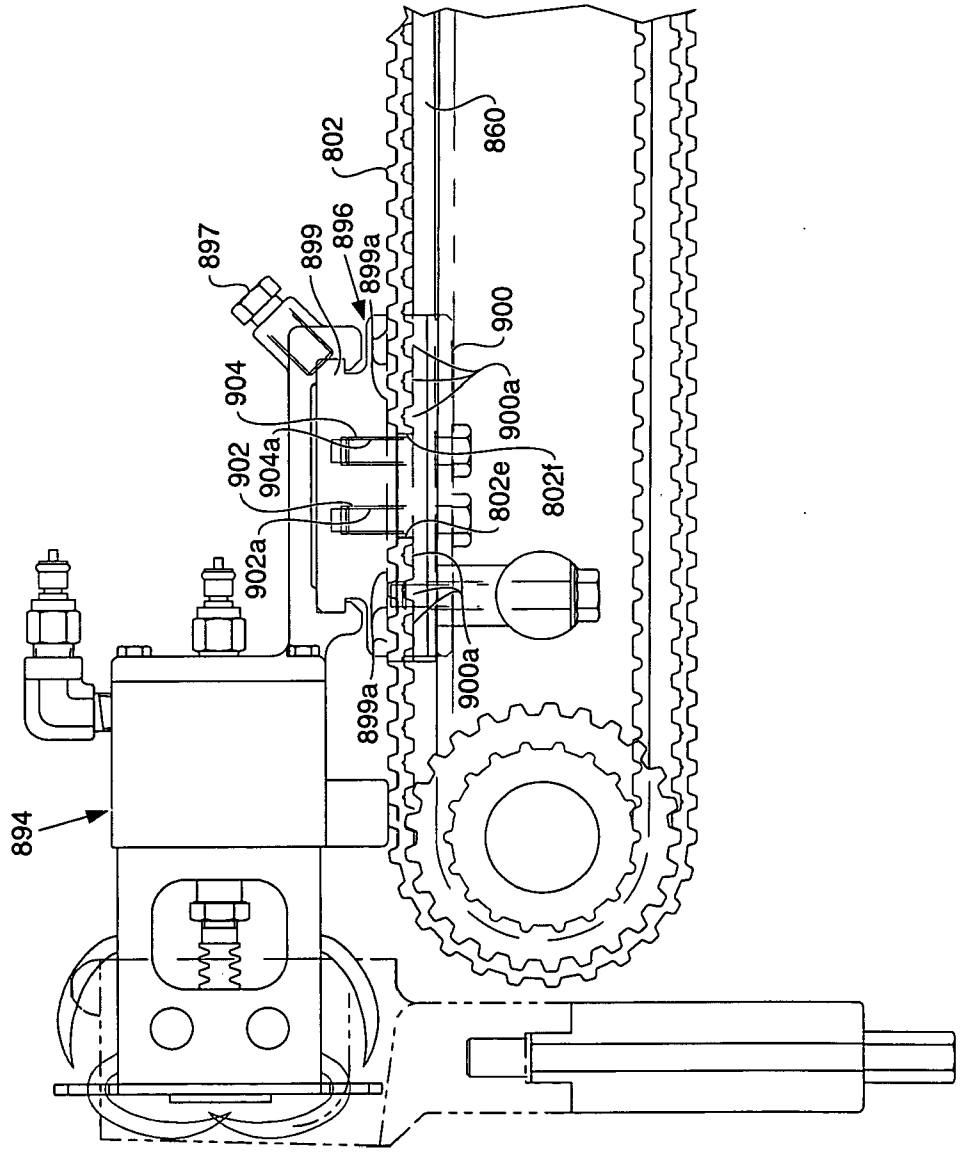
894
897
899
896
899a
904
902
904a
902a
802
860
900
900a
802e
802f
900a
899a

FIG. 20

FIG. 21

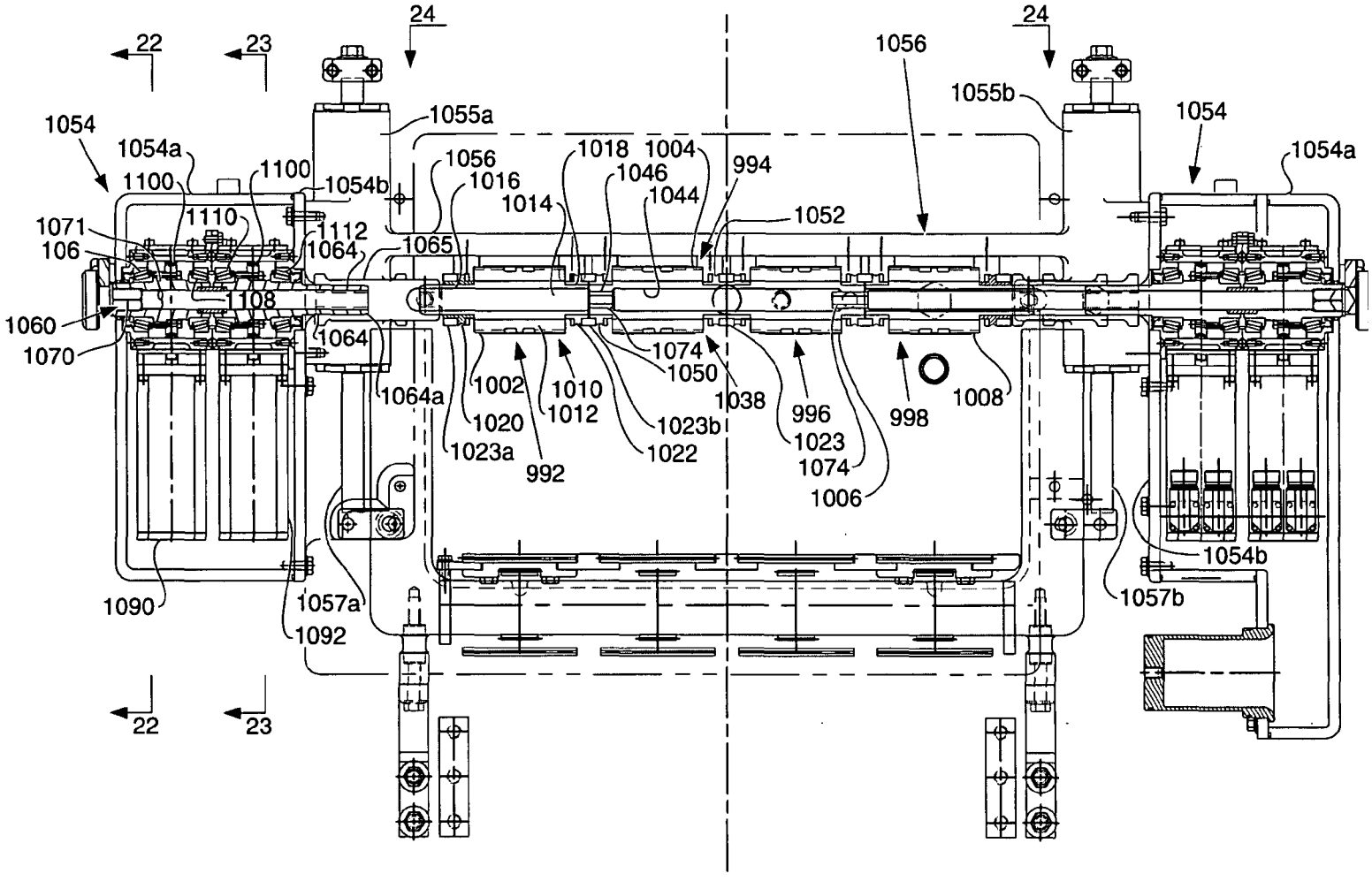
22
23
24
24
1056
1055b
1054
1054a
1055a
1054
1054a
1100
1100
1054b
1056
1016
1018
1004
1046
1044
994
1014
1052
1071
106
1110
1112
1064
1065
1108
1060
1070
1064
1064a
1002
1020
1023a
992
1010
1012
1074
1050
1023b
1022
1038
996
1023
1074
1006
998
1008
1054b
1057b
1090
1057a
1092
22
23

FIG. 23

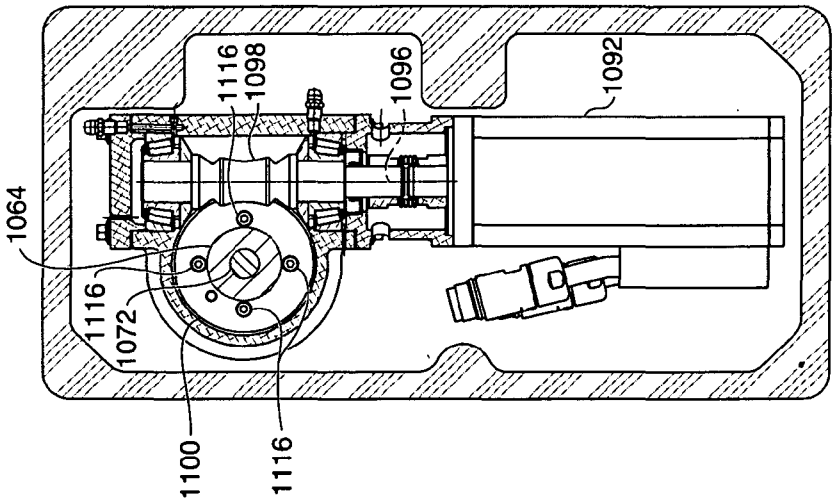
1064
1116
1072
1100
1116
1098
1116
1096
1092

FIG. 22

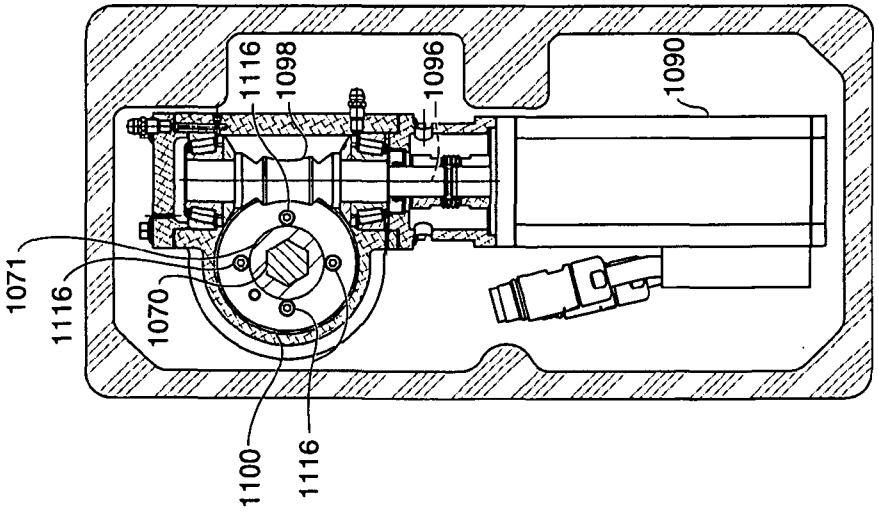
1071
1116
1070
1100
1116
1098
1116
1096
1090

FIG. 24

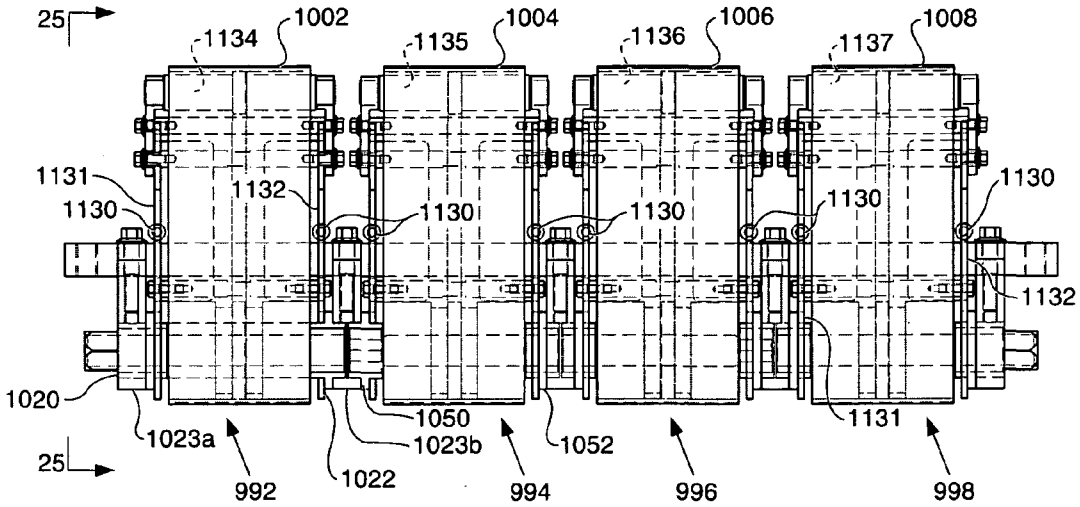
25
1134
1002
1135
1004
1136
1006
1137
1008
1131
1130
1132
1130
1130
1130
1130
1132
1020
1050
1131
1023a
1023b
1052
25
992
1022
994
996
998

FIG. 25

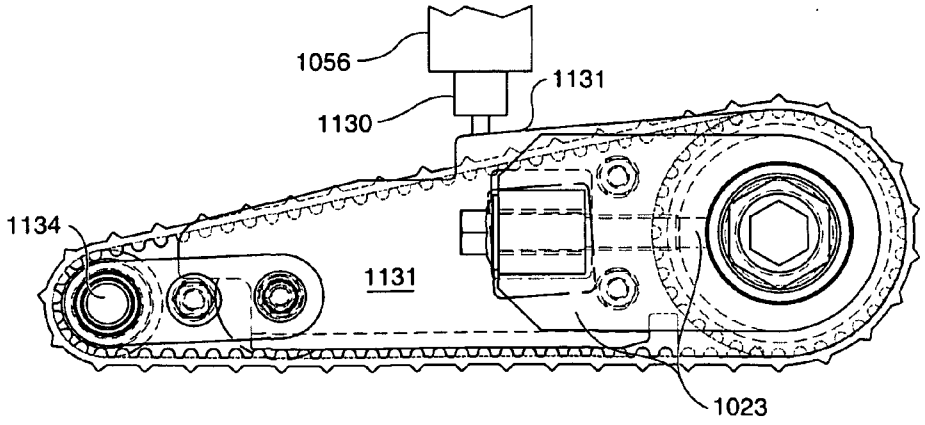
1056
1131
1130
1134
1131
1023

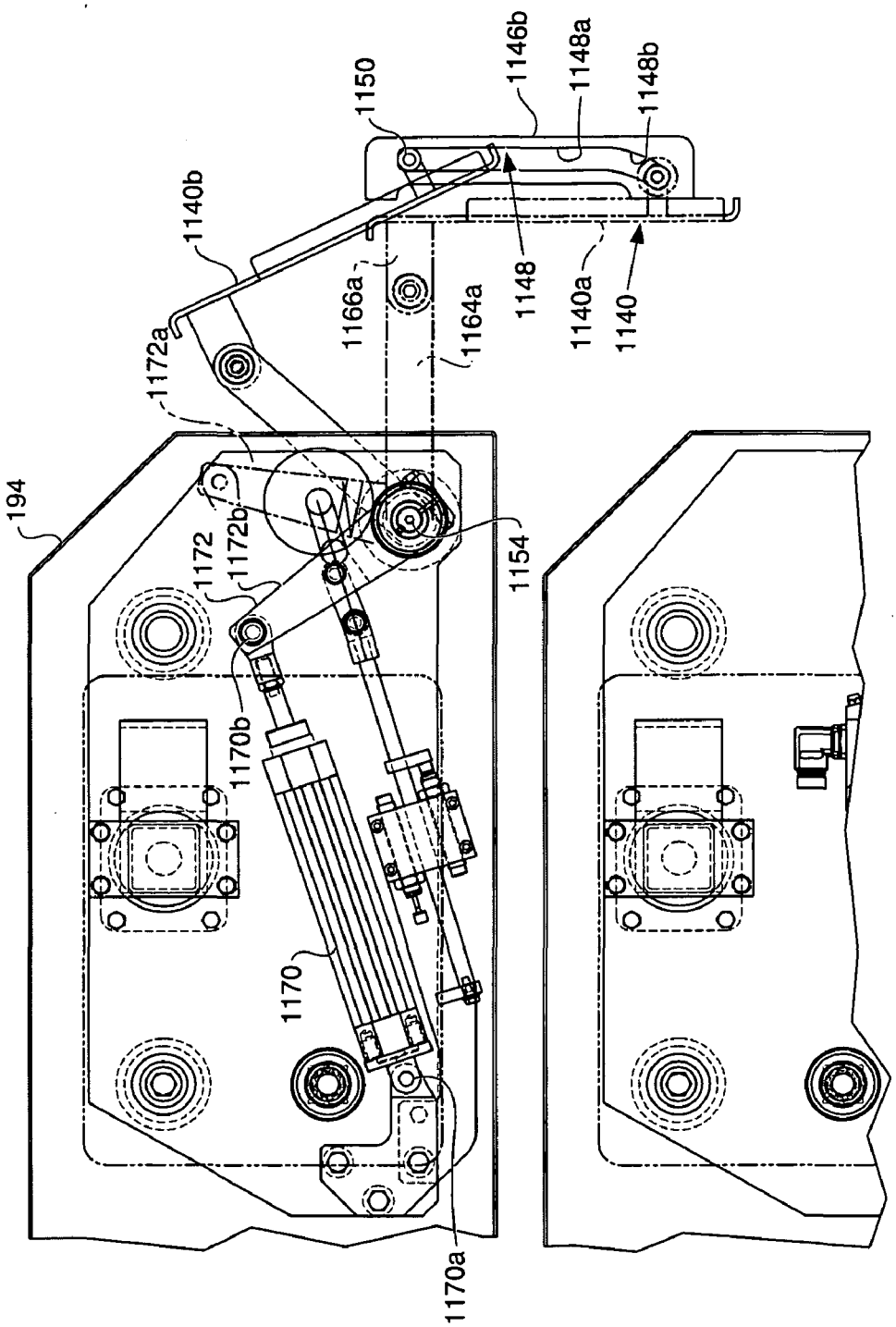
1150
1146b
1148a
1148b
1140b
1166a
1164a
1148
1140a
1140
1172a
194
1172
1172b
1154
1170b
1170
1170a

FIG. 26

FIG. 27

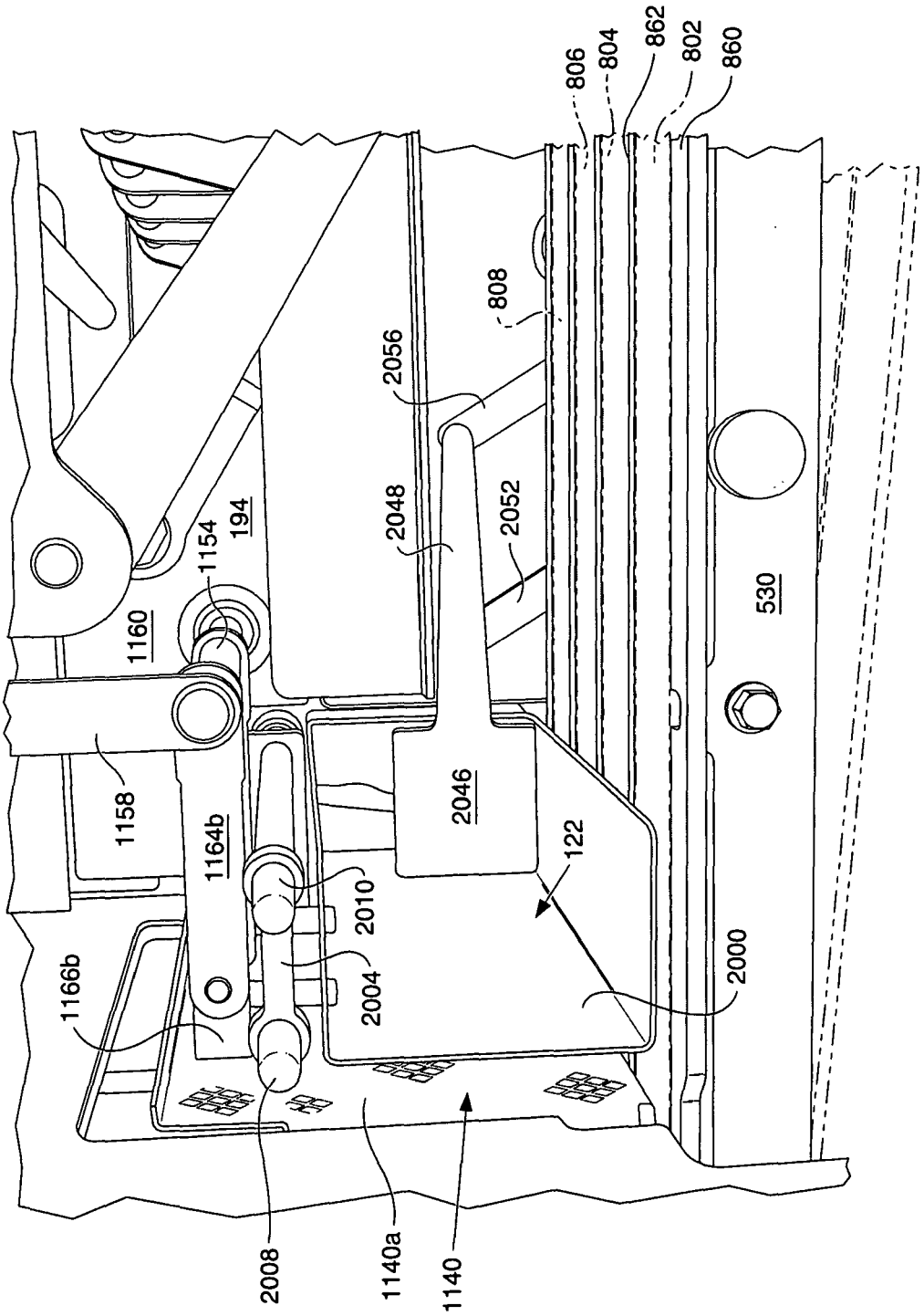
806
804
862
802
860
808
2056
2048
2052
194
1154
1160
530
1158
1164b
2046
122
2010
2004
2000
1166b
2008
1140a
1140

FIG. 28

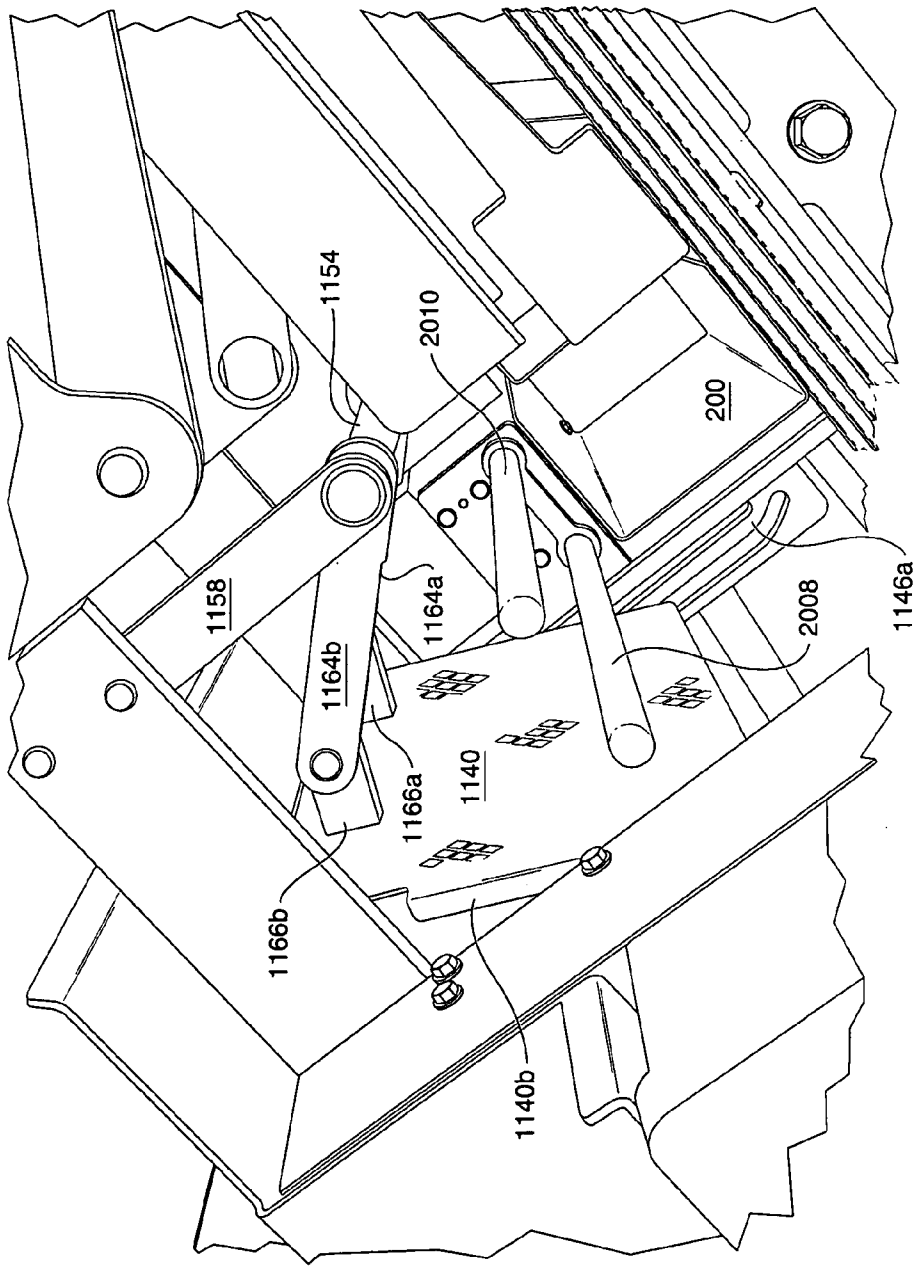
1154
2010
200
1158
1164a
1164b
1146a
2008
1166a
1140
1166b
1140b

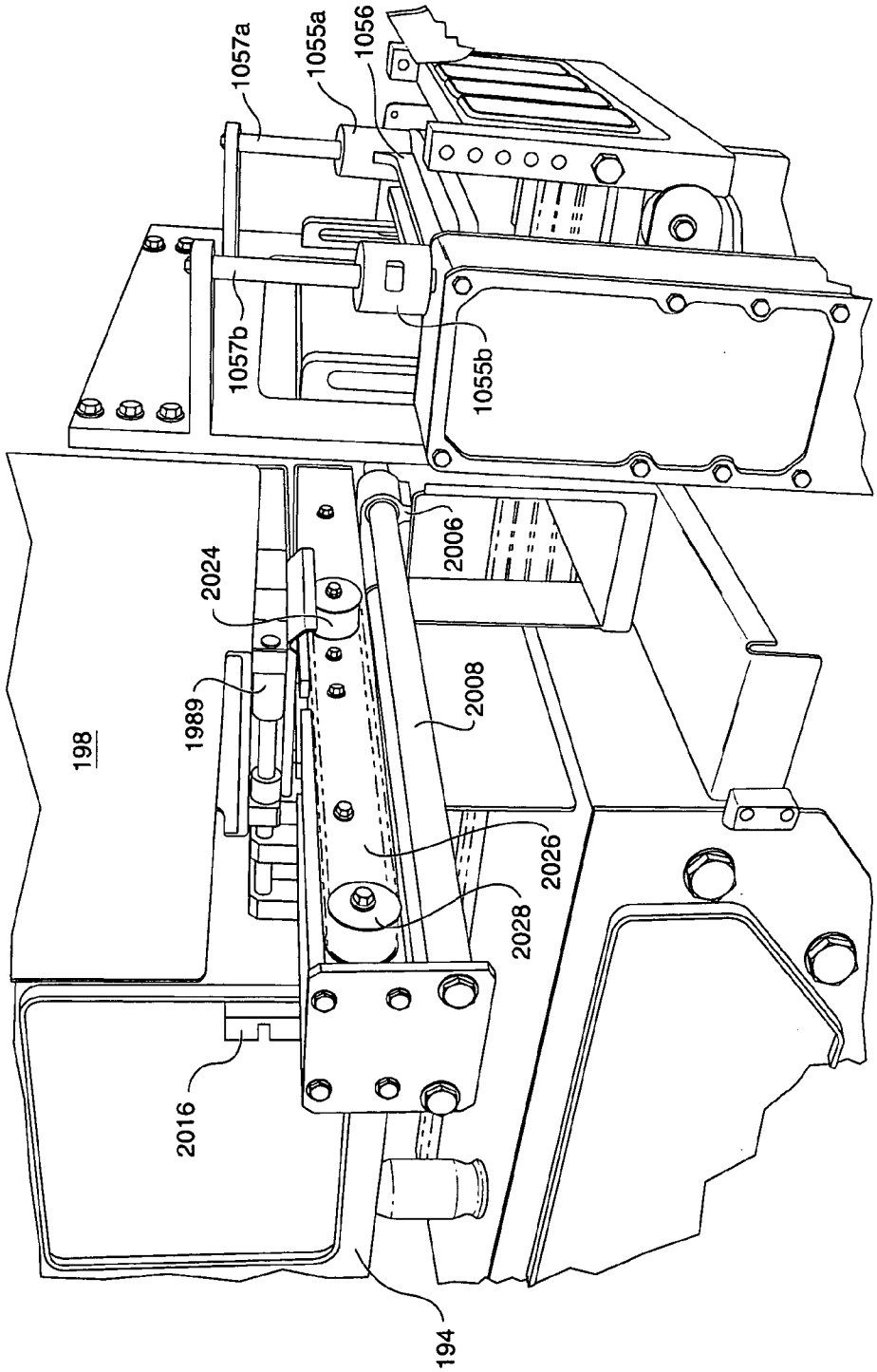
1057a
1055a
1056
1057b
1055b
2006
2024
1989
198
2008
2026
2028
2016
194

FIG. 29

FIG. 30

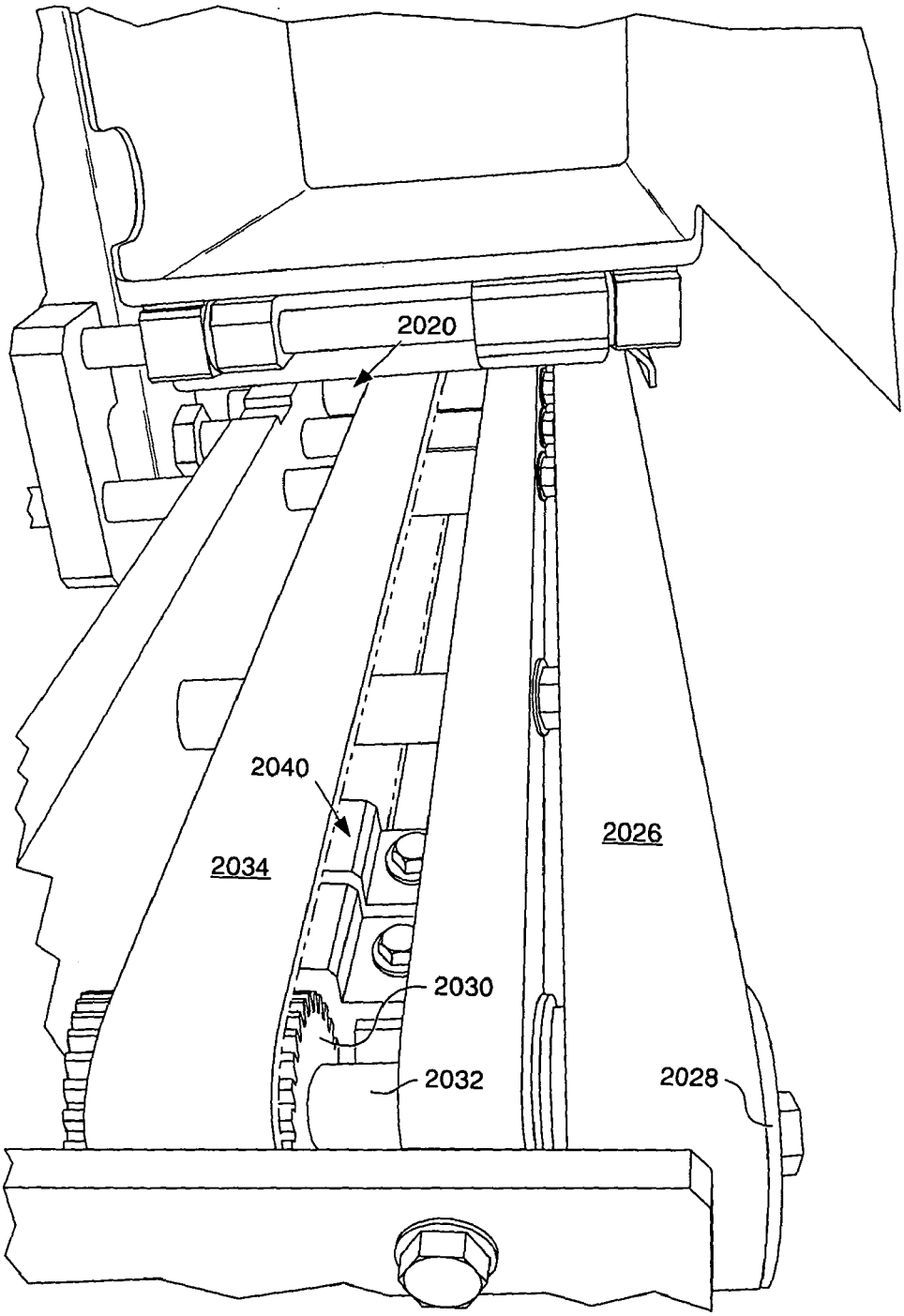

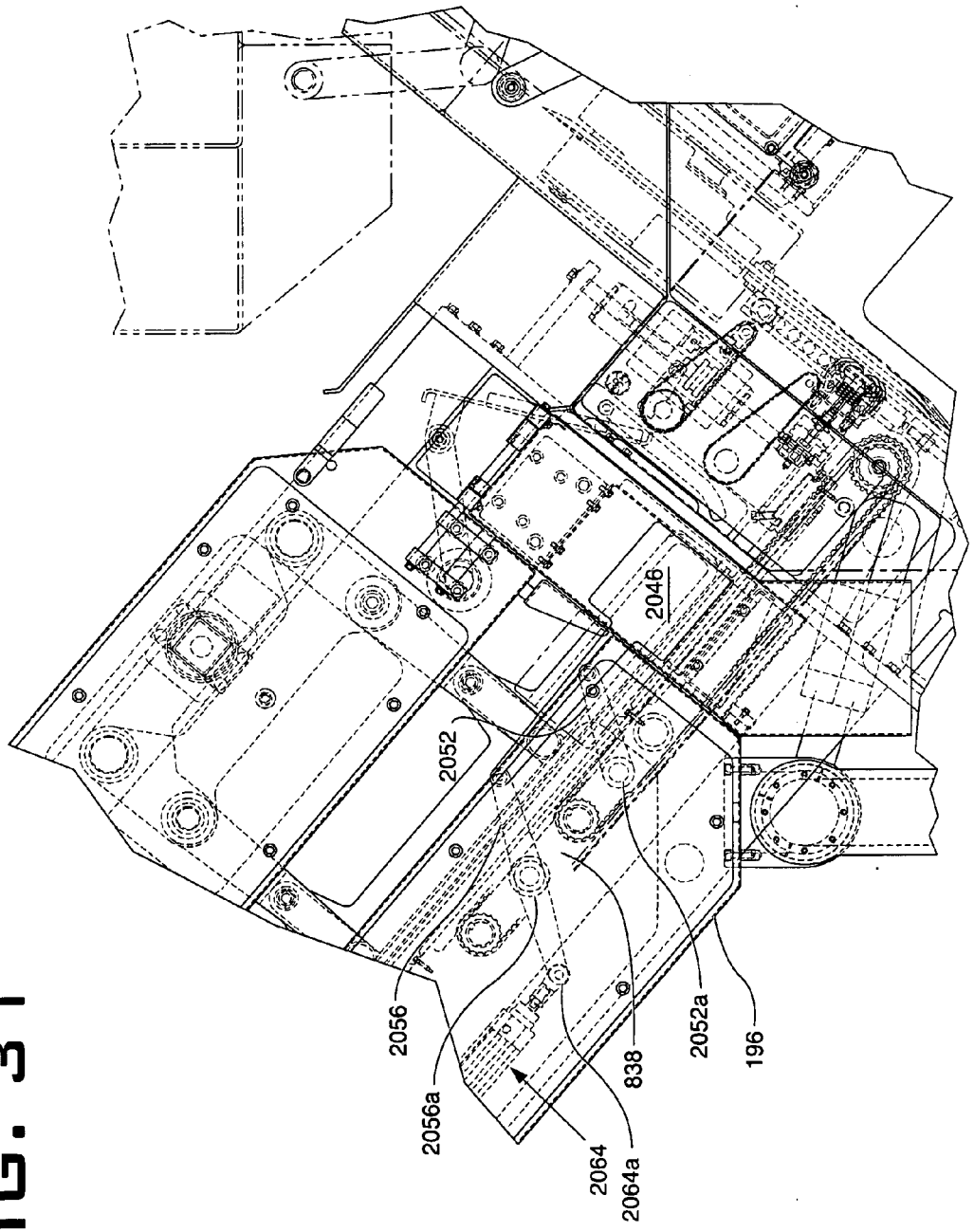

FIG. 31

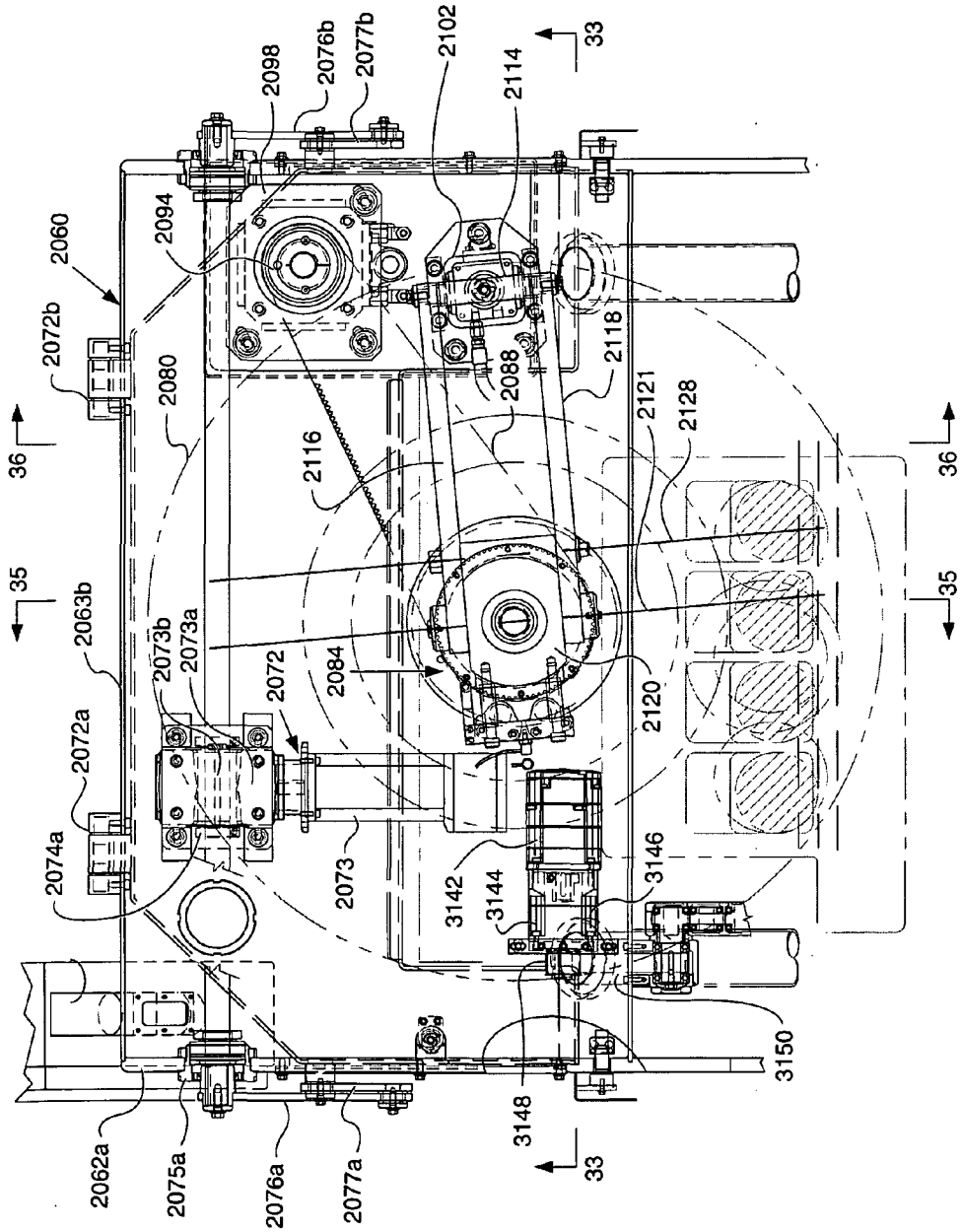
2060
2072b
2080
2094
2098
2076b
2077b
2102
2114
33
2118
2088
2121
2128
36
2116
35
2063b
2073b
2073a
2072
2084
2120
2072a
2074a
2073
3142
3144
3146
3150
3148
2062a
2075a
2076a
2077a

FIG. 32

FIG. 33

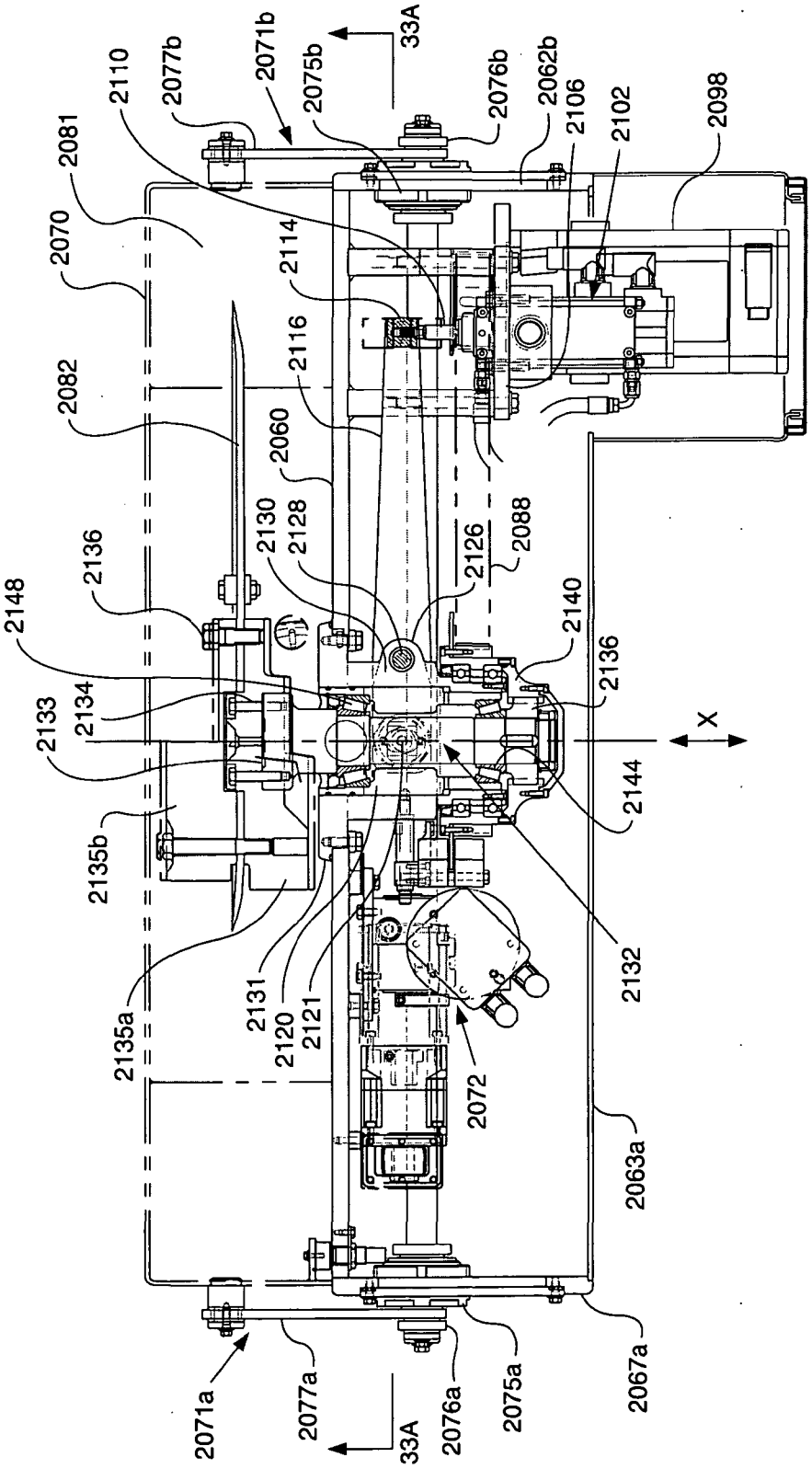
2071a
2077a
33A
2076a
2075a
2067a
2063a
2072
2131
2120
2121
2135a
2135b
2133
2134
2148
2136
2082
2070
2081
2110
2077b
2071b
2075b
33A
2076b
2062b
2106
2102
2098
2114
2116
2060
2130
2128
2126
2088
2140
2136
2144
2132
X

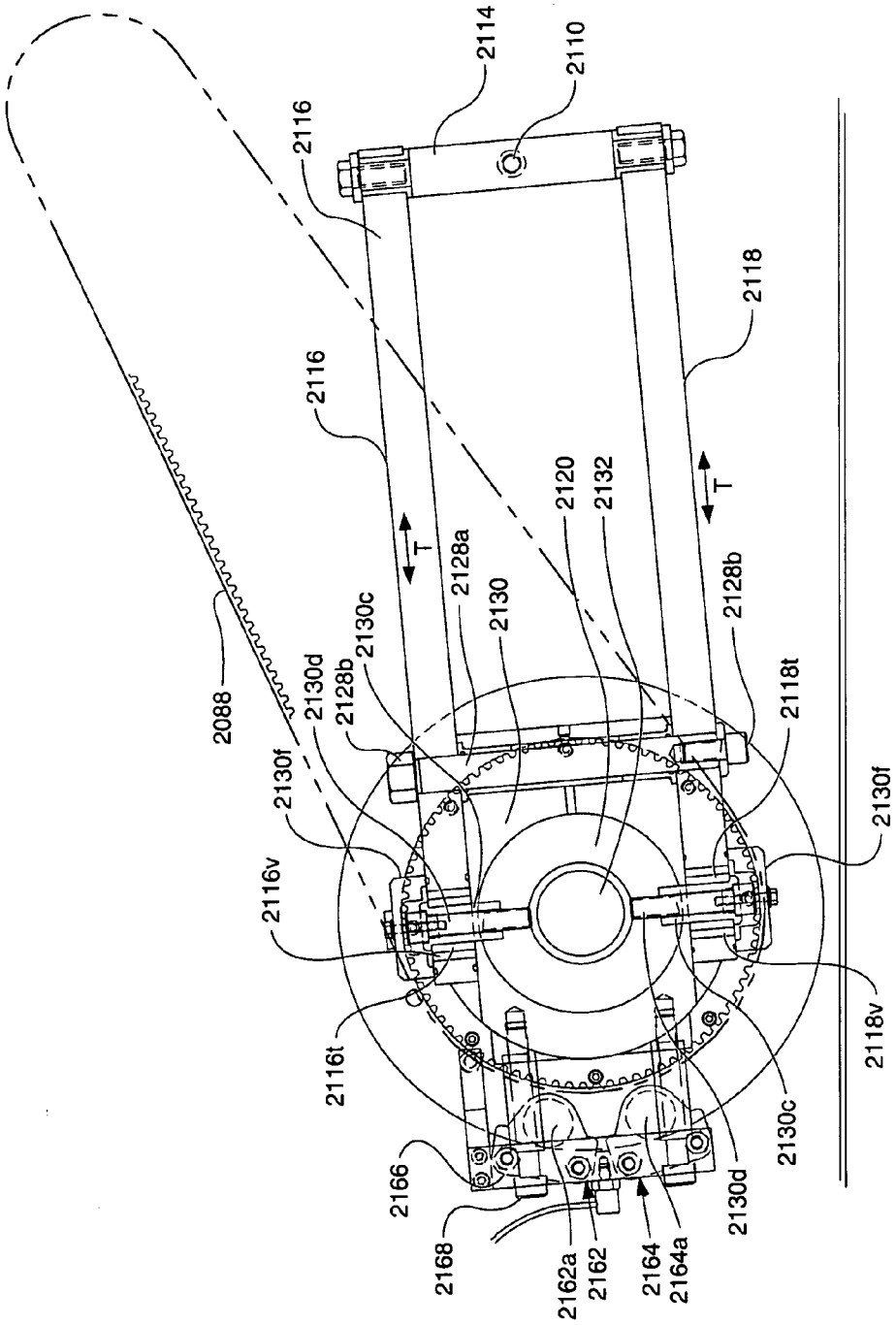
2114
2110
2116
2118
2116
2120
2132
T
T
2128a
2130
2128b
2130c
2130d
2128b
2118t
2088
2130f
2130f
2116v
2118v
2116t
2130c
2130d
2166
2168
2162a
2162
2164
2164a

FIG. 33A

FIG. 34

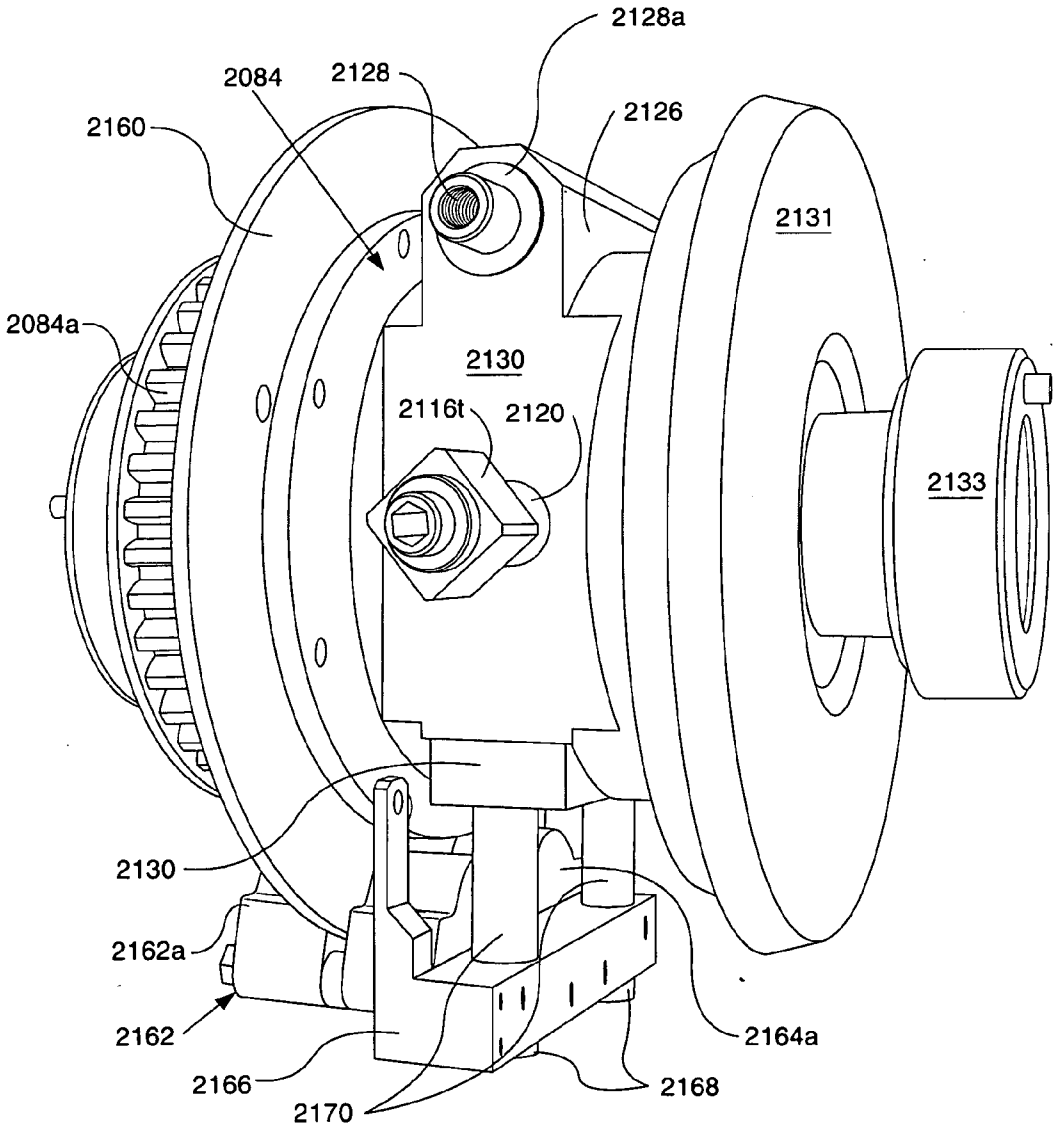
2128a
2084
2128
2126
2160
2131
2084a
2130
2116t
2120
2133
2130
2162a
2162
2164a
2166
2168
2170

FIG. 36

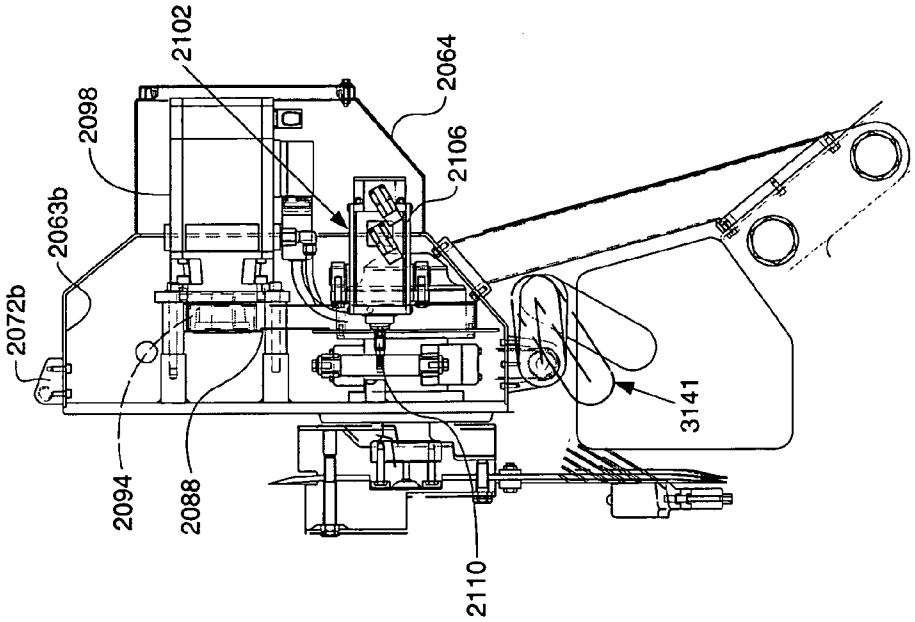
2072b
2063b
2098
2102
2064
2106
2094
2088
2110
3141

FIG. 35

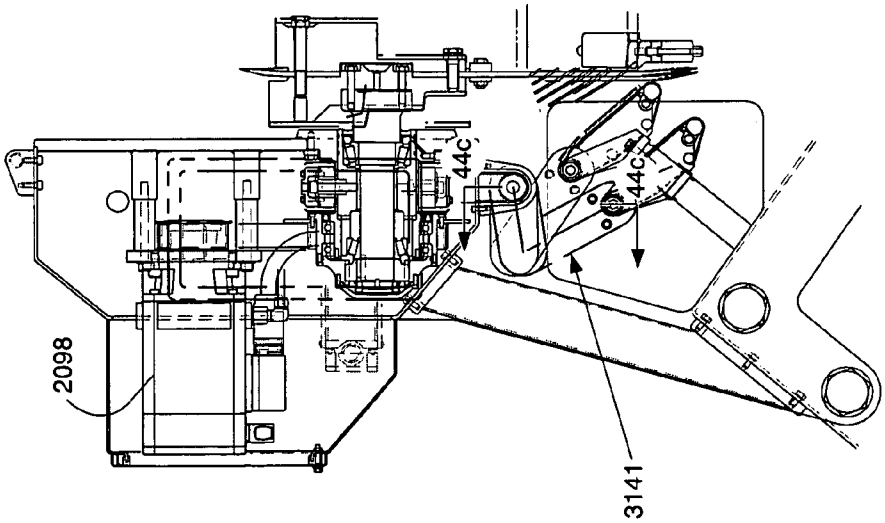
2098
44c
44c
3141

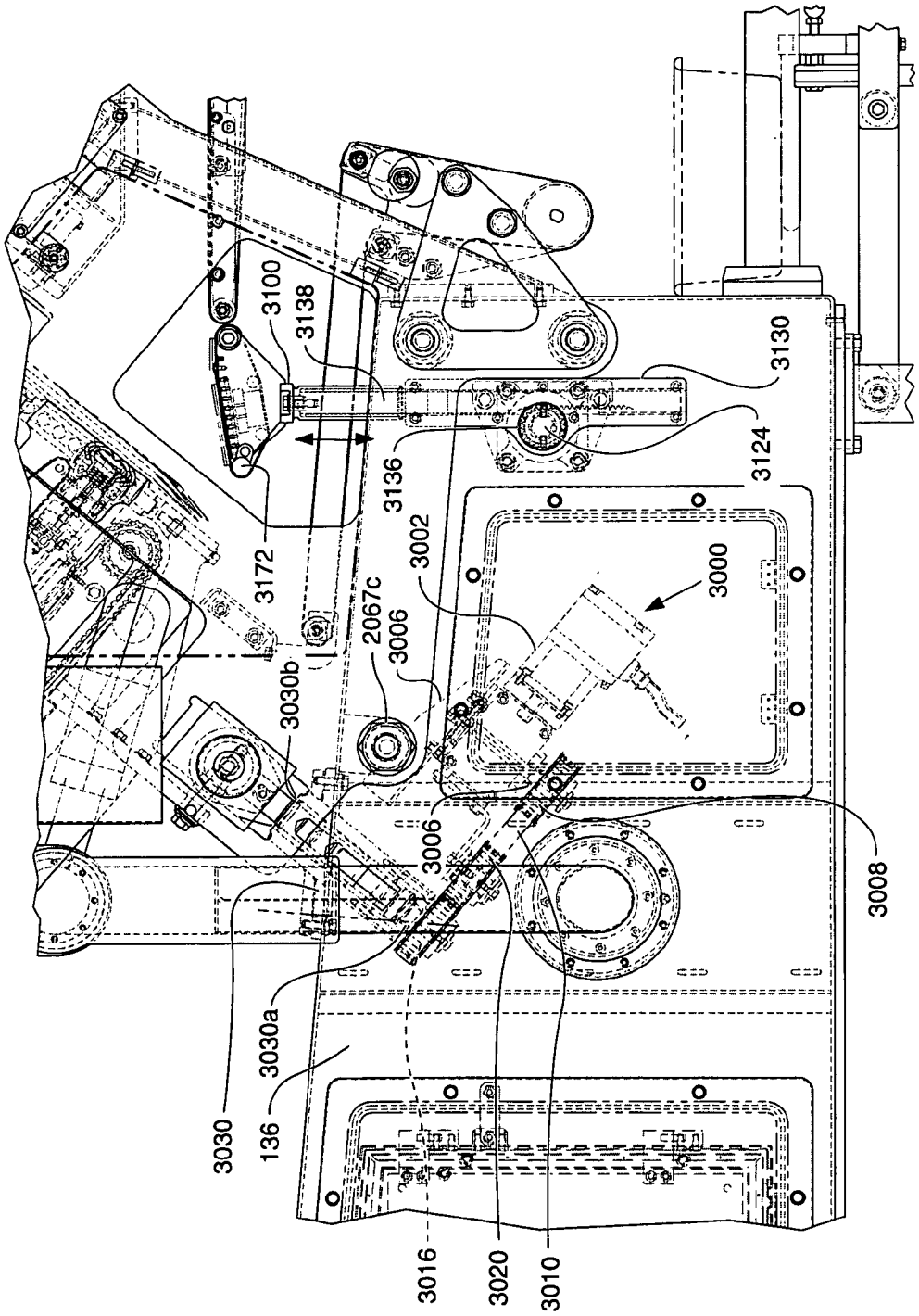
3100
3138
3130
3124
3136
3172
3002
3000
2067c
3006
3030b
3006
3008
3030a
3030
136
3016
3020
3010

FIG. 37

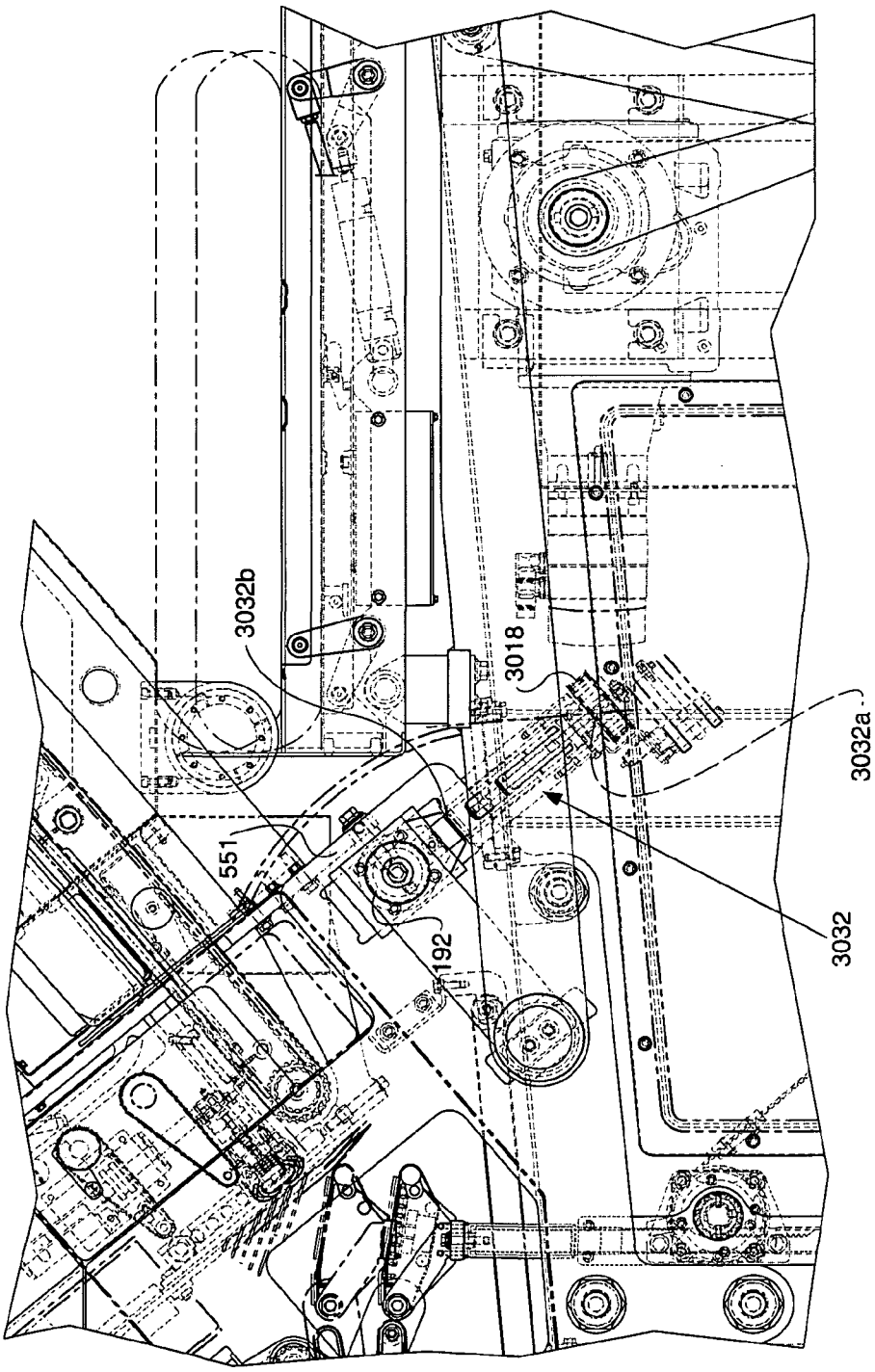

FIG. 38

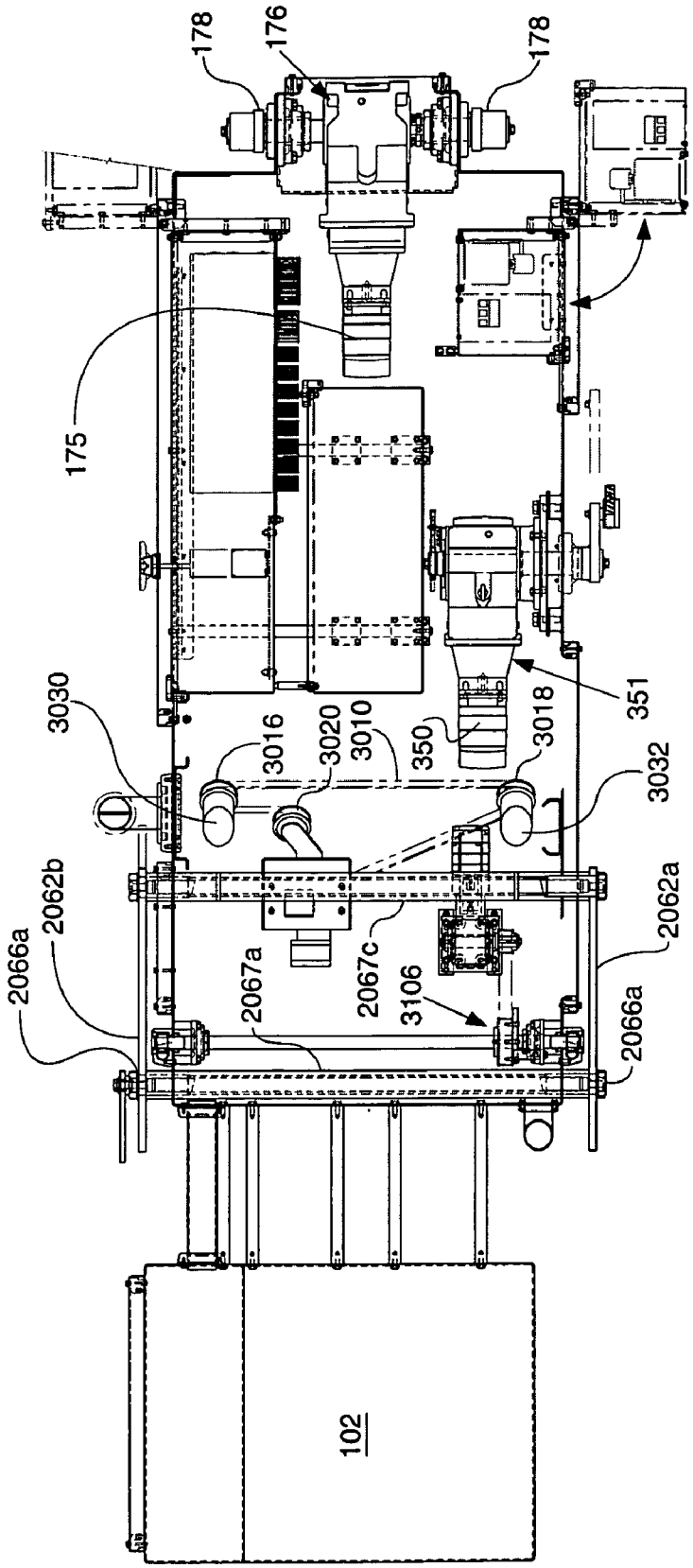
178
176
178
175
3030
3016
3020
3010
350
3018
351
3032
2062b
2066a
2067a
2067c
3106
2062a
2066a
102

FIG. 39

FIG. 40

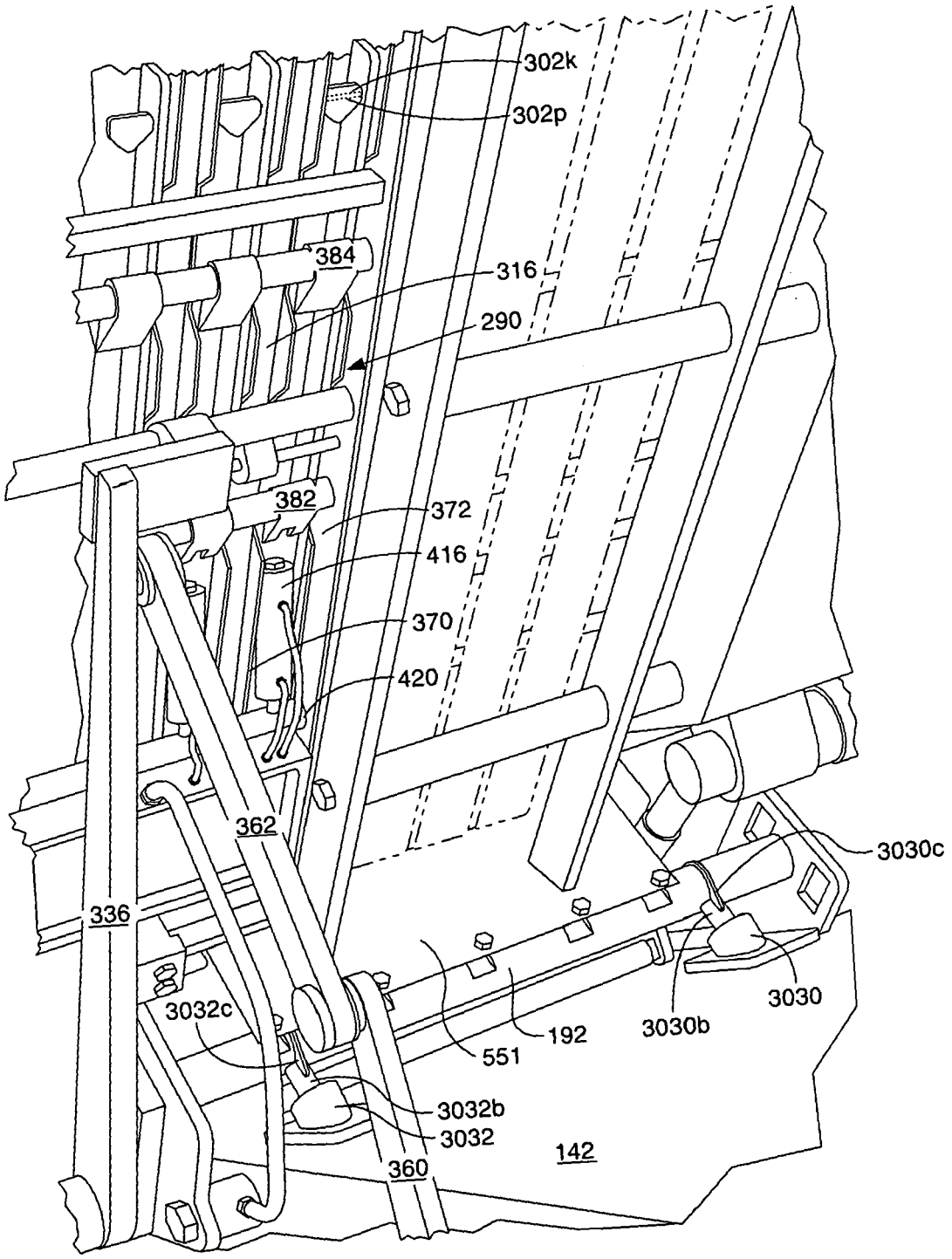
302k
302p
384
316
290
382
372
416
370
420
362
336
3030c
3032c
192
3030b
3030
551
3032b
3032
142
360

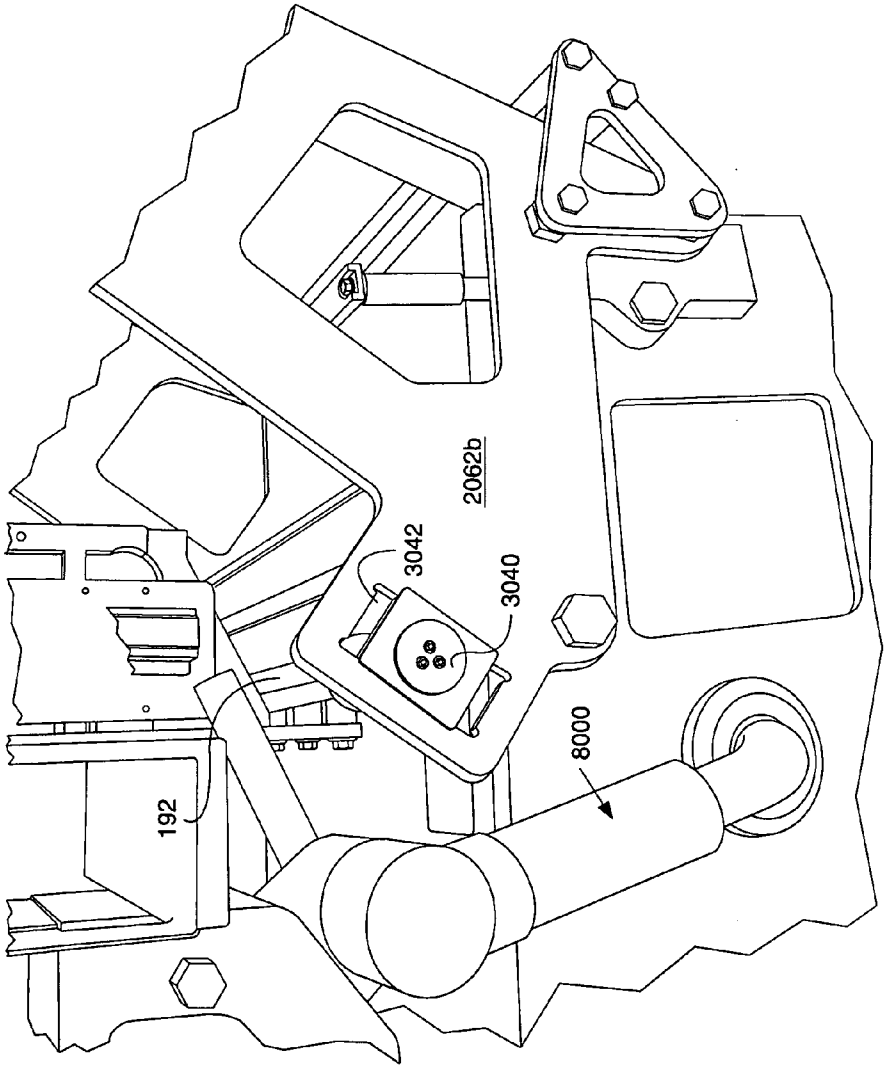

FIG. 41

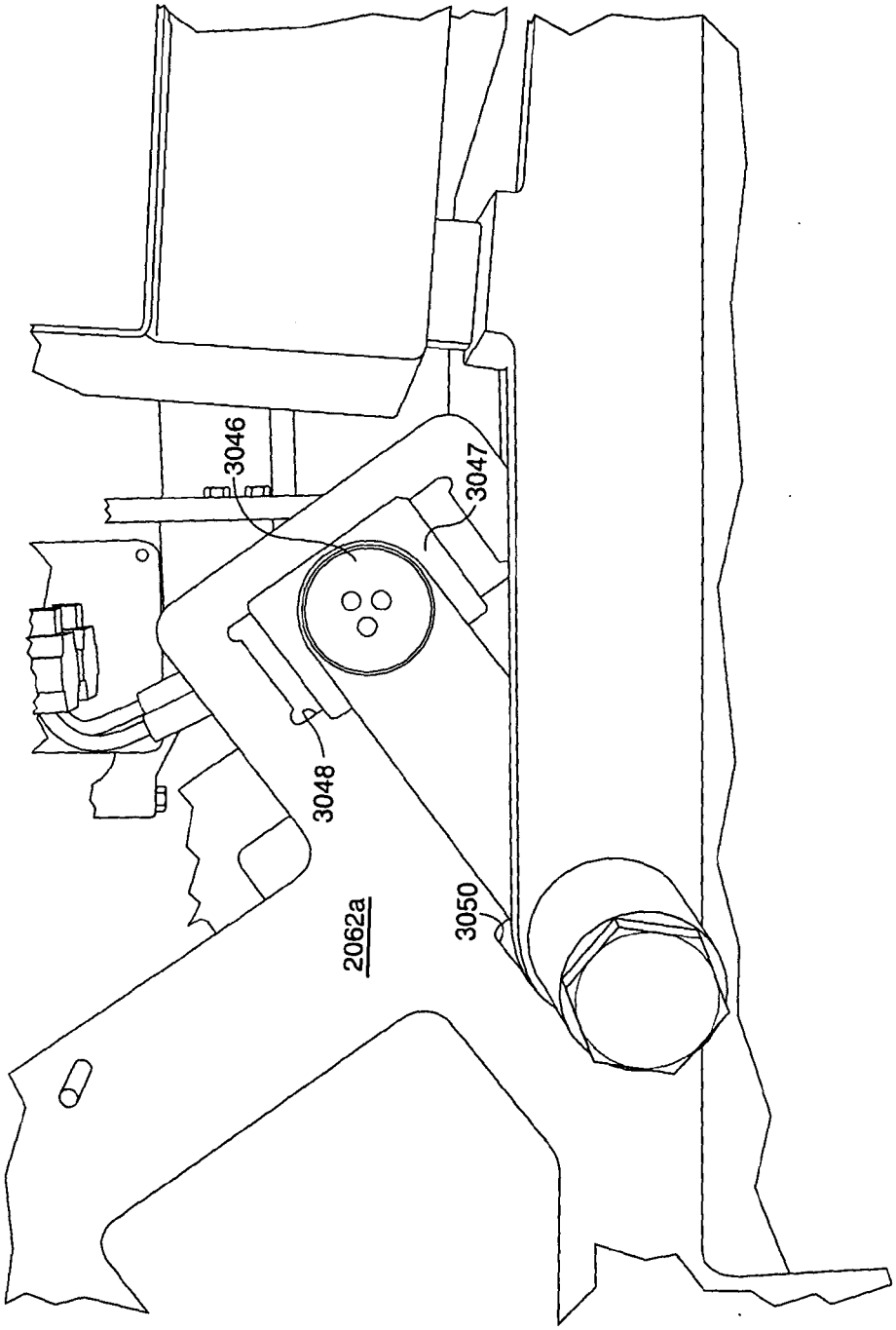

FIG. 42

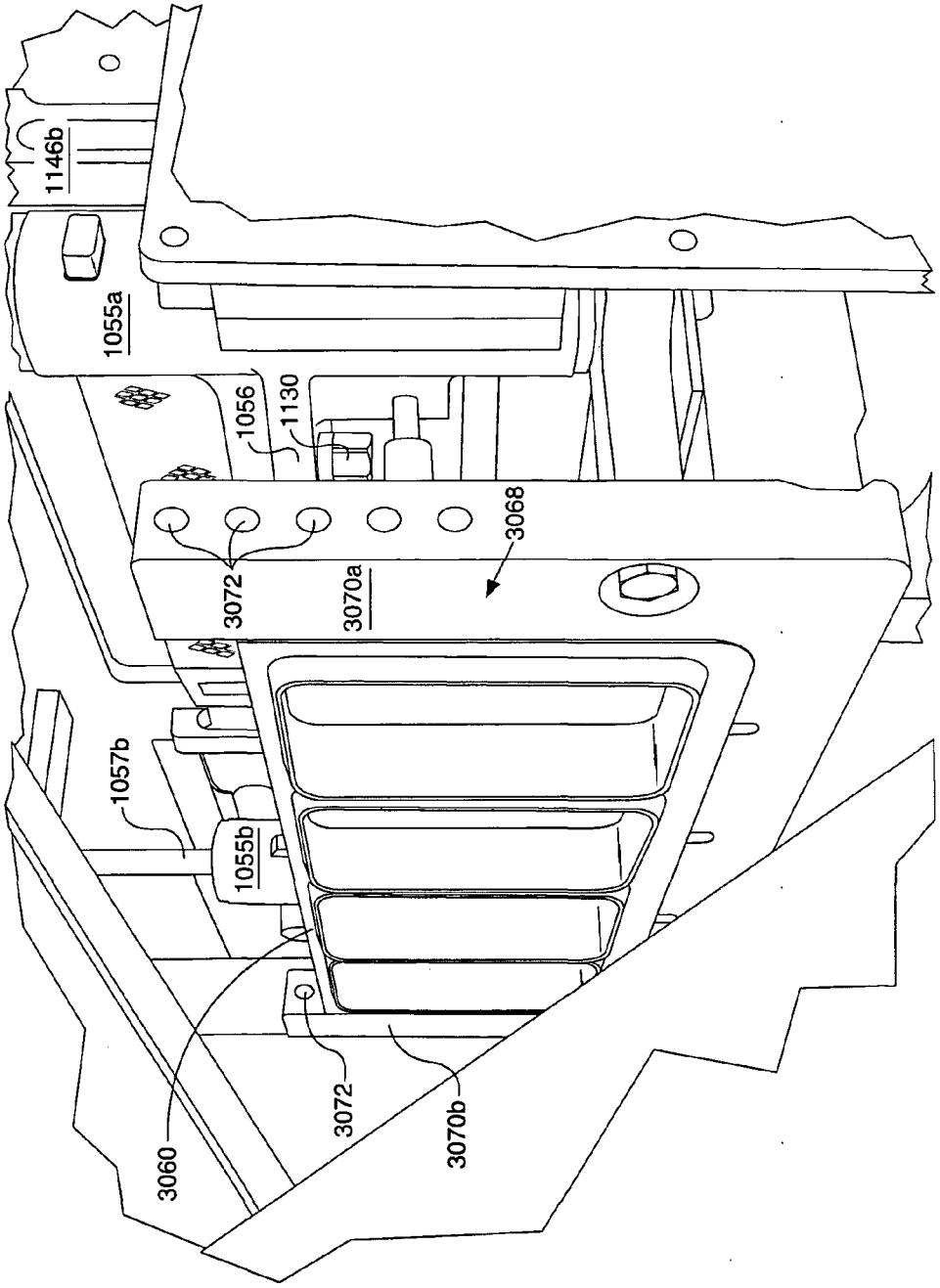
1146b
1055a
1056
1130
3068
3072
3070a
1057b
1055b
3060
3072
3070b

FIG. 43

FIG. 44

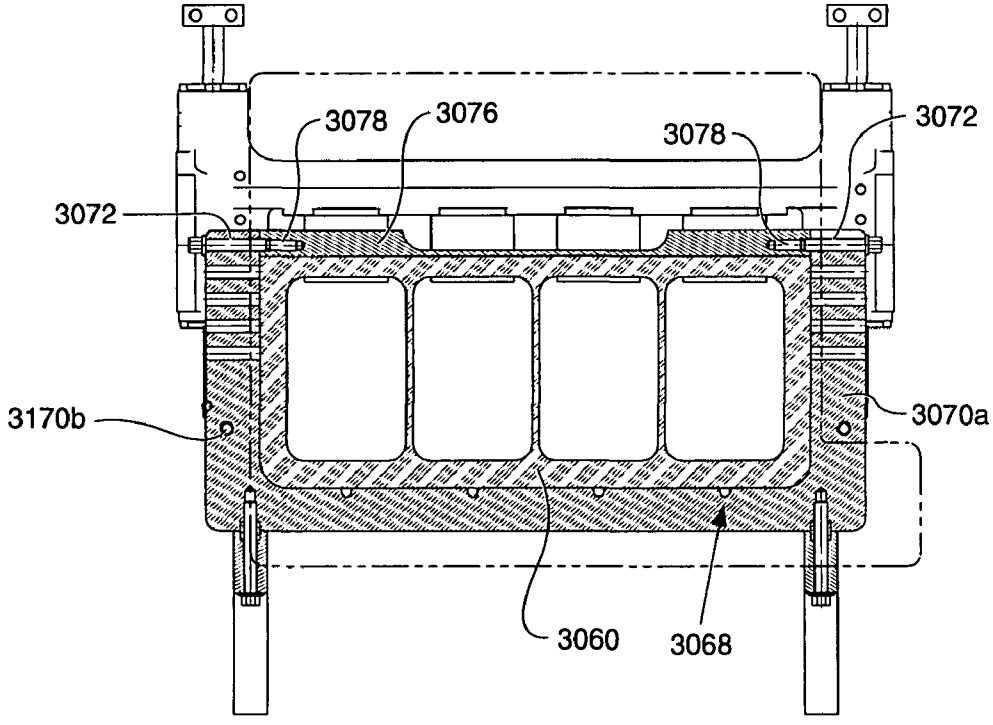

FIG. 44c

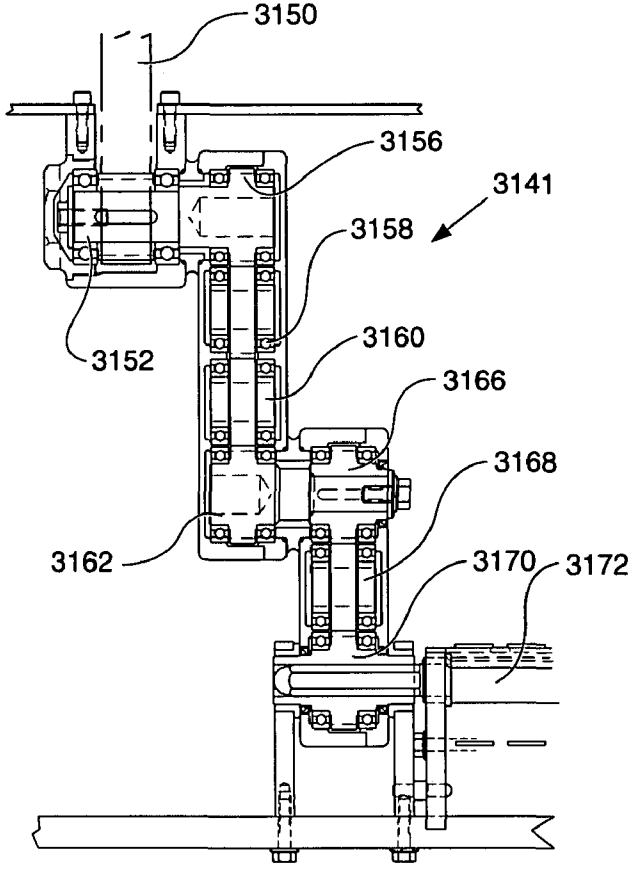

FIG. 44B

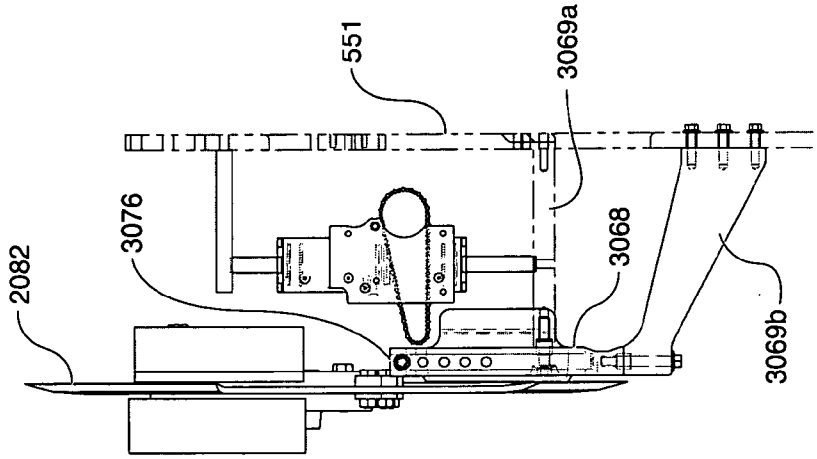

FIG. 44A

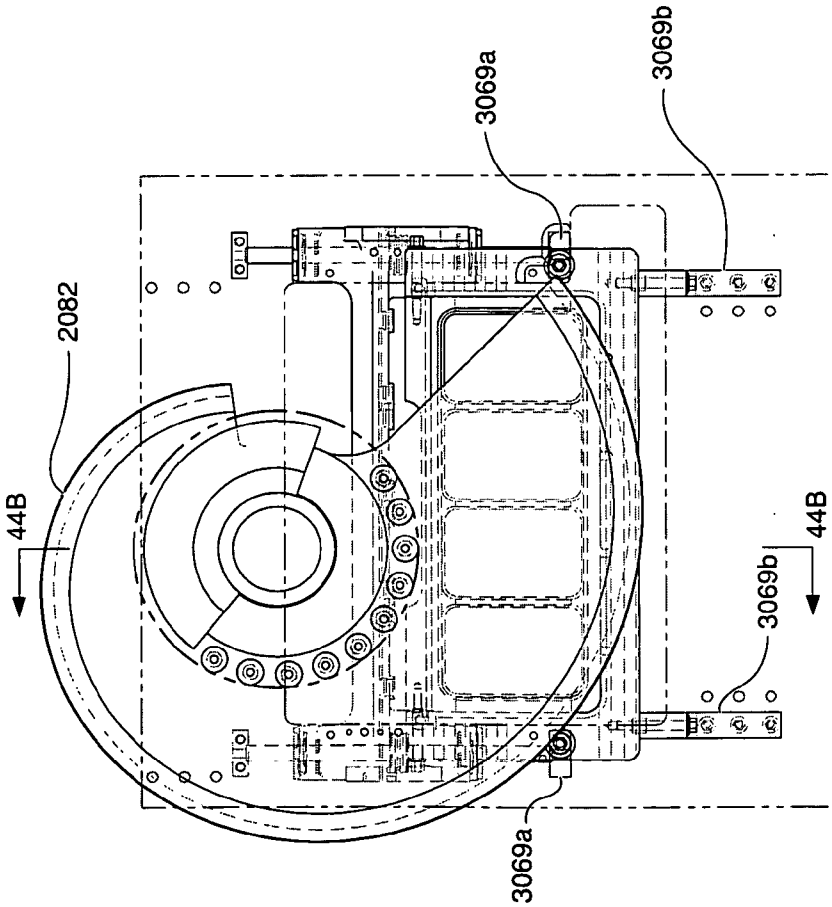

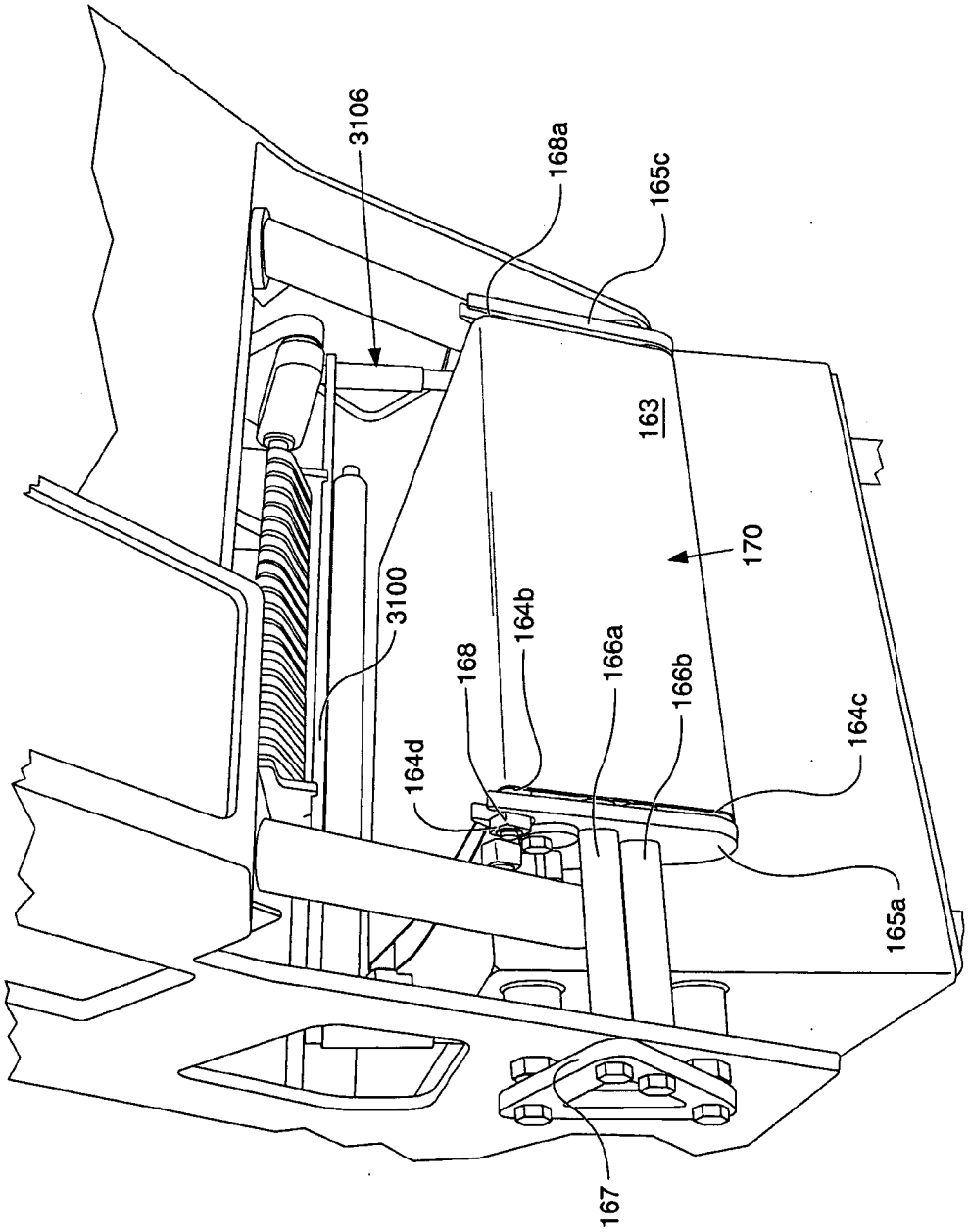
3106
168a
165c
163
170
3100
164b
168
166a
166b
164c
164d
165a
167

FIG. 45

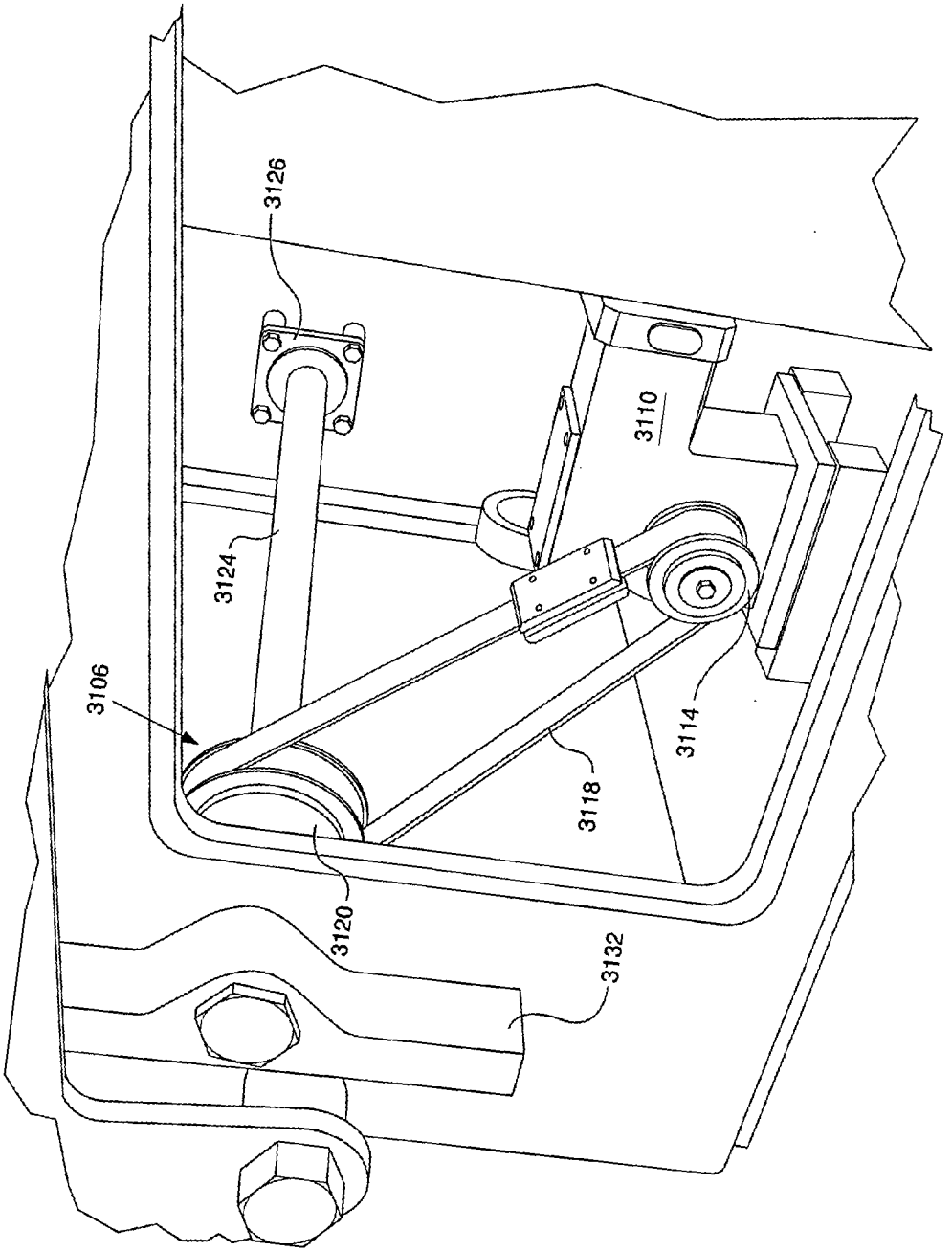

FIG. 46

FIG. 46A

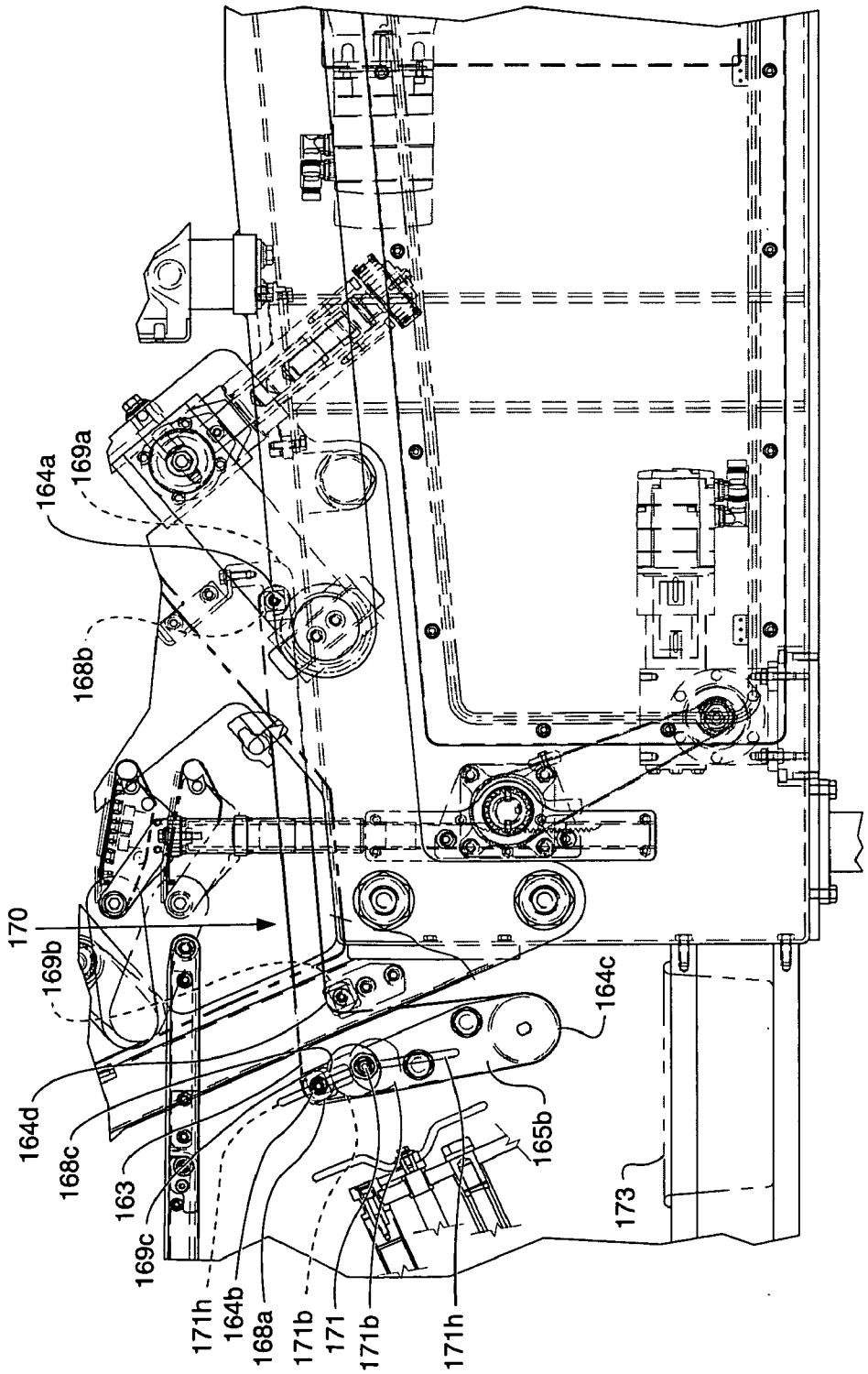
164a
169a
168b
170
169b
164d
168c
163
169c
171h
164b
168a
171b
171
171b
171h
165b
164c
173

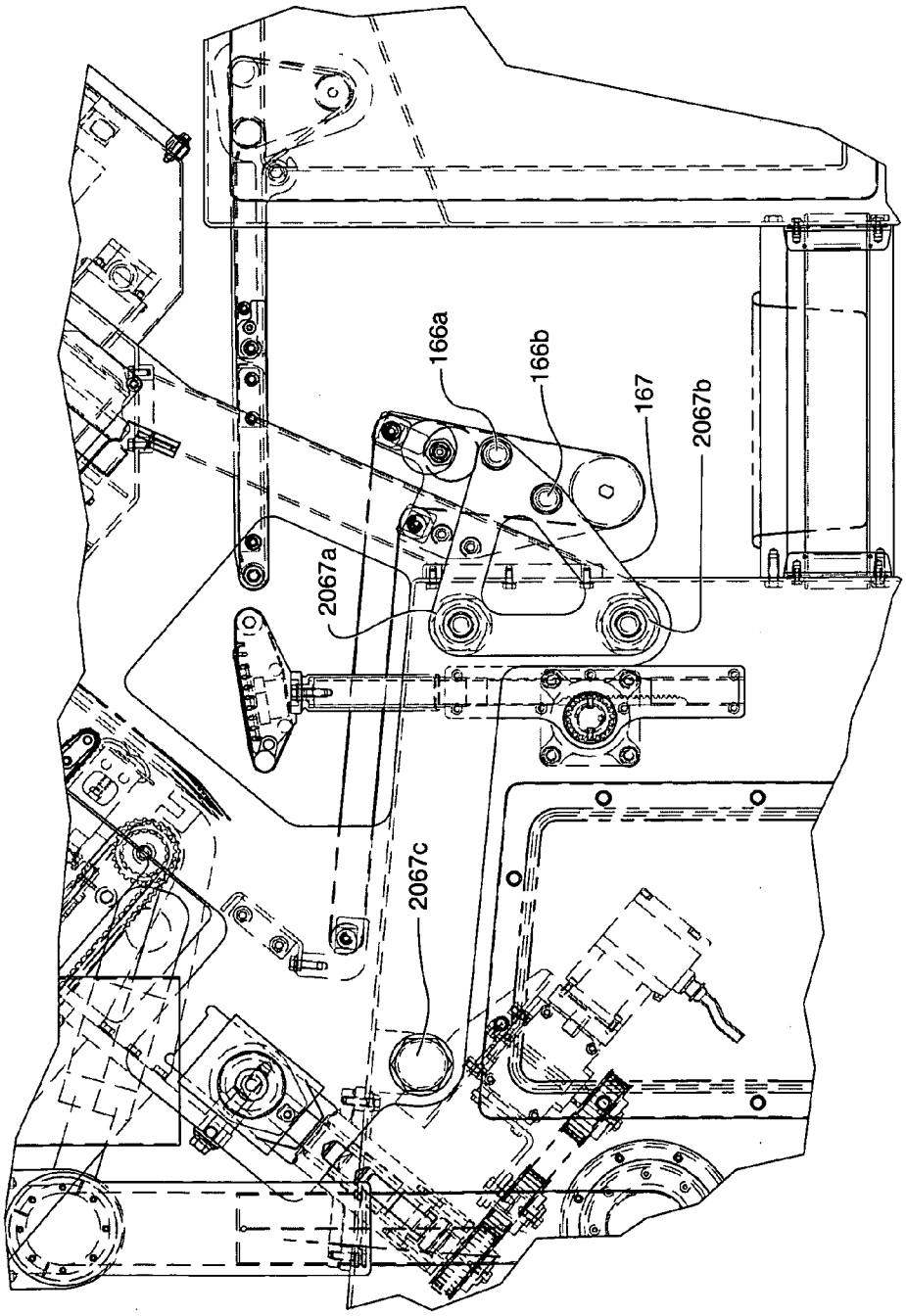

FIG. 47

FIG. 48

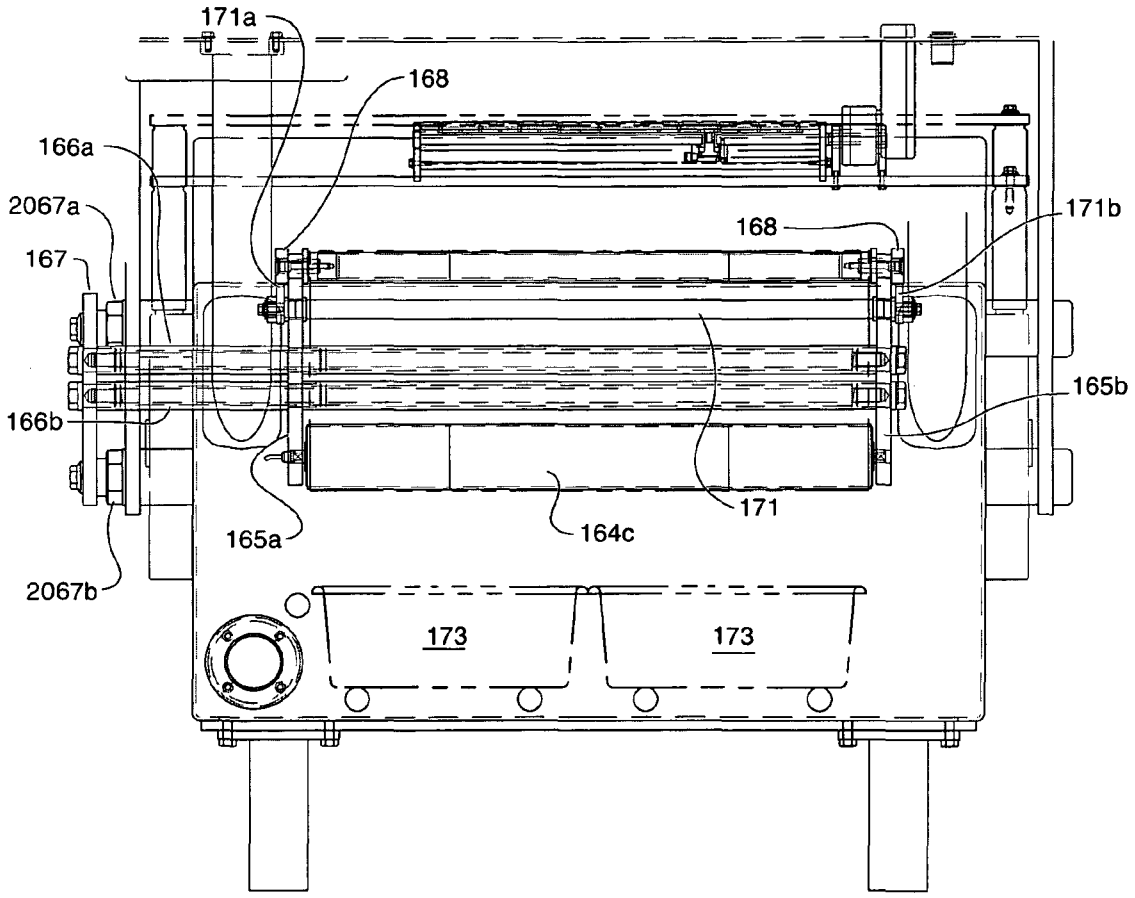
171a
168
166a
2067a
167
168
171b
165b
166b
165a
164c
171
2067b
173
173

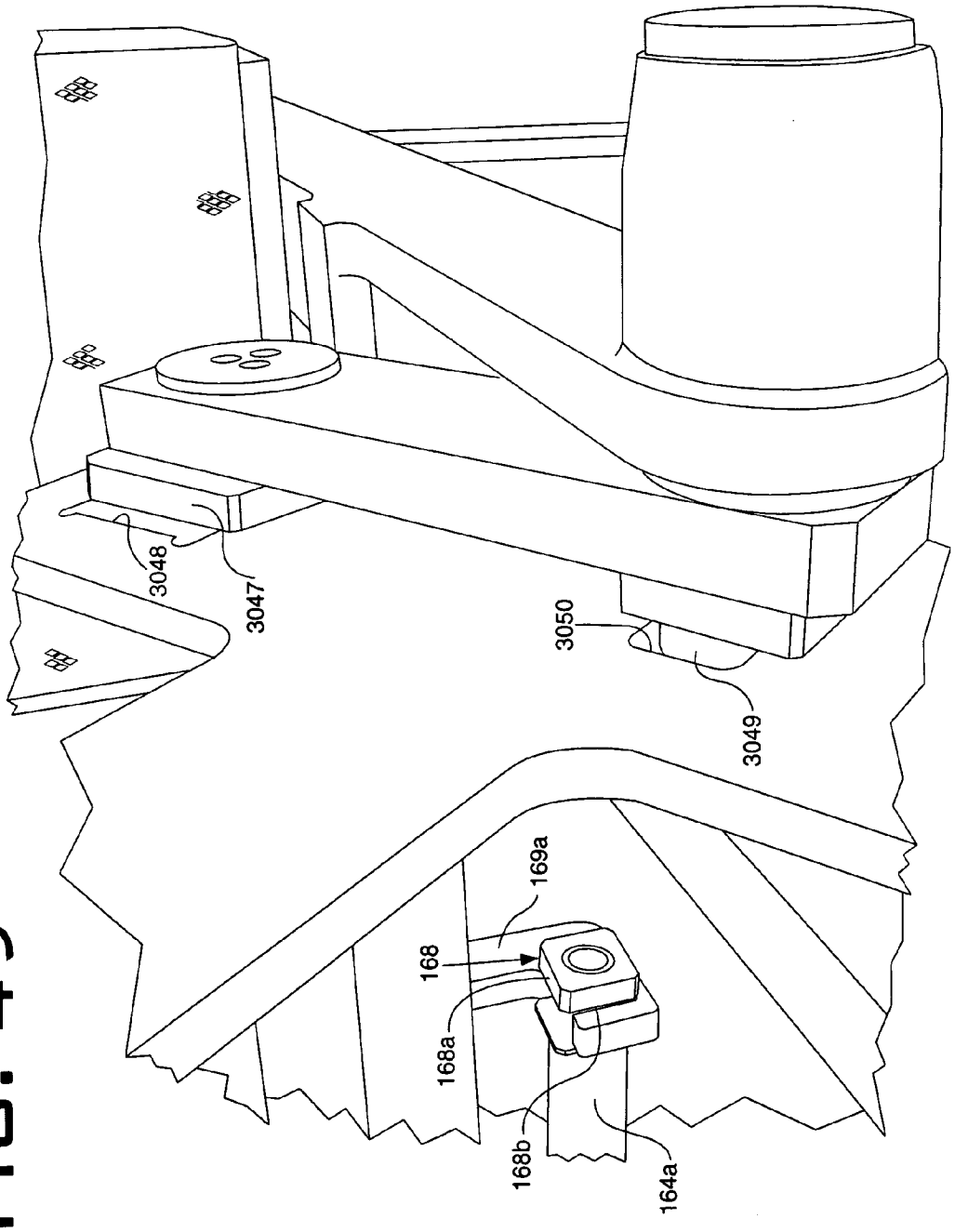

FIG. 49

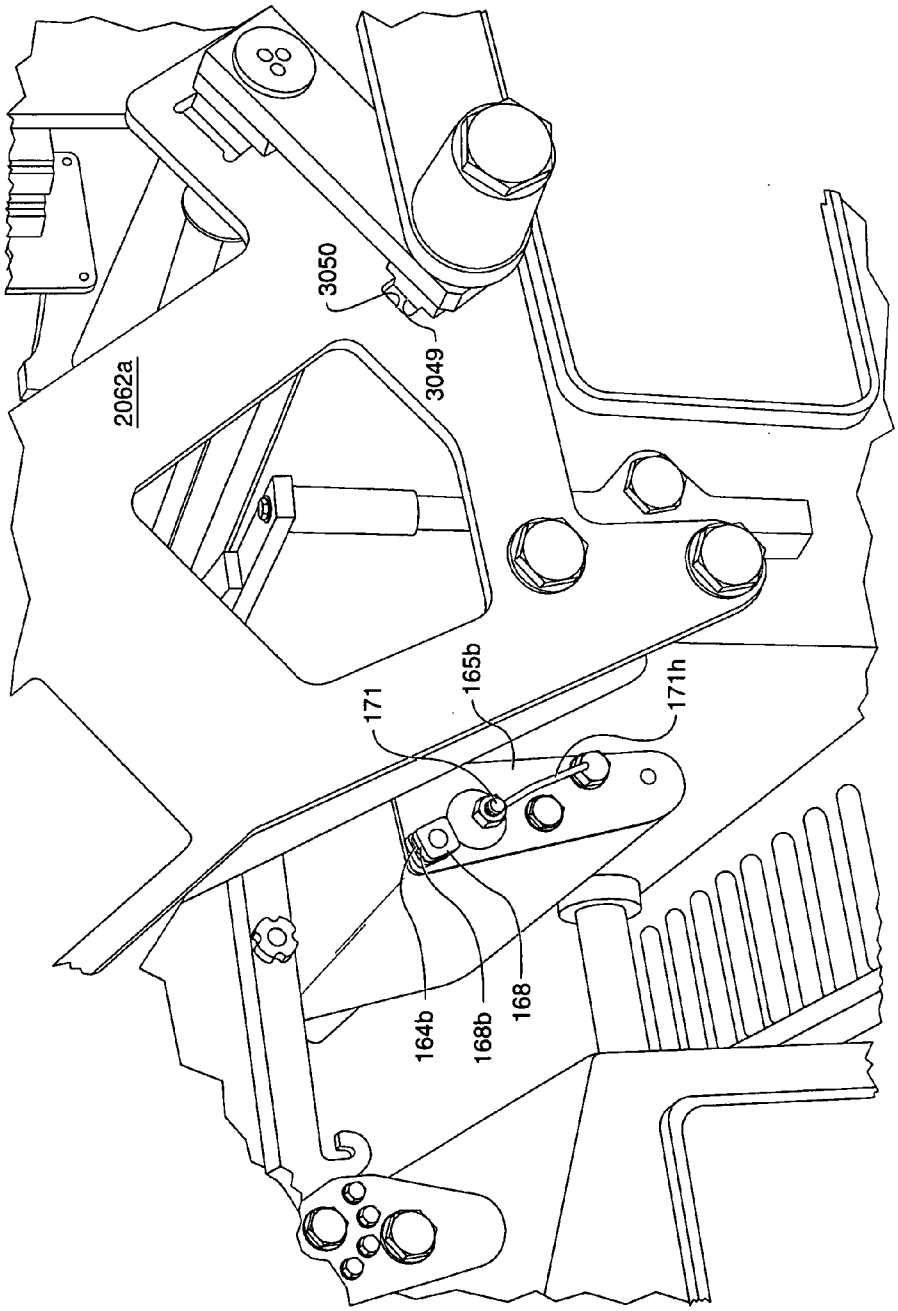

FIG. 50

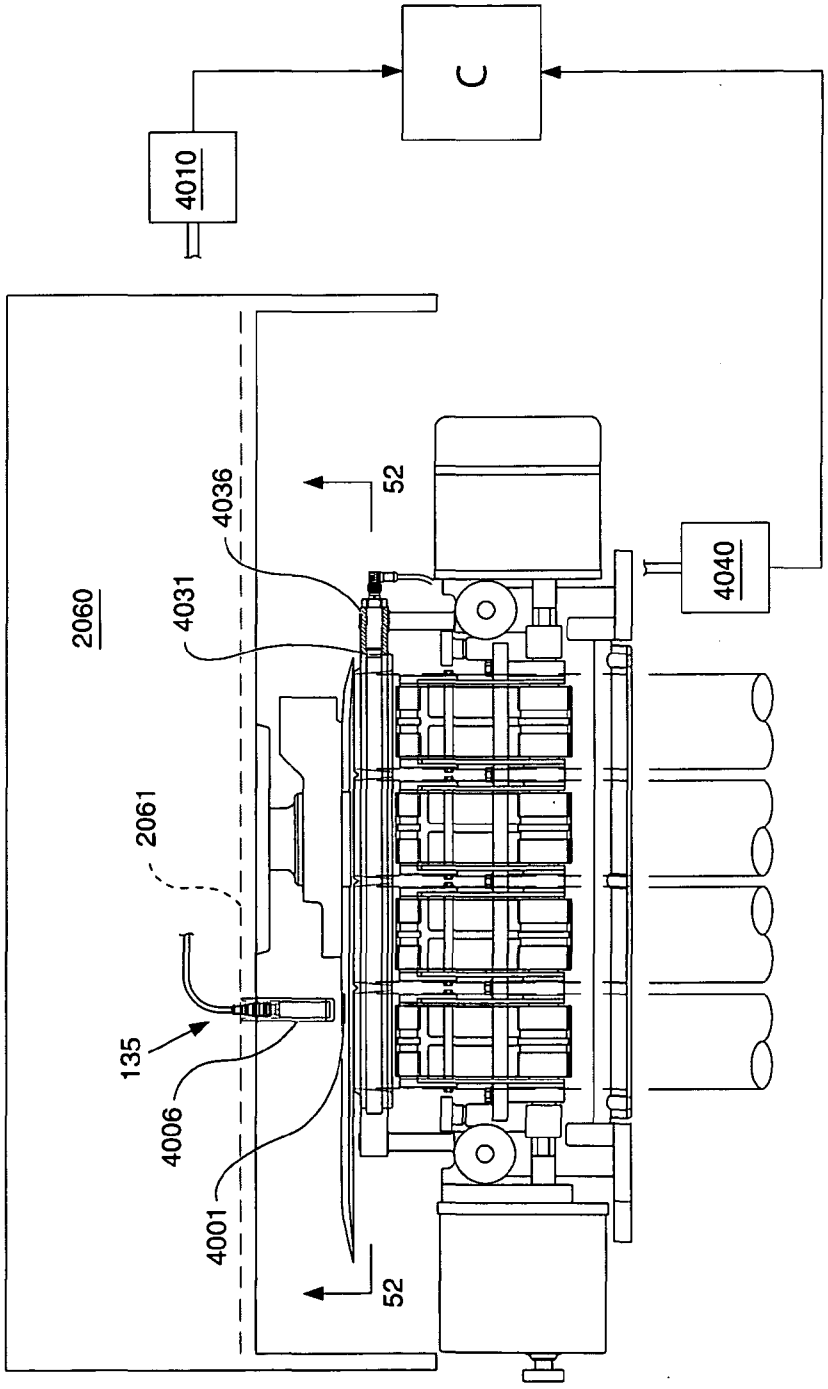

FIG. 51

FIG. 52

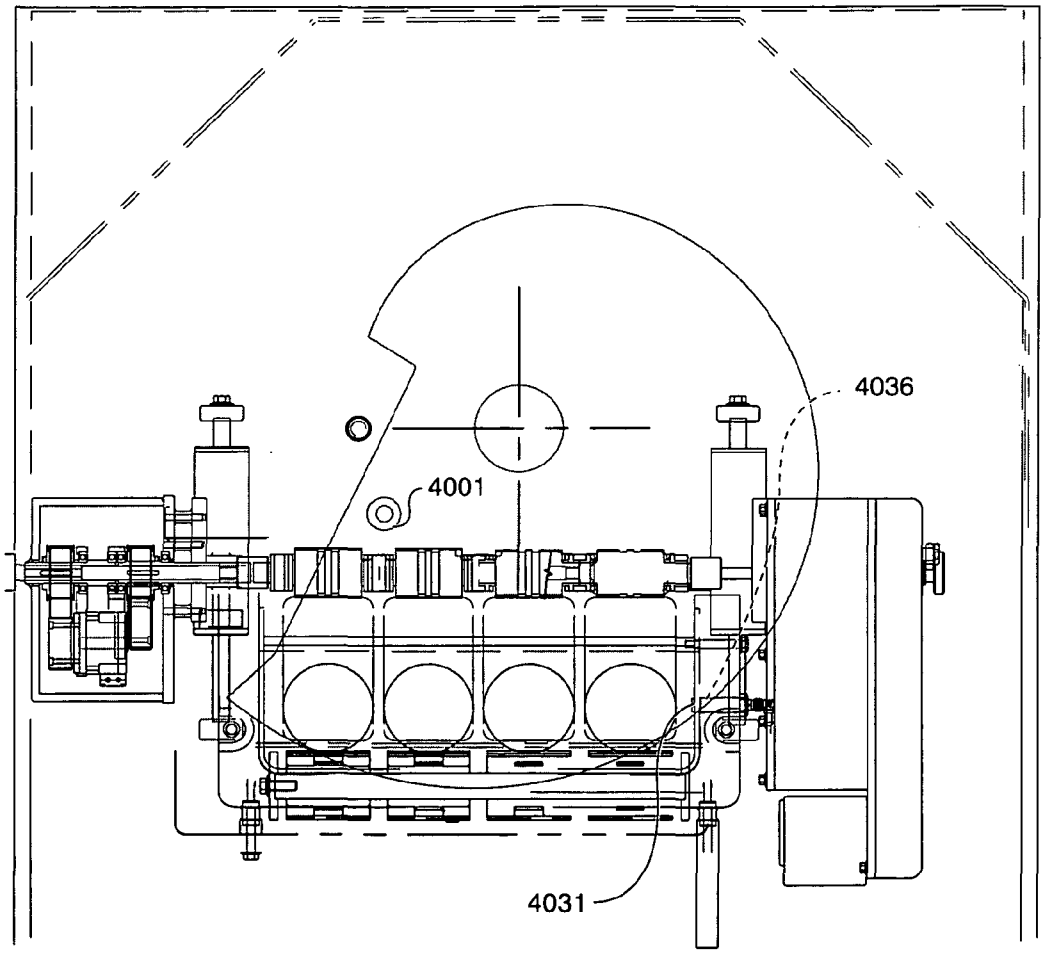

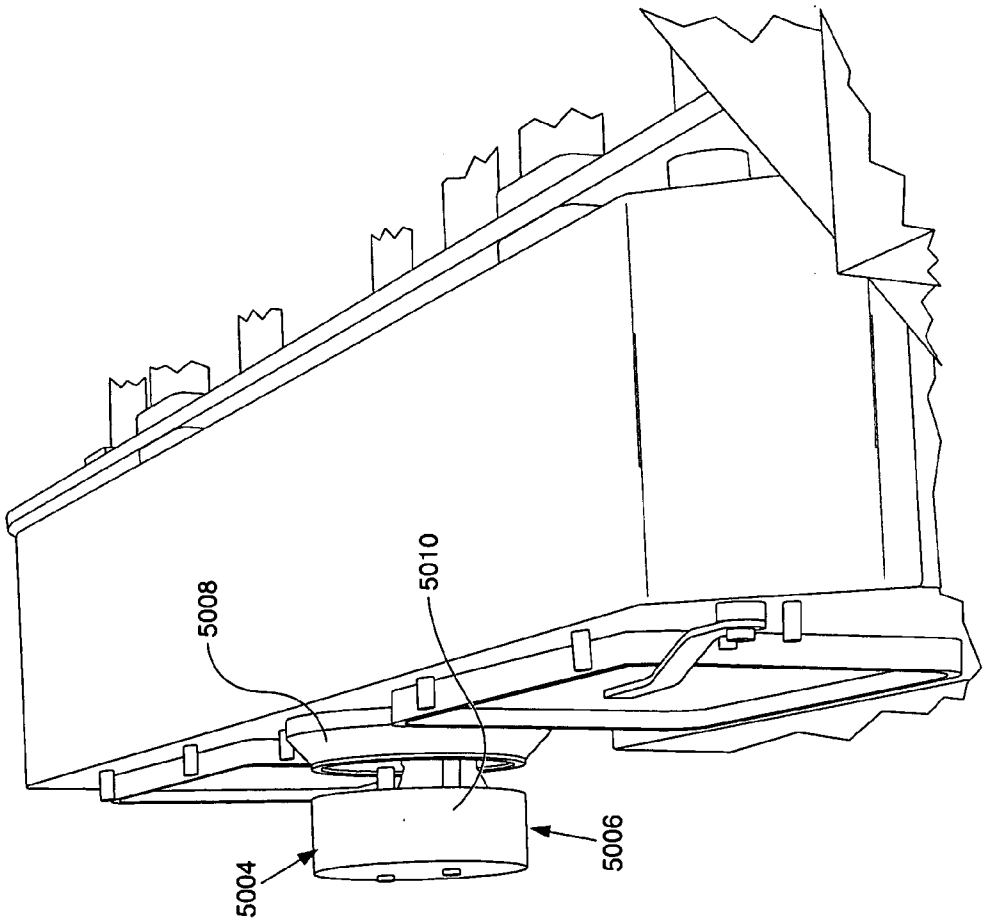

FIG. 53

FIG. 54

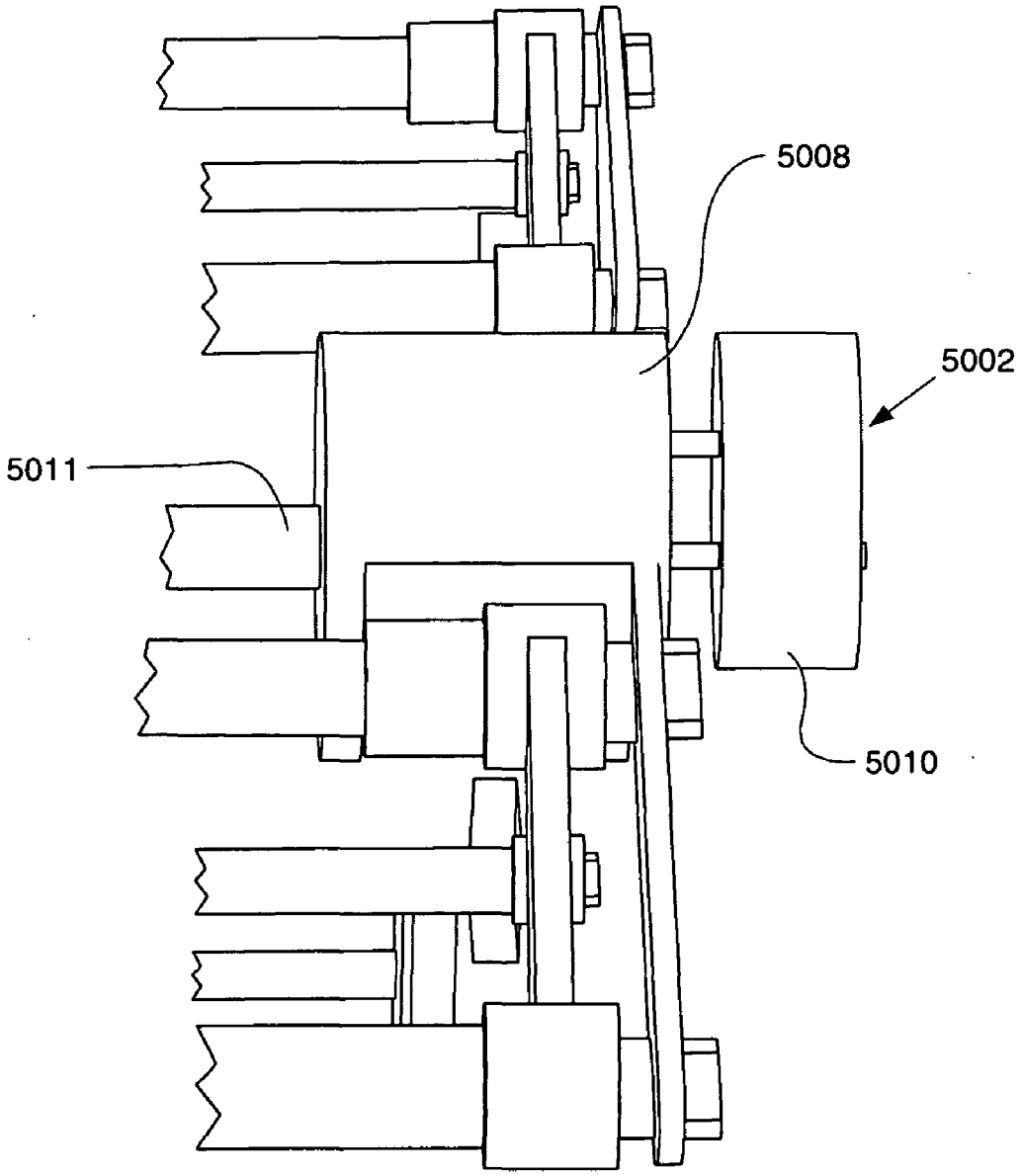

FIG. 55

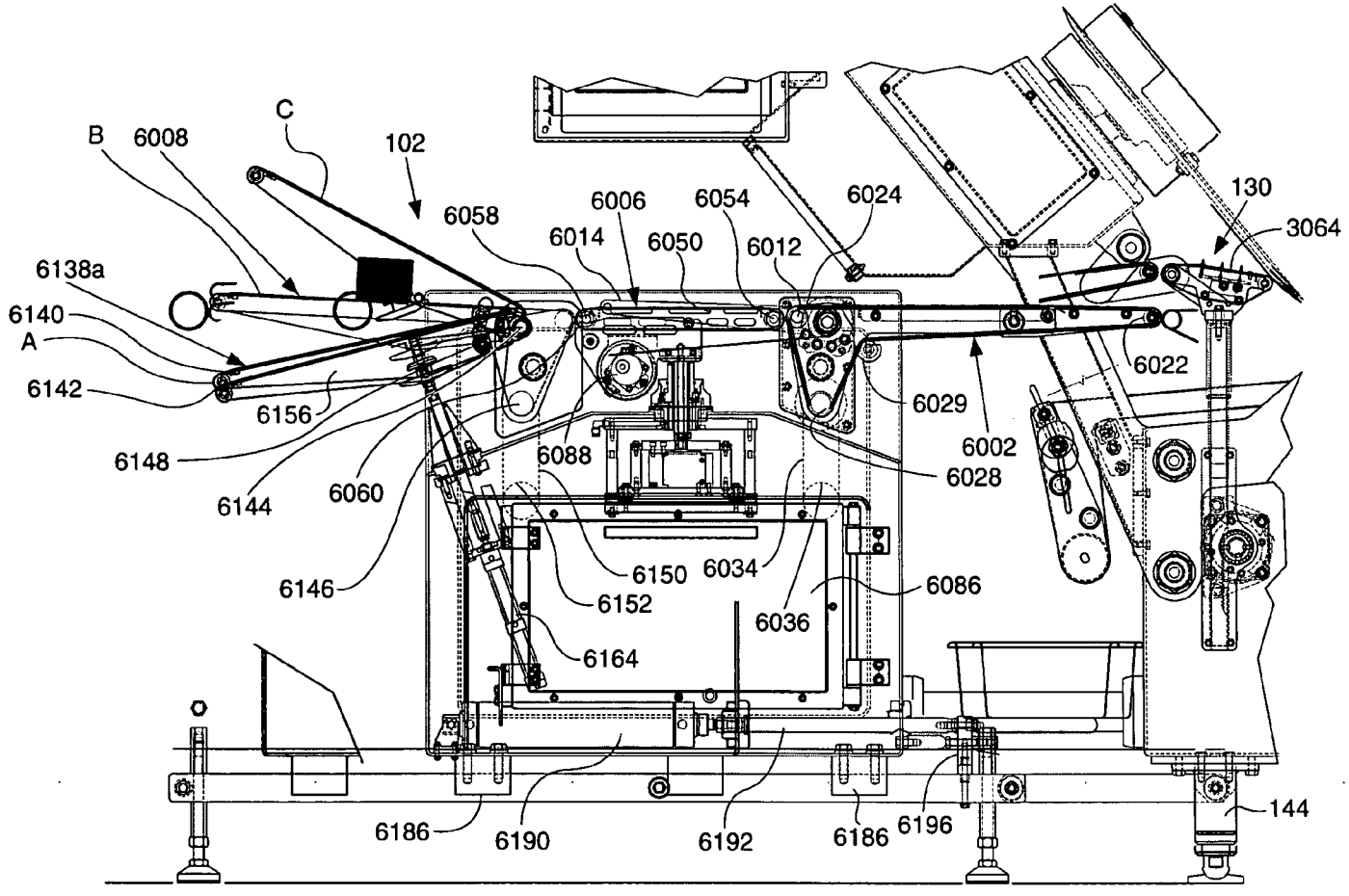
B
6008
C
102
6058
6006
6054
6024
6014
6050
6012
130
3064
6138a
6140
A
6142
6156
6148
6144
6060
6146
6088
6150
6152
6164
6034
6036
6086
6029
6028
6002
6022
144
6186
6190
6192
6186
6196

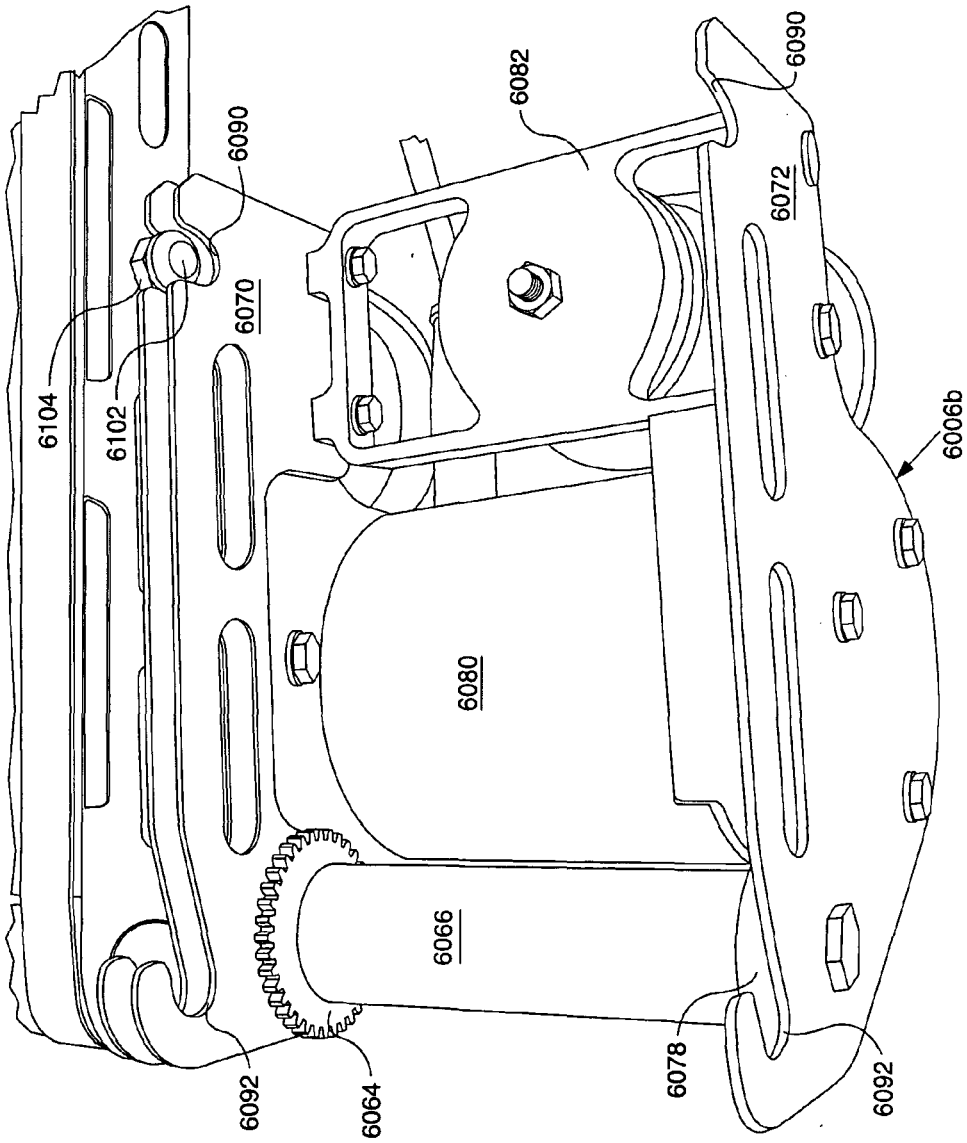
6104
6102
6090
6070
6082
6090
6072
6006b
6080
6066
6092
6064
6078
6092

FIG. 56

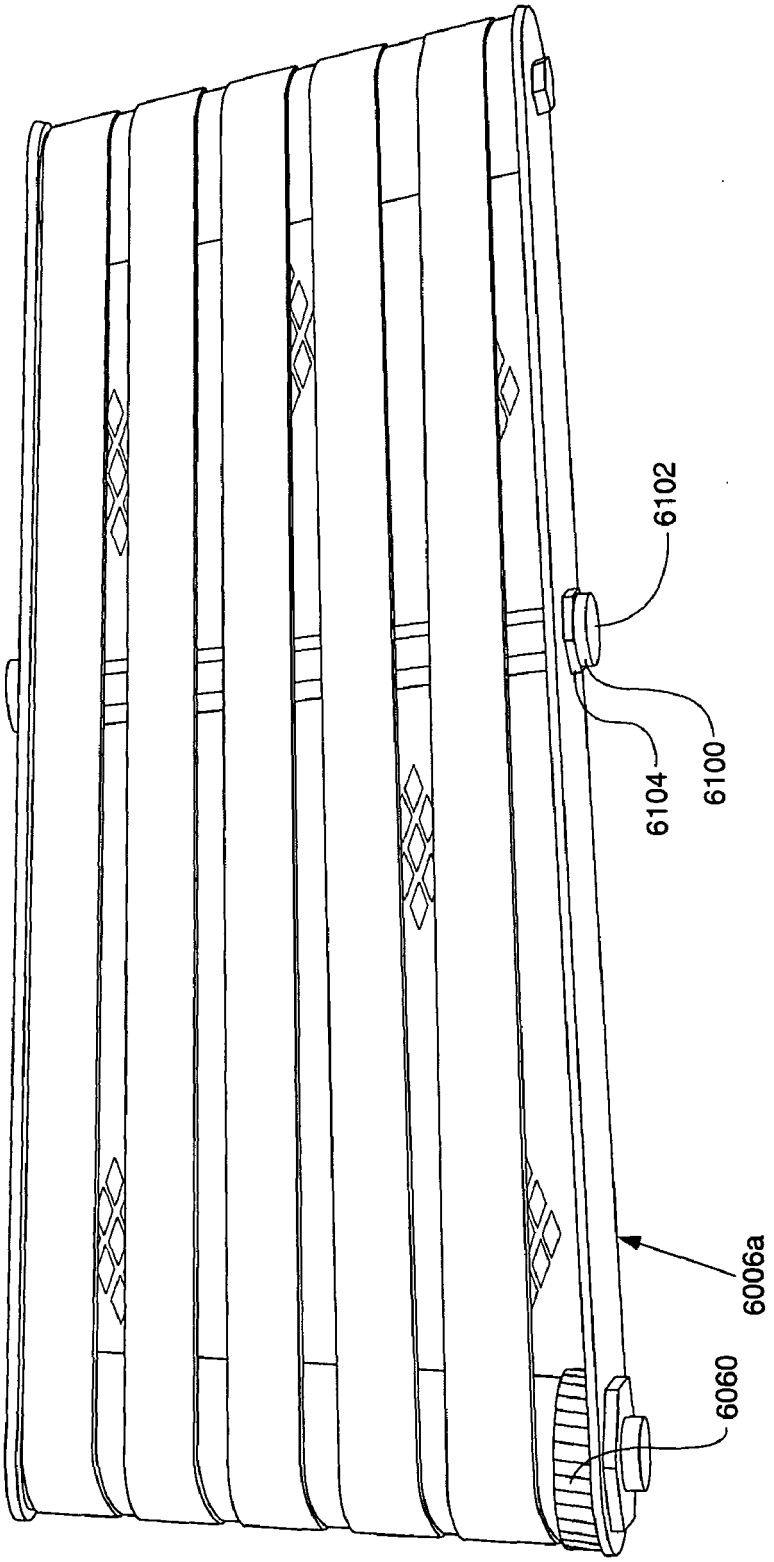

FIG. 57

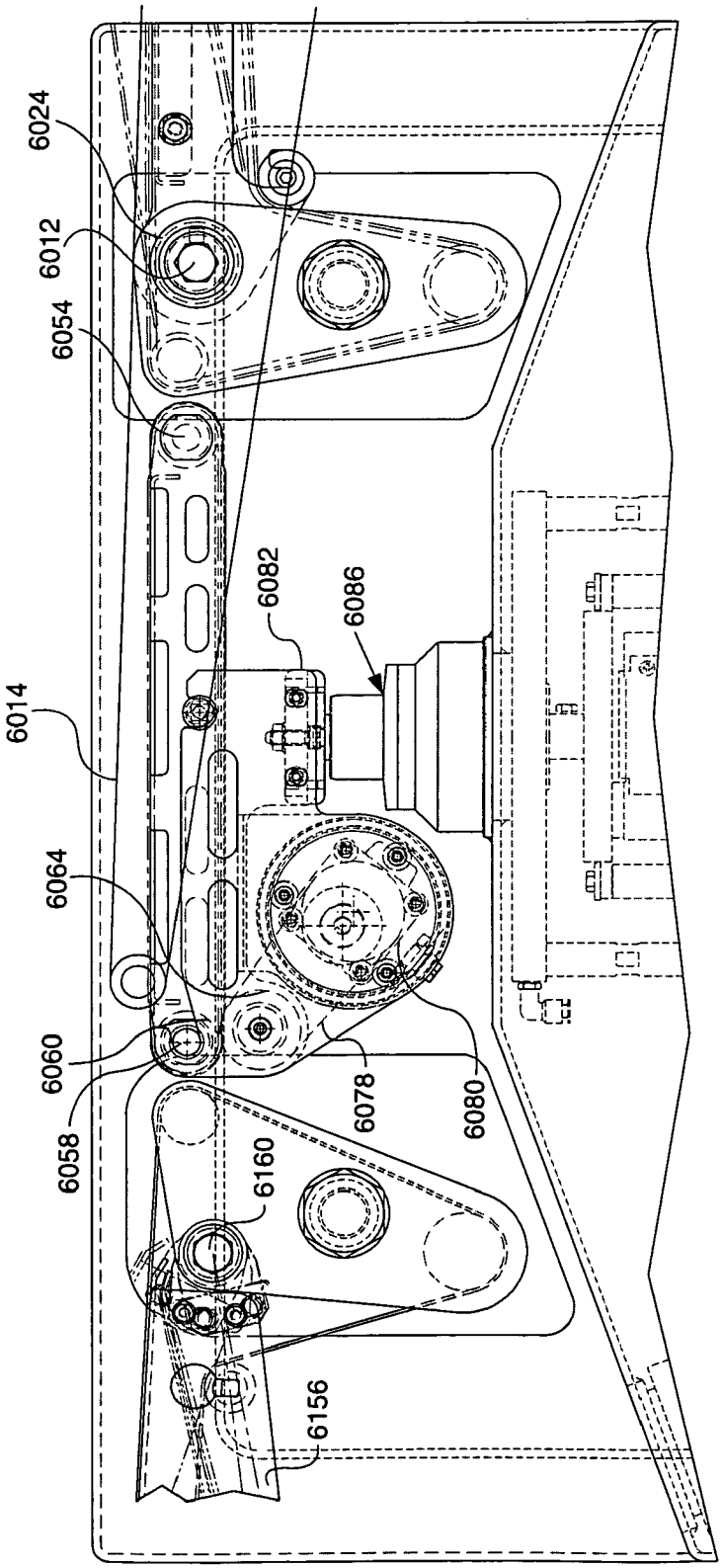
6024
6012
6054
6014
6064
6060
6058
6082
6086
6078
6080
6160
6156

FIG. 58

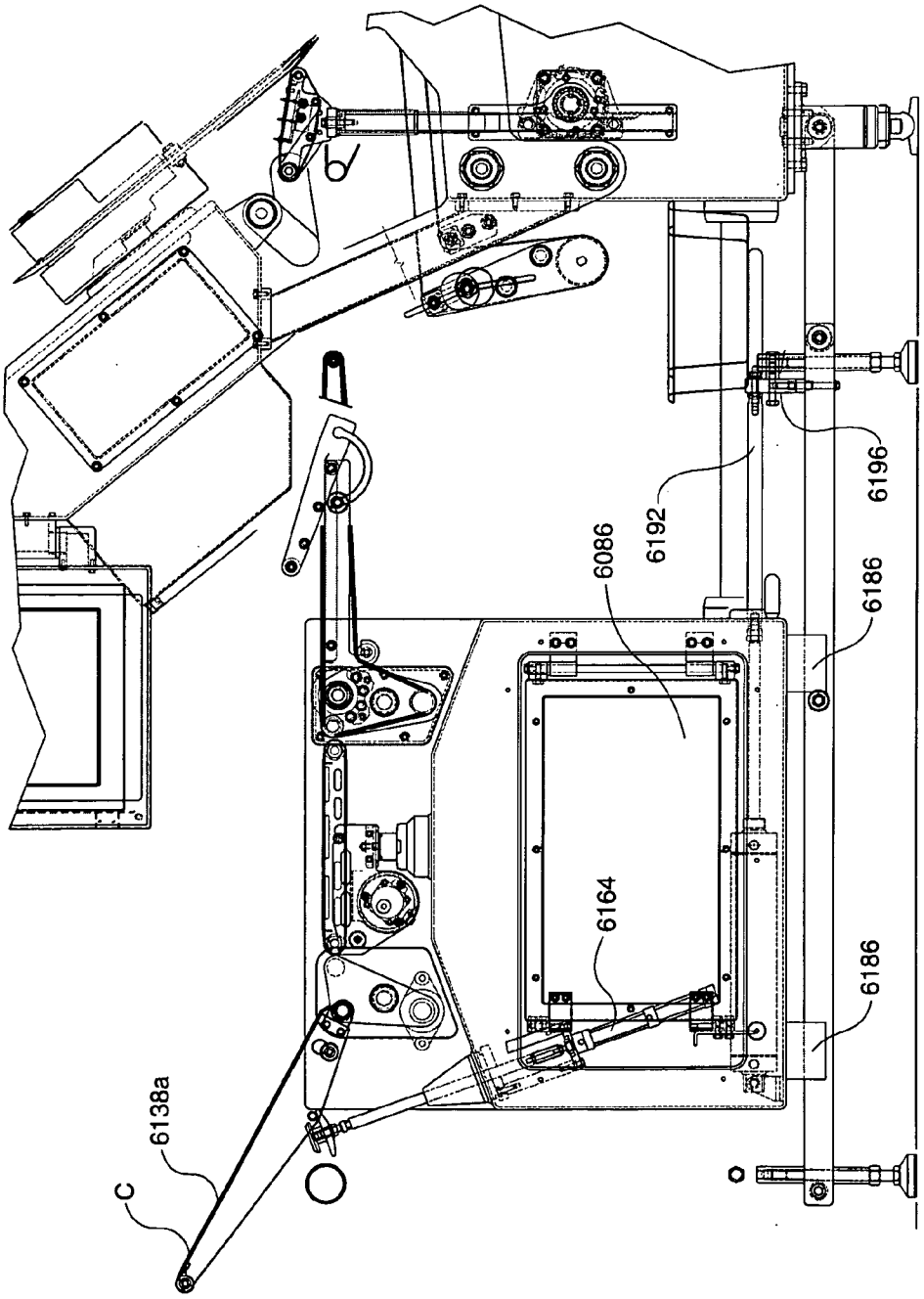

FIG. 59

FIG. 60

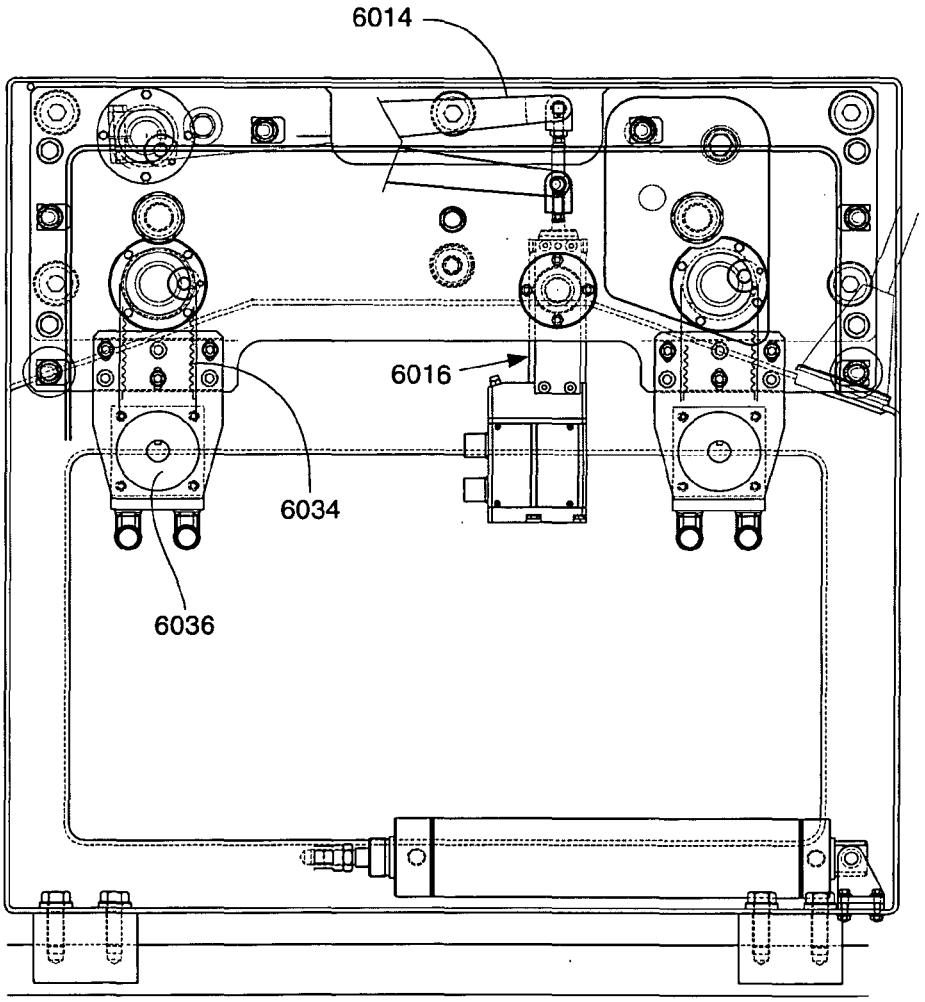

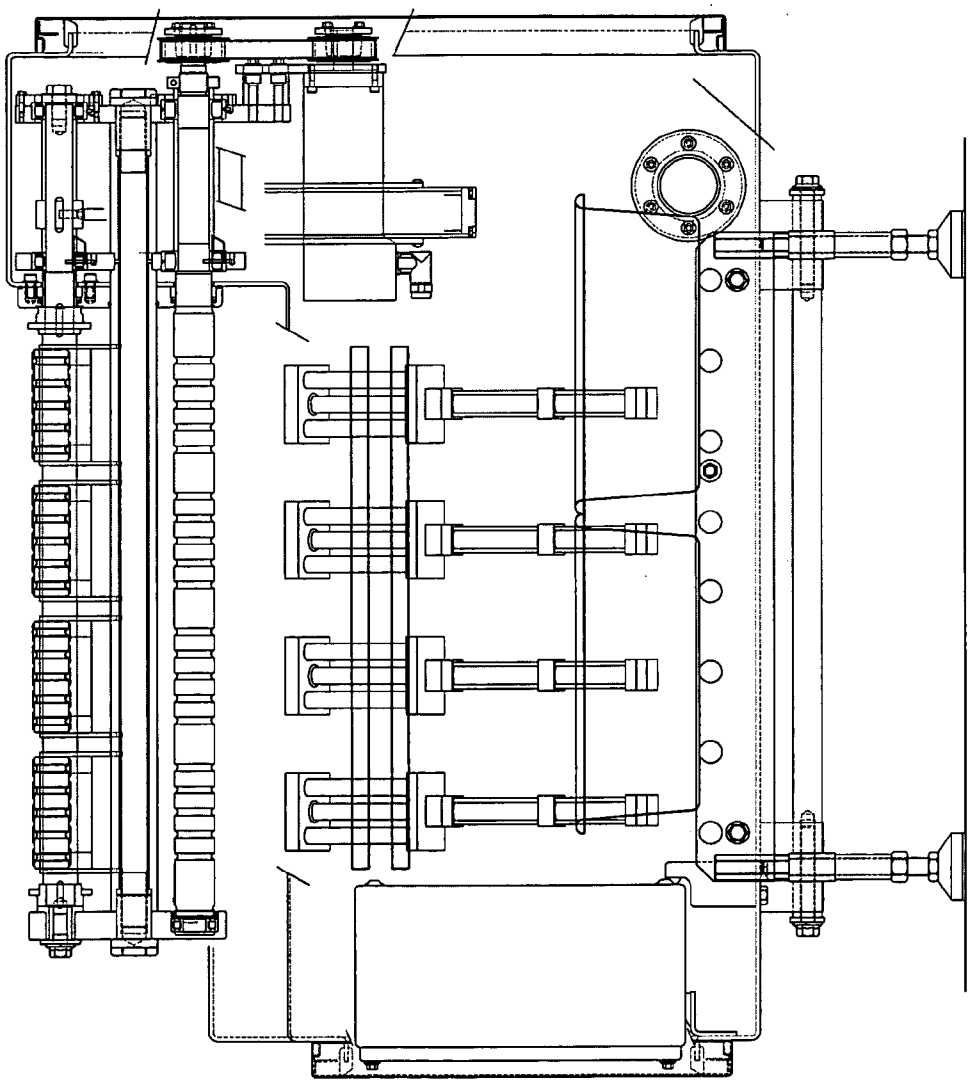

FIG. 60A

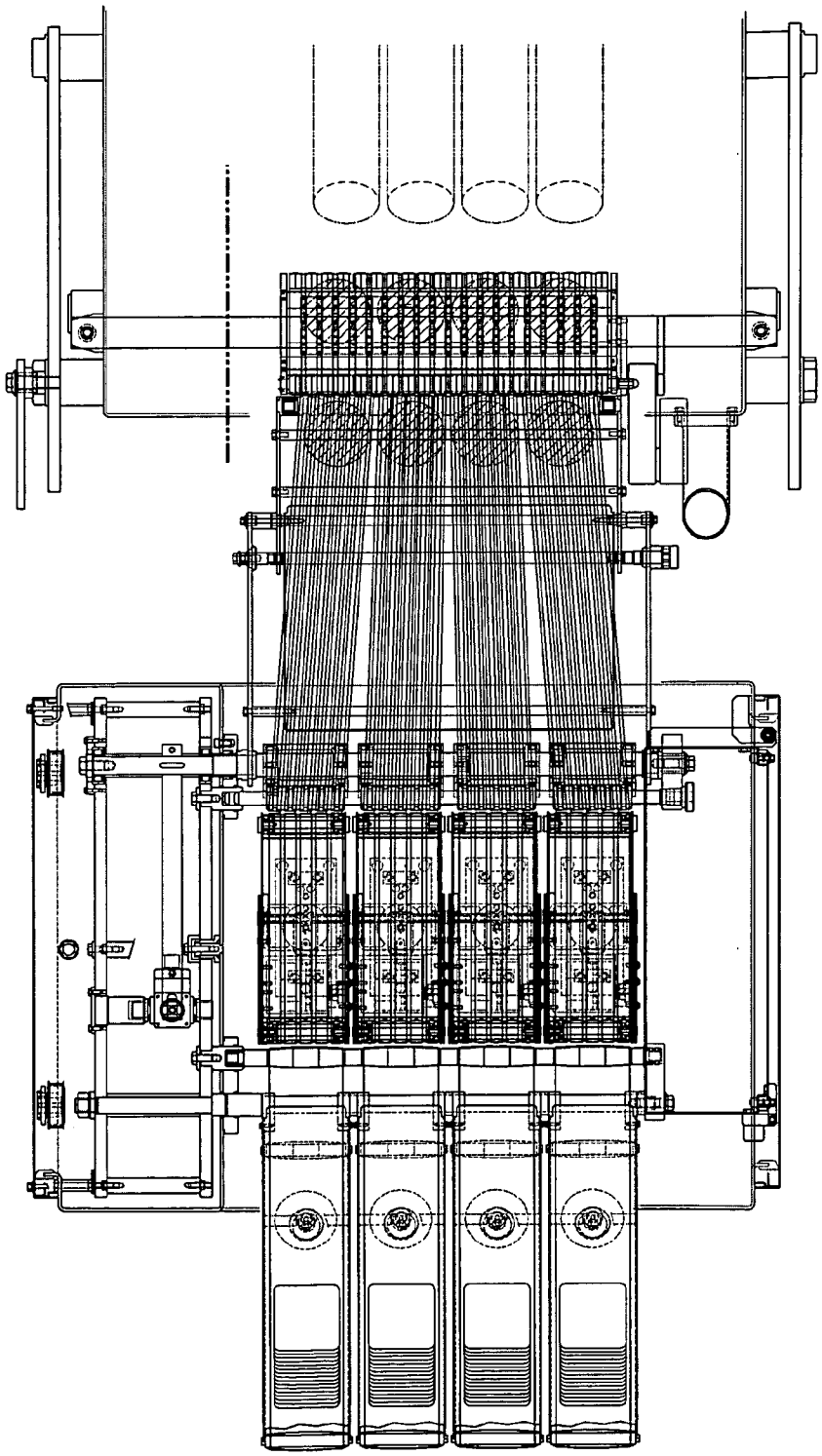

FIG. 60B

FIG. 61

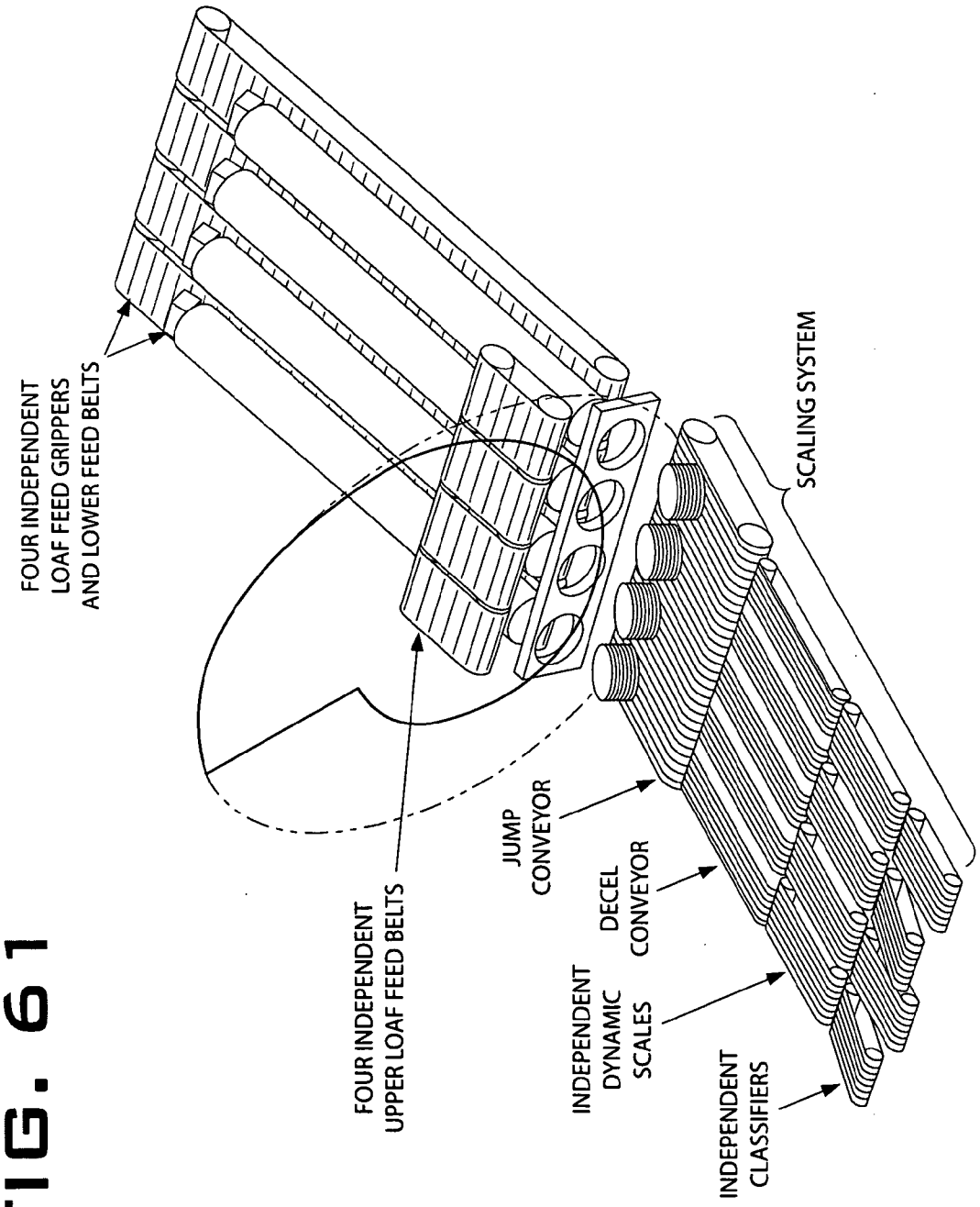
FOUR INDEPENDENT
LOAF FEED GRIPPERS
AND LOWER FEED BELTS
FOUR INDEPENDENT
UPPER LOAF FEED BELTS
JUMP
CONVEYOR
DECEL
CONVEYOR
INDEPENDENT
DYNAMIC
SCALES
INDEPENDENT
CLASSIFIERS
SCALING SYSTEM

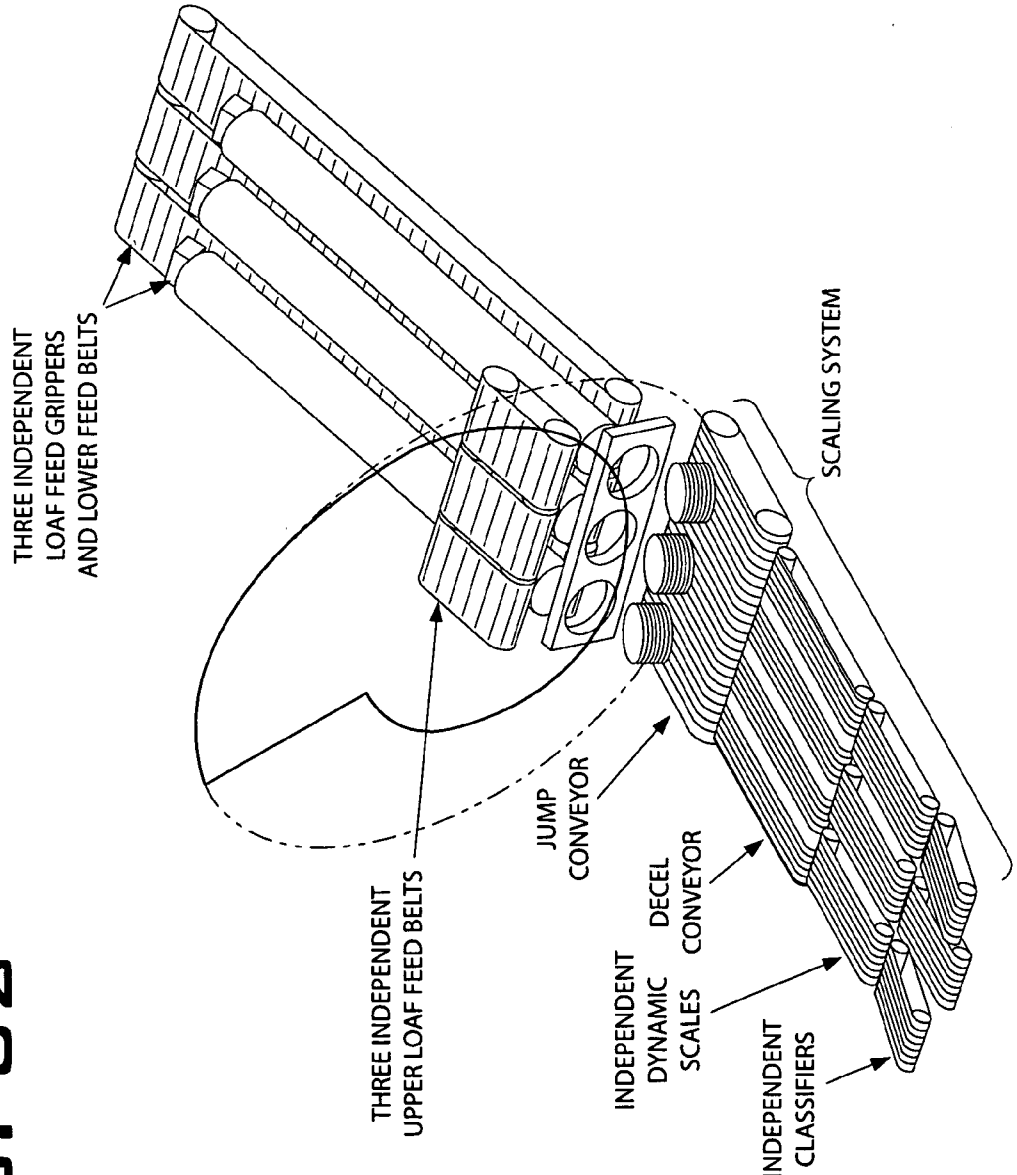
THREE INDEPENDENT
LOAF FEED GRIPPERS
AND LOWER FEED BELTS
THREE INDEPENDENT
UPPER LOAF FEED BELTS
JUMP
CONVEYOR
DECEL
CONVEYOR
INDEPENDENT
DYNAMIC
SCALES
INDEPENDENT
CLASSIFIERS
SCALING SYSTEM

FIG. 62

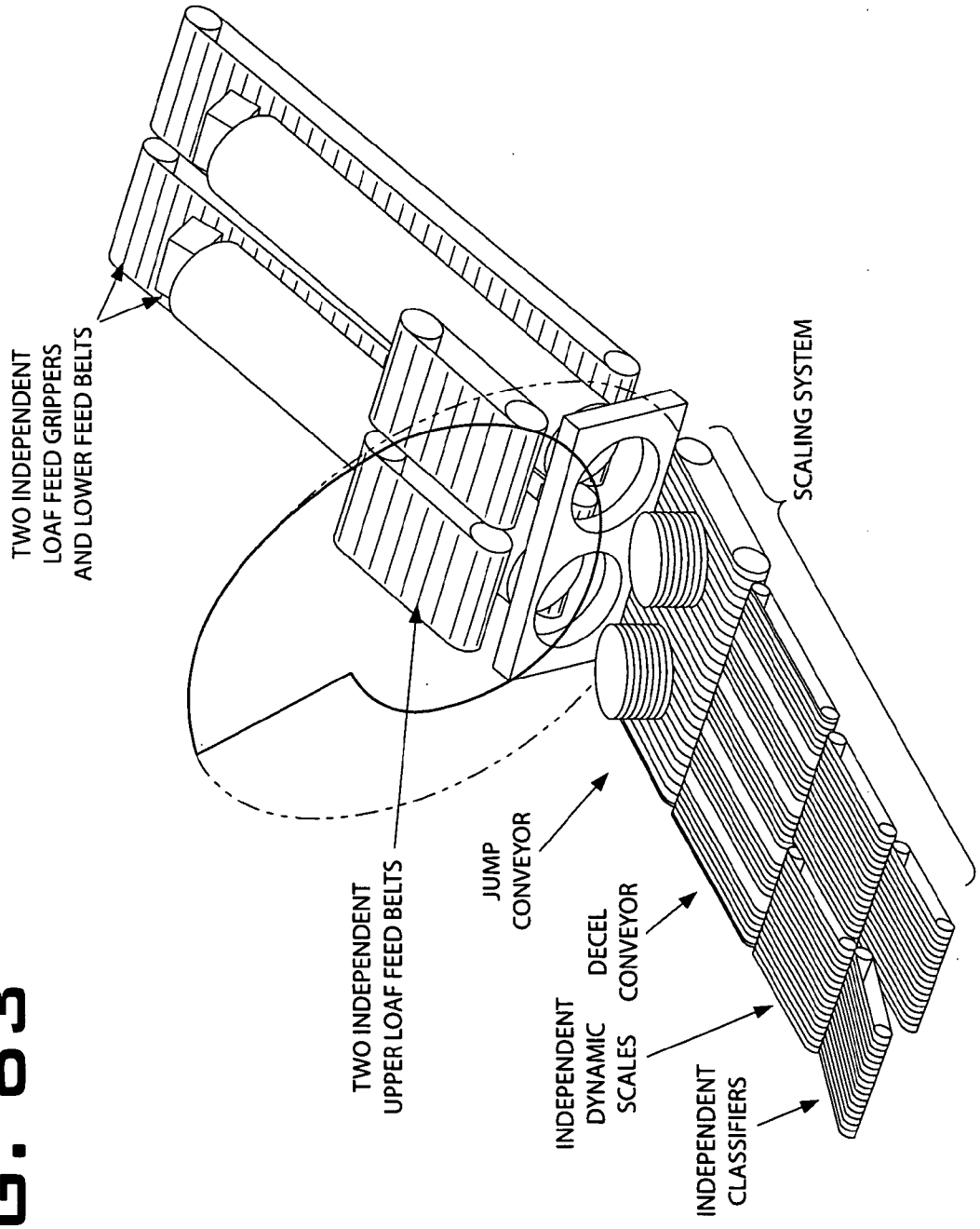
TWO INDEPENDENT
LOAF FEED GRIPPERS
AND LOWER FEED BELTS
TWO INDEPENDENT
UPPER LOAF FEED BELTS
JUMP
CONVEYOR
DECEL
CONVEYOR
INDEPENDENT
DYNAMIC
SCALES
INDEPENDENT
CLASSIFIERS
SCALING SYSTEM

FIG. 63

FIG. 64

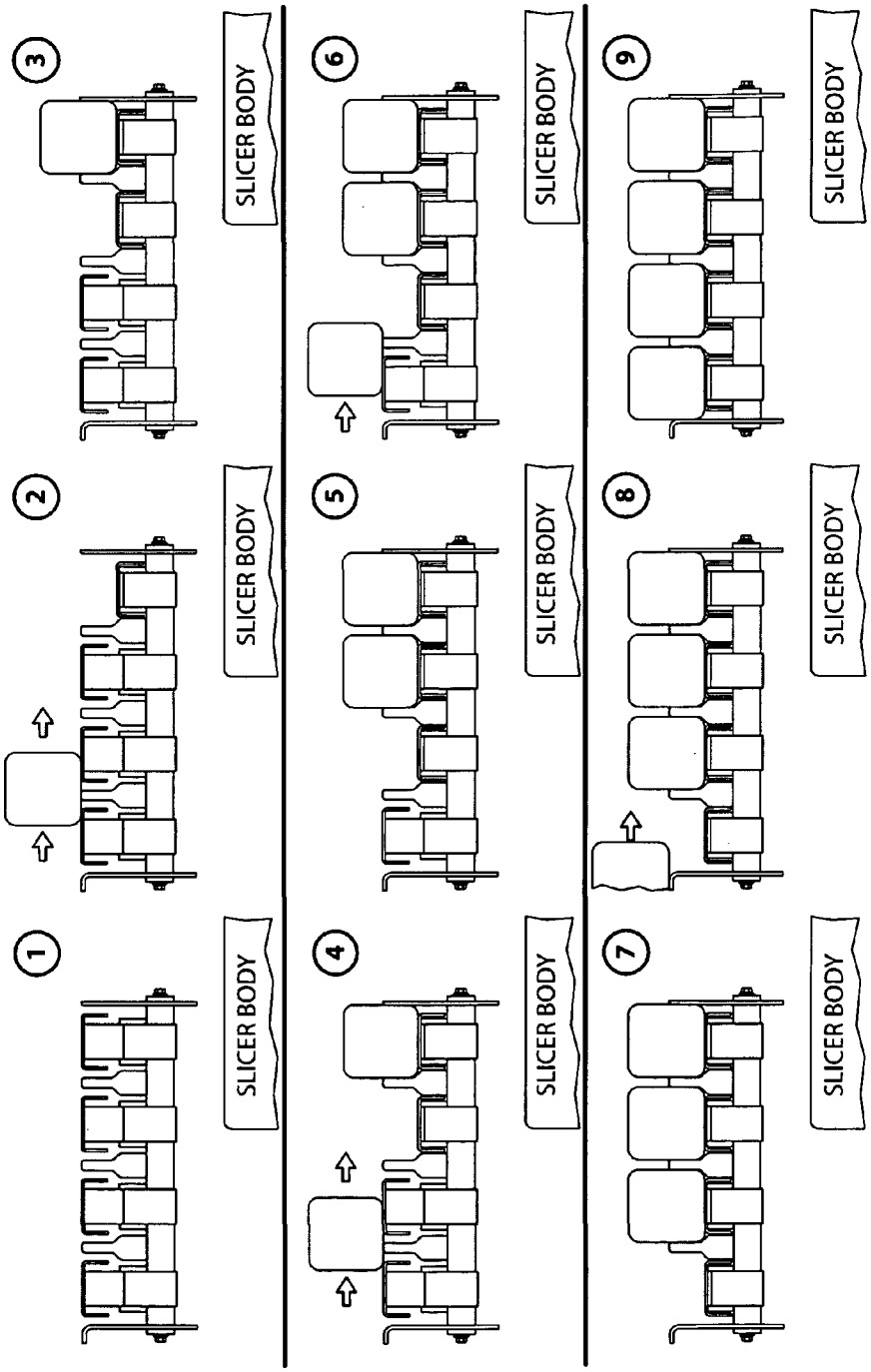
1
SLICER BODY
2
SLICER BODY
3
SLICER BODY
4
SLICER BODY
5
SLICER BODY
6
SLICER BODY
7
SLICER BODY
8
SLICER BODY
9
SLICER BODY

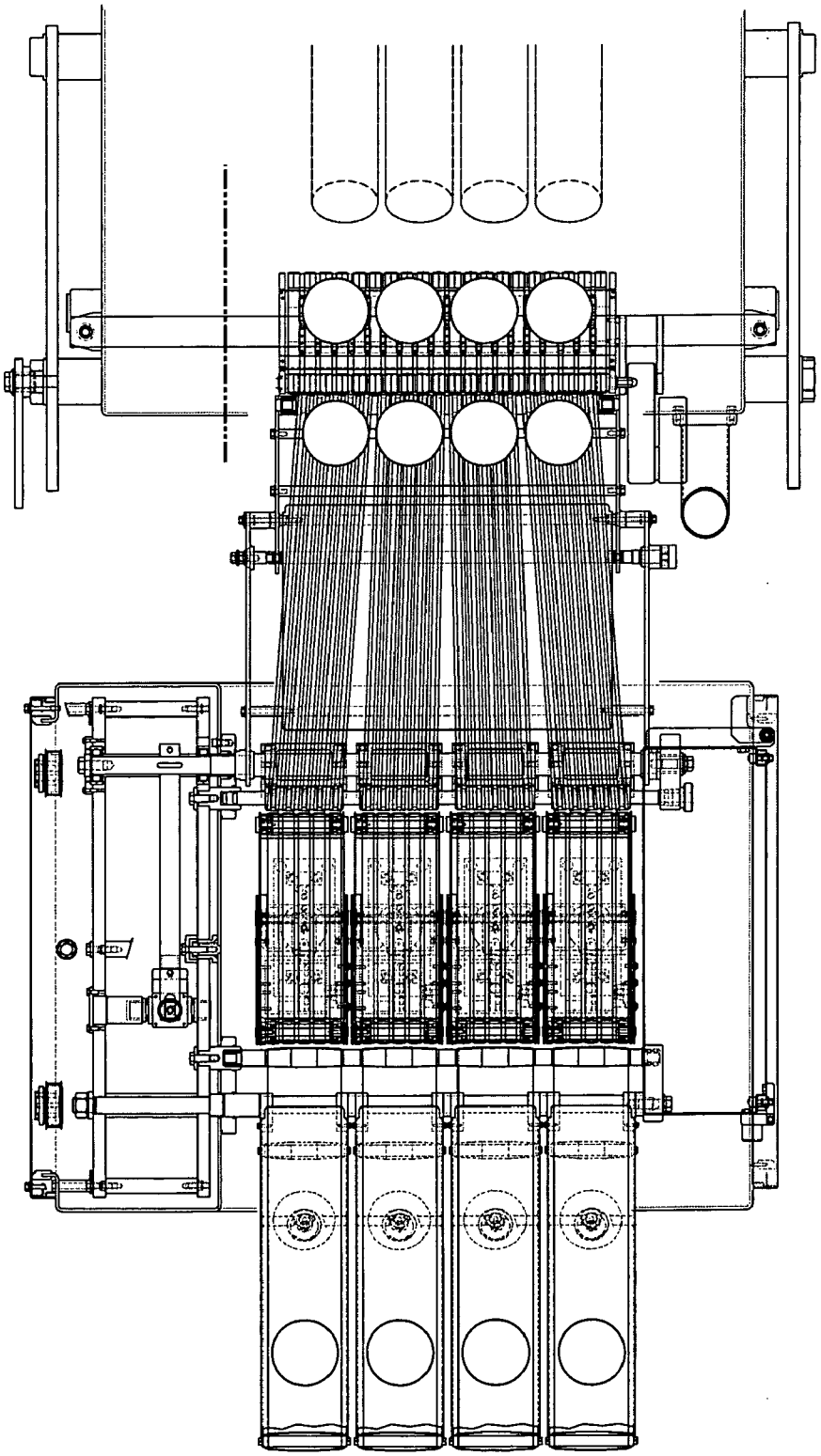

FIG. 65

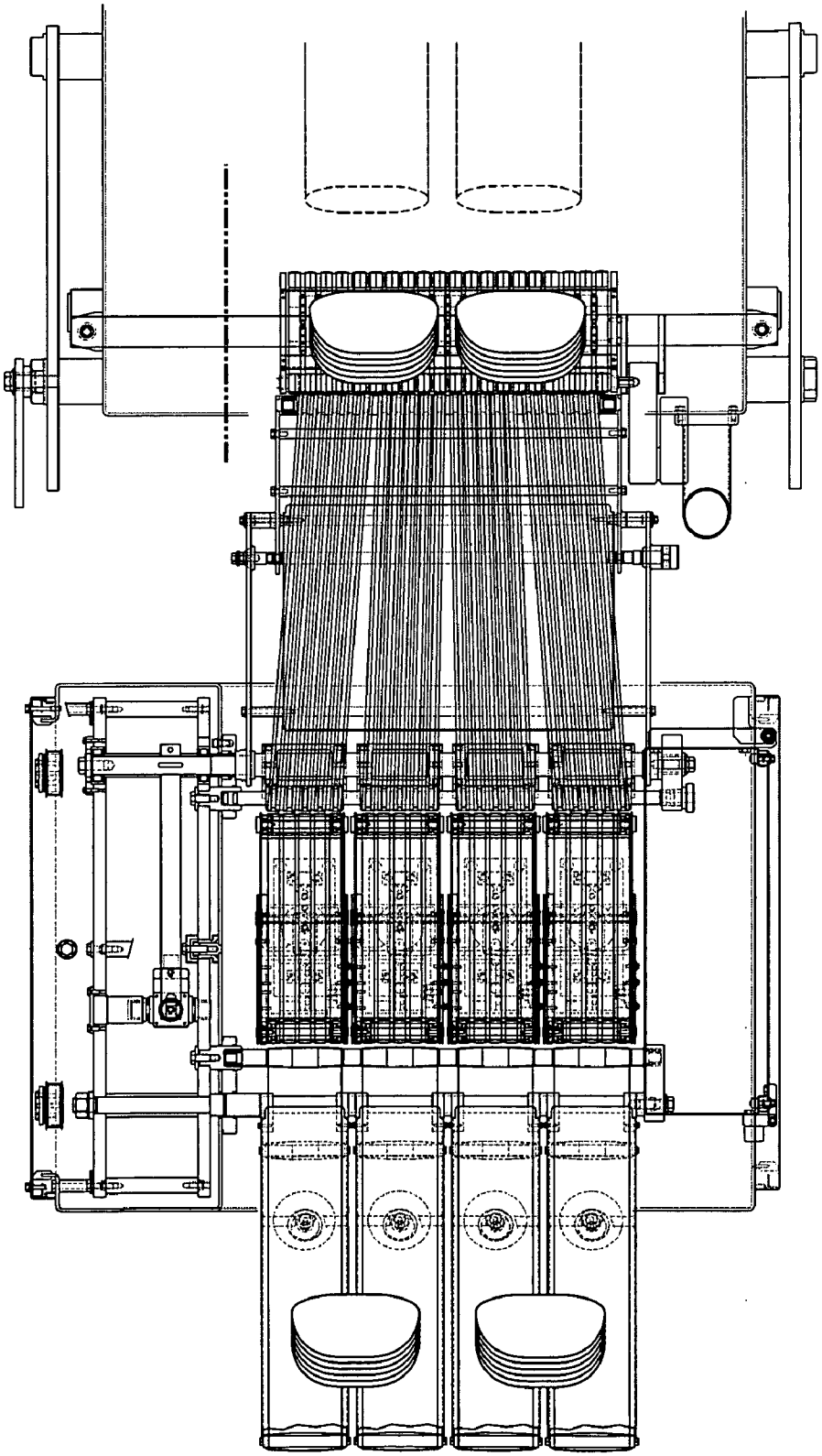

FIG. 66

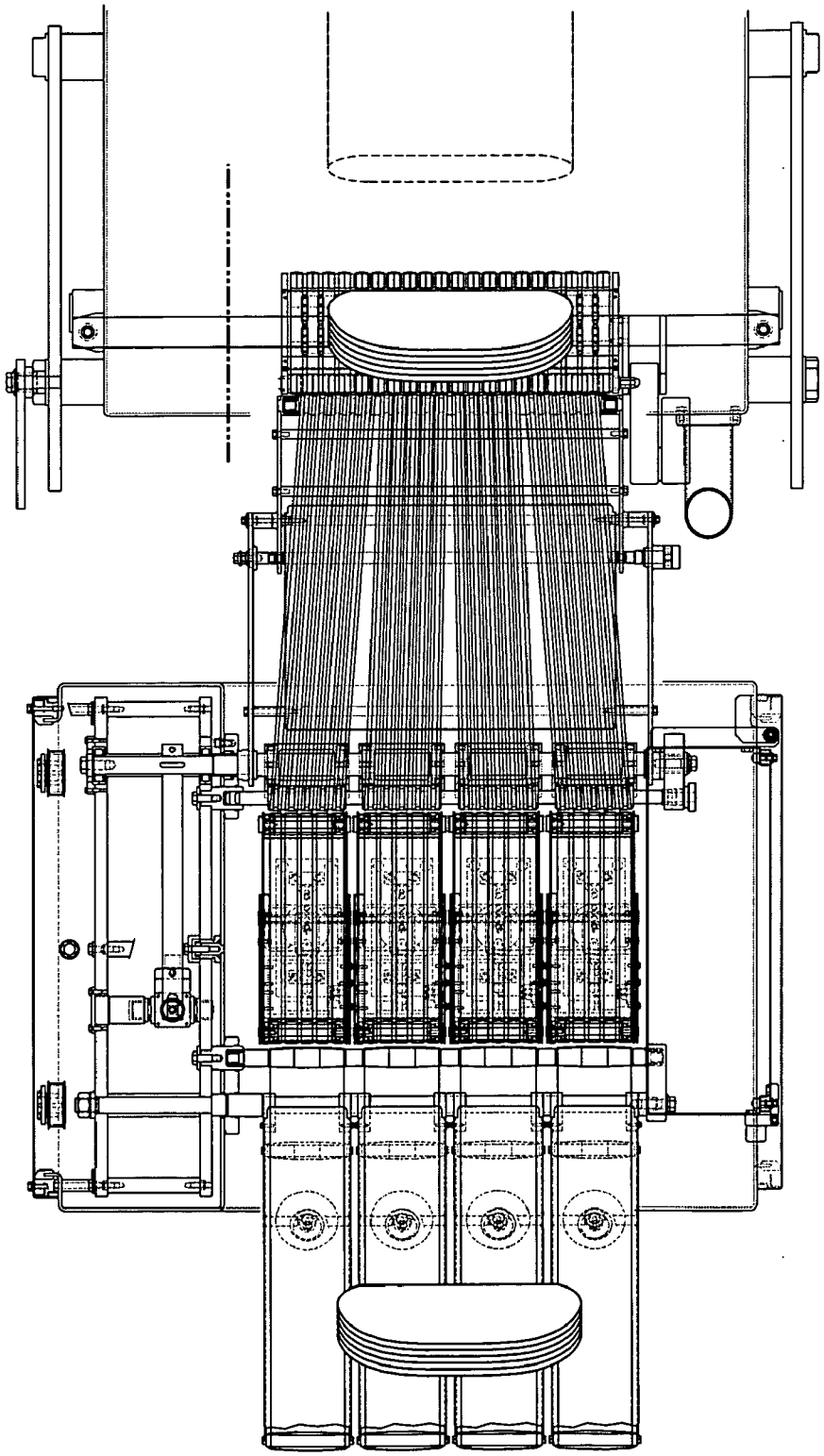

FIG. 67

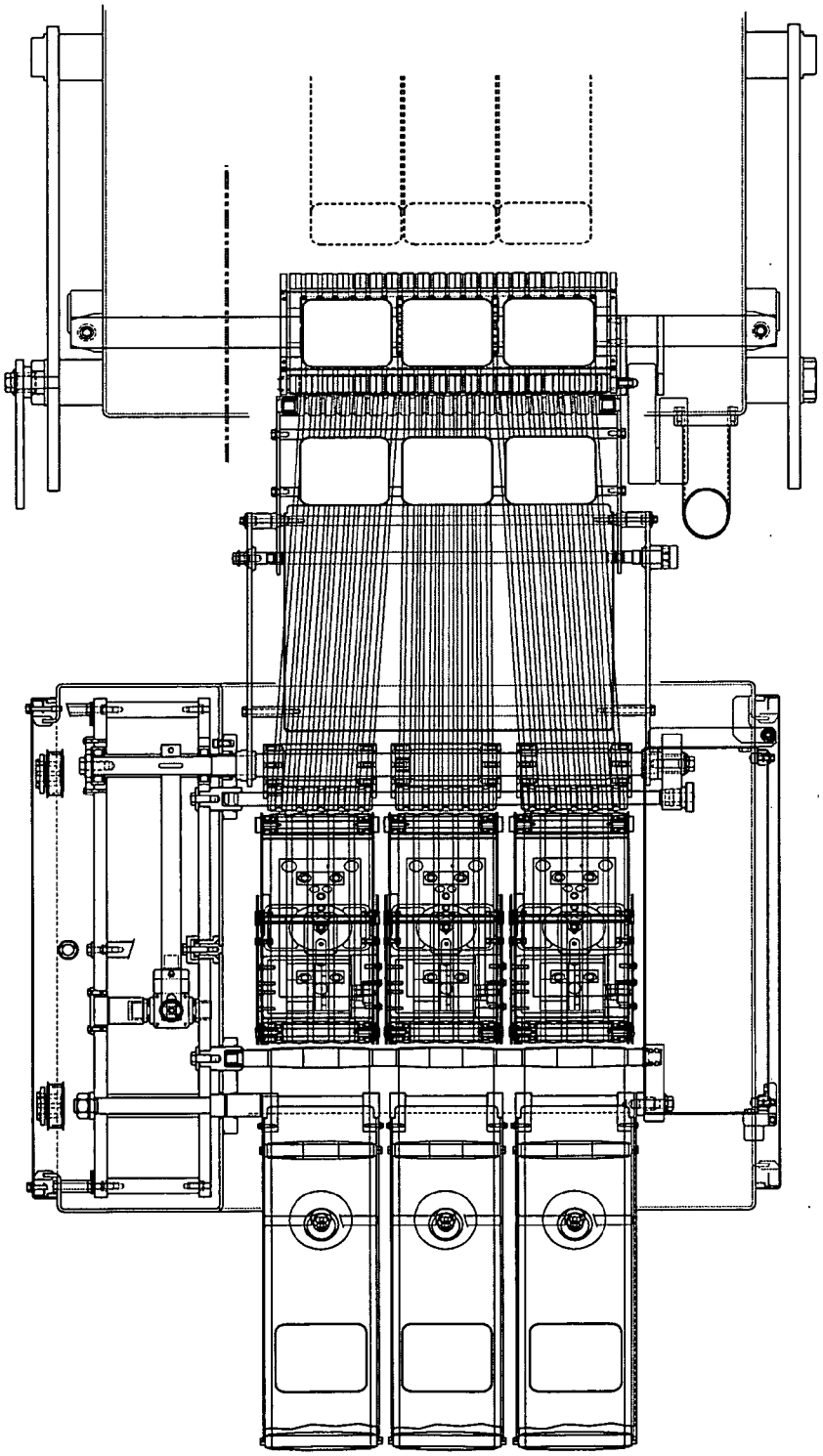

FIG. 68

FIG. 70

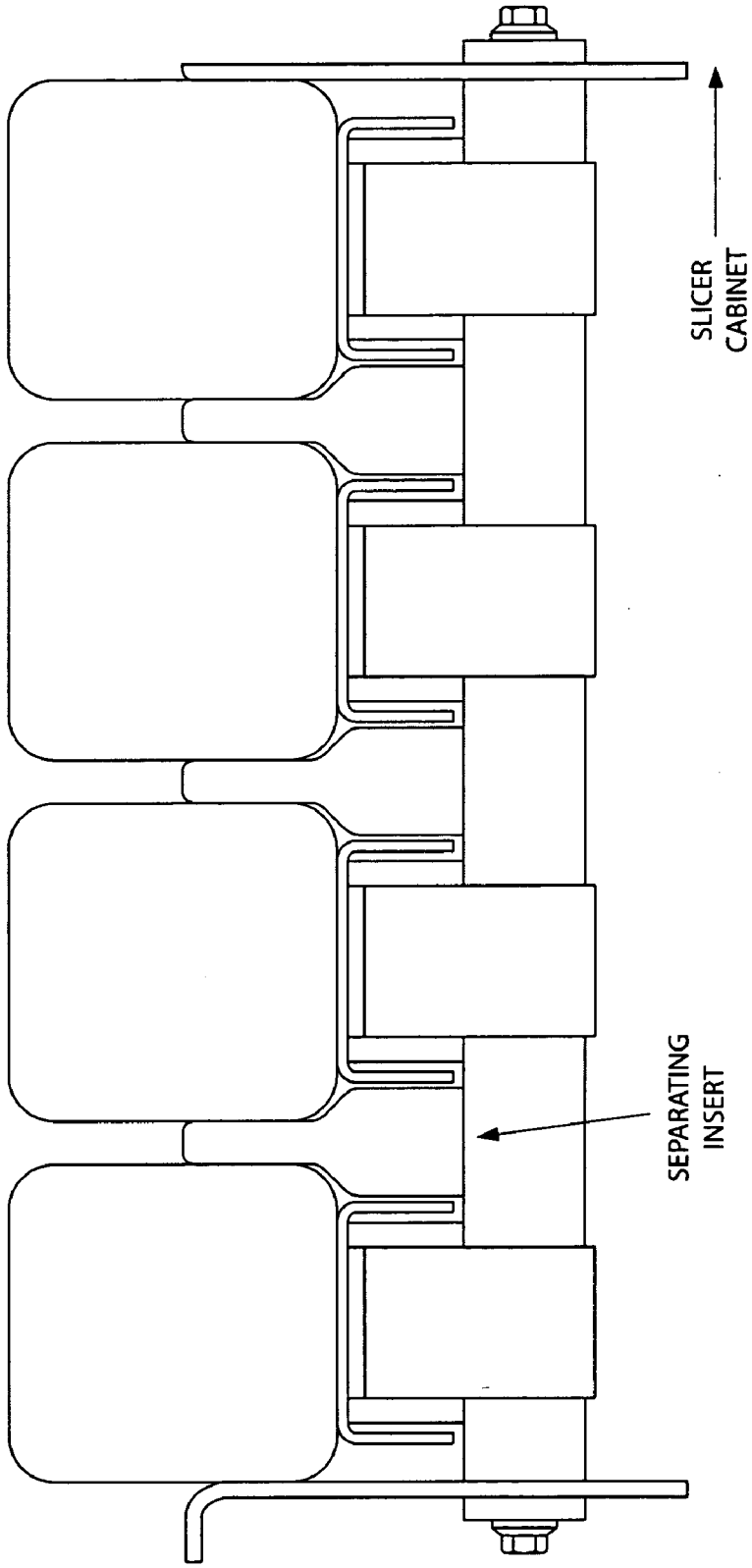

FIG. 71

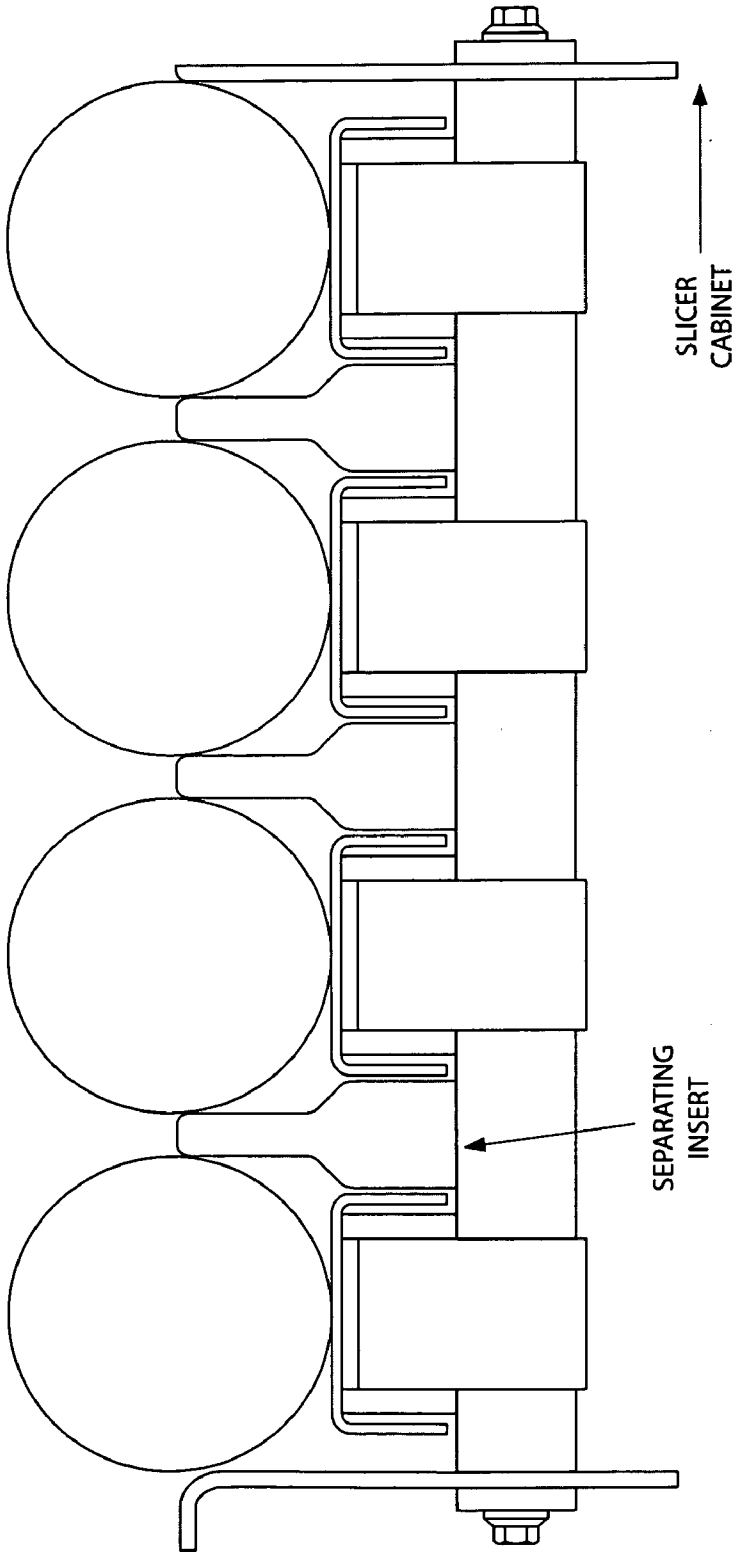

FIG. 72

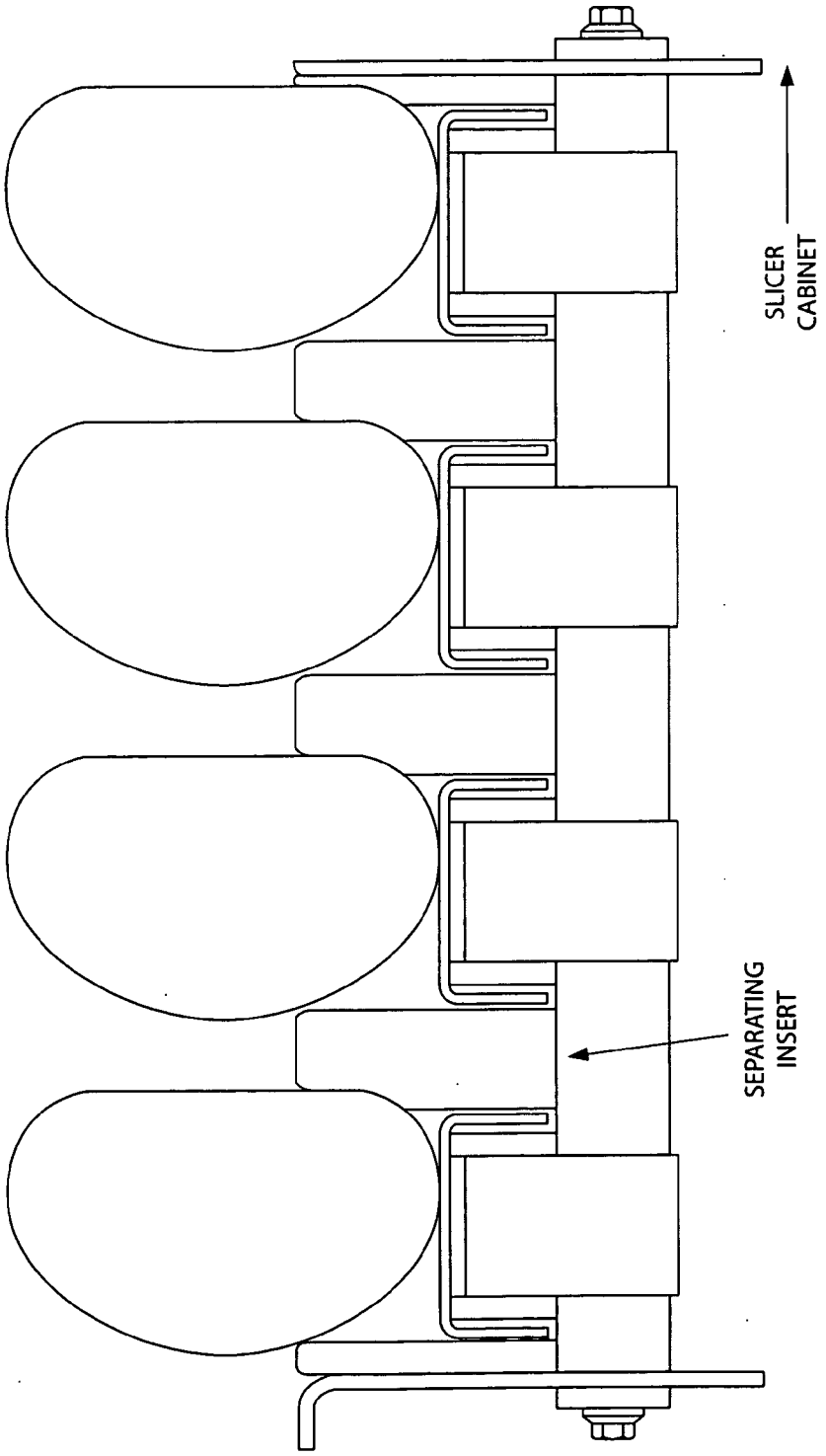

FIG. 73

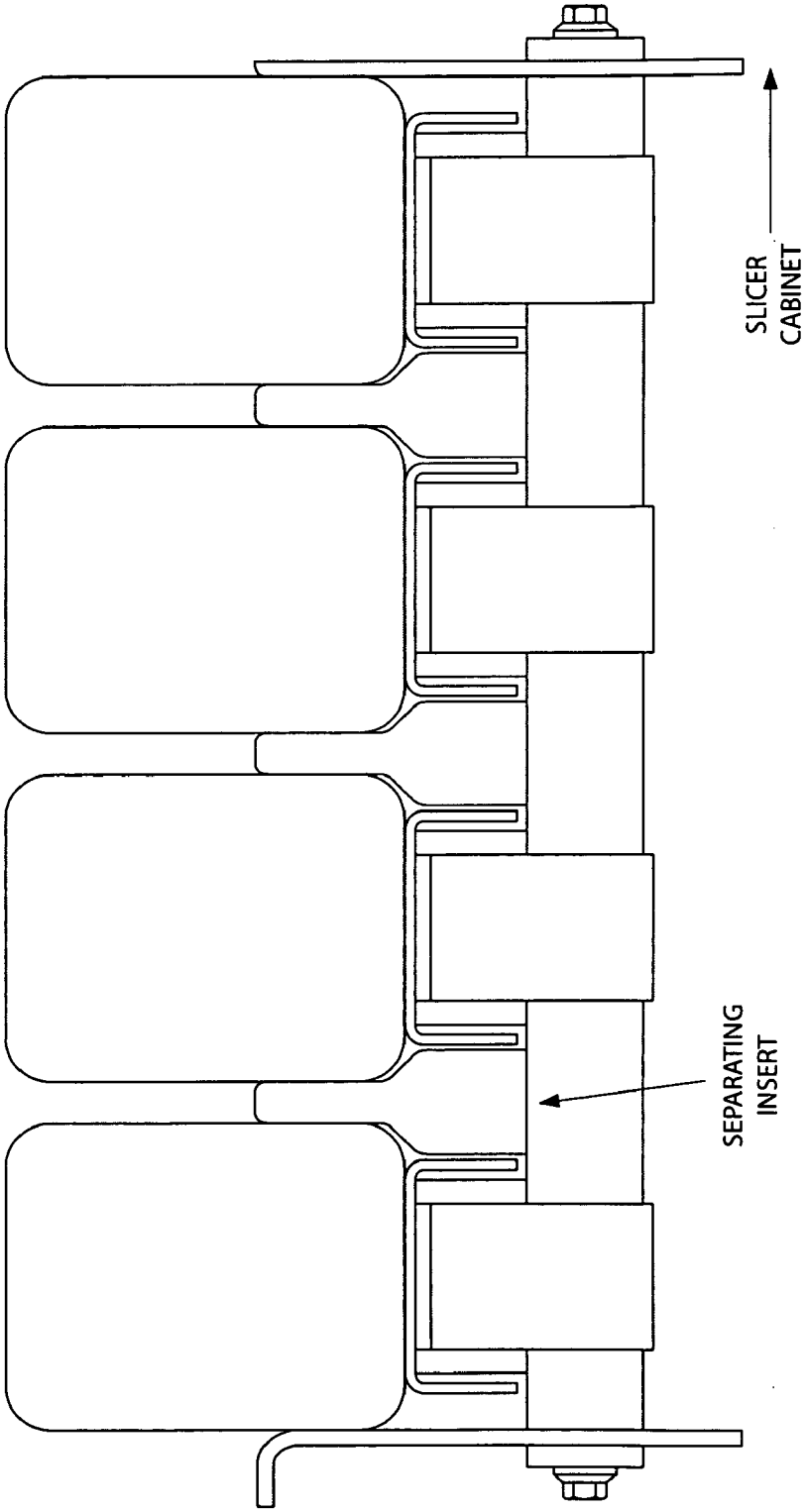

FIG. 74

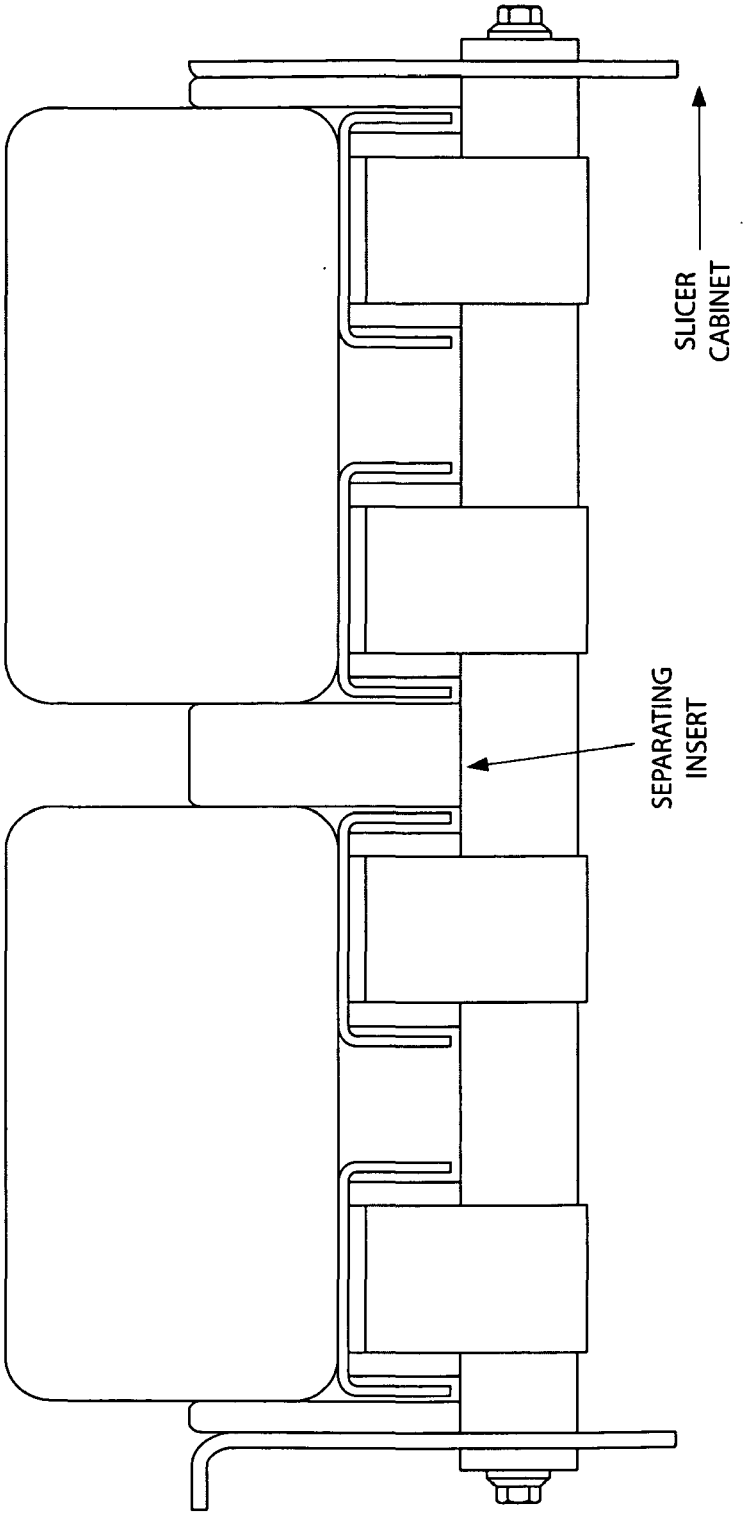

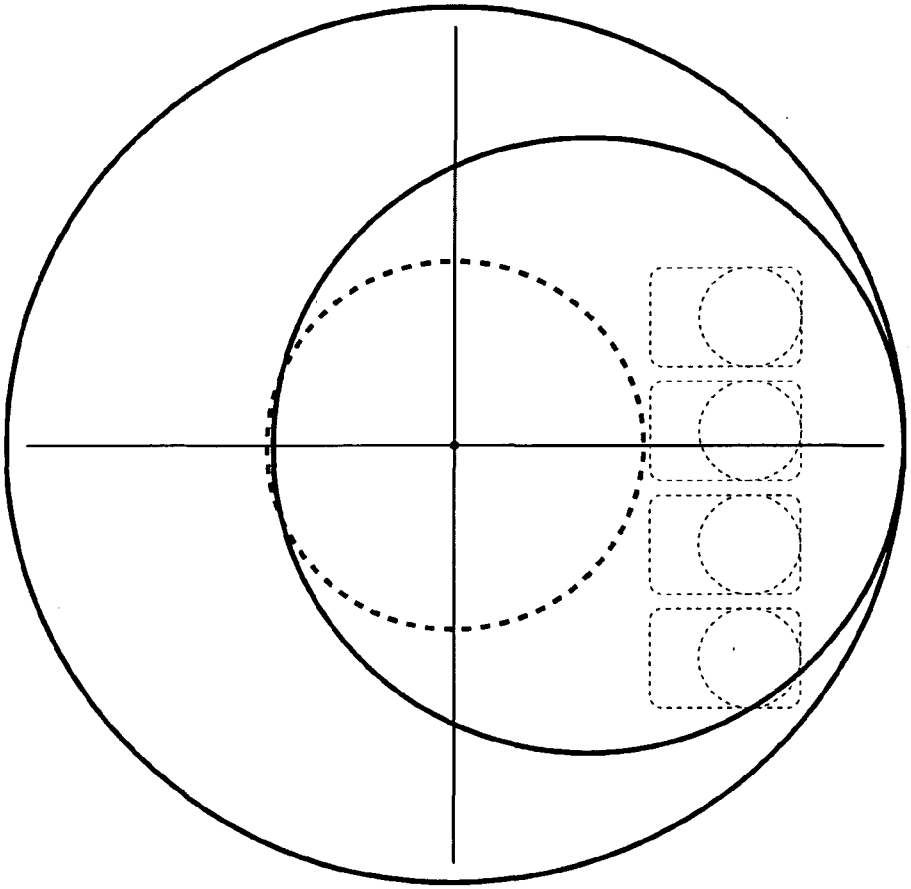

FIG. 75

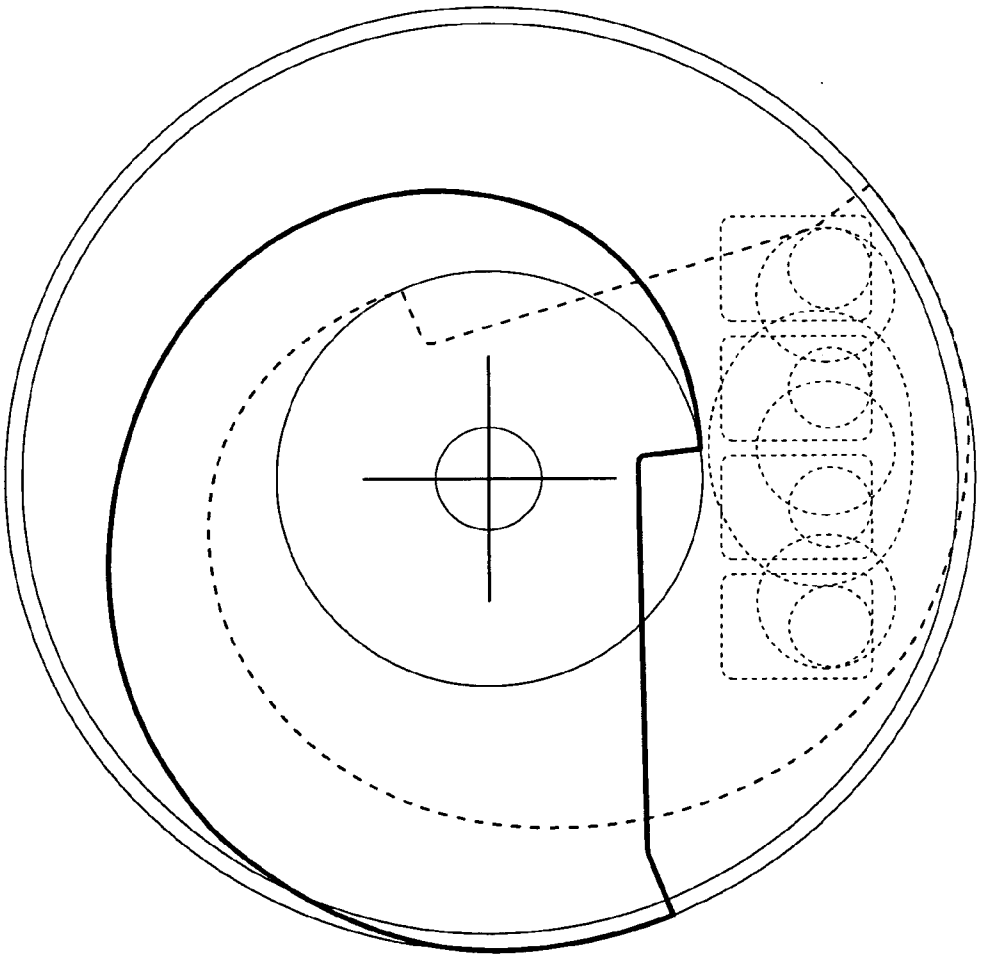

FIG. 76

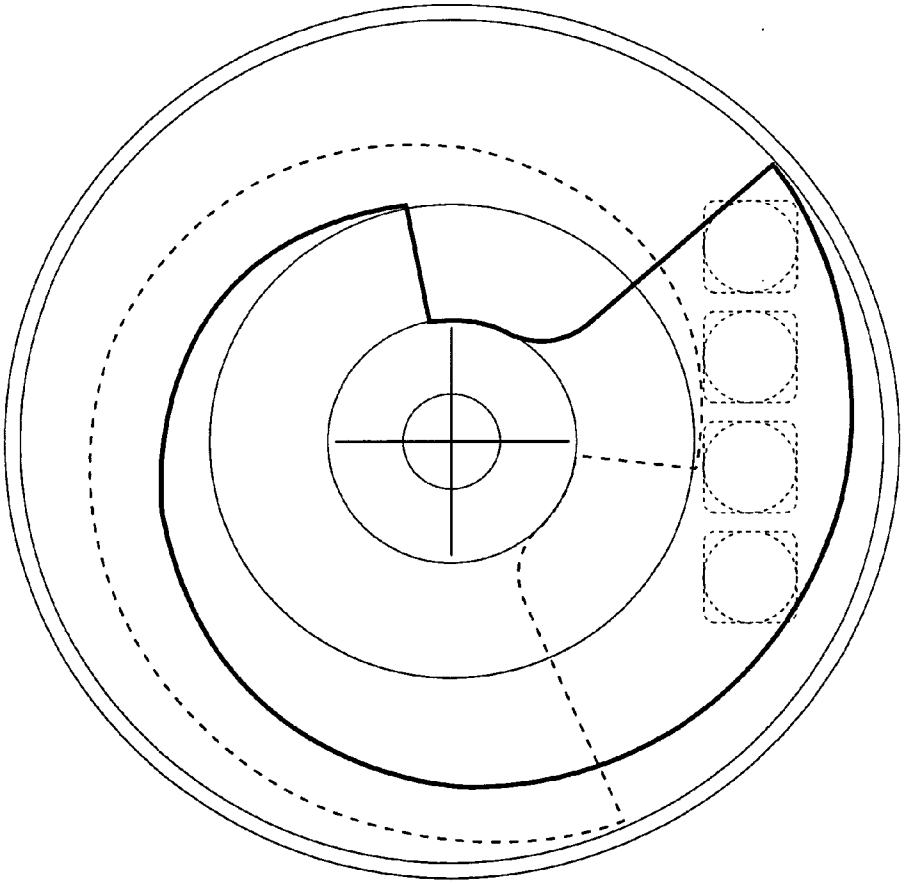

FIG. 77

FIG. 78

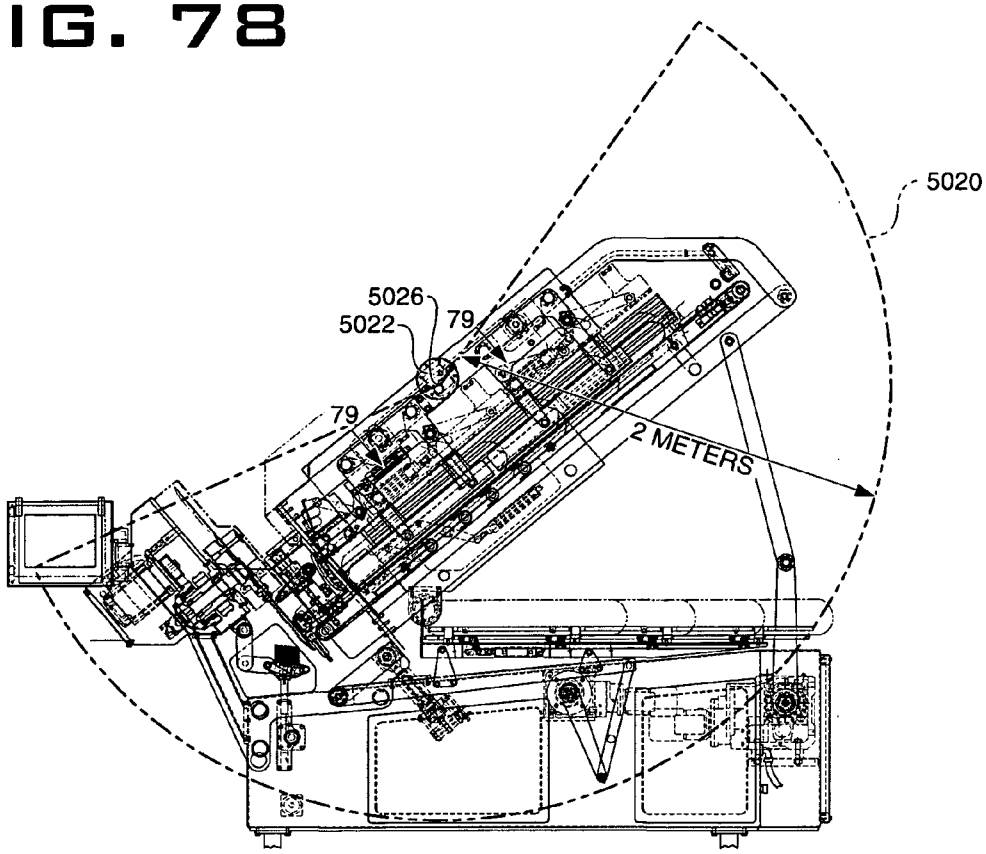
5020
5026
5022
79
79
2 METERS

FIG. 79

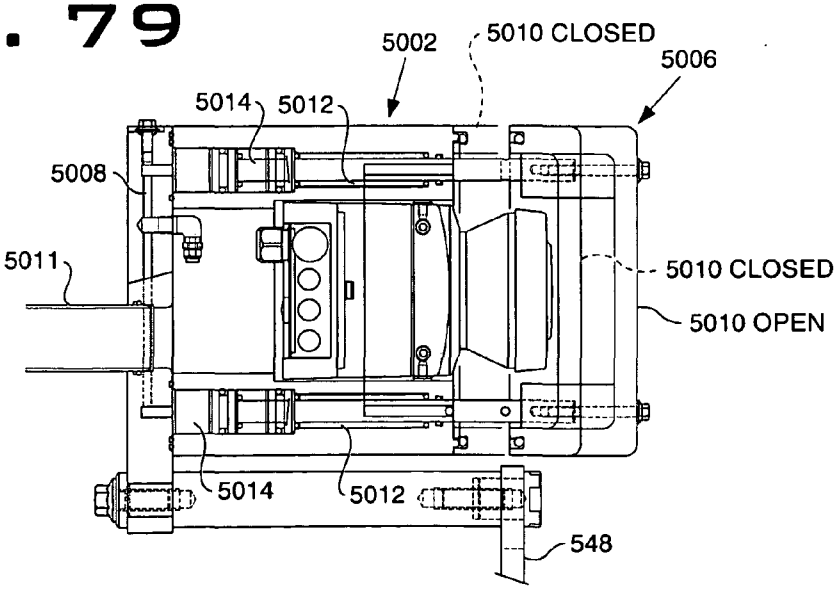
5002
5010 CLOSED
5006
5014
5012
5008
5011
5010 CLOSED
5010 OPEN
5014
5012
548

FIG. 80

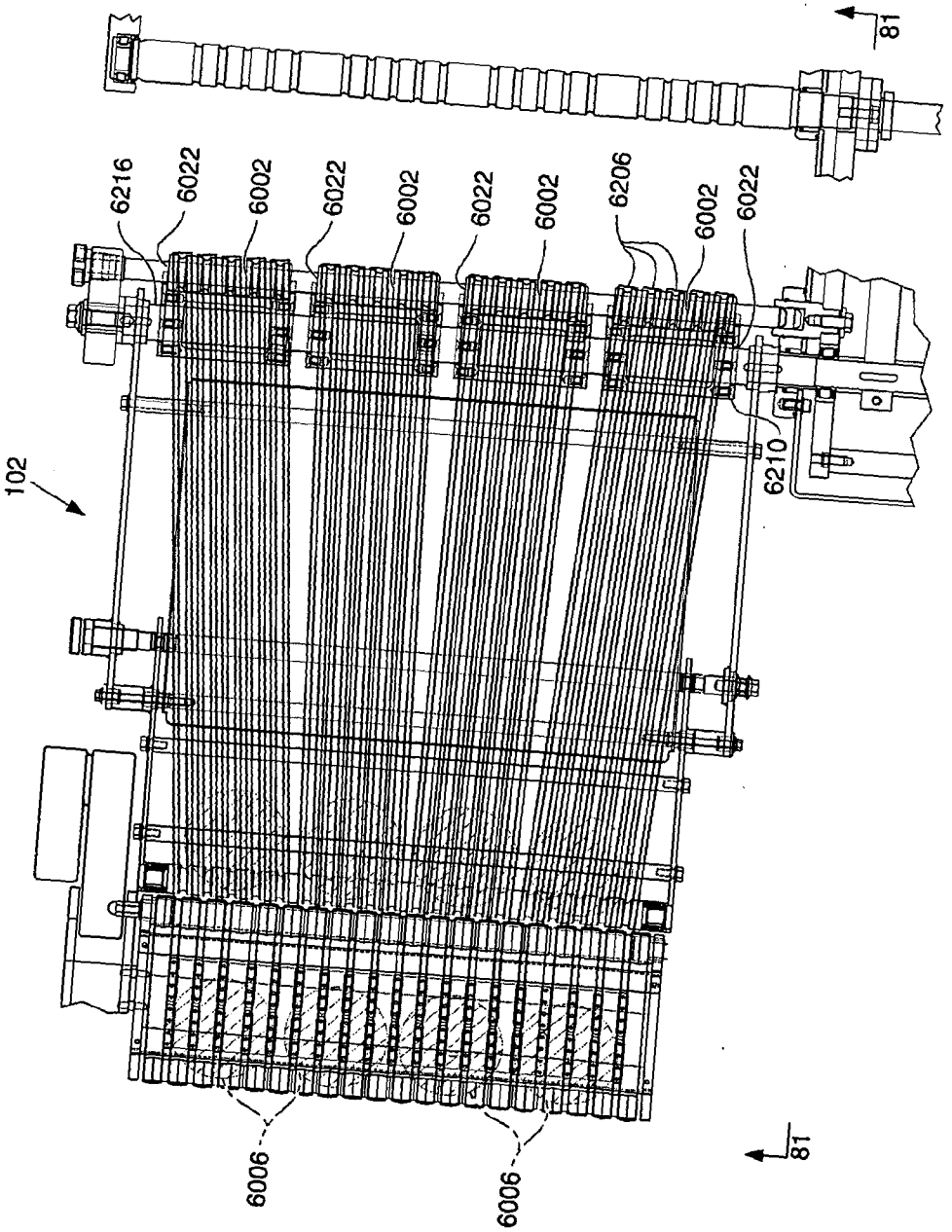
102
6216
6022
6002
6022
6002
6022
6002
6206
6002
6022
6210
6006
6006
81
81

FIG. 81

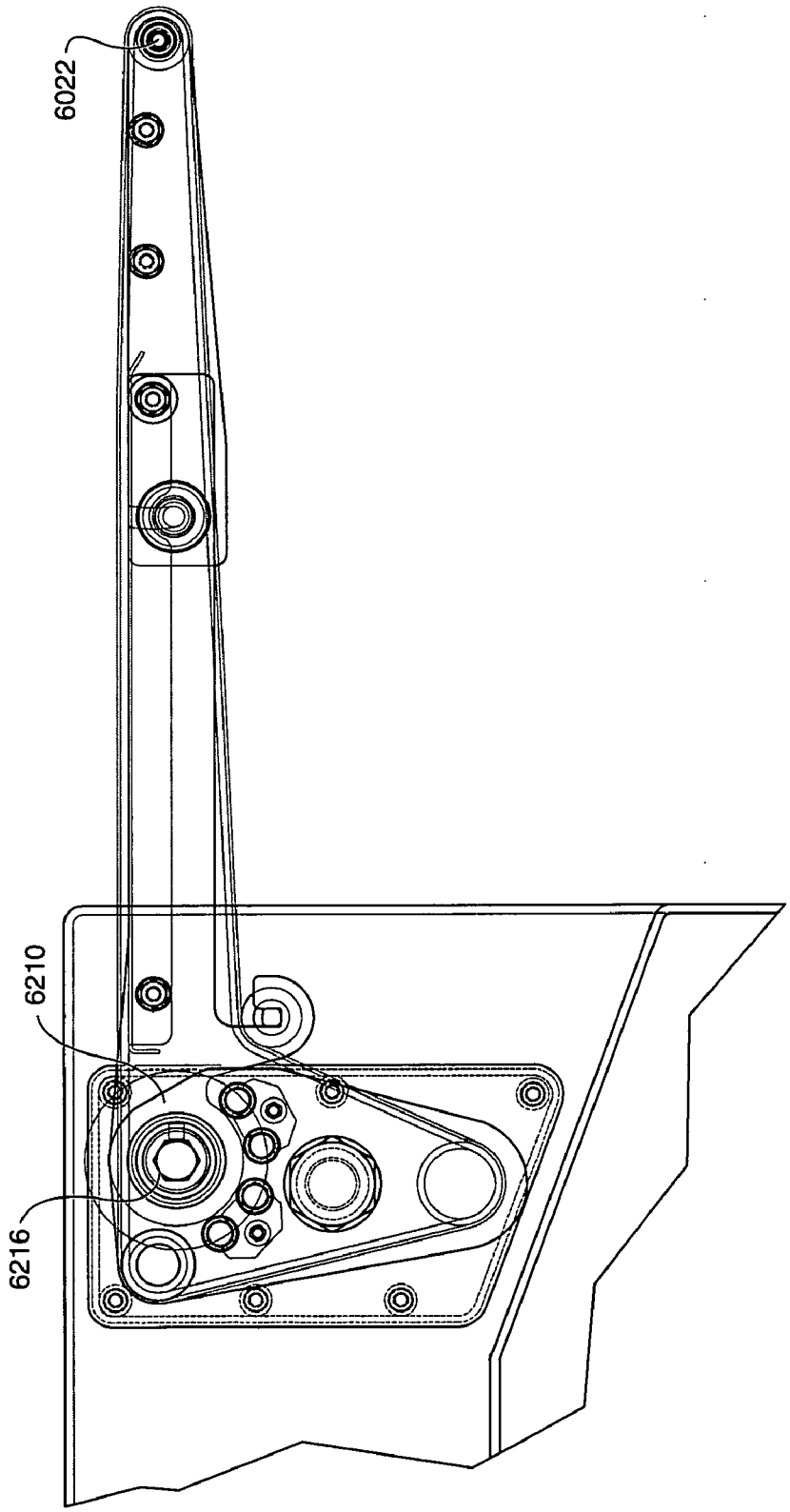

FIG. 83

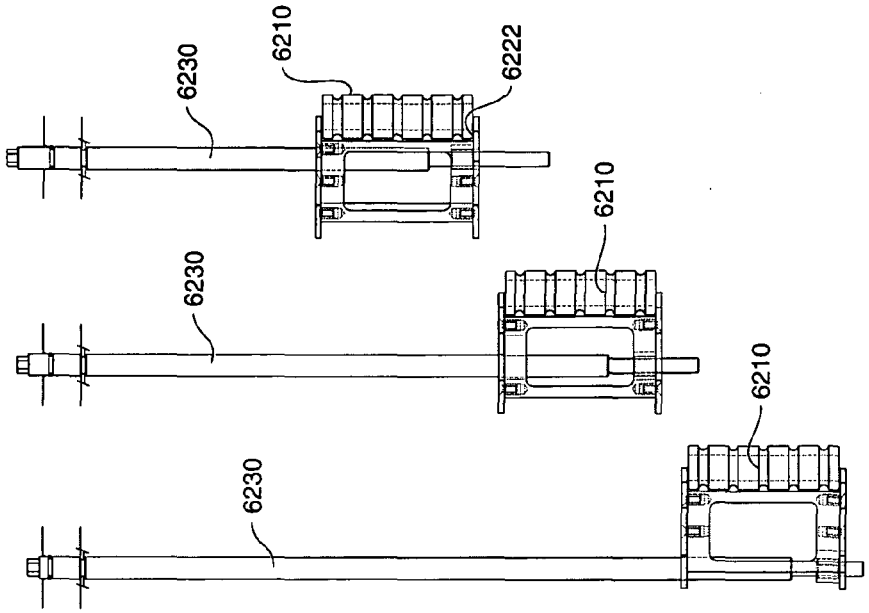

FIG. 82

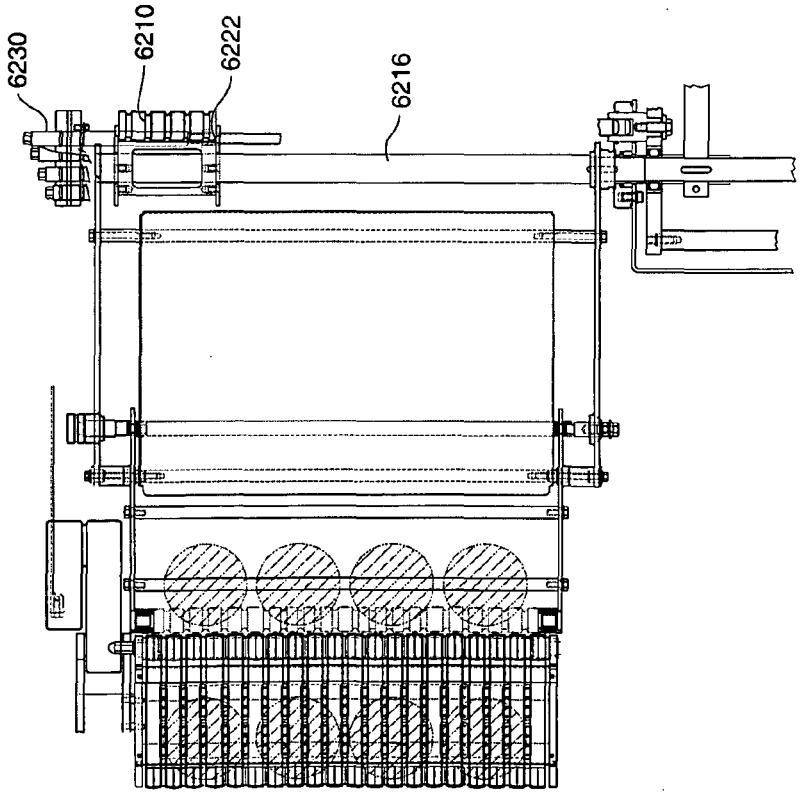

OUTPUT CONVEYOR FOR A FOOD ARTICLE SLICING MACHINE

[0001] This application claims the benefit of U.S. Patent Application No. 60/999,961 filed on Oct. 22, 2007 and U.S. Patent Application No. 61/000,202 filed on Oct. 23, 2007.

BACKGROUND OF THE INVENTION

[0002] Many different kinds of food articles or food products, such as food slabs, food bellies, or food loaves are produced in a wide variety of shapes and sizes. There are meat loaves made from various meats, including ham, pork, beef, lamb, turkey, and fish. The meat in the food loaf may be in large pieces or may be thoroughly comminuted. These meat loaves come in different shapes (round, square, rectangular, oval, etc.) and in different lengths up to six feet (183 cm) or even longer. The cross-sectional sizes of the loaves are quite different; the maximum transverse dimension may be as small as 1.5 inches (4 cm) or as large as ten inches (25.4 cm). Loaves of cheese or other foods come in the same great ranges as to composition, shape, length, and transverse size.

[0003] Typically the food loaves are sliced, the slices are grouped in accordance with a particular weight requirement, and the groups of slices are packaged and sold at retail. The number of slices in a group may vary, depending on the size and consistency of the food article and the desire of the producer, the wholesaler, or the retailer. For some products, neatly aligned stacked slice groups are preferred. For others, the slices are shingled or folded so that a purchaser can see a part of every slice through a transparent package.

[0004] Food article scan be sliced on high speed slicing machines such as disclosed in U.S. Pat. Nos. 5,628,237 or 5,974,925 or as commercially available as the FX180® slicer available from Formax, Inc. of Mokena, Ill., USA.

[0005] The FX180® machine can be configured as an automatically loaded, continuous feed machine, or an automatically loaded, back-clamp or gripper type machine.

[0006] For an automatically loaded, continuous feed machine, side-by-side upper and lower conveyor pairs drive food articles into the cutting plane. A gate is located in front of the conveyors. The initial food articles are loaded with leading ends abutting the gate. The gate is lowered and the food articles proceed into the conveyors. When the initial food articles are sliced to the extent that the trailing ends of the food articles clear the gate, the gate is raised and new food articles are loaded in the feed paths, held back by the gate. Shortly thereafter the gate is lowered and new food articles slide down to where lead ends of the new food articles abut trailing ends of the initial food articles being sliced. The new food articles are driven into the cutting plane trailing the initial food articles. Food articles are sequentially and continuously loaded in this manner, lead end-to-trailing end, in abutting contact with the preceding food articles.

[0007] U.S. Pat. No. 5,628,237 and European patent EP 0 713 753 describe a back-clamp or gripper type slicing machine. According to this type of slicing machine, two food articles are loaded onto a lift tray and the lift tray is raised to a ready-to-sweep position. Two loaf grippers are retracted after the previous food articles are sliced. During retraction of the loaf grippers, loaf-to-slicing blade gate doors are closed and ends of the previous food articles are dropped through a loaf end door. After the grippers have reached the retracted position or "home position" remote from the slicing blade, a loaf sweep mechanism is activated, moving the food articles laterally together into the slicing position. A spacing mechanism moves down and spaces the food articles apart. The grippers then advance after it has been determined that the loaf sweep mechanism has moved the food articles to the slicing position. The grippers have onboard sensing mechanisms that are triggered by contact with the food articles. After sensing and gripping the food articles, the food articles are retracted slightly, and the loaf-to-slicing blade gate doors are opened and the food articles are advanced to the slicing plane of the slicing blade. The loaf sweep mechanism retracts and the loaf lift tray lowers, ready for the next reload cycle. According to this design, in practice, the reload cycle is accomplished in about eight seconds. In a high volume slicing operation, reload cycle time can be a significant limitation to optimum production efficiency.

[0008] In either configuration the FX180® slicing machine has achieved great commercial success. However, the present inventors have recognized that it would be desirable to slice up to four food articles or more with independent feeding and weighing capabilities, with hygienic and operational enhancements.

SUMMARY OF THE INVENTION

[0009] The present invention provides an output conveyor for a high speed slicing apparatus that provides advantages in productivity, food hygiene, and operation. The slicing apparatus provides a mechanism and method for slicing multiple food articles with independency of feed rate and the ability to weigh each product group from each food article respectively to achieve optimal weight control and yield of each food article.

[0010] The output conveyor comprises four deceleration conveyors that receive slices from a jump conveyor. Each deceleration conveyor laterally positions slices in an output lane. The deceleration conveyors have a pivotal axis for matching an elevation of an end of said deceleration conveyor with an elevation of an upstream conveyor. The output conveyor also comprise four weighing conveyors for weighing slices received from upstream components. The weighing conveyors each comprise a removable carrying unit for turning a conveyor belt and a drive unit for driving said carrying unit. The removable carrying unit, among other things, enables easy cleaning of the conveyor parts in contact with the slices. Each drive unit independently drives the weighing conveyor.

[0011] The combination of the invention provides multiple configurations to slice, weigh and classify 1, 2, 3, 4 or more food articles. Numerous other advantages and features of the present invention will become readily apparent from the following detailed description of the invention and the embodiments thereof, and from the accompanying drawings.

BRIEF DESCRIPTION OF THE DRAWINGS

[0012] FIG. **1** is a near side elevational view of a slicing machine and a weighing and classifying conveyor combination of the present invention;

[0013] FIG. **2** is an elevational view of the combination of FIG. **1** with some panels removed or made transparent illustrating some underlying components;

[0014] FIG. **3** is an elevational view of the combination of FIG. **1** with further panels removed or made transparent and underlying components revealed;

[0015] FIG. **4** is a rear view of the combination shown in FIG. **3**;

[0016] FIG. **4**A is an elevational view of the combination of FIG. **1** in a clean-up, non-operational position;

[0017] FIG. **4**B is a fragmentary, elevational, enlarged view of a portion of the slicing machine shown in FIG. **1**;

[0018] FIG. **5** is a far side elevational view of the combination shown in FIG. **1**;

[0019] FIG. **6** is a far side perspective view of the combination shown in FIG. **5**;

[0020] FIG. **7** is a rear view of the combination shown in FIG. **3**;

[0021] FIG. **8** is an enlarged, fragmentary near side elevational view of food article lift tray and food article positioning systems;

[0022] FIG. **8**A is an enlarged fragmentary sectional view taken generally along line **8**A-**8**A of FIG. **9**;

[0023] FIG. **9** is a fragmentary plan view of a food article lift tray;

[0024] FIG. **10** is a rear view of the food article lift tray shown in FIG. **9**;

[0025] FIG. **11** is a rear view of the food article lift tray and food article transfer apparatus;

[0026] FIG. **12** is a fragmentary perspective view of the food article lift tray and food article transfer apparatus;

[0027] FIG. **12**A is an enlarged elevational view of the food article transfer apparatus;

[0028] FIG. **13** is a plan view of the food article transfer apparatus;

[0029] FIG. **14** is a plan view of the food article feed apparatus;

[0030] FIG. **15** is an elevational view of the food article feed apparatus shown in FIG. **14**;

[0031] FIG. **15**A is a sectional view taken generally along line **15**A-**15**A;

[0032] FIG. **16** is an elevational view of the food article feed apparatus;

[0033] FIG. **17** is a plan view of a gripper taken from the food article feed apparatus of FIG. **16**;

[0034] FIG. **17**A is a front view of the gripper taken generally along line **17**A-**17**A of FIG. **17**;

[0035] FIG. **18** is a sectional view taken generally along line **18**-**18** of FIG. **17**A;

[0036] FIG. **19** is a fragmentary perspective view of the food article feed apparatus;

[0037] FIG. **20** is an enlarged sectional view of the attachment of the gripper to the belt;

[0038] FIG. **21** is a sectional view taken generally along line **20**-**20** of FIG. **16**;

[0039] FIG. **22** is a sectional view taken generally along line **22**-**22** of FIG. **21**;

[0040] FIG. **23** is a sectional view taken generally along line **23**-**23** of FIG. **21**;

[0041] FIG. **24** is a plan view taken along line **24**-**24** FIG. **21**;

[0042] FIG. **25** is an elevational view taken generally along line **25**-**25** of FIG. **24**;

[0043] FIG. **26** is a fragmentary elevational view of a food article gate mechanism;

[0044] FIG. **27** is a near side perspective view of the food article gate mechanism and a food article end removal mechanism in a first operative position;

[0045] FIG. **28** is a near side perspective view of the food article gate mechanism and the food article end removal mechanism in a second operative position;

[0046] FIG. **29** is a far side perspective view of the food article end removal mechanism;

[0047] FIG. **30** is a top far side perspective view of the food article end removal mechanism;

[0048] FIG. **31** is a far side elevation view of the food article gate mechanism and the food article end removal mechanism;

[0049] FIG. **32** is a sectional view taken generally along line **32**-**32** of FIG. **2**;

[0050] FIG. **33** is a sectional view taken generally along line **33**-**33** of FIG. **32**;

[0051] FIG. **33**A is a sectional view taken generally along line **33**A-**33**A of FIG. **33**;

[0052] FIG. **34** is a perspective view of a portion of a slicing blade assembly taken from FIG. **32**;

[0053] FIG. **35** is a sectional view taken generally along line **35**-**35** of FIG. **32**;

[0054] FIG. **36** is a sectional view taken generally along line **36**-**36** of FIG. **32**;

[0055] FIG. **37** is an enlarged fragmentary far side elevational view of the combination of FIG. **1** showing underlying components and features;

[0056] FIG. **38** is an enlarged fragmentary near side elevational view of the combination of FIG. **1** showing underlying components and features;

[0057] FIG. **39** is a plan view of mechanical components within the base section of the combination shown in FIG. **1**;

[0058] FIG. **40** is a bottom perspective view of the lift tray and food article feed apparatus;

[0059] FIG. **41** is a far side perspective view of a front portion of the combination of FIG. **1**;

[0060] FIG. **42** is a near side perspective view of a food article positioning apparatus and food article feed elevation adjusting apparatus;

[0061] FIG. **43** is a near side perspective view of a food article shear support;

[0062] FIG. **44** is a front elevational view of the shear support shown in FIG. **43**;

[0063] FIG. **44**A is a front elevational view of a slicing blade with respect to the shear support;

[0064] FIG. **44**B is a sectional view taken generally along line **44**B-**44**B of FIG. **44**A;

[0065] FIG. **44**C is a sectional view of a jump conveyor drive assembly taken generally along line **44**C-**44**C of FIG. **35**;

[0066] FIG. **45** is a front perspective view of the slicing apparatus with the weighing and classifying conveyor removed;

[0067] FIG. **46** is a near side perspective view of a front portion of the slicing apparatus with a cover removed to view inside components;

[0068] FIG. **46**A is a near side elevational view of the slicing apparatus showing underlying components;

[0069] FIG. **47** is a far side of elevational view of the slicing apparatus showing underlying components;

[0070] FIG. **48** is a front elevational view of the slicing apparatus with the weighing and classifying conveyor removed;

[0071] FIG. **49** is a enlarged near side perspective view of the slicing apparatus;

[0072] FIG. **50** is an enlarged near side perspective view of the slicing apparatus and weighing and classifying conveyor;

[0073] FIG. **51** a is a diagrammatic plan view of a onboard information system according to one aspect of the invention;

[0074] FIG. **52** is a diagrammatic sectional view of the onboard information system taken generally along line **52-52** of FIG. **51**;

[0075] FIG. **53** is a far side perspective view of a laser guard system according to another aspect of the invention;

[0076] FIG. **54** is a near side perspective view of the laser guard system;

[0077] FIG. **55** is a near side elevation view of the weighing and classifying conveyor of FIG. **1** showing underlying components;

[0078] FIG. **56** is a perspective view of a portion of a weighing conveyor with the conveyor belt and rollers removed;

[0079] FIG. **57** is a bottom view of a weighing conveyor belt with frame and rollers removed from the weighing conveyor shown in FIG. **56**;

[0080] FIG. **58** is an enlarged elevational view of a portion of the weighing and classifying conveyor;

[0081] FIG. **59** is a near side elevation view of the weighing and classifying conveyor shown in a clean-up position;

[0082] FIG. **60** is a far side elevational view of the weighing and classifying conveyor;

[0083] FIG. **60**A is an end view of the weighing and classifying conveyor showing underlying components;

[0084] FIG. **60**B is a plan view of the weighing and classifying conveyor;

[0085] FIG. **61** is a schematic representation of the combination of FIG. **1** showing a four food article set up;

[0086] FIG. **62** is a schematic representation of the combination of FIG. **1** showing a three food article set up;

[0087] FIG. **63** is a schematic representation of the combination of FIG. **1** showing a two food article set up;

[0088] FIG. **64** is a progressive schematic diagram showing the loading of four food articles onto a food article lift tray;

[0089] FIG. **65** is a schematic plan view showing the weighing and classifying conveyor configured for four lanes of sliced product;

[0090] FIG. **66** is a schematic plan view showing the weighing and classifying conveyor configured for two lanes of sliced product;

[0091] FIG. **67** is a schematic plan view showing the weighing and classifying conveyor configured for one lane of sliced product;

[0092] FIG. **68** is a schematic plan view showing the weighing and classifying conveyor configured for three lanes of sliced product;

[0093] FIG. **69** (not used)

[0094] FIG. **70** is a schematic rear end view of the food article lift tray showing the tray configured to hold four square cross section food articles;

[0095] FIG. **71** is a schematic rear end view of the food article lift tray showing the tray configured to hold four circular cross section food articles;

[0096] FIG. **72** is a schematic rear end view of the food article lift tray showing the tray configured to hold four large D-shaped food articles;

[0097] FIG. **73** is a schematic and view of the food article lift tray showing the tray configured to hold for large rectangular cross section food articles;

[0098] FIG. **74** is a schematic and view of the food article lift tray showing the tray configured to hold two large prone rectangular food articles;

[0099] FIG. **75** is a schematic elevational view of a round knife blade to be used with the apparatus of the present invention;

[0100] FIG. **76** is a schematic elevational view of an involute-shaped knife blade for slicing large food articles to be used with the apparatus of the present invention;

[0101] FIG. **77** is a schematic elevational view of an involute-shaped knife blade for slicing small food articles to be used with the apparatus the present invention;

[0102] FIG. **78** is a near side elevational view of a laser guard system of the present invention;

[0103] FIG. **79** is a sectional view taken generally along line **79-79** of FIG. **78**;

[0104] FIG. **80** is a plan view of a rear portion of the weighing classifying conveyor;

[0105] FIG. **81** is in elevation view taken generally along line **81-81** of FIG. **80**;

[0106] FIG. **82** is a plan view of the rear portion of the weighing and classifying conveyor of FIG. **80** with deceleration conveyor belts removed for clarity; and

[0107] FIG. **83** is an exploded view of a portion of the deceleration conveyor taken from FIG. **82**.

DESCRIPTION OF THE PREFERRED EMBODIMENTS

[0108] While this invention is susceptible of embodiment in many different forms, there are shown in the drawings, and will be described herein in detail, specific embodiments thereof with the understanding that the present disclosure is to be considered as an exemplification of the principles of the invention and is not intended to limit the invention to the specific embodiments illustrated.

[0109] U.S. Patent Application No. 60/999,961 filed on Oct. 22, 2007 and U.S. Patent Application No. 61/000,202 filed on Oct. 23, 2007 are both herein incorporated by reference.

[0110] FIGS. **1-3** illustrate a high speed slicing apparatus **100** and a weighing and classifying conveyor or output conveyor **102** according to a preferred embodiment of the invention. The slicing apparatus **100** includes a base section **104**, a collapsible frame **105**, an automatic food article loading apparatus **108** that receives food articles **110** to-be-sliced, a food article feed apparatus **120**, a food article feed elevation adjusting apparatus **121**, a food article end removal apparatus **122** (FIG. **27**), a laser safety guard system **123**, a slicing head apparatus **124**, and a slice receiving apparatus **130**. The slicing apparatus also includes a computer display touch screen **131** that is pivotally mounted on and supported by a support **132**.

[0111] The apparatus **100** can also include an onboard information carrier system **135** (FIGS. **51**, **52**) that allows installed parts to be tagged with an information read and write data carrier that can communicate control or maintenance or other information to machine control.

Base Section

[0112] The base section **104** includes a compartment **136** having side walls **138***a*, **138***b*, a bottom wall **140**, and an inclined top wall **142**. The apparatus **100** is supported on four adjustable feet **144**. The compartment **136** has a tapered side profile from back to front wherein the top wall **142** slants

down from back to front. The slanted orientation of the top wall **142** ensures water drainage off the top of the compartment **136**.

[0113] The adjustable feet **144** are shown in FIG. **4**B. The feet include a cylinder **144***a* that is bolted to the bottom wall **140**. The cylinder **144***a* includes an internal threaded bore **144***b* that receives a threaded portion **144***f* of a shaft **144***c* that is mounted on a foot base **144***d*. The shaft **144***c* includes a smooth portion **1**^{44}g of below the threaded portion **144***f*. The smooth portion **144***g* is sealed to the cylinder **144***a* by an o-ring **144***h* carried inside the cylinder **144***a*. This design prevents threads from being exposed which can collect particles and spray water from clean up.

[0114] The compartment **136** includes near side doors **152**, **154**, far side doors **156**, **158** (FIG. **5**), and a rear door **162** that permit access into the compartment or to modules normally within the compartment **136**. The compartment **136** typically affords an enclosure for a computer, motor control equipment, a low voltage supply, and a high voltage supply and other mechanisms as described below. The compartment may also include a pneumatic supply or a hydraulic supply, or both (not shown).

[0115] Base section **104** also includes a debris or scrap conveyor **170** that can be operated to slowly circulate at all times to remove food pieces or other debris that would otherwise collect on top of the top wall **142**, and delivers the debris to a collector bucket **173** located below an output end **170***a* of the conveyor **170**.

[0116] The debris conveyor **170** is shown in FIGS. **45** and **47-50**. The debris conveyor includes a belt **163** that circulates around a rear idle roller **164***a*, a front tensioning roller **164***b* and a drum motor roller **164***c*. The belt circulates against a front idle roller **164***d*. The rollers **164***b* and **164***c* are supported by side plates **165***a*, **165***b*. The side plates **165***a*, **165***b* are fixed to support shafts **166***a*, **166***b* which are attached in cantilever fashion to a far side of the machine by a triangular base plate **167** that is fastened to end nuts **2066***a*, **2066***b* of the tubular shafts **2067***a*, **2067***b* described below. The cantilever mounting allows for the belt to be removed off the rollers at a near side of the machine for cleaning.

[0117] Each of the rollers **164***a*, **164***b*, **164***d* are rotatably carried on a pair of bearings **168** that have a block shaped outer contour **168***a* with a recessed square block shaped region **168***b*. The square block shaped region **168***b* of each bearing **168** is configured to tightly fit within a respective support bracket **169***a*, **169***b*, **169***c* to removably support the respective roller. The outer contour **168***a* captures the respective support bracket **169***a*, **169***b*, **169***c* by sandwiching both sides of the respective bracket **169***a*, **169***b*, **169***c*. The support brackets **169***a* are J-shaped hangers located on the far side and near side of the machine. The support brackets **169***b*, **169***b* are U-shaped brackets mounted to the side plate **165***a* at the far side of the machine and to the front of the compartment **136** at a near side of the machine. The support brackets **169***c*, **169***c* are formed as part of the side plates **165***a*, **165***b* and are open upward.

[0118] A tensioning shaft **171** extends across the conveyor **170** below the roller **164***b*. The shaft **171** is connected to cams **171***a*, **171***b* at positions adjacent to and outside of the side plates **165***a*, **165***b*. At a near side of the machine a handle **171***h* is fixed to the shaft **171**. The cams **171***a*, **171***b* ride against bottoms **168***c* of the rectangular block shaped contours **168***a* of the bearings **168**. Each cam **171***a*, **171***b* has a substantially flat portion **171***c* on its cam surface that underlies the bottoms **168***c* to lock the roller **164***b* in an elevated position to tension the belt **173**.

[0119] To tension the belt **163**, the handle **171***h* is turned from the pointing down position shown in FIG. **46**A to the pointing up position shown in FIG. **46**A, i.e., turned clockwise.

Collapsible Frame and Elevated Housings

[0120] The base section **104** supports the collapsible frame **105** as shown in FIGS. **1-4**A. The collapsible frame **105** includes a foldable support mechanism **174** that supports a food article feed mechanism frame **190**.

[0121] The foldable support mechanism **174** includes a servomotor **175** that drives a gear reducer **176** having a drive shaft **178** that extends out of the gear reducer **176** at opposite ends. The drive shaft **178** is fixed to parallel levers **180***a*, **180***b* which swing out with a turning of the drive shaft **178**. The levers **180***a*, **180***b* are pivotally connected to parallel support columns **182***a*, **182***b* via an axle joint **184**. The columns **182***a*, **182***b* are pivotally connected to the frame **190** which pivotally supports the food article feed apparatus **120** on an axle **192**.

[0122] The food article feed mechanism frame **190** also supports a sweep mechanism housing **194**, a feed conveyor drive housing **196**, and a end disposal housing **198**, all on the far side of the apparatus, shown in FIGS. **5** and **6**. The frame also supports the laser safety guard system **123**.

[0123] For cleaning and maintenance purposes, the collapsible frame **105** is collapsed down by actuating the servomotor **175** and gear reducer **176** to rotate the levers **180***a*, **180***b*, which draws down the columns **182***a*, **182***b* as the frame **190** rotates on the axle **192**. The frame **190**, and all equipment supported thereby, is lowered for more convenient maintenance and cleaning as illustrated in FIG. **4**A. In some cases this eliminates the need for ladders or platforms when servicing the slicing apparatus **100**.

Automatic Food Article Loading Apparatus

[0124] As illustrated in FIG. **7-9**, the automatic food article loading apparatus **108** includes a lift tray assembly **220**, a lift tray positioning apparatus **228** and a food article lateral transfer apparatus **236**. The lift tray assembly **220** receives food articles to-be-sliced. The tray positioning apparatus **228** pivots the tray assembly **220** to be laterally adjacent to, and parallel with, the food article feed apparatus **120**. The food article lateral transfer apparatus **236** moves the food articles from the lift tray assembly **220** onto the food article feed apparatus **120**.

Lift Tray Positioning Apparatus

[0125] FIGS. **7**, **9** and **10** illustrate the food article lift tray assembly **220** includes a frame **290** that supports four movable food article support plates **302**, **304**, **306**, **308**.

[0126] As illustrated in FIG. **8**, the frame **290** is connected by a rear connection **330** and a front connection **332** to a lever **336**. The lever **336** is pivotally connected to a height adjustment bar **340** at a pivot connection **342**. A servomotor **350** drives a gear reducer **351** that has an output shaft **352** that is fixed to a crank arm **360**. The crank arm **360** is pivotally connected to a lift arm **362** at a pivot connection **364**. The lift arm **362** is pivotally connected to the lever **336** at a pivot connection **366**.

[0127] When the servomotor **350** turns the crank arm **360** via the gear reducer **351**, the crank arm **360** is turned counterclockwise in FIG. **8** and the lift arm **362** is elevated to pivot the lever **336** about the pivot connection **342**. This pivots and elevated the rear end of the frame **290** and the food article lift tray assembly **220**.

Lift Tray Assembly

[0128] As illustrated in FIGS. **9** and **10**, the support plates **302**, **304** are separated by a divider **312**. The support plates **304**, **306** are separated by a divider **314**. The support plates **306**,**308** are separated by a divider **316**. The dividers **312**, **314**, **316** are fixed with respect to the frame **290**. The support plates **302**, **304**, **306**, **308** are movable in a perpendicular direction "P" to a length direction of the frame **290** (FIG. **8**). When the frame **290** is horizontally oriented, direction "P" is substantially vertical.

[0129] Each food article support plate **302**, **304**, **306**, **308** is supported by a selective lift mechanism **326** described in FIGS. **8**, **9** and **40**. FIG. **8** discloses the selective lift mechanism **326** for the support plate **302** with the understanding that the selective lift mechanism **326** for each of the food article support plates **302**, **304**, **306**, **308** is identical.

[0130] The support plate **302** is fastened to two parallel lift bars **370**, **372**. Three swing levers **380**, **382**, **384** are pivotally connected to transverse shafts **388**, **400**, **402** of the frame **290**, at base ends **380***a*, **382***a*, **384***a* of the swing levers **380**, **382**, **384**, respectively. Distal ends **380***b*, **382***b*, **384***b* of the swing levers **380**, **382**, **384**, respectively, are pivotally connected to the two parallel lift bars **370**, **372**. A pneumatic cylinder **416** is pivotally connected at a first end **416***a* to a transverse strut **420** of the frame **290**. The cylinder **416**, particularly the cylinder rod **426**, is pivotally connected at a second end **416***b* to the distal end **382***b* of the swing lever **382**.

[0131] Each support plate is provided with an optical sensor or other proximity sensor **302***s*, **304***s*, **306***s*, **308***s* that is signal-connected to machine control. As illustrated in FIGS. **8**A, the sensors **302***s*, **304***s*, **306***s*, **308***s* beam light and receive reflected light through a hole **302***f* in the respective support plate. The proximity sensors **302***s*, **304***s*, **306***s*, **308***s* are configured to sense when a food article is loaded onto the respective support plate **302**, **304**, **306**, **308**.

[0132] Each support plate is also provided with fore and aft stationary hooks **302***g*, **302***k* that engage pins **302***p* spanning between the lift bars **370**, **372** and which hooks are open facing forwardly, and a movable latch **302***m* that engages a pin **302***p* between the lift bars **370**, **372**. The latch **302***m* has a hook that is open rearward and can be disengaged by a finger pushed down through a hole **302***t* in the respective support plate, and the support plate then moved rearwardly, to the rights in FIGS. **8**A and **9**, disengaging the hooks **302***g*, **302***k* to allow the support plate to be withdrawn from the lift tray for cleaning.

[0133] In operation, when the cylinder **416** is actuated pneumatically to elongate, i.e., the rod **426** is moved to the right in FIG. **8**, the swing levers **380**, **382**, **384** will swing clockwise about their base ends **380***a*, **382***a*, **384***a*. The swing lever **382** will swing from direct force by the cylinder **416** and the swing levers **380**, **384** will swing from the force from the parallel lift bars **370**, **372** on the distal ends **380***b*, **384***b*, of the swing levers **380**, **384**.

[0134] Referring to FIG. **10**, when the cylinders are elongated, the support plates **302**, **304**, **306**, **308** are elevated from a lowered position indicated as **302***a*, **304***a*, **306***a*, **308***a* to an elevated position indicated as **302***b*, **304***b*, **306***b*, **308***b*. The plates initially are all elevated. The innermost plate **308** is lowered first to receive a food article of the. Once the proximity sensor **308***s* senses a food article is present, the next plate **306** is lowered to receive the next food article. Once a food article is loaded onto the plate **306** and its presence is sensed by the sensor **306***s*, the next plate **304** is lowered. Once a food article is sensed on the plate **304**, the plate **302** is lowered. This sequence is demonstrated in FIG. **64**. In the case where less than four food articles are to be loaded onto the food article tray, machine control can change the sequencing and response to signals from the switches **302***s*, **304***s*, **306***s*, **308***s*.

[0135] Once the tray is loaded and lifted, the food articles **110** will be moved from the lowered position indicated at **110***a* wherein the food articles are guided in lateral position by the guides **312**, **314**, **316**, to a raised position indicated as **110***b*, wherein the support plates **302**, **304**, **306**, **308** are elevated to be flush with a top of the guides **312**, **314**, **316**.

Food Article Lateral Transfer Apparatus

[0136] The food article lateral transfer apparatus **236** is illustrated in FIGS. **10-13**. The apparatus **236** includes front and rear transfer sweeps **452**, **454** (FIG. **12**). The front and rear transfer sweeps are identically configured so only the front transfer sweep **452** will be described in detail.

[0137] The food article feed apparatus frame **190** includes an upper frame **520** and a lower frame **522**. The upper frame comprises two parallel rails **534**, **536**, four tubular braces **539**, **541**, **542**, **544** and two L- shaped frame extensions **548**, **550** that are laterally spaced from the near side rail **534**. The frame extension **548** is fixed to ends of the tubular braces **539**, **541**, and the frame extension **550** is fixed to ends of the tubular braces **542**, **544**. The lower frame **522** comprises parallel straight rails **522***a*, **522***b* and two transverse struts **523***a*, **523***b* which connect the two straight rails **522***a*, **522***b*. At a front end of the food article feed mechanism frame **190**, the rails **534**, **536**, **522***a*, **522***b* are fastened to a thick support plate **551** that is bolted to the axle **192**.

[0138] The front sweep **452** comprises two vertical frames **556**, **558** that are substantially mirror image identical. Each frame **556**, **558** comprises front journals **560***a*, **560***b* and rear journals **562***a*, **562***b* that slide laterally on tubular braces **539**, **541**, respectively. A multi-lane spacer **570** is arranged below the frames **526**, **558**. The multi-lane spacer **570** comprises side plates **572**, **574** and intermediate rectangular-shaped tubular spacers **576**, **578**, **580**. The side plates **572**, **574** and tubular spacers **576**, **578**, **580** are connected together by front and rear struts **582**, **584**, respectively that connect raised portions of each of the plates **572**, **574** and spacers **576**, **578**, **580**. The struts **582**, **584** hold the plates **572**, **574** and spacers **576**, **578**, **580** in a vertical, spaced-apart and parallel orientation. The relative positioning of the plates **572**, **574** and spacers **576**, **578**, **580** define the desired spacing of four food articles to be carried on the food article feed apparatus to be sliced simultaneously by the slicing head apparatus.

[0139] The multi-lane spacer **570** is hung from the frames **556**, **558** by links **584**, **586**, **588**, **590**. The front links **584**, **588** are pivotally connected to the respective frames **556**, **558** and pivotally connected to the side plates **572**, **574** of the multi-lane spacer **570**. The rear links **586**, **590** are pivotally connected to the side plates **572**, **574** and connected to slide bearings **600**, **602** that each slidably receives a square cross section drive rod **606** in a fashion such that turning of the

square cross section drive rod **606** causes a turning of the rear links **586**, **590**. Turning of the rear links **586**, **590** forcibly swings the rear links **586**,**590**, which swings the multi-lane spacer **570** rearward and upward. The square cross section drive rod **606** slides through the slide bearings **600**, **602** during lateral sliding of the sweep **452**. The square cross section drive rod **606** has a round end that is journaled for rotation in a bearing **610** carried by the frame extension **550**.

[0140] FIG. **11** illustrates the sweep **452** in two positions. In a first position marked **452***a*, the sweep is above four food articles **110** that are positioned on the support plates **302**, **304**, **306**, **308**, with the support plates in a raised position flush with the dividers **312**, **314**, **316**. From this position, the sweep **452** is moved to the right by a sweep transfer device **630** shown in FIG. **13**. The multi-lane spacer **470** is positioned to be above the conveyor **530**. The top surface of the conveyor **530** is flush with the top surface of the support plates **302**, **304**, **306**, **308** so a smooth sliding transfer is enabled. The sweep **452** moves laterally with the journals **560***a*, **560***b*; **562***a*, **562***b* sliding along the tubular braces **539**, **541**.

[0141] FIG. **13** illustrates the transfer device **630** comprises a servomotor **636** that turns the operating mechanism of a screw drive **638** via a belt **642**. The screw drive **638** is mounted within a tubular cover **540**. A hollow rod **646** is fixed on an end thereof to the frame **556** and penetrates the cover **540**. The rod **646** has internal threads, such as provided by a threaded nut or screw follower welded to the rod, and the screw drive **638** has an internal rod (not shown) with external threads which engage the internal threads. Thus, turning of the rod of the screw drive **638** in a pre-defined direction moves the nut along the rod and either extends or retracts the rod **646** from or into the cover **540**.

[0142] To reload the conveyor **530** with four new food articles **110**, the multi-lane spacer **470** must be raised so as not to interfere with the food articles being sliced on the conveyor **530**, and then moved outward (to the left in FIG. **11**). To raise the multi-lane spacer **470**, the square cross section rod **606** is turned, to swing the links **586**, **590**. A turning mechanism **720** is shown in FIG. **13** associated with identical sweep **454**, with the understanding that an identical mechanism **720** would be used for the sweep **452**. The turning mechanism **720** includes a linear actuator servomotor **726** pivotally fastened at a base end **726***a* to the frame **520** and having an extendable rod **730** pivotally connected to a lever **736**. At an opposite end the lever **736** is connected to the square cross section rod **606**. The rod **730** is connected to the lever **736** at a location eccentric to a centerline of the square cross section rod **606**. The servomotor **726** turns an internal threaded rod or like device to extend or retract the rod **730** and thus turn the lever **736** and the square cross section rod **606** in either direction, clockwise or counterclockwise about an axis of the rod **606**. Thus, when the rod **730** is extended, the rod **606** is turned counterclockwise (as viewed in FIG. **12**) and the multi-lane spacer **470** is raised.

[0143] The servomotor **636** then turns the screw drive **638** to extend the rod **646** to move the sweep **452** to the left position shown in FIG. **11** but raised above the lift tray **220**. The linear actuator servomotor **726** then retracts the rod **730** to reverse rotate the square cross section rod **606** to lower the multi--lane spacer **470** to the position indicated as **452***a* in FIG. **11**. At this position, four new food articles **110** can be raised by the supports **302**, **3204**, **306**, **308** to take the four lane positions between the side plates **570**, **574** and the spacers **576**, **578**, **580**.

[0144] As the food articles **110** are transferred from the support plates **302**, **304**, **306**, **308** a sensor **770** determines a location of the end **110***d* of each food article **110**. According to the preferred embodiment, the sensor **770** comprises a laser distance sensor that uses a beam **770***a* to determine the distance between the sensor **770** and the back end **110***d* of each food article as the food articles pass by during transfer. This distance is recorded in the machine control and associated with each food article **110**, particularly, associated with the food article **110** and the lane to be occupied by each food article during slicing. The machine control has instructions for calculating a length of each food article based on the distance value provided the sensor.

Food Article Feed Apparatus

[0145] The lower conveyor **530** of the food article feed apparatus **120** is shown in FIG. **14**. The conveyor **530** includes four independently driven endless conveyor belts **802**, **804**, **806**, **808**. Each belt **802**, **804**, **806**, **808** is identically driven so only the drive for the belt **802** will be described. A machine control "C" (FIG. **51**) has instructions for ending machine slicing of all food articles on the food article feed apparatus when the shortest food article is sliced to a minimum length. The minimum length may be predefined, may be a food article length below which the machine can no longer slice a food article, or may be a food article length below which continued slicing will produce unacceptable scrap slices cause by slicing a food article end.

[0146] The belt **802** is wrapped around a toothed front drive roller or pulley **812** and a back idler roller or pulley **816**. The belt **802** preferably has teeth that engage teeth of the two rollers **812**, **816**. Each drive roller **812** includes a toothed outer diameter **812***a* and a toothed, recessed diameter **812***b*. An endless drive belt **820** having a smaller width than the belt **802** wraps around the recessed diameter **812***b*. As shown in FIG. **15**A, the smaller endless drive belt **820** operates within the larger operating path of the larger endless conveyor belt **802**. The drive belt **820** also wraps around a drive roller **824** that is fixed to a drive shaft **828**. The drive shaft **828** extends transversely to the belt **802** and is journaled for rotation within a bearing **830** mounted to a near side frame member **836**.

[0147] The drive shaft **828** penetrates a far side frame member **838** and extends to a bearing **843**, coupled to a gear reducer **842** mounted to a support frame **854**. The gear reducer **842** is coupled to a servomotor **850** that is mounted to the support frame **854**. The drive belt **820** circulates within the perimeter defined by the endless belt **802**.

[0148] The servomotor **850** drives the drive shaft **828** which turns the roller **824** which circulates the belt **820** which rotates the roller **812** which circulates the belt **802**.

[0149] A shown in FIGS. **14**, **15**, **15**A, **19** and **20** the belt **802** is supported along its length by flat rails **860**, **862** which underlie lateral edges of the belt **802**. The rails **860**, **862** (as well as rails for the belts **804**, **806**, **808**) are supported by struts **870**, **872**,**874** and **876** which connect the near frame member **836** to the far frame member **838**.

[0150] Each idler roller **816** is provided with a pneumatic belt tension adjustment mechanism **882** that is braced from a transverse bar **886** that is fastened between the frame members **836**, **838**. The pneumatic belt tensioning adjustment mechanism **882** has an internal piston which is acted upon by pneumatic air pressure to exert a constant force on tension

rods **882***a* which exert a force on frame **883** of each idler roller **816** outwardly away from the transverse bar **886** to maintain tension on the belts.

[0151] FIG. **15-20** illustrate a gripper **894** used in cooperation with the belt **802**. The gripper **894** is mounted to a top run of the belt **802** and is translated along the food article path by the belt **802**. The gripper **894** is clamped to a belt joint block **896** by a screw **897**. The block **896** comprises an upper member **899** and a lower member **900** that include teeth **899***a*, **900***a* on members **899**, **900** that engage the upper and lower teeth of the belt **802** once the members **899**, **900** are clamped together to splice the free ends **802***e*, **802***f* of the belt **802**. For clamping, fasteners **902**, **904** are provided which are inserted from below the member **900** through plain holes in the member **900** and tightly threaded into threaded holes **902***a*, **904***a* in the member **899**.

[0152] The gripper **894** travels from the retracted home position shown in FIGS. **16** and **19**, to the advanced, forward position, shown in FIGS. **15** and **20**. The lower member **900** is sized to slide between a lateral clearance **906** located between rails **860**, **862** (FIG. **14**).

[0153] The gripper **894** is pneumatically actuated via pressurized air hoses **912**, **913** (FIG. **16**). The air hoses **912**, **913** are coupled to include free hanging supply loops **914**, **915** that includes a dead weight pulley **916** to prevent inadvertent tangling of the hoses with other equipment. Tube guides can also be provided on the back of the frame member **190** to guide the air hoses vertically to prevent tangling of the hoses with other equipment.

[0154] The gripper **894** includes an air cylinder **926** having a piston **930** therein. Air connectors **932**, **936** communicate air to/from opposite sides of the piston to control movement of the piston in either direction. A shown in FIG. **18**, movement of a piston rod **938** connected to the piston **930** moves an annular rack **942** that is engaged to four pinion gears **944** of four claws **946**. Movement of the annular rack **942** away from the cylinder **926** opens the claws **946**, and movement of the annular rack **942** toward the cylinder **926** closes claws **946**.

Upper Conveyor

[0155] As illustrated in FIG. **21**, at a front end of the food article feed apparatus **120**, above the lower feed conveyor **530** are four upper feed conveyors **992**, **994**, **996**, **998** having endless belts **1002**, **1004**, **1006**, **1008**, respectively. The endless belts **1002**, **1004**, **1006**, **1008** are independently driven and are directly opposed to the lower conveyor belts **802**, **804**, **806**, **808**, respectively. The respective belt pairs, such as the upper belt **1002** and the lower belt **802** are circulated in opposite directions to drive a food article clamped there between into the slicing plane.

[0156] The near side upper conveyors **992**, **994** are configured in a mirror image fashion, across a longitudinal vertical center plane of the food article feed apparatus **120**, to the far side two conveyors **996**, **998** so that only the near side two conveyors **992**, **994** need be described.

[0157] FIG. **21** shows the conveyor **992** has a drive roller **1010** having a central hub **1012** with a center bore **1014**. The drive roller **1010** has tubular stub axles **1016**, **1018** extending from opposite ends of the central hub **1012**. The tubular stub axles **1016**, **1018** are journaled for rotation by bearings **1020**, **1022** that are fastened to carrier blocks **1023***a*.

[0158] The conveyor **994** includes a drive roller **1038** having a central hub **1042** with a bore **1044**. The drive roller **1038** has tubular stub axles **1046** and **1048** extending from opposite ends of the central hub **1042**. The tubular stub axles **1046**, **1040** are journaled by bearings **1050**, **1052** respectively that are attached to carrier blocks **1023***b*.

[0159] A motor housing **1054**, including a baseplate **1054***b* and a cover **1054***a*, is mounted to an end of an upper conveyor support bar **1056**. The base plate **1054***b* of each side of the machine is fastened to a linear actuator, such as a pneumatic cylinder **1055***a* and **1055***b* respectively. The cylinders **1055***a*, **1055***b* are connected together by the support bar **1056**. Each cylinder slides on a fixed vertical rod **1057***a*, **1057***b* respectively. Thus, controlled air to the cylinders **1055***a*, **1055***b* can be used to uniformly raise or lower the near side housing **1054** and the far side housing **1054** uniformly.

[0160] A spindle **1060** extends through the motor housing **1054**, through a sleeve **1064**, through a coupling **1065**, through the tubular stub axle **1016**, through the central bore **1014**, through the tubular stub axle **1018**, through the tubular stub axle **1046**, and partly into the bore **1044**. The spindle **1060** has a hexagonal cross-section base region **1070**, a round cross-section intermediate region **1072**, and a hexagonal cross-section distal region **1074**. The hexagonal cross-section base region **1070** is locked for rotation with a surrounding sleeve **1071** to rotate therewith.

[0161] The intermediate region **1072** is sized to pass through the sleeve **1064**, through the tubular stub axle **1016**, through the central bore **1014**, and through the tubular stub axle **1018** to be freely rotatable therein. The distal region **1074** is configured to closely fit into a hexagonal shaped central channel **1078** of the tubular stub axle **1046** to be rotationally fixed with the tubular stub axle **1046** and the drive roller **1038**.

[0162] The sleeve **1064** includes a hexagonal perimeter end **1064***a* that engages a hexagonal opening **1065***a* of the coupling **1065**. The coupling **1065** includes an opposite hexagonal opening **1065***a* that engages a hexagonal perimeter end **1016***a* of the tubular stub axle **1016**. The coupling **1065** couples the sleeve **1064** and the stub axle **1016** for mutual rotation such that the sleeve **1064** and the drive roller **1010** are locked for rotation together, i.e., turning of the sleeve **1064** turns the drive roller **1010**.

[0163] Within the motor housing **1054** are two servomotors **1090**, **1092** mounted to the housing by fasteners. The servomotors each have a vertically oriented output shaft **1096** that rotates about a vertical axis connected to a worm gear **1098** that is enmesh with and drives a drive gear **1100** that rotates about a horizontal axis. The drive gear **1100** drives the sleeve **1071** that drives the region **1070** of the spindle to rotate the spindle **1060**. Rotation of the spindle **1060** rotates the drive roller **1038** via the hexagonal cross-section distal end region **1074**.

[0164] Adjacent to the servomotor **1090** is the servomotor **1092**. The servomotor **1092** is configured substantially identically with the servomotor **1090** except the worm gear **1098**, as shown in schematic form in FIGS. **22** and **23**, of the servomotor **1092** drives a drive gear **1100** that drives the sleeve **1064** to rotate. The sleeve **1064** rotates independently of the round cross-section region **1072** of the spindle **1060**, and drives a stub axle **1016** to rotate, which rotates the drive roller **1010**.

[0165] The sleeves **1071** and **1064** are journaled for rotation by bearings **1106**, **1108**; and **1110**, **1112**, respectively. The drive gears **1100**, **1100** are fastened to the respective sleeve **1071**, **1064** using fasteners **1116**.

[0166] The housings **1054**, via servomotors **1090**, **1092**, on both sides of the conveyors **992**, **994**, **996**, **998** support the

conveyors **992**, **994**, **996**, **998**. By using the cylinders **1055***a*, **1055***b* to raise and lower the housings **1054**, the conveyors can be raised or lowered to match a product size.

[0167] Each conveyor belt **1002**, **1004**, **1006**, **1008** is wrapped around the respective drive roller and a front idle rollers **1134**, **1135**, **1136**, **1137** that is supported by respective side frames **1131**, **1132**. The front rollers **1134**, **1135**, **1136**, **1137** are vertically movable independently by pivoting of the conveyor about an axis of the respective drive roller.

[0168] Also, as shown in FIGS. **24** and **25**, the underside of the support bar **1056** carries pneumatic cylinders **1130**. Each pneumatic cylinder **1130** extends a piston rod to press down on side frames **1131**, **1132** of each conveyor to pivots down a front end of each conveyor **992**, **994**, **996**, **998** to lightly press down on a top of the product below. The inclination of each conveyor **992**, **994**, **996**, **998** is set by upward pressure from the product and downward pressure from the pneumatic cylinders **1130**.

Food Article Gate

[0169] As illustrated in FIG. **26**, at a front end of the food article feed apparatus **120** a food article gate **1140** is movably positioned to provide a stop for food articles that are loaded onto the conveyor **530**. In order to commence slicing of the food articles, the food article gate **1140** must be displaced. FIGS. **26** and **27** show the gate **1140** in a lowered position marked **1140***a*. FIGS. **26** and **28** show the gate **1140** in a raised position marked **1140***b*. Guide plates **1146***a*, **1146***b* are provided fixedly attached to the frame **190**, one on each lateral side of the gate **1140**. Each guide plate includes a slot **1148** that has a vertical portion **1148***a* and a lower, inclined portion **1148***b*. Two rollers **1150** are connected to a front side of the gate **1140**, one sliding within each slot **1148** of the two guide plates **1146***a*, **1146***b* respectively. An axle **1154** is journaled at opposite ends by a frame portion **1158** and a back wall **1160** of the sweep mechanism housing **194**, using bearings. Two levers **1164***a*, **1164***b* are fixedly connected to the axle **1154** such as to swing when the axle **1154** is rotated about its axis. Each lever **1164***a*, **1164***b* is pivotally connected to a lug **1166***a*, **1166***b*, respectively. The lugs **1166***a*, **1166***b* are welded to a backside of the gate **1140**.

[0170] Within the sweep mechanism housing **194** a linear actuator such as a pneumatic cylinder **1170** is pivotally connected at a base end **1170***a* and pivotally connected at a rod end **1170***b* to a turning lever **1172**. The turning lever **1172** is fixedly connected to the axle **1154**. Thus, when the pneumatic cylinder **1170** retracts the rod end **1170***b* toward the cylinder **1170** the turning lever **1172** will be in the position marked **1172***b* and the gate will be in the elevated position marked **1140***b*. When the pneumatic cylinder **1170** extends the rod end **1170***b* away from the cylinder **1170**, the turning lever **1172** will be in the position marked **1172***a* and the gate will be in the lowered position marked **1140***a*.

[0171] Advantageously, the gate **1140** follows the track **1148** in an outward and upward motion which generally releases the food articles in a forward direction toward the slicing plane for slicing.

Food Article End Disposal

[0172] FIGS. **10**, **11** and **27-31** illustrate the food article end removal apparatus **122**. The apparatus **122** comprises a prone U-shaped transport **2000**. The transport **2000** is carried by near side bearings **2004** and far side bearings **2006**. The bearings **2004**, **2006** slide along parallel rails **2008**, **2010** that are fixedly supported by the frame **190**. The transport **2000** can be moved from a position directly above the conveyor belts **802**, **804**, **806**, **808** as shown in FIG. **27** to a position extended outside of the far side of the slicing apparatus **100** as shown in FIG. **28**. A servomotor **2016** located within the sweep mechanism housing **194** drives a shaft **2020** in rotation. The shaft turns a drive pulley **2024** which turns a belt **2026** which turns a driven pulley **2028** which drives a further pulley **2030** via a common shaft **2032**. A drive belts **2034** is wrapped around the further pulley **2030** and an idler pulley **2036**, the idler pulley **2036** being journaled on an idler shaft **2038**. A fixing block **2040** fixes a bottom run of the drive belt **2034** to the bearing **2006**. Thus, when the servomotor **2016** rotates the shaft **2020**, the belt **2026** is circulated by the pulley **2024** which circulates the drive belt **2034** via the pulley **2030** and the transport **2000** is moved by the fixing block **2040**.

[0173] FIG. **27** shows a movable paddle **2046** which can be inserted into the open cross-sectional space of the transport **2000**. The paddle **2046** is connected by an elongated handle **2048** that is pivotally connected to a front lever **2052** and to a rear lever **2056**. The front and rear levers **2052**, **2056** are pivotally connected to the far side frame member **838** of the food article feed conveyor **530** at bearings **2052***a*, **2056***a* respectively. The rear lever **2056** extends below the bearing **2056***a* and is pivotally connected to a pneumatic cylinder **2064** at a rod end **2064***a*. The pneumatic cylinder **2064** is pivotally connected to the frame **190** at an opposite end **2064***b* within the food article feed drive housing **196**. Thus, extension of the rod end **2064***a* away from the cylinder **2064** will retract the paddle **2046** as shown in FIG. **28**, and retraction of the rod end **2064***a* toward the cylinder **2064** will cause the paddle **2046** to extend into the transport **2000** as shown in FIG. **27**.

[0174] In operation, after the food articles have been sliced completely leaving only ends gripped by the grippers, the grippers **894** are retracted toward the home position of the grippers but are halted temporarily a short distance along the food article path providing a clearance for the transport **2000**. The transport **2000** is driven by the servomotor **2016** from an extended-outward position as shown in FIGS. **10** and **28** to the inward position as shown in FIG. **27** with the paddle in the position shown in FIG. **27**. Any end portions that are on the transport **200** will be pushed off the transport **200** by the paddle **2046** during travel of the transport **200** onto the conveyor **530**. The grippers **894** then would release the ends which will fall or slide by gravity onto the transport **2000**. The grippers then continue up the food article feed paths to the gripper home position at the top of the feed mechanism. Before new food articles are loaded onto the feed mechanism **120**, the paddle **2046** is withdrawn to the position shown in FIG. **28** and then the transport **2000** is moved to the position shown in FIG. **28** carrying the end portions out of the food article feed mechanism and away from the conveyor **530**. The process is repeated after new food articles are sliced and grippers and ends proceed up the food article feed paths. The grippers are again halted at a position part way up the feed paths, the paddle is moved to the position shown in FIG. **27** and the transport **2000** is moved back onto the conveyor **530**. The paddle **2046** displaces the end portions off of the transport **2000** and into a bucket or other disposal mechanism, as the transport moves over the conveyor.

[0175] On a far side of the machine **100**, the transport **2000** is covered by a cover and chute arrangement **198** shown in

operating position in FIGS. **6** and **10** and pivoted about hinges **198***a* to be in a raised maintenance position shown in FIG. **29**.

Slicing Head Section

[0176] FIGS. **2**, **3**, **5**, **6** and **32-37** illustrate components and features of the slicing head section **124**. The section **124** includes a housing **2060** having a thick top wall **2061** (FIG. **33**), thick side walls **2062***a*, **2062***b*, an enclosing front skin **2063***a*, a top skin **2063***b* and a bottom wall **2064**. The front skin **2063***a* can include a window **2063***c* closed by a cover **2063***d* that provides access to the motor within the housing **2060**.

[0177] The side walls **2062***a*, **2062***b* are substantially similar. Each sidewall includes an upper window **2065***a* and a lower window **2065***b*. The upper windows are closed by covers **2065***c*. The side walls **2062***a*, **2062***b* extend outside of and down below the top wall **142** of the compartment **136** and are fastened through the compartment **136** by tubular braces **2067***a*, **2067***b*, **2067***c* traversing inside the compartment **136**, welded to the sidewalls **138***a*, **138***b* and nuts **2066***a*, **2066***b*, **2066***c* on each side of the compartment tightened onto threaded rods (not visible) that are inserted through the tubular braces **2067***a*, **2067***b*, **2067***c*.

[0178] The thick top wall **2061** and thick side walls **2062***a*, **2062***b* form a rigid frame for the slicing head section **124**.

[0179] A slicing head cover **2070** is provided to cover the moving slicing blade and openings near to the slicing blade during operation.

[0180] The slicing head cover **2070** is pivotally connected to the side walls **2062***a*, **2062***b* by a pair of articulated arms **2071** a, **2071***b* that are mirror image identical across a longitudinal, vertical center plane of the slicing head section **124**. The slicing head cover **2070** is hinged to the top skin **2063***b* by hinges **2072***a*, **2072***b*.

[0181] The slicing head cover **2070** can be pivoted upwardly by the arms **2071***a*, **2071***b* moving from a folded state or closed state as shown in FIG. **2** to a substantially unfolded state or open state as shown progressively in FIG. **3**, wherein the slicing head cover moves from position **2070***a* to **2070***b* to **2070***c*.

[0182] FIGS. **32** and **33** illustrate a mechanism **2072** used to move the arms **2071***a*, **2071***b* to raise and lower the slicing head cover **2070**. The mechanism comprises a vertically oriented servomotor **2073** having an output shaft **2073***a* connected to a worm gear **2073***b*. The worm gear **2073***b* is enmesh with a hollow follower gear **2074***a* fixedly mounted on a transverse shaft **2074***b*. The shaft **2074***b* extends across the housing **2060** and exits side walls **2062***a*, **2062***b* through bearings **2075***a*, **2075***b*.

[0183] The shaft **2074***b* is fixed to pivot levers **2076***a*, **2076***b* that are respectively pivotally connected to swing levers **2077***a*, **2077***b* of the respective arms **2071***a*, **2071***b*. Ends of the swing levers **2077***a*, **2077***b* are pivotally connected to the slicing head cover **2070**.

[0184] When the servomotor is turned in the select direction to open the slicing head cover **2070**, the worm gear **2073***b* turns about its axis which turns the shaft **2074***b* about its axis. Turning of the shaft **2074***b* counterclockwise as viewed in FIGS. **2** and **3** pivots the lever arms **2076***a*, **2076***b* clockwise which thrusts the swing arms **2077***a*, **2077***b* upward to lift up the slicing head cover **2070**.

[0185] The circle **2080** in FIG. **32** schematically illustrates the cutting path within a cutting plane **2081** of an involute-shaped blade **2082** (shown in FIG. **33**). A rotary hub **2084** has a fixed toothed annular surface **2084***a* that is rotated by a toothed belt **2088** that is circulated by a drive pulley **2094** that is driven by a servomotor **2098**. The rotary hub **2084** is carried by a stationary hub **2130**. The stationary hub **2130** includes a flange **2131** that is fastened to the thick top wall **2061**.

[0186] A linear servo actuator **2102** has a trunion mount **2106** that is fastened to the top wall **2061** of the housing **2060**. The cylinder has an extendable rod **2110** that is connected to a vertical link **2114** that is pivotally connected at its opposite ends to base ends of parallel pivot bars **2116**, **2118**. For clarity, the lower pivot bar **2118** is not shown in FIG. **33**. The pivot bars **2116**, **2118** are both pivotally and slidably attached at distal ends about an axis **2121** to opposite sides of a bearing hub **2120** that is arranged for sliding movement only in the axial direction "X" (FIG. **33**), within the stationary hub **2130**. The pivot bars **2116**, **2118** are also both pivotally attached at an intermediate location about a pivot axis **2128** to a flange **2126** formed on the stationary hub **2130**. The pivot axis **2128** is located between the base ends and distal ends of the pivot bars **2116**, **2118**.

[0187] As shown in FIGS. **33**A and **34**, since the stationary hub surrounds the bearing hub **2120**, enlarged or oblong holes **2130***c* are provided through the stationary hub **2130** to allow a pair of pins **2130***d*, each having a smaller diameter than the respective oblong or enlarged hole **2130***c* to pass through the stationary hub **2130** on opposite sides, to be fixed to the bearing hub **2120**. The oblong or enlarged holes **2130***c* allow for some clearance for the sliding movement of the bearing hub **2120** with respect to the stationary hub **2130**.

[0188] Rectangular sliding lugs **2116***t*, **2118***t* are fit within elongated rectangular holes **2116***v*, **2118***v* in the pivot bars **2116**, **2118**. The lugs **2116***t*, **2118***t* and holes **2116***v*, **2118***v* allow sliding movement of the lugs **2116***t*, **2118***t* in the direction "T" during pivoting of the pivot bars **116**, **2118**. The lugs **2116***t*, **2118***t* are rotatably fastened to the pins **2130***d* and cover with caps **2130***f* wherein oil or grease can be filled in under the caps.

[0189] The pivot axis **2128** is provided by a pivot pin **2128***a*, with threaded end holes, that locks the pivot bars **1116**, **2118** together by bolt caps **2128***b*.

[0190] A blade drive shaft **2132** is splined to the rotary hub **2084** by a gear **2136** engaged to a plurality of inner teeth **2140** on the inside of the rotary hub **2084**. Thus, the rotary hub **2084** is fixed for rotation with the blade drive shaft **2132**. The rotary drive shaft **2132** is journaled for rotation by base tapered roller bearings or thrust bearings **2144** and distal tapered roller bearings or thrust bearings **2148** in order for the rotary drive shaft **2132** to rotate with respect to the non-rotating bearing hub **2120**.

[0191] The blade drive shaft **2132** includes a lower counterweight mount **2133** that permits a lower counterweight **2135***a* to be fastened directly to the blade drive shaft **2132** using fasteners **2134** threaded into threaded holes provided in the blade drive shaft **2132**. Upper counterweight **2135***b* for balancing the involute-shaped blade **2082** is fastened to the involute-shaped blade **2082** using fasteners **2136**.

[0192] When the rod **2110** is extended with respect to the actuator **2102**, the pivot bars **2116**, **2118** rotate counterclockwise (as viewed in FIG. **33**) about the pivot axis **2128** and thrust the pivot axis **2121** in a direction away from the cutting plane **2081** (down in FIG. **33**). The bearing block **2120** slides within the stationary hub **2130**. The cutting blade **2082** becomes offset by a small amount away from the cutting plane **2081**.

[0193] When the actuator **2102** reverses the direction of the rod **2110**, i.e., the rod is retracted, the pivot bars **2116**, **2118** rotate clockwise (as viewed in FIG. **33**) about the pivot axis **2128** and the pivot bars **1116**, **2118** thrust the axis **2121** in a direction toward the cutting plane **2081**. The bearing block **2120** slides toward the cutting plane **2081** (up in FIG. **33**), and the blade **2082** returns to being coplanar with the cutting plane **2081**.

[0194] A disc **2160** is fastened to the rotary hub **2084** with fasteners to rotate therewith. As shown in FIGS. **33**A and **34**, a pair of disc brakes **2162**, **2164** are provided having calipers **2162***a*, **2164***a*, respectively. The calipers **2162***a*, **2164***a* are fixedly mounted to a mounting bar **2166** and fit over opposite sides of the disc **2160**. The mounting bar **2166** is mounted to the stationary hub **2130** by fasteners **2168** and tubular spacers **2170**. Each disc brake **2162**, **2164** includes movable, opposing friction pads within the calipers **2162***a*, **2164***a* (not seen) that face opposite sides of the disc **2160** and are subject to air pressure within the calipers **2162***a*, **2164***a* to squeeze the rotating disc **2160** and bring the rotating disc **2160** and the rotary hub **2084**, the drive shaft **2132** and the blade **2082** to a rapid and safe stop.

Food Article Feed Elevation Adjusting Apparatus

[0195] It is an advantage of the or present invention that the height of the conveyor **530** at the front and back ends thereof can be precisely set depending on the product size to be cut. Accordingly, a food article feed elevation adjusting apparatus **3000** is provided and illustrated in FIGS. **37-39**. The adjusting apparatus **3000** also includes the foldable support mechanism **174** previously described in the control thereof. The adjusting apparatus **3000** includes a servomotor **3002** that is mounted within the enclosure **136** by a bracket **3006** that is secured to the transverse strut **2067***c*. The servomotor **3002** includes an output shaft **3005** that drives an output pulley **3008**. A toothed belt **3010** surrounds the output pulley **3008** and two adjustment pulleys **3016**, **3018**. A tension pulley **3020** maintains a constant tension on the belt **3010**, and causes the belt to wrap more teeth on each of the adjustment pulleys **3016**, **3018**. Each adjustment pulley **3016**, **3018** is connected to an input shaft **3030***a*, **3032***a* of a fine movement screw adjusting cylinder or actuator **3030**, **3032**, respectively. Thus, when the servomotor **3002** turns, the pulleys **3008**, **3016**, **3018**, **3020** causes fine, precise movement of the output end **3030***b*, **3032***b* of the adjusting cylinders **3030**, **3032**. The adjusting cylinders **3030**, **3032** are set at an angle that is substantially perpendicular to the conveying surface of the conveyor **530**, as shown in FIG. **27**, and is substantially parallel to the cutting plane so that any adjusted change in elevation by the adjusting cylinders **3030**, **3032**, with a corresponding change in elevation of the foldable support mechanism **174** through a controlled movement of a servomotor **175**, will not change the angle of slice through food articles carried on the conveyor **530**.

[0196] FIG. **40** shows the adjusting cylinders **3030**, **3032** extending above the top wall **142** of the compartment. The cylinders **3030**, **3032** are fixed with respect to the top wall **142** but the output ends **3030***b*, **3032***b* can be raised and lowered by the servomotor **3002**. The output ends **3030***b*, **3032***b* are rotatably connected to the axle **192** by rings **3030***c*, **3032***c* that are connected to the output end **3030***b*, **3032***b*, and encircle the axle **192** but allow free rotation of the axle **192** within the rings **3030***c*, **3032***c*.

[0197] FIG. **41** illustrates the axle **192** journaled by a bearing **3040** that is mounted to a slide block **3041** that is slidably carried by the side wall **2062***b* along a slot **3042** that is elongated along the same angle as the adjustment direction of the cylinders **3030**, **3032**. FIG. **42** shows the axle **192** journaled by a bearing **3046** that is mounted to a slide block **3047** that is slidably carried by the side wall **2062***a* along a slot **3048** that is elongated along the same angle as the adjustment direction of the cylinders **3030**, **3032**.

[0198] Also, for adjusting the elevation of the food article lift tray positioning apparatus, the pivot point **342** (FIG. **5**) is also guided by a bearing **3049** sidable within a slot **3050** in the side wall **2062***a* (FIG. **42** and **50**), the slots **3048** and **3050** being parallel in elongation.

Shear Support

[0199] A shear support **3060** is shown in FIGS. **43** and **44**. The shear support guides the food articles being sliced into the slicing plane wherein the rotating slicing blade is arranged to come within a close tolerance of the shear support. The shear support illustrated has four rectangular openings, although any number of openings or size and shape of openings is encompassed by the invention. The present embodiment of the invention could accommodate four or less openings of variable shapes and sizes. The shear support **3060** fits down into a U-shaped frame **3068** that is fastened by upper bracket **3069***a* and lower bracket **3069***b* at each side of the frame **3068** to the front plate **551** of the food article feed frame **190** as shown in FIGS. **44**A and **44**B.

[0200] The upright members **3070***a*, **3070***b* of the frame **3068** have a plurality of plain holes **3072** therethrough. Once the shear support **3060** is set down into the frame **3068** a top cross bar **3076** (shown in FIG. **44**, not installed in FIG. **43**) is placed over the shear support between the upright members and bolted to the upright members using a pair of plain holes **3072** aligned across the frame **3068**, depending on the height of the shear support **3060**, that allow the top cross bar **3076** to fit down snugly on the shear support **3060**, and threaded holes **3078** provided into the cross bar, to complete a rectangular frame that surrounds the shear support on all four sides.

[0201] The shear support **3060** is preferably composed of non-metallic material.

Slice Receiving Apparatus

[0202] The slice delivery apparatus **130** comprises a slice accumulation conveyor or jump conveyor **3064**.

[0203] The conveyor **3064** is shown in FIGS. **37** and **55**. The conveyor **3064** is carried on a transverse bar **3100** that is supported at opposite ends by a raising apparatus **3106**. The raising apparatus **3106** is shown in FIGS. **37**, **39** and **46**. The raising apparatus **3106** comprises a servomotor **3110** that drives a gearbox **3111** that drives a sprocket **3114** that drives a belt (or multiple belt elements) **3118**. The belt is wrapped around a driven sprocket **3120** that is fixed on a shaft **3124**. The shaft **3124** is journaled by bearings **3126**, **3128** and penetrates through the side walls **138***a*, **138***b* of the compartment **136** and into vertically arranged rack and pinion assemblies **3130**, **3132** located outside the side skins across the compartment **136**. The shaft **3124** is fixed to a pinion **3136** within each rack and pinion assembly, wherein the pinion is enmesh with teeth on a vertical rack **3138**. When the pinions **3136** are rotated by the shaft **3124** the racks **3138** are raised or

lowered an equal amount. The transverse bar **3100** is supported at its opposite ends by one of the racks **3138**.

[0204] In operation, as the blade cuts slices from the food articles **110**, the slices accumulate on the conveyor **3064** in a straight stack or a shingled drafts or other style presentation as is known. As the stack accumulates the raising mechanism **3106** lowers the conveyor so that each slice falls an equal distance onto the stack. This helps form a neat stack.

[0205] A jump conveyor drive **3141** is shown in FIGS. **32**, **33**, **35**, **36** and **44**C. A servomotor **3142** drives a gearbox **3144** that has an output shaft **3146** that drives a pulley **3148**. The pulley **3148** drives a belt **3150** that rotates a driven pulley **3152**. The driven pulley **3152** drives an axially aligned gear **3156** that drives a series of counter-rotating, enmeshed gears **3158**, **3160**, **3162**. The last gear **3162** drives an axially arranged gear **3166** that is enmeshed with a counter-rotating gear **3168**. The counter-rotating gear **3168** is enmeshing with a final gear **3170** that drives a drive roller **3172** of the conveyor **3064**. This arrangement allows relative axial pivoting between the pulley/gear **3152**, **3156** and gear pairs **3162**, **3166** to adjust the length of the drive **3141** by "folding" the drive to adapt to changing elevations of the jump conveyor **3064**.

[0206] Sometime during slicing, food articles are exhausted (completely sliced) when the current accumulated stacks or drafts are only partially completed on the jump conveyor **3064**. According to one advantage of the combination of the present invention, the partially completed stacks or drafts are moved from the jump conveyor onto the weighing and classifying conveyor **102** to be held in a standby position on the weighing and classifying conveyor **102**. New food articles are loaded onto the machine **100** and initial slicing begins. However, initial slicing produces scrap pieces which must be removed from the salable product. The jump conveyor **3064** collects the scrap pieces and conveys the scrap pieces in a reverse direction to dump the scrap pieces off the back end of the jump conveyor down onto the scrap accumulating conveyor **170** where the pieces are removed with any other scrap on the conveyor. Alternatively, the jump conveyor **3064** can be lowered a small amount using the raising mechanism **3106**, and the jump conveyor **3064** conveys the scrap pieces in a forward direction to dump the scrap pieces off the front end of the jump conveyor down onto the scrap accumulating conveyor **170** where the pieces are removed with any other scrap on the conveyor.

[0207] The jump conveyor can also be configured as described in U.S. Ser. No. 11/449,574 filed Jun. 8, 2006 herein incorporated by reference.

Onboard Information Carrier System

[0208] As another feature of the invention, the onboard information carrier system **135** can be incorporated into removable parts such as the slicing blade **2082** and the shear support **3060**.

[0209] The onboard information carrier system preferably incorporates radio frequency identification technology (RFID). The system can be incorporated into the exemplary embodiment of the present invention or other slicers as well, such as the FX180® slicer available from Formax, Inc. of Mokena, Ill., USA and slicers described in U.S. Pat. No. 5,628,237 and European patent EP 0 713 753, herein incorporated by reference.

[0210] FIGS. **51** and **52** illustrate the system **135** comprises a data carrier **4001** embedded into the blade **2082** for storing data from which data can be read and to which data can be written, a read/write head **4006** mounted to the top wall **2061** of the housing **2060** that reads/writes data from/to the data carrier **4001**, a controller or interface **4010** located within the housing **2060** or the base compartment **136** (shown schematically) communicating between the read/write head **4006** and machine control C. The data carriers are passive in that they do not have a battery. When the data carrier is within the range of the read/write head, power is transferred inductively and the data transfer initiated.

[0211] The data carrier **4001** can have stored thereon the type and size of blade, the time between re-sharpening, and the maximum speed allowable. This information will be communicated to machine control via the read/write head **4006** and the interface **4010**. The machine control C can write onto the data carrier **4001**, via the data interface **4010** and the read/write head **4006**, how often this blade is used, how long the blade is in use, the number of revolutions, the average speed, etc.

[0212] The system **135** can also comprise a data carrier **4031** embedded into the shear support for storing data from which data can be read and to which data can be written, a read/write head **4036** mounted to the far side upstanding wall of the shear support frame that reads/writes data from/to the data carrier **4031**, a controller or interface **4040** located within the base compartment **136** (shown schematically) and communicating between the read/write head **4036** and machine control C. The data carrier **4031** can have stored thereon the number of food articles to be sliced simultaneously, size of each food article, gripper quantity and size to be used, food article tray height required, and food article lift tray tooling required. This data will be used for informing the operator which gripper and food article tray tooling should be used. The data carrier **4031** can also have stored thereon the amount of degrees the blade will need to slice the product (useful for timing the start/stop feed of the product), and information needed to automatically adjust the food article tray height position.

[0213] This information will be communicated to machine control via the read/write head **4036** and the interface **4040**.

[0214] The machine control C can write onto the data carrier **4031**, via the data interface **4040** and the read/write head **4036**, how often this shear bar is used, how long in use, number of pounds produced, etc.

[0215] Preferably, the data carrier **4001** is a BL IDENT model TW-R30-B128 and the data carrier **4031** is a BL IDENT model TW-R20-B128 from Turck Inc. of Minneapolis, Minn., US. The read write heads **4006**, **4036** can be a model TB-M18-H1147 from Turck Inc. of Minneapolis, Minn., US. The interface **4010**, **4040** can also be obtained from Turck Inc. of Minneapolis, Minn., US to be compatible with the read/write head and the particular machine control.

[0216] The system **135** can also be incorporated into the grippers and any other part where operation or maintenance information or instructions could be advantageously located.

Laser Safety Guard System

[0217] The laser safety guard system **123** is illustrated in FIGS. **53** and **54**. The system comprises a near side laser sensor **5002** and a far side laser sensor **5004**. Each sensor containing a laser emitter **5022** and a laser receiver **5026**. Each sensor is protected in a housing **5006** that includes a base **5008** and an openable lid **5010**. As shown in FIG. **79**, springs **5012** are provided within the housing to urge the lid closed to the base **5008**. Air cylinders **5014** are provided

within the housing that, when supplied with pressurized air, opens the lid. Upon loss of electrical power, such as occurs during routine spray washing of the equipment, the lids are closed by force of the springs to seal the sensors within the housing to protect the sensors from spray wash and dirt.

[0218] The housing **5006** for far side sensor **5004** is mounted to the sweep mechanism housing **194** and the housing **5006** for the near side sensor **5002** is mounted to frame extension **548**. As shown in FIG. **79**, a conduit **5011** extends from the housing base **5008** of the near side sensor **5002** to the sweep mechanism housing **194**. The conduit **5011** carries electrical cables and pressurized air to the sensor **5002**.

[0219] With the lid open, a laser curtain **5020**, as shown in FIG. **78**, of infrared laser beams is projected down from a laser emitter **5022** about 2 meters in depth and with a sweep of about 270°. A laser receiver **5026** senses any interference in the curtain caused by an intrusion. The laser beam emitter/receiver works on the principle of time of flight measurement. The emitter sends out very short pulses of light. When the light is incident on an object, it is reflected back and received by the receiver. The sensor calculates the time between sending the pulse and receiving the reflection to calculate the distance of the object.

[0220] The interference is communicated from the sensor to machine control C. Upon sensing the intrusion, a corresponding operating mechanism of the apparatus is halted. For example, if the lift tray is being lifted and an operator puts his hand through the laser curtain, the machine control halts movement of the lift tray mechanism. The laser curtains protect personnel on both the far side and near side of the apparatus **100**.

[0221] The sensors **5002**, **5004** are preferably model S300 SAFETY LASER SCANNER available from Sick AG of Germany.

Weighing and Classifying Conveyor

[0222] The weighing and classifying conveyor or output conveyor **102** is illustrated if FIGS. **55-60**B and **80-82**. The conveyor **102** includes four lanes for receiving up to four product groups in a row from the jump conveyor **3064**. Each lane includes an input or deceleration conveyor **6002**, a weighing scale conveyor **6006**, and a classifying conveyor **6008**.

[0223] The deceleration conveyor **6002** is pivotal about an axis **6012** under force from a lever **6014** that is moved by a linear actuator, such as a servomotor screw drive **6016**. The deceleration conveyor **6002** is controllably pivotal to match the changing elevation of the jump conveyor **3064**. Each conveyor **6002** comprises a belt **6020** that circulates around idle rollers **6022**, **6024** and a drive roller **6028**, and against roller **6029**. The drive roller **6028** is driven by a drive belt **6034** driven by a servomotor **6036**. All four lanes are driven together by a single motor.

[0224] Each weighing conveyor **6006** includes a removable carrying unit **6006***a* and a drive unit **6006***b*. The carrying unit **6006***a* includes a belt **6050** that circulates around two rollers **6054**, **6058**. The roller **6058** includes a driven gear **6060** that is enmesh with a drive gear **6064**. The drive gear **6064** is part of a drive unit **6006***b*. The drive gear is mounted on axle **6066** that is mounted for rotation to side frame members **6070**, **6072** of the drive unit **6006***b*. The axle **6066** is driven by a belt **6078** that is circulated by a servomotor **6080**. The side frame members **6070**, **6072** are connected to a transverse member **6082** that is fastened to a load cell **6086**.

[0225] The load cell can be as described in U.S. patent application Ser. No. 11/454,143 filed on Jun. 15, 2006, herein incorporated by reference. The four load cells **6086** are preferably viscous damped load cells for vibration resistance.

[0226] The removable carrying unit **6006***a* is easily separated from the side frame members **6070**, **6072** of the drive unit **6006***b* for cleaning as demonstrated in FIGS. **56** and **57**. Each side frame member **6070**, **6072** includes two slots **6090**, **6092** that each receive a stub axle **6100** of the conveyor and the side frame members are captured between a cap **6102** of the stub axle and a base **6104** of the stub axle.

[0227] The four scale conveyors, one in each lane, are driven independently by four motors **6080** as described.

[0228] The classifier conveyor **6008** includes four conveyors **6138***a*, **6138***b*, **6138***c*, **6138***d*. Each conveyor, such as **6138***a*, includes a conveyor belt **6140** that is circulated around idle rollers **6142**, **6144** and drive roller **6146** and against roller **6148**. The drive roller **6146** is driven in rotation by a belt **6150** driven by a servomotor **6152**. All four conveyor belts **6140** are driven by the common servomotor **6152**. Each conveyor, such as **6138***a*, includes pivotal frame member **6156** that is pivotal about an axis **6160**. A linear actuator, such as a pneumatic cylinder **6164** is actuatable to pivot up or down the pivotal frame member **6156**. The pivotal frame member carries the roller **6142** so pivoting of the frame member **6156** pivots the conveyor belt **6140** as well. Each conveyor **6138***a*, **6138***b*, **6138***c*, **6138***d* is individually pivotable by corresponding pneumatic cylinders **6164**.

[0229] The conveyors **6138***a*, **6138***b*, **6138***c*, **6138***c* are pivotal from a down tilted angle position "A" corresponding to delivering off weight product to an off-weight conveyor (not shown), to a horizontal position "B" which is for on weight, acceptable product, and to a cleanup position "C". The cleanup position "C" is important in order to avoid interference with a downstream conveyor (not shown) when the weighing and classifying conveyor **102** is translated out to the cleanup position of FIG. **59**.

[0230] The weighing and classifying conveyor **102** is supported on a pair of rails **6180**, **6182** that are connected to be bottom wall **140** of the base section **104** of the apparatus **100**. The conveyor **102** is fastened to four slide bearings **6186** that slide on the rails **6180**, **6182**. A linear actuator or pneumatic cylinder **6190** is fastened to the conveyor housing and includes a rod **6192** that extends rearward through the housing and is fastened to a stop **6196** provided on the rails between the conveyor **102** and the apparatus **100**. When the rod **6192** is forced by air pressure delivered into the cylinder to extend, the conveyor **102** slides away from the apparatus **100** to a clean up position as shown in FIG. **59**. While a pneumatic cylinder is shown, any other means to move the conveyor away from the apparatus, including a motor, a screw drive, or human force, could be used in place of the pneumatic cylinder.

[0231] FIGS. **80-83** illustrates a position adjustment feature of the weighing and classifying conveyor **102**. Each of the belts **6020** of the four deceleration conveyors **6002** comprises a plurality of belts elements **6206** that encircled the rollers **6022**, **6024**, and drive roller **6028**. The rollers **6022** are each carried on a sidable carriage **6210**. The sidable carriages **6210** are sidable along a support tube **6216**. Each carriage **6210** has a threaded hole **6222** that receives a single threaded adjustment rod **6230** that is fixed to a frame of the conveyor but allowed to rotate. Each carriage **6210** has a dedicated single adjustment rod **6230** for moment all that dedicated

carriage **6210**. The rod **6230** allows fine positioning of the ends of the four deceleration conveyors **6002**. This is particularly advantageous to ensure that slices delivered from the deceleration conveyors **6002** are perfectly centered when passing across the weighing conveyors **6006** for accurate weighing. Depending on conditions, the product slice from the food articles may not land precisely on the jump conveyor **3064** so that this adjustment is advantageous. Although a manual adjustment is described, it is readily understood that an automatic adjustment such as with a linear actuator, servomotor or servo screw drive could be used as well.

[0232] The conveyor **6002** comprises a belt **6020** that circulates around idle rollers **6022**, **6024** and a drive roller **6028**, and against roller **6029**. The drive roller **6028** is driven by a drive belt **6034** driven by a servomotor **6036**. All four lanes are driven together by a single motor.

Adjustable Conduit Connections

[0233] Because various compartments within the combination **100/102** must be compatible with the moving with respect to other compartments, accommodations must be made for differential movement and rotation with regard to conduits for signal and power cables and pneumatic tubing. A conduit **8000** shown in FIG. **5** is provided with a telescopic slide joint **8002** and upper rotary joint **8004** and a lower rotary joint **8006** to accommodate the relative pivoting motion between the food article feed drive compartment **196** and the base compartment **136**. A conduit **8010** between the weighing and classifying conveyor **102** and the base compartment **136** requires a sliding joint **8012** wherein some excess conduit length is provided within the weighing and classifying conveyor **102**.

Servomotors

[0234] The servomotors used within the combination apparatus **100/102** are air cooled except for the servomotor **2098** which is preferably water cooled. All the servomotors and other actuators are precisely controlled for movement and position by the machine control, so that conveyor movements, lift tray movements, sweep movements, elevation adjusting movements, food article end removal apparatus movements, food article feed movements, blade movements, clean up position movements, etc. are all coordinated for optimal machine performance.

The invention claimed is:

1. An output conveyor for a food article slicing machine that outputs slices, the conveyor comprising:

a first conveyor for receiving said slices and for lateral positioning of said slices with respect to the conveying direction.

2. The output conveyor of claim **1**, wherein said first conveyor comprises a laterally adjustable end for laterally positioning said slices.

3. The output conveyor of claim **1**, wherein said first conveyor comprises: a carriage, and an adjustment rod; a first conveying surface connected around said carriage at an of said first conveyor; said carriage engaging said adjustment rod; said carriage movable laterally said adjustment rod.

4. The output conveyor of claim **1**, wherein said first conveyor comprises a pivotal axis at a first end of said first conveyor and an actuator for pivoting the first conveyor about the pivot axis to adjust the vertical position of an end of said first conveyor opposite the first end.

5. The output conveyor of claim **1**, wherein said conveyor comprises a plurality of said first conveyors; said first conveyors arranged adjacent to one another and defining a plurality of output lanes corresponding to a plurality of food articles sliced by a slicer.

6. The output conveyor of claim **1**, further comprising: a weighing conveyor for determining a weight of said slices; said weighing conveyor comprises a removable carrying unit for turning a conveyor belt.

7. The output conveyor of claim **6**, comprising a drive unit for driving said carrying unit,

said carrying unit comprises an end roller for turning said conveyor belt;

said end roller comprises a driven gear for engaging a drive gear of the drive unit;

said drive gear driven by a power source to turn said driven gear.

8. The output conveyor of claim **7**, wherein said driven gear is enmeshed with said drive gear when said carrying unit is connected to said drive unit; said drive unit is connected to a load cell; said load cell for determining a weight of said slices on said weighing conveyor.

9. The output conveyor of claim **7**, wherein said output conveyor comprises at least two weighing conveyors; each said weighing conveyor adjacent to the other; each said weighting conveyor independently driven by one or more drive sources.

10. An output conveyor for a food article slicing machine that outputs slices, the conveyor comprising:

a weighing conveyor for determining a weight of said slices;

said weighing conveyor comprises a removable carrying unit for turning a conveyor belt.

11. The output conveyor of claim **10**, comprising a drive unit for driving said carrying unit;

said carrying unit comprises an end roller for turning said conveyor belt;

said end roller comprises a driven gear for engaging a drive gear of the drive unit;

said drive gear driven by a power source to turn said driven gear.

12. The output conveyor of claim **11**, wherein said driven gear is enmeshed with said drive gear when said carrying unit is connected to said drive unit; said drive unit is connected to a load cell; said load cell for determining the weight of said slices on said weighing conveyor.

13. The output conveyor of claim **11**, further comprising: at least two weighing conveyors; each said weighing conveyor parallel to the other; each said weighting conveyor independently driven by one or more drive sources.

14. A food article slicing machine comprising:

a slicing station comprising a knife blade and a knife blade drive driving the blade along a cutting path;

a food article feed apparatus supporting one or more food articles for movement along corresponding food article paths intersecting the cutting path;

an output conveyor having a first conveyor for receiving said slices and for lateral positioning of said slices with respect to the conveying direction.

15. The food article slicing machine according to claim **14**, wherein said first conveyor comprises a carriage and an adjustment rod; a first conveying surface connected around

said carriage at an of said first conveyor; said carriage engaging said adjustment rod; said carriage movable laterally by said adjustment rod.

16. The food article slicing machine according to claim **14**, wherein said first conveyor comprises a pivotal axis at a first end of said first conveyor and an actuator for pivoting the first conveyor about the pivot axis to adjust the vertical position of an end of said first conveyor opposite the first end.

17. The food article slicing machine according to claim **14**, wherein the output conveyor comprises:

a weighing conveyor for determining a weight of said slices;

said weighing conveyor comprises a removable carrying unit for turning a conveyor belt.

18. The food article slicing machine according to claim **17**, comprising and a drive unit for driving said carrying unit;

said carrying unit comprises an end roller for turning said conveyor belt;

said end roller comprises a driven gear for engaging a drive gear of the drive unit;

said drive gear driven by a power source to turn said driven gear.

* * * * *