US009400456B2

(12) **United States Patent**
Iwakoshi et al.

(10) **Patent No.: US 9,400,456 B2**
(45) **Date of Patent: Jul. 26, 2016**

(54) **BELT CONVEYOR UNIT AND IMAGE FORMING APPARATUS**

(71) Applicant: **CANON KABUSHIKI KAISHA**, Tokyo (JP)

(72) Inventors: **Tomoyuki Iwakoshi**, Suntou-gun (JP); **Atsushi Ogata**, Mishima (JP); **Daisuke Kaneko**, Suntou-gun (JP)

(73) Assignee: **Canon Kabushiki Kaisha**, Tokyo (JP)

(*) Notice: Subject to any disclaimer, the term of this patent is extended or adjusted under 35 U.S.C. 154(b) by 0 days.

(21) Appl. No.: **14/274,871**

(22) Filed: **May 12, 2014**

(65) **Prior Publication Data**

US 2014/0339056 A1 Nov. 20, 2014

(30) **Foreign Application Priority Data**

May 14, 2013 (JP) 2013-102397
Dec. 11, 2013 (JP) 2013-256385

(51) **Int. Cl.**
B65G 39/16 (2006.01)
G03G 15/16 (2006.01)

(52) **U.S. Cl.**
CPC ***G03G 15/1615*** (2013.01); *B65G 39/16* (2013.01); *G03G 2215/00156* (2013.01); *G03G 2215/00168* (2013.01)

(58) **Field of Classification Search**
CPC B65G 39/16; B65G 15/64
USPC 198/806, 807, 810.03
See application file for complete search history.

(56) **References Cited**

U.S. PATENT DOCUMENTS

4,286,706	A *	9/1981	Castelli et al.	198/806
7,058,345	B2 *	6/2006	Abe et al.	198/806
7,111,724	B2 *	9/2006	Donnenhoffer	198/807
7,434,680	B2 *	10/2008	Kitamura	198/806
7,921,987	B2 *	4/2011	Kitamura	198/806
8,657,104	B2 *	2/2014	Asaoka et al.	198/806
2013/0306441	A1 *	11/2013	Asaoka et al.	198/806

FOREIGN PATENT DOCUMENTS

JP	2000-053270	A	2/2000
JP	2005-031504	A	2/2005
JP	2010230958	A	10/2010

* cited by examiner

Primary Examiner — James R Bidwell
(74) *Attorney, Agent, or Firm* — Canon USA, Inc., IP Division

(57) **ABSTRACT**

An inclined flange roller is located outward of an end portion of a tension roller in the belt width direction. The inclined flange roller includes a flange surface capable of being in contact with the edge portion of a belt in a region in which the belt is wound around the tension roller and a roller surface capable of being in contact with an inner peripheral surface of the belt between the flange surface and an end portion of the tension roller in the belt width direction.

28 Claims, 24 Drawing Sheets

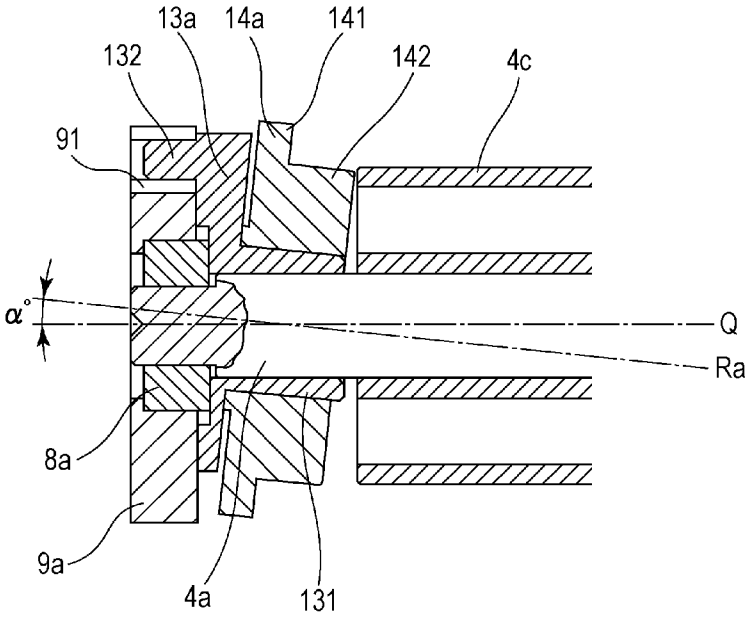

Provisur EX1048
U.S. Patent No. 9,457,487

FIG. 1

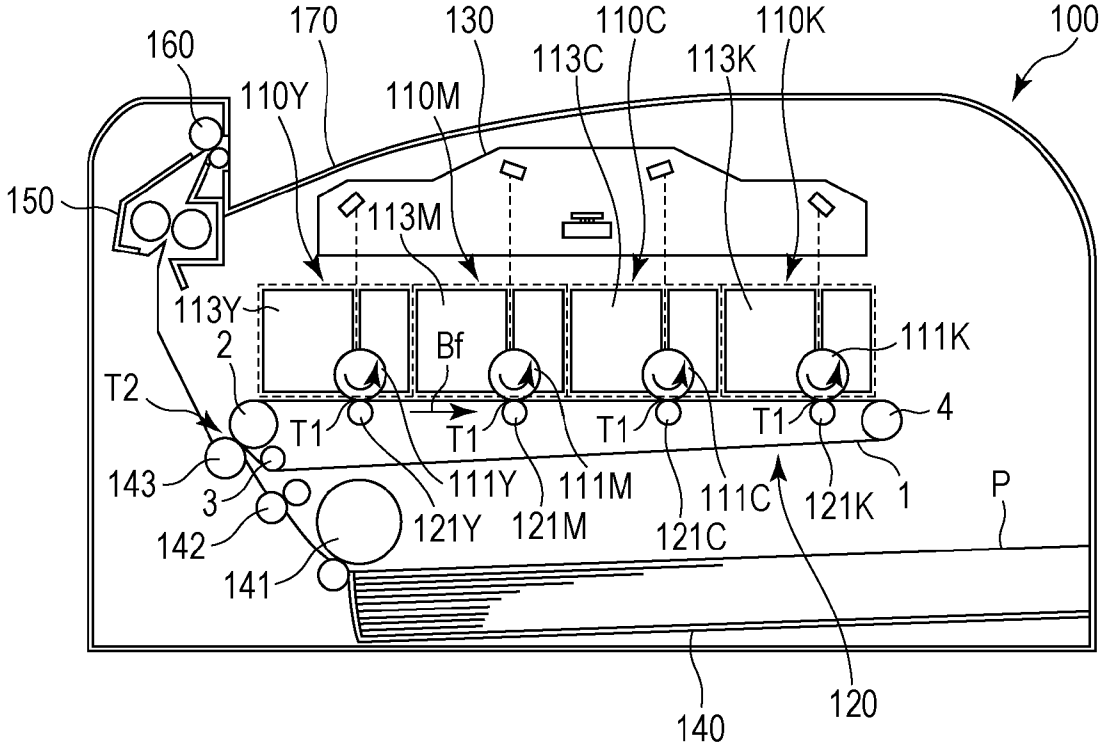
100
160
170
130
110C
110K
113C
113K
110Y
110M
150
113M
113Y
2
Bf
111K
T2
T1
T1
T1
T1
4
143
3
111Y
111M
111C
121K
1
P
142
121Y
121M
121C
141
140
120

FIG. 2

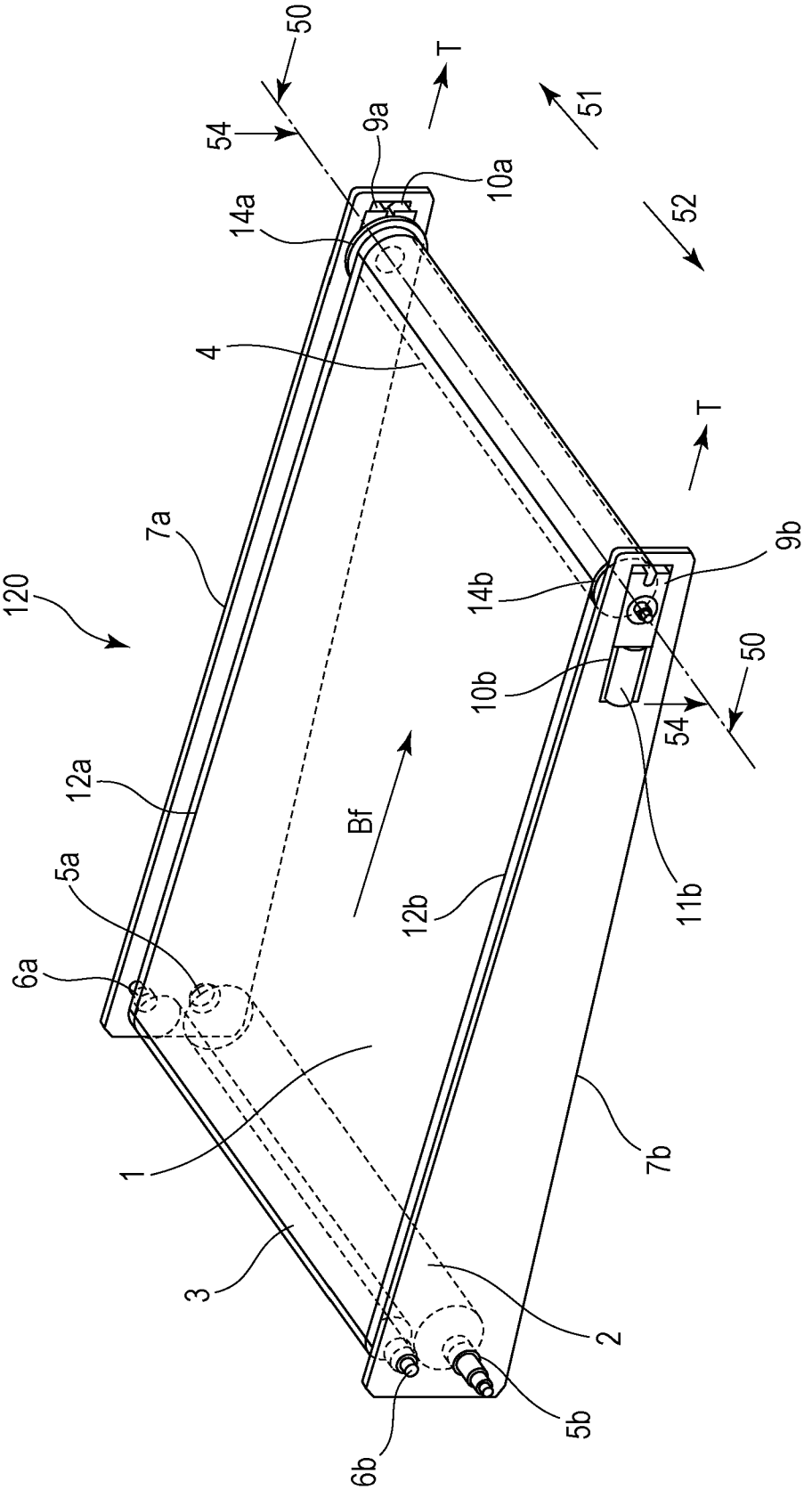
50
54
9a
T
51
10a
14a
52
4
T
7a
9b
120
14b
50
10b
54
12a
Bf
5a
12b
11b
6a
1
7b
3
2
5b
6b

FIG. 3

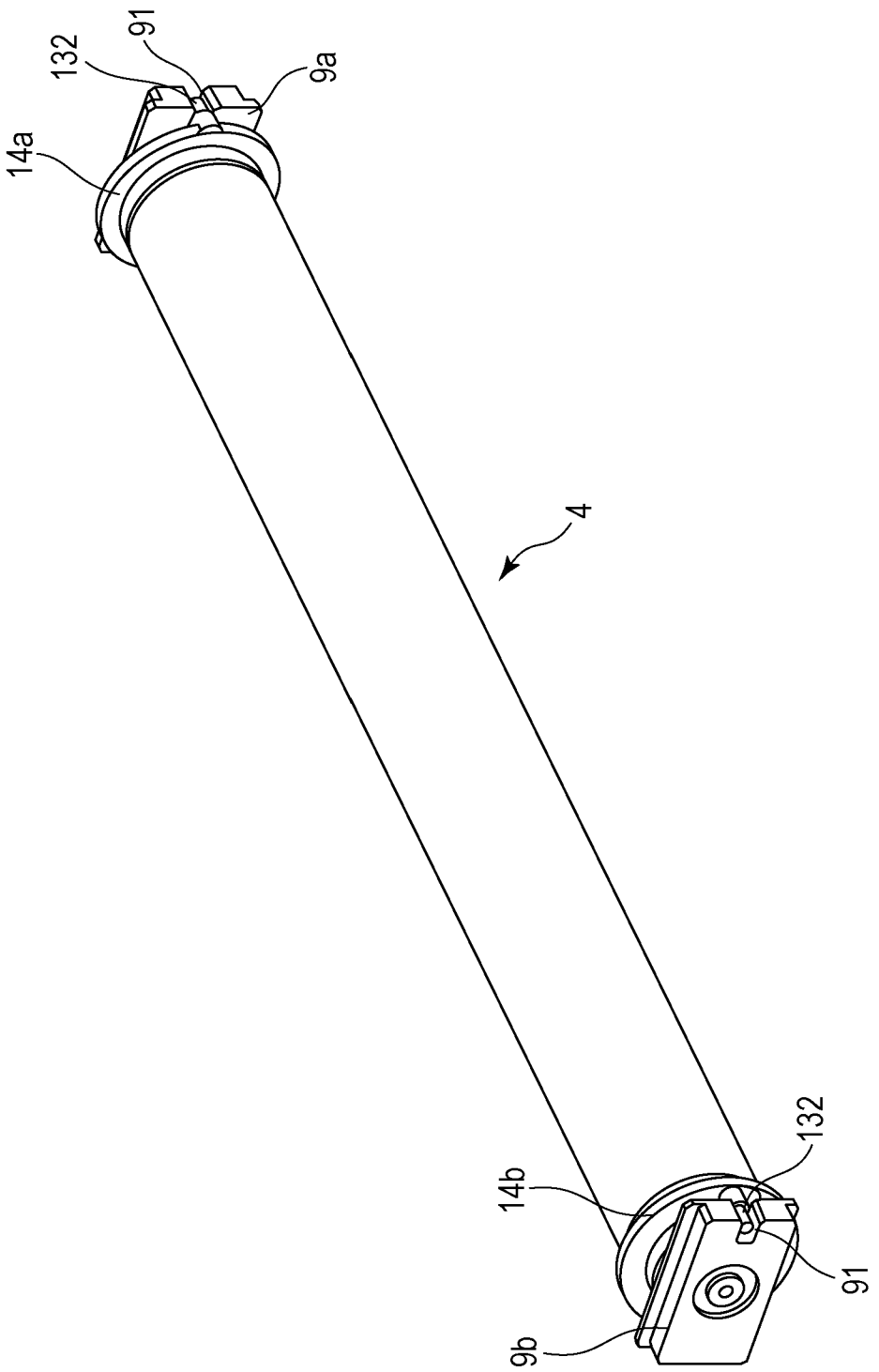

FIG. 4A

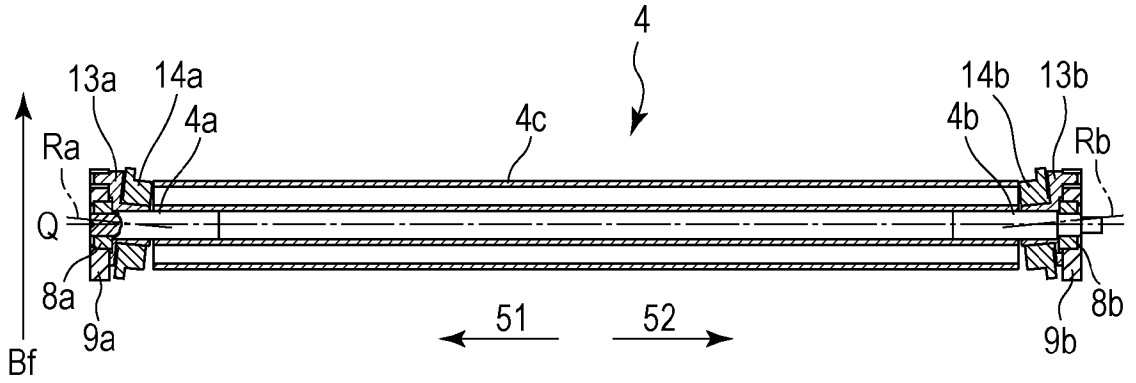
4
13a
14a
4a
4c
14b
13b
4b
Ra
Rb
Q
8a
9a
8b
9b
51
52
Bf

FIG. 4B

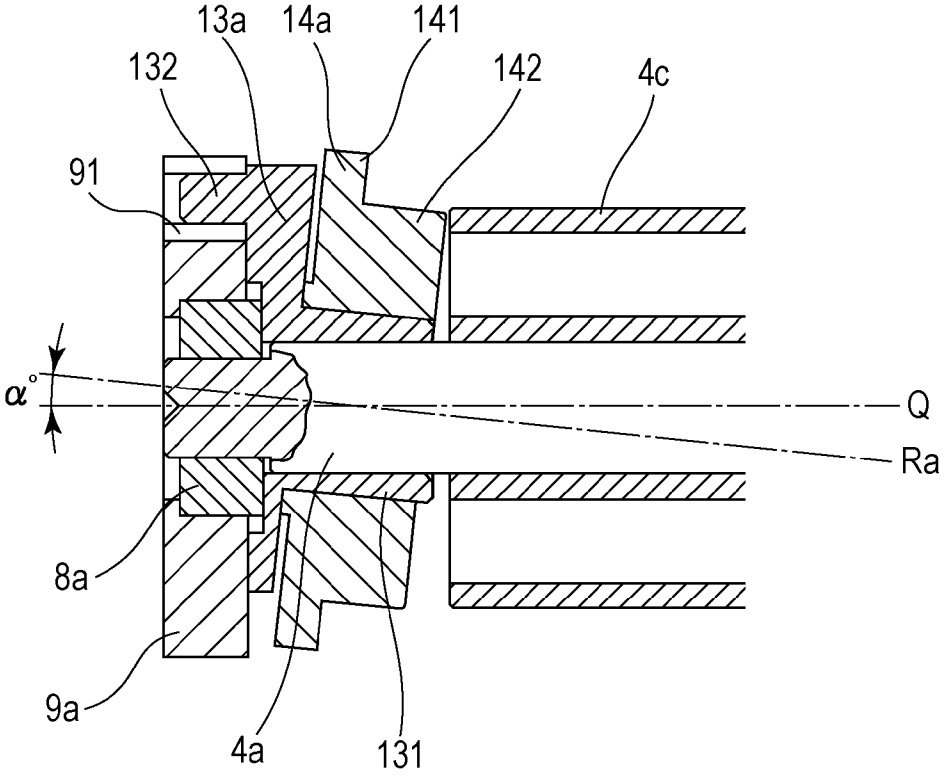
13a
14a
141
132
142
4c
91
α°
Q
Ra
8a
9a
4a
131

FIG. 5A

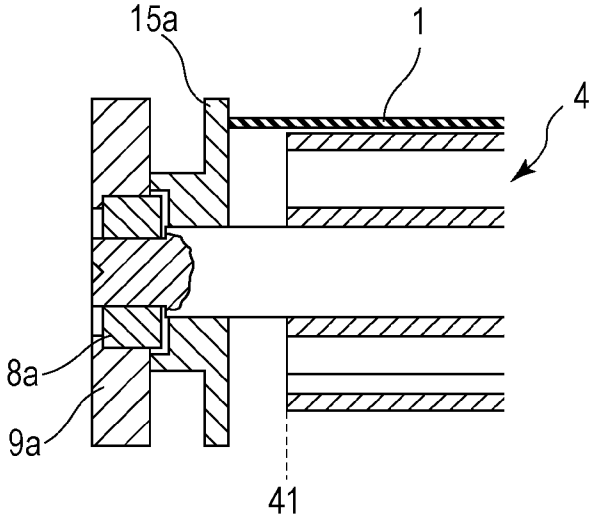

FIG. 5B

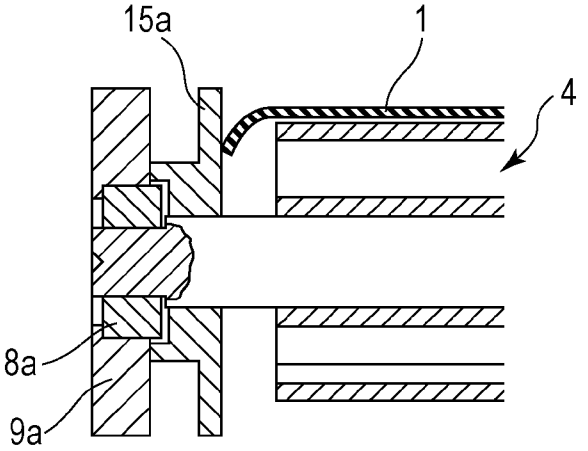

FIG. 5C

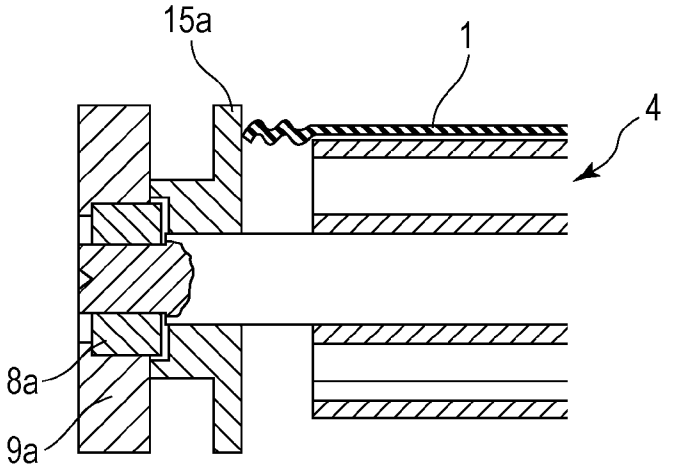

FIG. 6

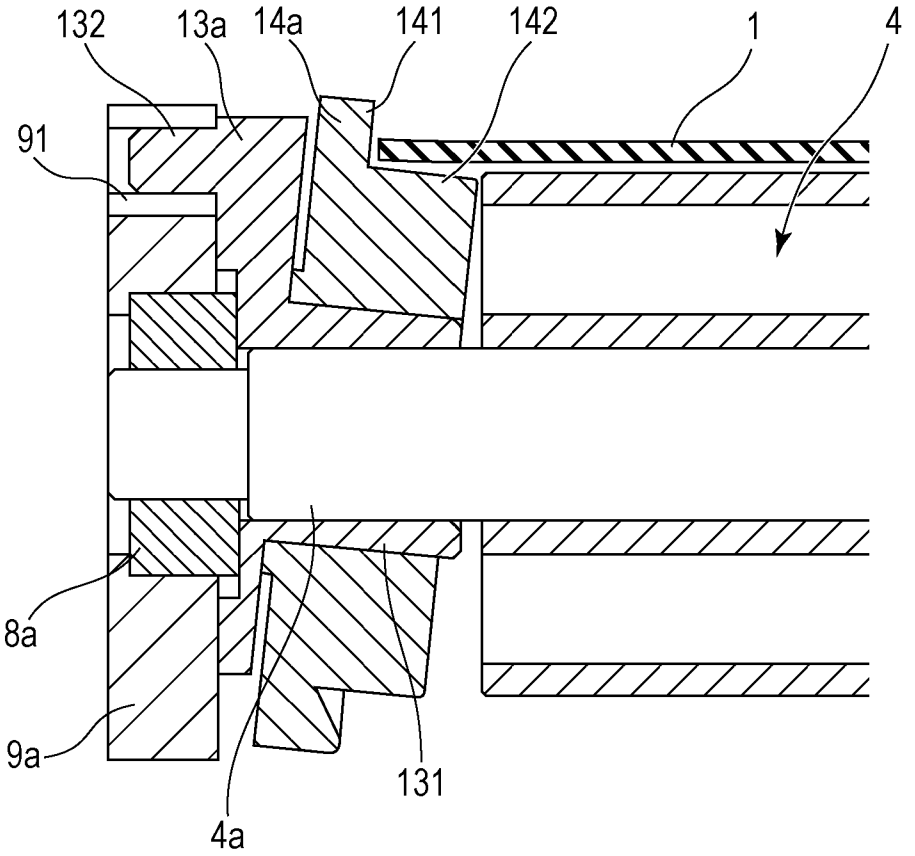

FIG. 7A

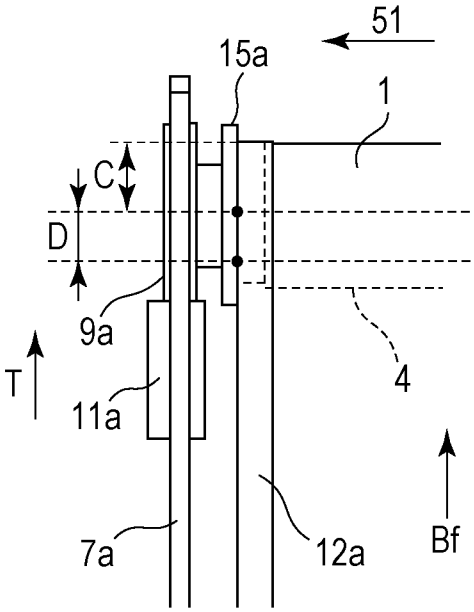

FIG. 7B

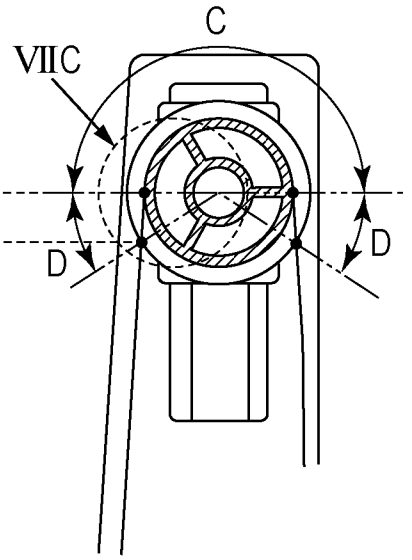

FIG. 7C

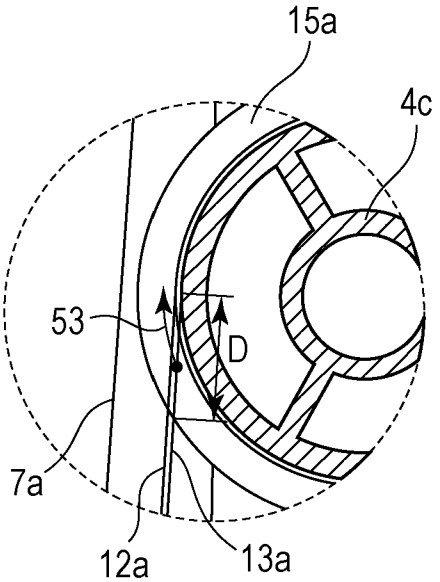

FIG. 8A

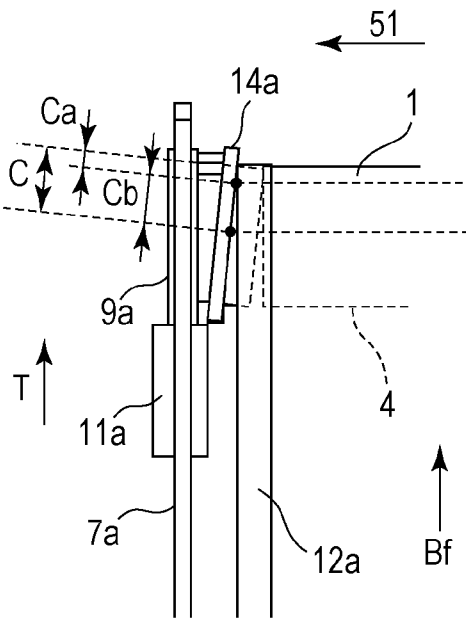

FIG. 8B

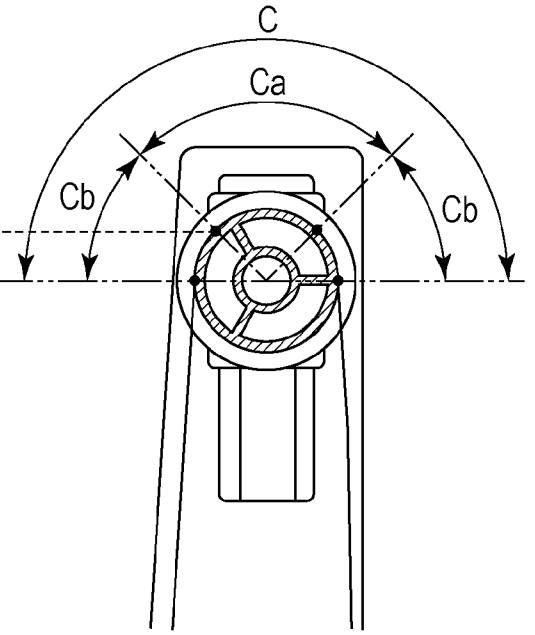

FIG. 9

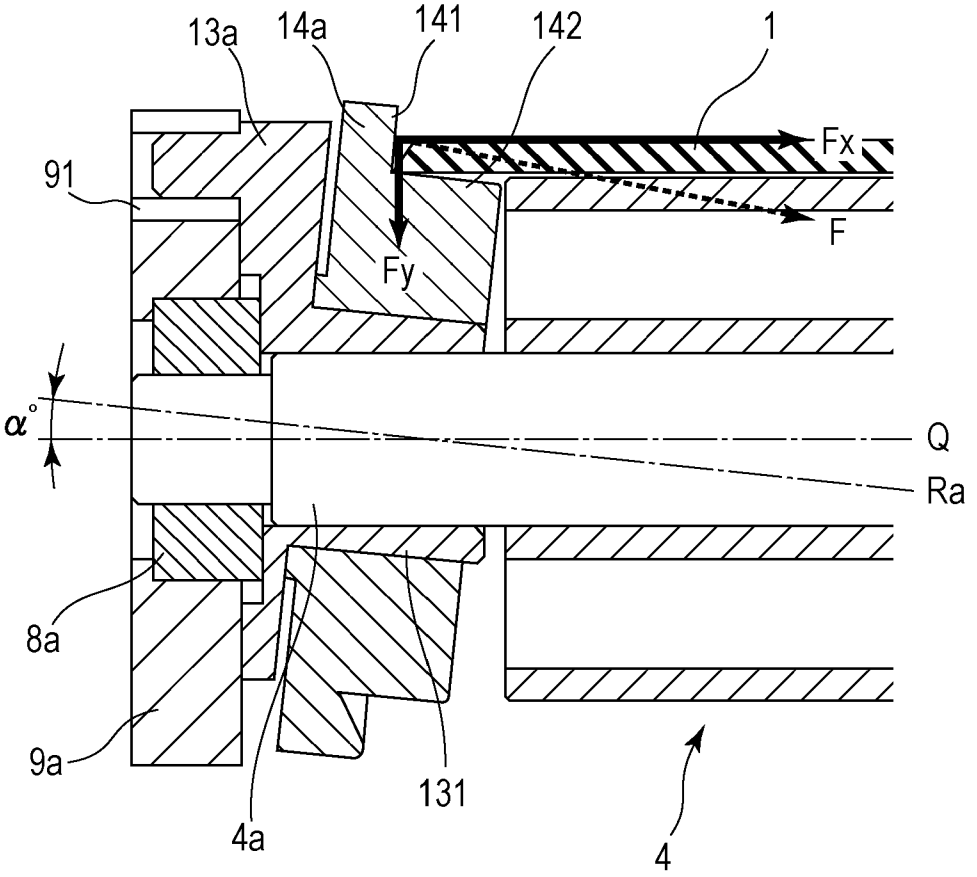

FIG. 10

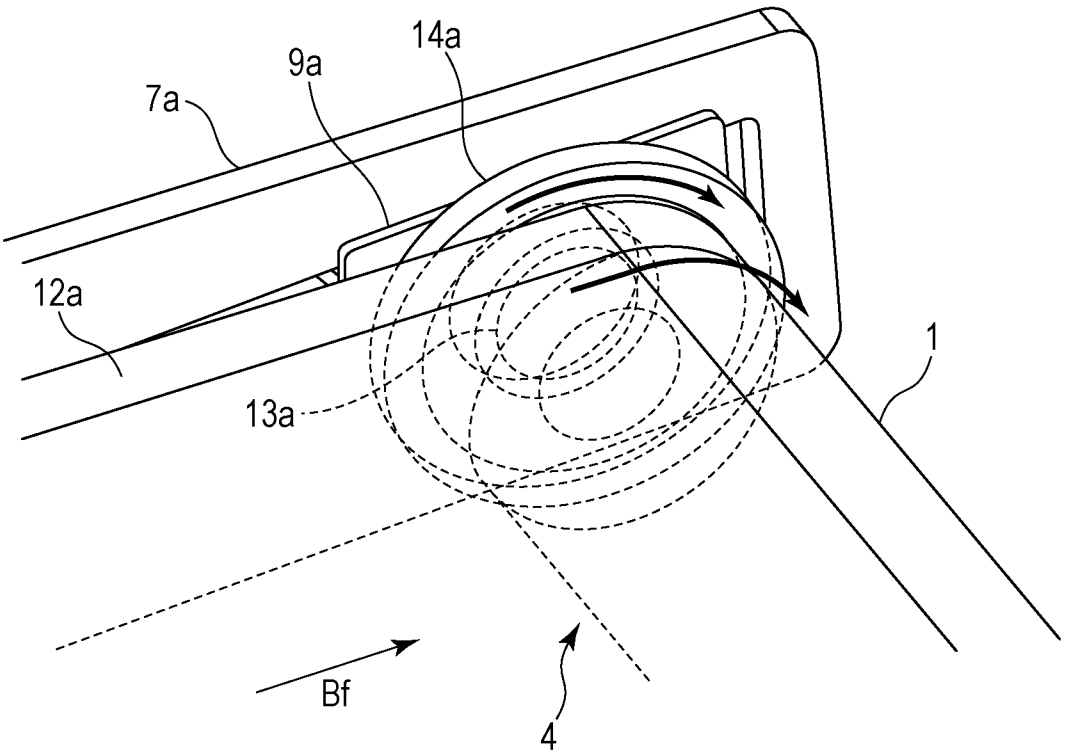

FIG. 11A

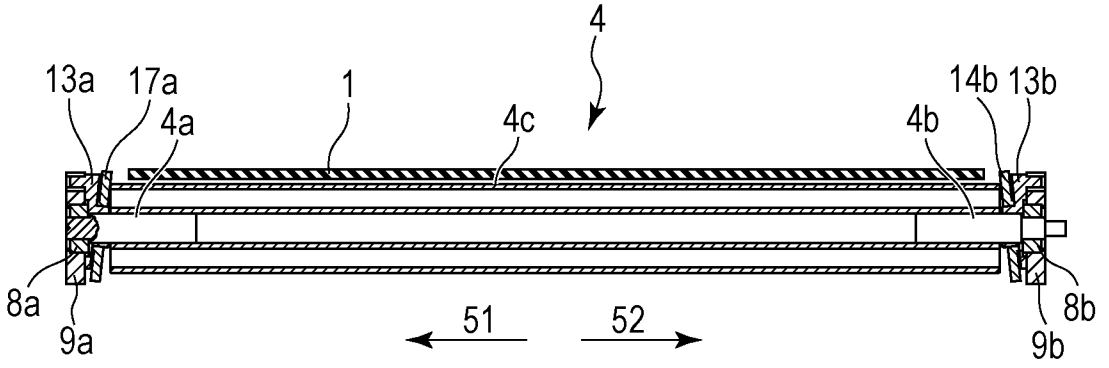

FIG. 11B

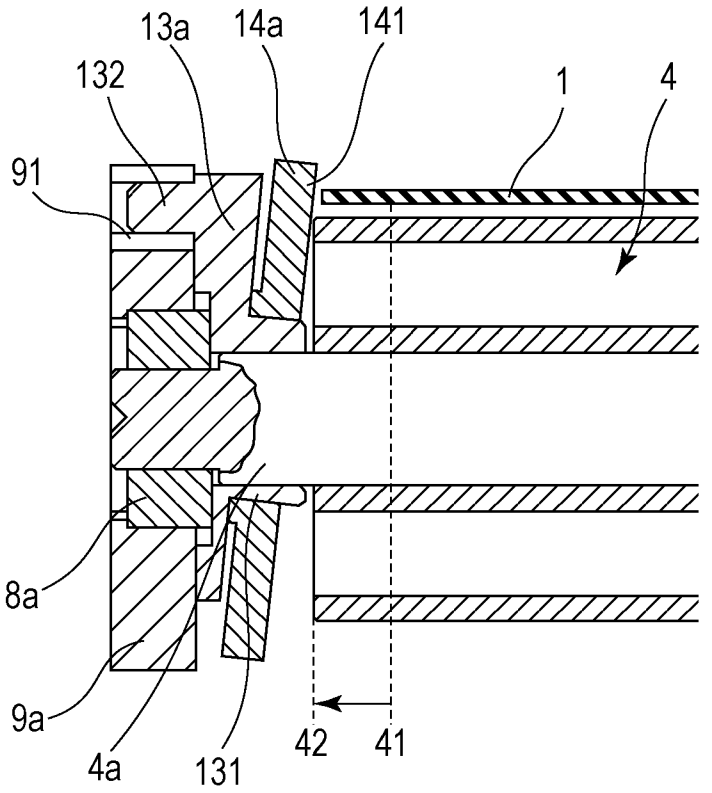

FIG. 12A

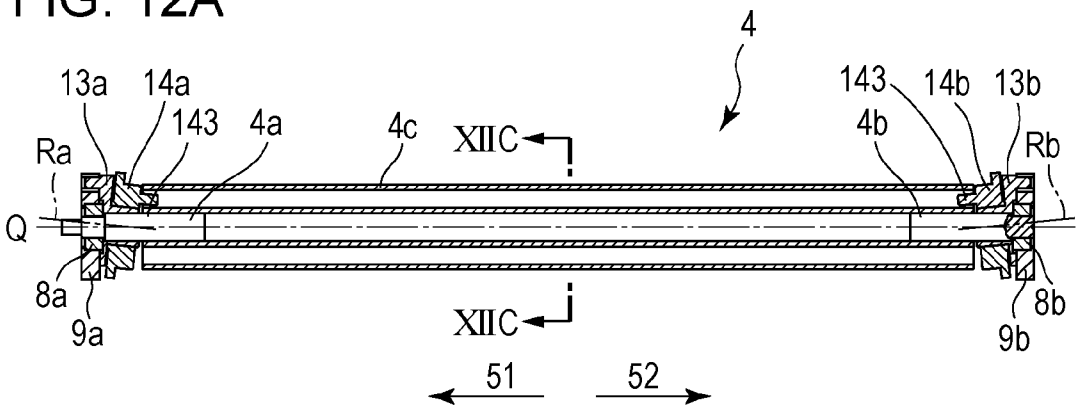

FIG. 12B

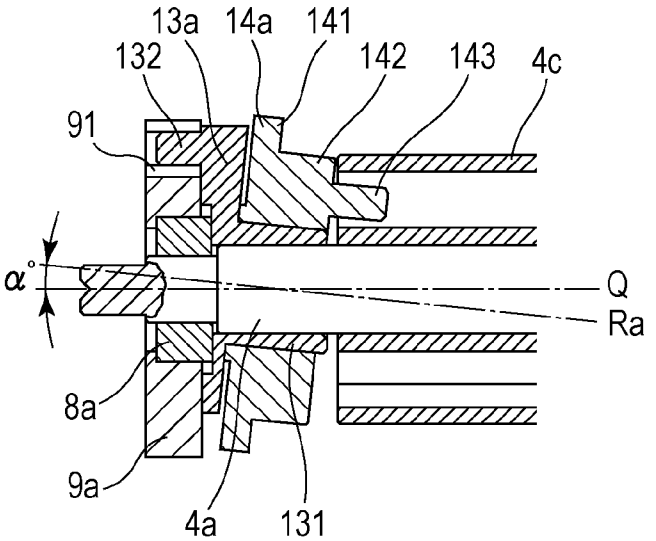

FIG. 12C

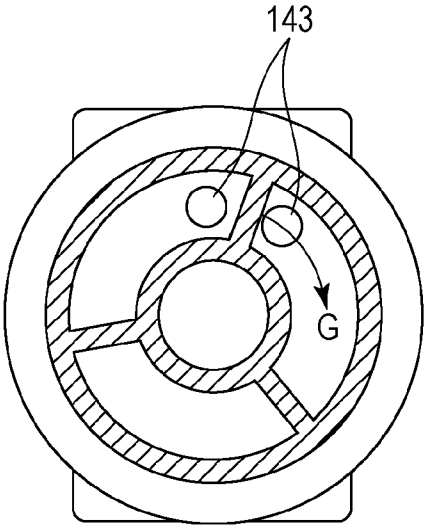

FIG. 13A

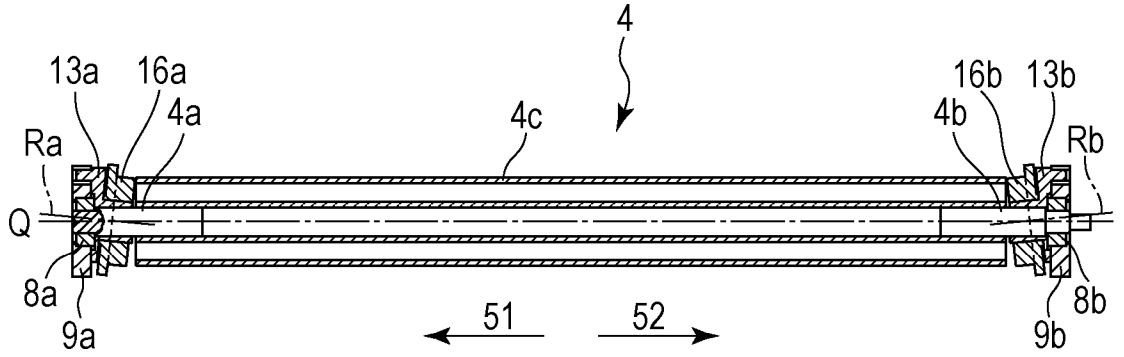

FIG. 13B

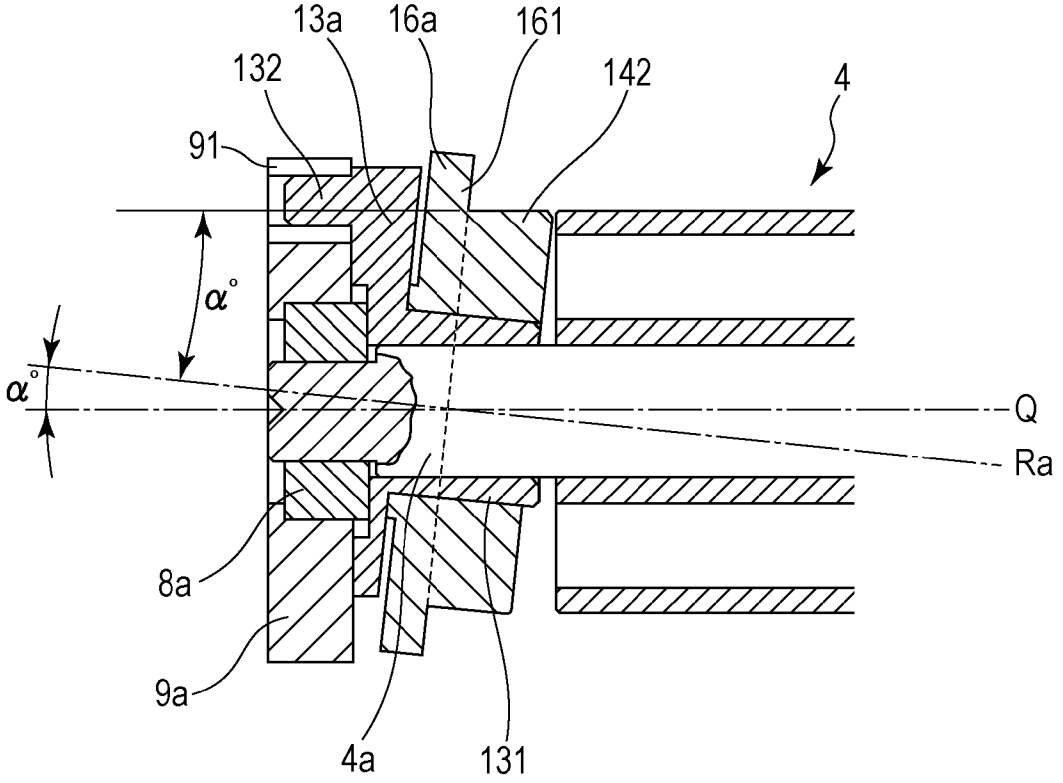

FIG. 14A

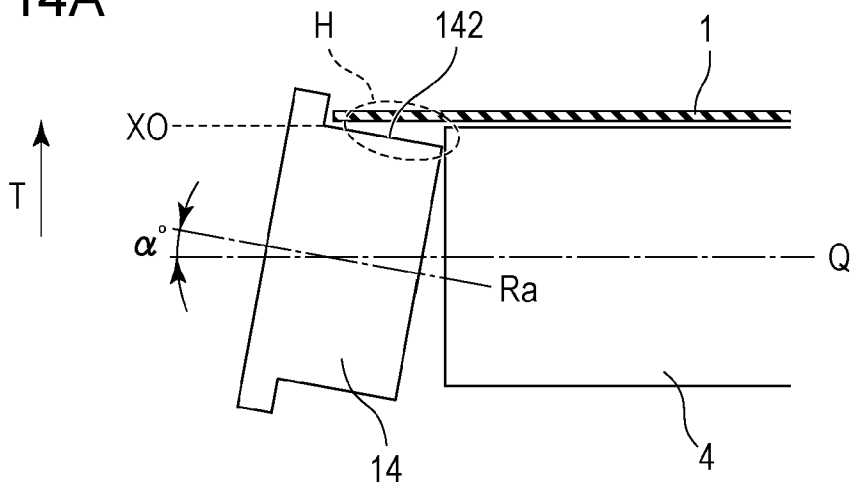

FIG. 14B

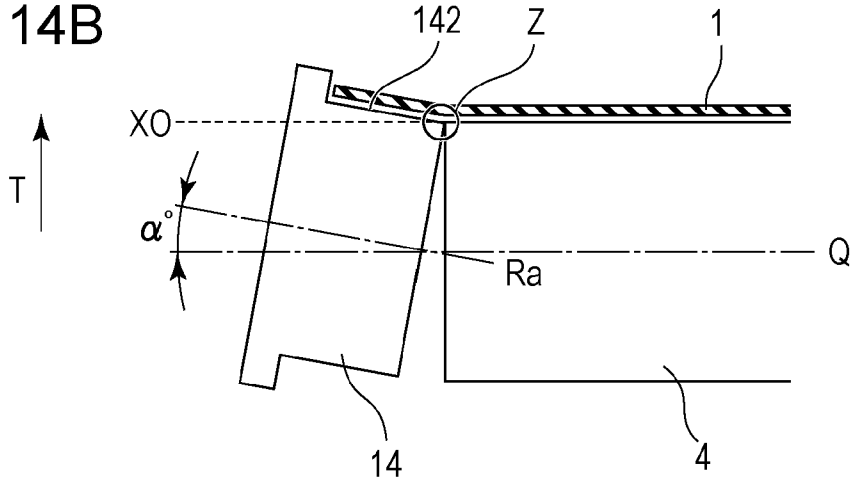

FIG. 14C

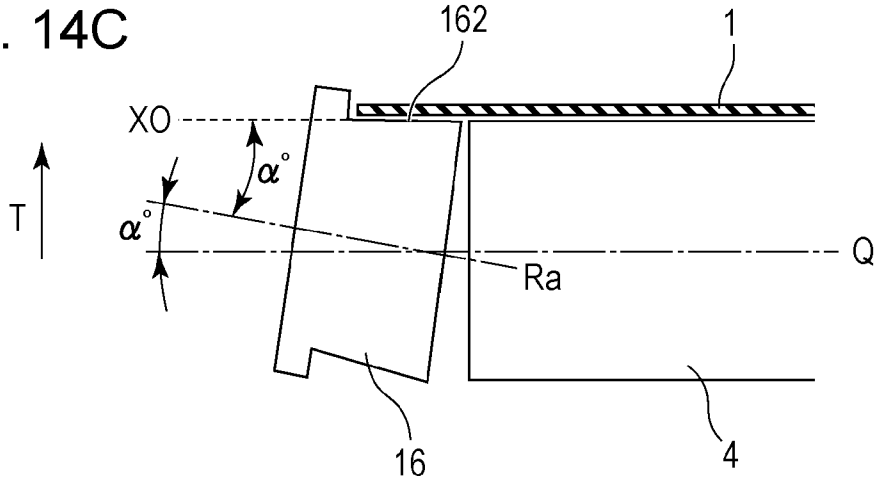

FIG. 15A

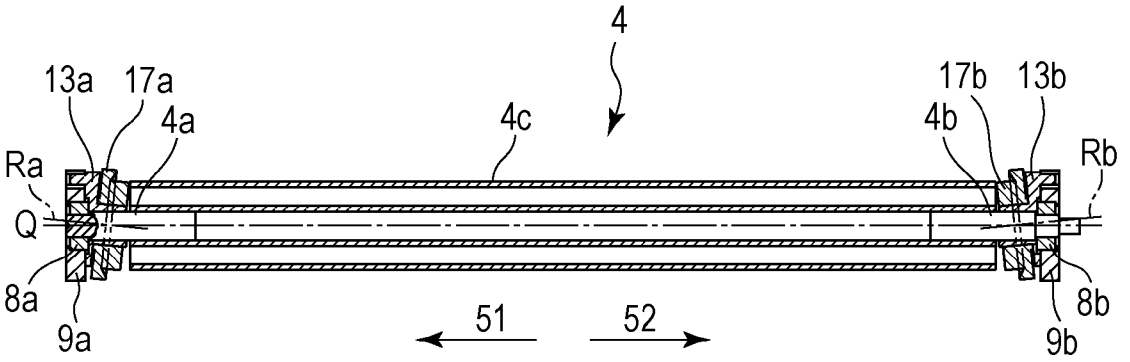

FIG. 15B

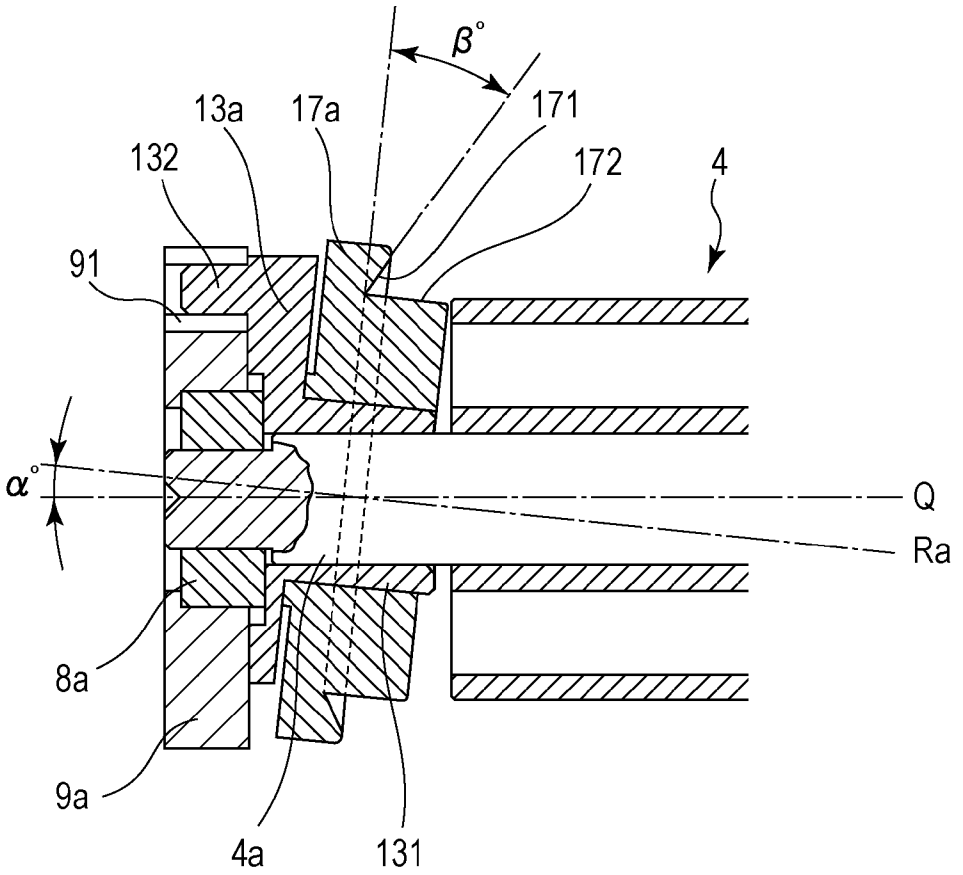

FIG. 16

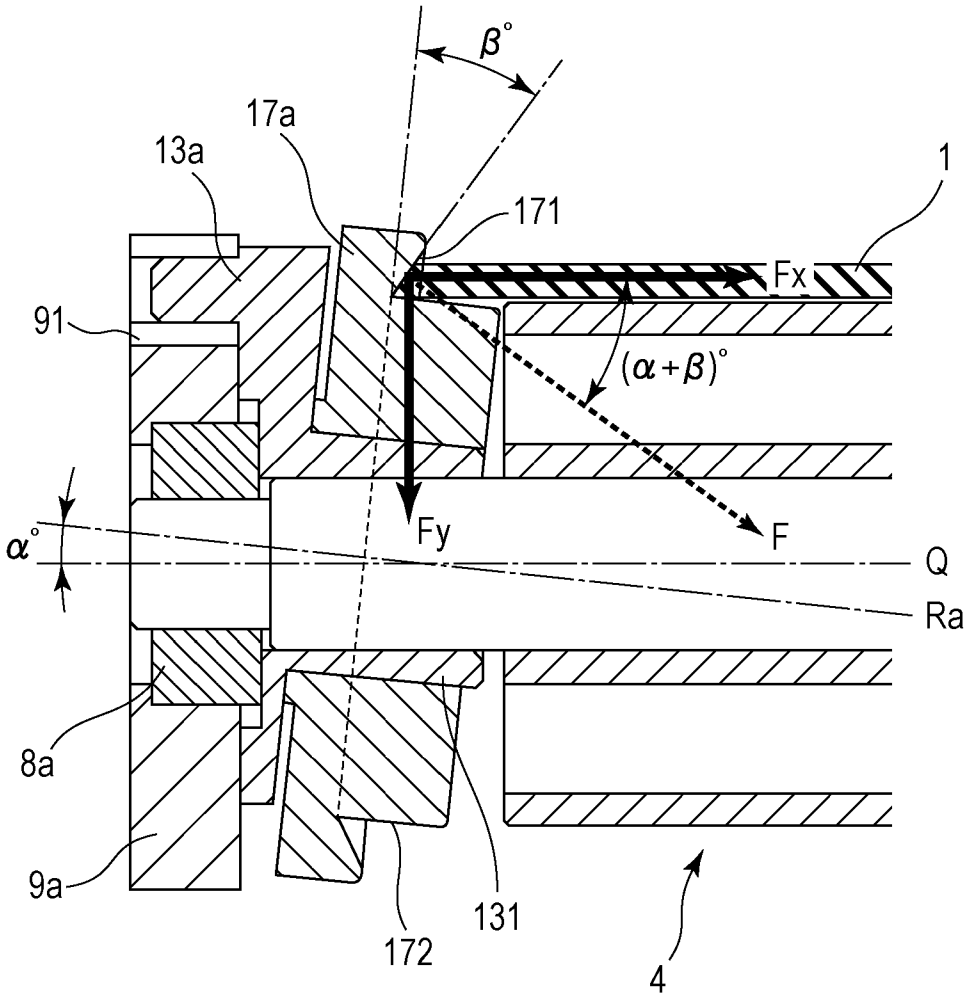

FIG. 17A

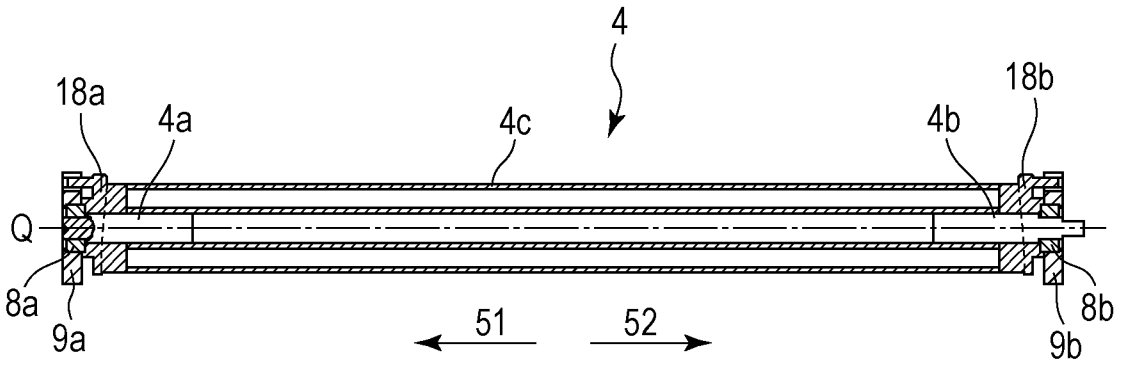

FIG. 17B

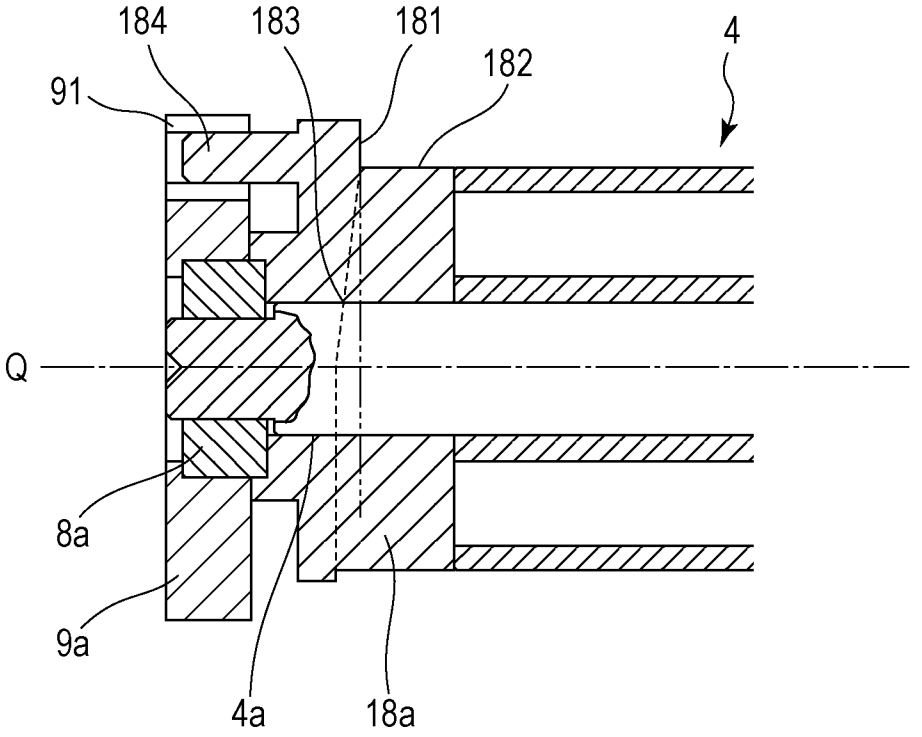

FIG. 18A

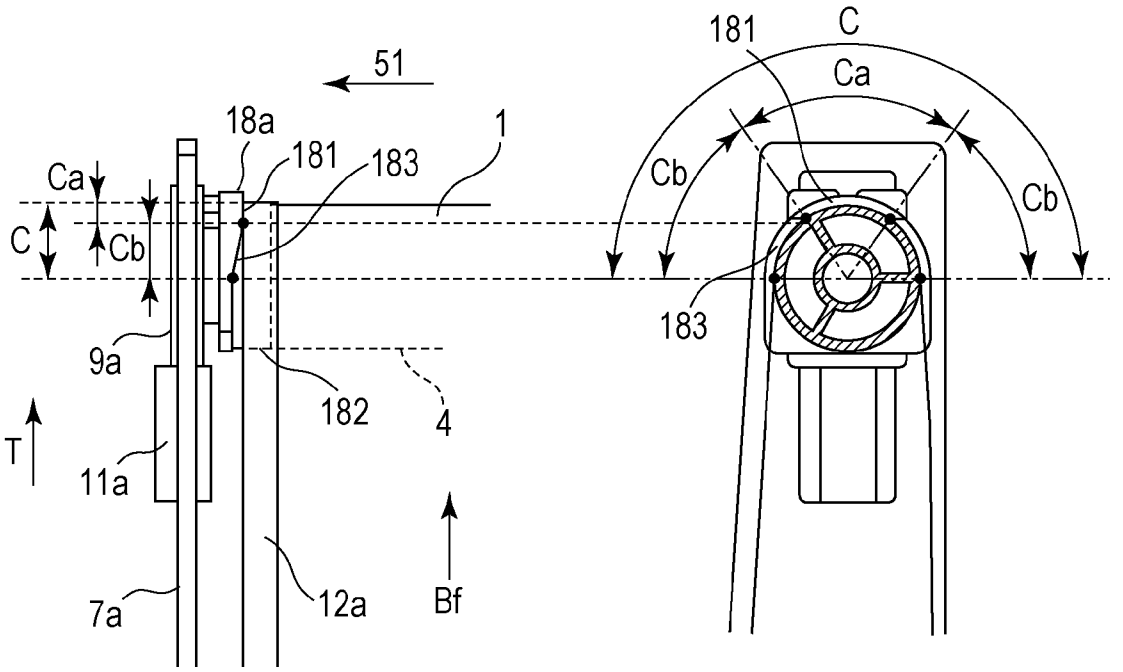

FIG. 18B

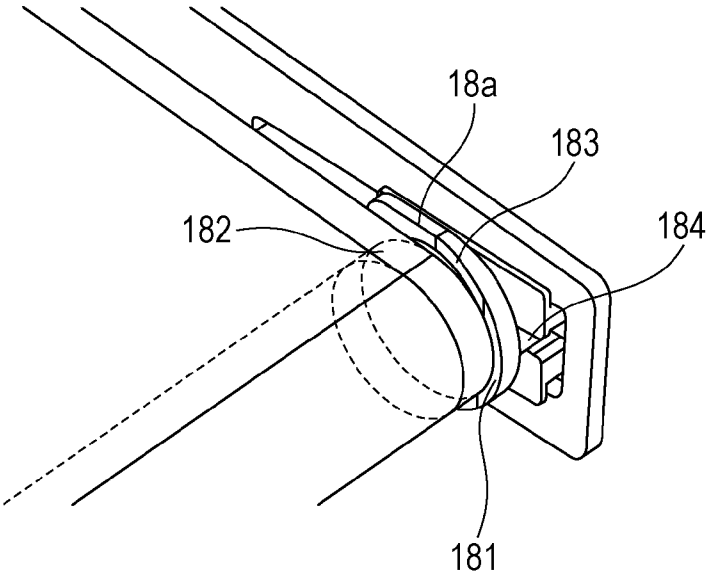

FIG. 19A

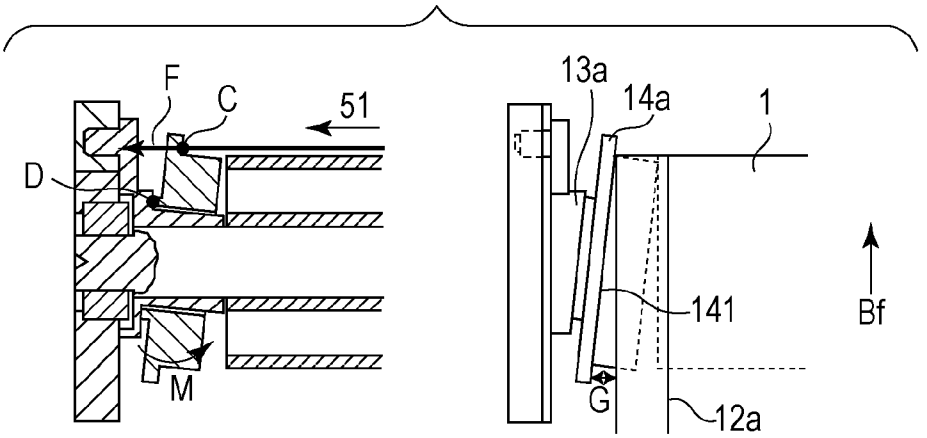

FIG. 19B

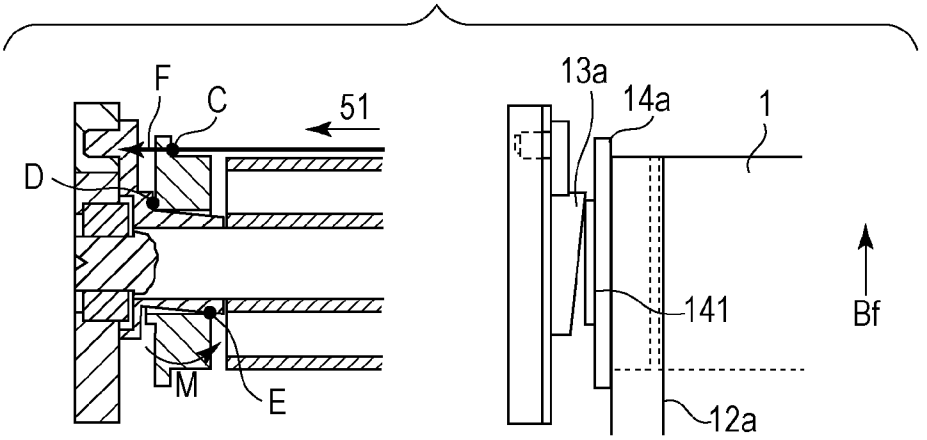

FIG. 19C

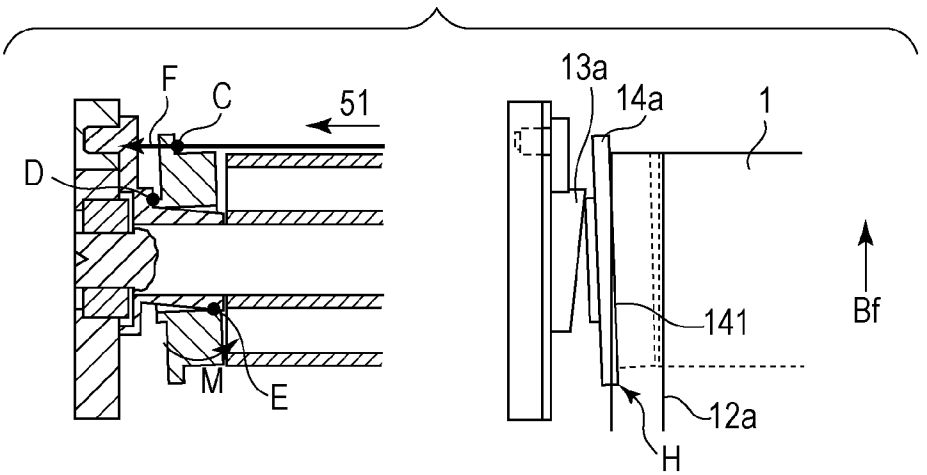

FIG. 20

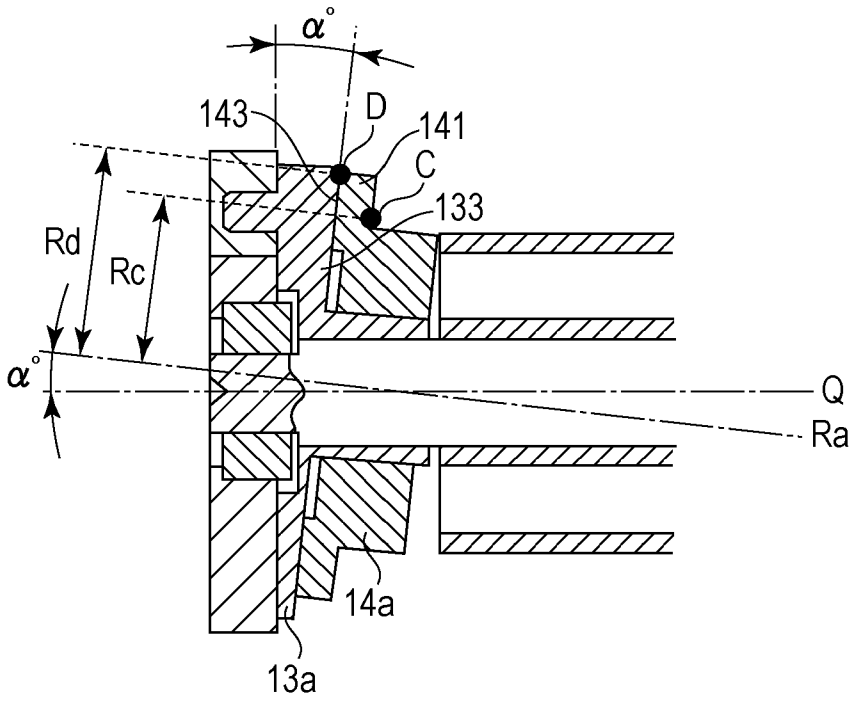

FIG. 21A

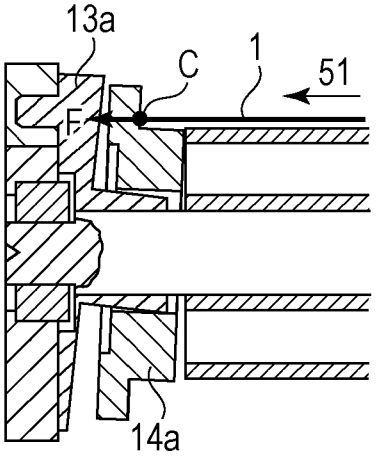

FIG. 21B

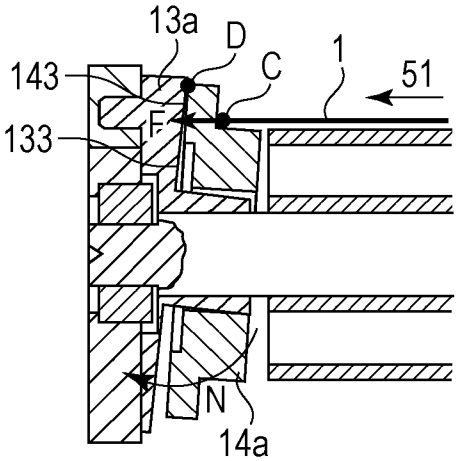

FIG. 21C

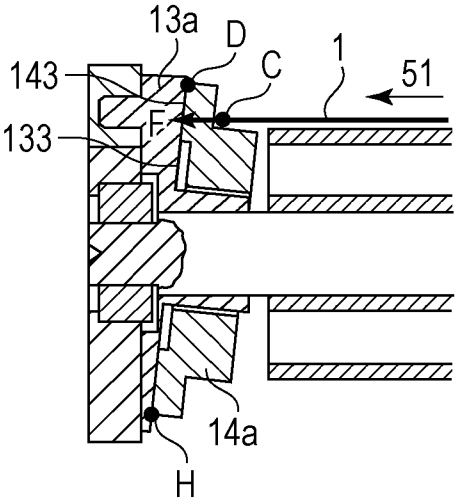

FIG. 22A

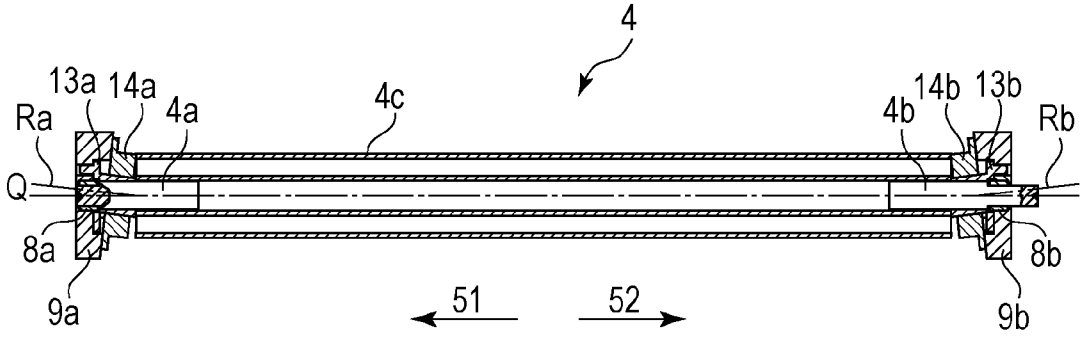

FIG. 22B

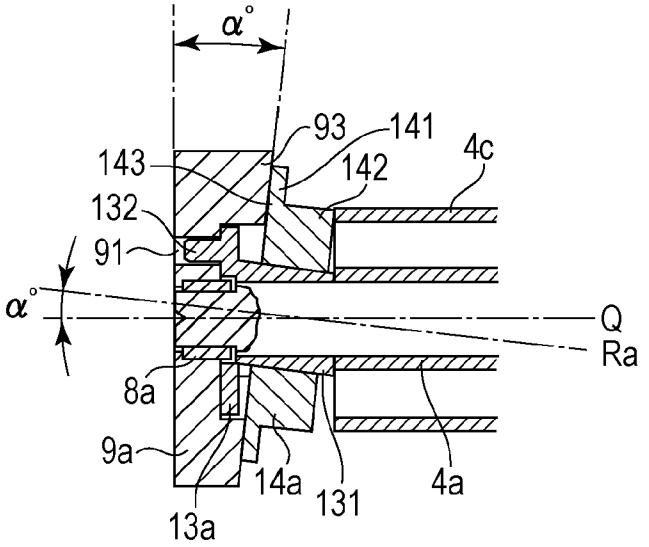

FIG. 22C

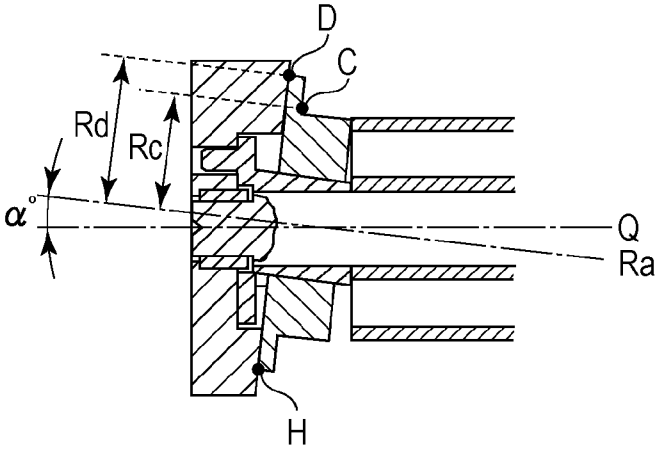

FIG. 23A

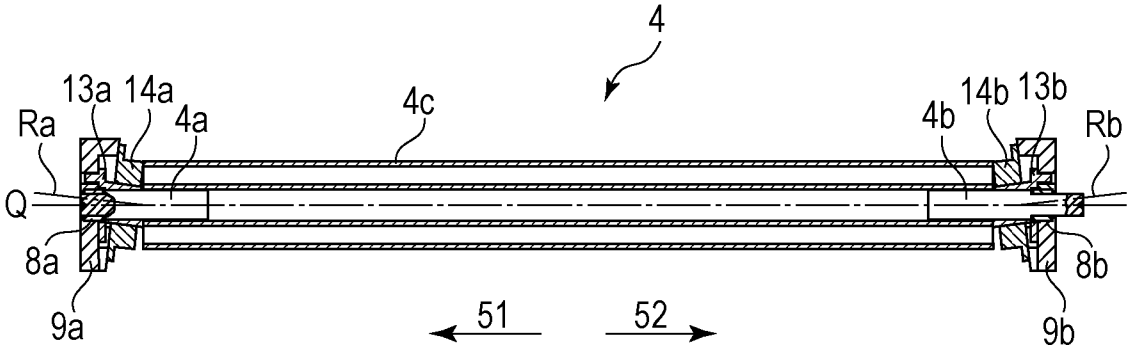

FIG. 23B

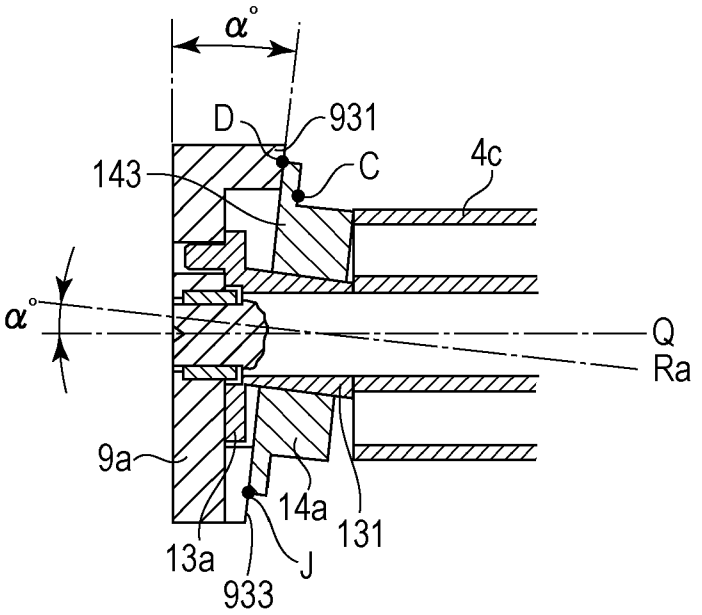

FIG. 24

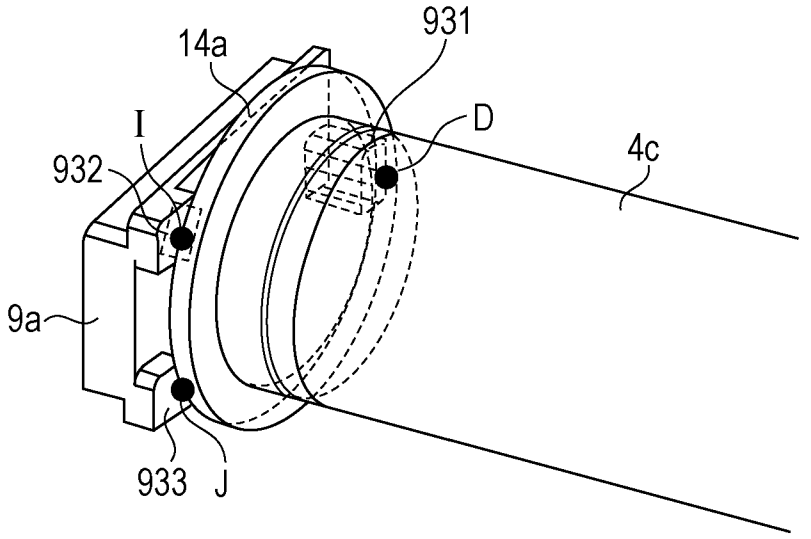

BELT CONVEYOR UNIT AND IMAGE FORMING APPARATUS

BACKGROUND OF THE INVENTION

1. Field of the Invention

The present invention relates to a belt conveyor unit having an endless belt that is stretched by a plurality of stretching rollers and is moved around the stretching rollers and an electrophotographic image forming apparatus, such as a printer or a copying machine, including the belt conveyor unit.

2. Description of the Related Art

Some existing electrophotographic printers and copying machines include a belt conveyor unit having an endless belt that is stretched by a plurality of stretching rollers and is moved around the stretching rollers. Such a belt conveyor unit has the following disadvantage. That is, when a belt moves, the belt may be shifted to one side in the width direction (i.e., a direction substantially perpendicular to the belt moving direction).

To solve such a problem, Japanese Patent Laid-Open No. 2005-31504 describes a structure in which a belt has an inner peripheral surface having a rib thereon as a protruding portion and each of stretching rollers has a flange at the end. According to Japanese Patent Laid-Open No. 2005-31504, if the belt is shifted, the flange is brought into contact with the rib to regulates the position of the rib so that the lateral shift of the belt can be regulated.

The drawback of the structure described in Japanese Patent Laid-Open No. 2005-31504 is that it requires the rib that prevents the lateral shift of the belt and, if the rib is bonded to the inner peripheral surface of the belt, it requires a rib bonding step when producing the belt. In the case where a rib is not provided, an edge portion of the belt in the width direction can be in direct contact with the flange. However, in such a case, there is a risk of cracking of the belt from the edge of the belt. Thus, the durability may be decreased.

SUMMARY OF THE INVENTION

Accordingly, the present invention provides a belt conveyor unit that prevents the lateral shift of the belt while preventing a decrease in the durability of the belt edge portion with a simplified structure and an image forming apparatus including the belt conveyor unit.

According to an embodiment of the present invention, a belt conveyor unit includes a movable endless belt, a stretching roller configured to stretch the belt, and a regulation member configured to regulate lateral shift of the belt in a case the belt is shifted to one side in a belt width direction that is perpendicular to a belt moving direction. The regulation member is disposed outward of an end portion of the stretching roller in the belt width direction, and the regulation member includes a first regulation portion capable of being in contact with the edge portion of the belt in a region in which the belt is wound around the stretching roller and a second regulation portion capable of being in contact with an inner peripheral surface of the belt between the first regulation portion and an end portion of the stretching roller in the belt width direction.

According to another embodiment of the present invention, a belt conveyor unit includes a movable endless belt, a pressing member, a tension roller that presses the belt in a direction from the inner peripheral surface to an outer peripheral surface of the belt, a roller that stretches the belt, and a regulation member configured to regulate lateral shift of the belt if the belt is shifted to one side in a belt width direction that is perpendicular to a belt moving direction. The regulation member is disposed outward of an end portion of the tension roller in the belt width direction, and the regulation member includes a regulation portion capable of being in contact with the edge portion of the belt in a region in which the belt is wound around the stretching roller. If the belt is laterally shifted to one side in the belt width direction, the edge portion of the belt is brought into contact with the regulation portion without inclination of a rotation shaft of the tension roller with respect to the rotation shaft of the roller so as to regulate the lateral shift of the belt.

Further features of the present invention will become apparent from the following description of exemplary embodiments with reference to the attached drawings.

BRIEF DESCRIPTION OF THE DRAWINGS

FIG. **1** is a schematic illustration of a color image forming apparatus including a belt conveyor unit according to an embodiment of the present invention.

FIG. **2** is a perspective view of an intermediate transfer unit according to a first exemplary embodiment.

FIG. **3** is a perspective view of a tension roller according to the first exemplary embodiment.

FIG. **4**A is a cross-sectional view illustrating a relationship between an inclined flange roller and a tension roller; and FIG. **4**B is an enlarged view of the inclined flange roller.

FIG. **5**A is a cross-sectional view illustrating a relationship between a flange of a comparative example and the tension roller; FIG. **5**B illustrates a bend of a belt; and FIG. **5**C illustrates buckling of the belt.

FIG. **6** is an enlarged view of the inclined flange roller and an edge portion of the belt that are in contact with each other.

FIG. **7**A is a top view illustrating a relationship between the flange of the comparative example and the tension roller; FIG. **7**B is a side view corresponding to the top view; and FIG. **7**C is a partial enlarged view of FIG. **7**B.

FIG. **8**A is a top view illustrating a relationship between the inclined flange roller and the tension roller; and FIG. **8**B is a side view corresponding to FIG. **8**A.

FIG. **9** illustrates the reaction force that the edge portion of the belt receives from the inclined flange roller according to the first exemplary embodiment.

FIG. **10** is a perspective view of the inclined flange roller and the edge portion of the belt.

FIG. **11**A is a cross-sectional view of another inclined flange roller according to the first exemplary embodiment; and FIG. **11**B is an enlarged view of the inclined flange roller.

FIG. **12**A is a cross-sectional view illustrating a relationship between an inclined flange roller and a tension roller according to a second exemplary embodiment; FIG. **12**B is an enlarged view of the inclined flange roller according to the second exemplary embodiment; and FIG. **12**C is a cross-sectional view taken along a line XIIC-XIIC of FIG. **12**A.

FIG. **13**A is a cross-sectional view illustrating an inclined flange roller according to a third exemplary embodiment; and FIG. **13**B is an enlarged view of the inclined flange roller.

FIGS. **14**A to **14**C illustrate the inclination angle α of the inclined flange roller and a gap H.

FIG. **15**A is a cross-sectional view of an inclined flange roller according to a modification of the third exemplary embodiment; and FIG. **15**B is an enlarged view of the inclined flange roller according to the modification of the third exemplary embodiment.

FIG. **16** illustrates the reaction force received by the edge portion of a belt according to the third exemplary embodiment from the inclined flange roller.

FIG. **17**A is a cross-sectional view of a flange and a tension roller according to a fourth exemplary embodiment; and FIG. **17**B is an enlarged view of the flange according to the fourth exemplary embodiment.

FIGS. **18**A and **18**B illustrate the function of a retraction surface of the flange according to the fourth exemplary embodiment.

FIG. **19**A illustrates the edge portion of the belt in contact with the inclined flange roller; FIG. **19**B is an enlarged view of the edge portion of the belt that presses the inclined flange roller; and FIG. **19**C illustrates the belt that further presses the inclined flange roller.

FIG. **20** is an enlarged view of a holding portion according to a fifth exemplary embodiment.

FIG. **21**A is an enlarged view of the edge portion of the belt in contact with the inclined flange roller; FIG. **21**B is an enlarged view of the edge portion of the belt pressing the inclined flange roller; and FIG. **21**C is an enlarged view of the edge portion of the belt further pressing the inclined flange roller.

FIG. **22**A is a cross-sectional view of another holding portion according to the fifth exemplary embodiment; FIG. **22**B is an enlarged view of the holding portion according to the fifth exemplary embodiment; and FIG. **22**C is an enlarged view of the holding portion according to the fifth exemplary embodiment.

FIG. **23**A is a cross-sectional view of a holding portion of a slider according to the fifth exemplary embodiment; and FIG. **23**B is an enlarged view of the holding portion of the slider according to the fifth exemplary embodiment.

FIG. **24** is a perspective view of the holding portion of the slider according to the fifth exemplary embodiment.

DESCRIPTION OF THE EMBODIMENTS

Exemplary embodiments of the present invention are described in detail below with reference to the accompanying drawings. Note that the dimensions, materials, shapes, and relative positions of components described in the following exemplary embodiments are to be appropriately changed in accordance with the structure and various conditions of an apparatus of the present invention. That is, the scope of the invention is not limited thereto, unless expressly specified otherwise.

First Exemplary Embodiment

Architecture of Image Forming Apparatus

FIG. **1** is a schematic illustration of an example of a color image forming apparatus. The configuration of the image forming apparatus according to the present exemplary embodiment is described below with reference to FIG. **1**. An image forming apparatus **100** can electrophotographically form an image on a transfer material P, such as a recording sheet or an OHP sheet, in accordance with a signal transmitted from an external device, such as a personal computer, connected thereto.

In the image forming apparatus **100**, a plurality of image forming units **110**Y, **110**M, **110**C, and **110**K that form yellow, magenta, cyan, and black toner images, respectively, are arranged in a line in a substantially horizontal direction. In addition, a transfer unit that serves as a belt conveyor unit is disposed so as to face the image forming units **110**Y, **110**M, **110**C, and **110**K.

According to the present exemplary embodiment, the transfer unit is formed as an intermediate transfer unit **120**. The intermediate transfer unit **120** revolvably moves an endless belt **1** (an intermediate transfer belt) that serves as an intermediate transfer member so that the image forming units **110**Y, **110**M, **110**C, and **110**K face the intermediate transfer belt **1**. The image forming units **110**Y, **110**M, **110**C, and **110**K have the same structure and operations except that the colors of formed toner images differ from one another. Hereinafter, suffixes "Y", "M", "C", and "K" of the reference numerals of the image forming units are removed, and the reference numeral represents any one of the image forming units in the case where the distinction is not needed. Thus, the common features are described.

The image forming unit **110** forms a toner image through a widely used electrophotographic image forming process. That is, the image forming unit **110** has a cylindrical electrophotographic photoconductor, that is, a photoconductive drum **111** mounted therein in a rotatable manner in a direction of the arrow in FIG. **1**. The photoconductive drum **111** serves as an image bearing member. In an image forming operation, a charging device (not illustrated) charges a surface of the photoconductive drum **111** that is rotating first. Subsequently, a laser scanner **130** serving as an exposure device emits a light beam in accordance with a signal transmitted from a computer. Thus, the laser scanner **130** serving as an exposure device performs scanning exposure on the charged photoconductive drum **111** to form an electrostatic latent image. By supplying toner serving as a development agent from a developing device **113**, the electrostatic latent image formed on the photoconductive drum **111** is visualized as a toner image. Thereafter, the toner image formed on the photoconductive drum **111** is electrostatically transferred onto the belt **1** in a primary transfer unit T**1** by the operation performed by a primary transfer roller **121** serving as a primary transfer unit disposed so as to face the photoconductive drum **111** with the belt **1** therebetween.

Through the above-described process, the toner images formed on the photoconductive drums **111** of the image forming units **110**Y, **110**M, **110**C, and **110**K are transferred onto the belt **1** one on top of the other in synchronization with the movement of the belt **1**. Thus, a color toner image is formed.

In addition, the transfer material P is fed from a transfer material container **140** by, for example, a pickup roller **141**. Thereafter, the transfer material P is delivered to a contact portion (a secondary transfer unit) T**2** formed between a secondary transfer roller **143** serving as a secondary transfer unit and the belt **1** in synchronization with the operation performed by a registration roller **142**. In this manner, the toner image on the belt **1** is electrostatically transferred onto the transfer material P through the operation performed by the secondary transfer roller **143** in the secondary transfer unit T**2**. Subsequently, the transfer material P is separated from the belt **1** and is conveyed to a fixing unit **150**, where the toner image on the transfer material P is pressed and heated. Thus, the toner image is firmly fixed onto the transfer material P. Subsequently, the transfer material P is conveyed by a discharge roller **160** and is ejected onto an ejecting tray **170**.

According to the present exemplary embodiment, the intermediate transfer unit **120** serving as the transfer unit is removable from the image forming apparatus **100**. That is, the belt conveyor unit is removable from the image forming apparatus. Alternatively, the photoconductive drum **111** and the developing device **113** of each of the image forming units **110** may be integrated with each other into a cartridge using a frame body. In this manner, the photoconductive drum **111**

and the developing device **113** may be in the form of a process cartridge that is removable from the image forming apparatus **100**.

Intermediate Transfer Unit

The structure of the intermediate transfer unit **120** is described below with reference to FIGS. **2** and **3**. FIG. **2** is an external perspective view of the intermediate transfer unit **120** according to the present exemplary embodiment. FIG. **3** is a perspective view of a tension roller **4**.

The intermediate transfer unit **120** includes the endless belt **1** and a plurality of stretching rollers for keeping the belt **1** under tension. The stretching rollers are a drive roller **2** for driving the belt **1**, a driven roller **3** that is in contact with the belt **1** which is moving and revolving around the stretching rollers and that is driven to rotate, and the tension roller **4**.

Both ends of the drive roller **2** and the driven roller **3** in the belt width direction are rotatably supported by bearings **5** (**5***a*, **5***b*) and bearings **6** (**6***a*, **6***b*), respectively. As used herein, the term "belt width direction" refers to a direction substantially perpendicular to the moving direction of the belt **1**. The bearings **5***a* and **6***a* that support the two rollers are supported by a first side plate **7***a*, and the bearings **5***b* and **6***b* that also support the two rollers are supported by a second side plate **7***b*. Upon receiving a driving force transferred from a drive source (not illustrated) disposed in the image forming apparatus **100**, the drive roller **2** rotates. When the drive roller **2** rotates, the belt **1** stretched by the drive roller **2** is moved and revolved in a direction of an arrow Bf illustrated in FIG. **2**. The driven roller **3** is in contact with the belt **1** that is rotating and, thus, is driven to rotate by the belt **1**. In addition, the driven roller **3** is maintained so as to be substantially parallel to the drive roller **2**.

The tension roller **4** is disposed so as to be movable in a direction of an arrow T (a direction from the inner peripheral surface to the outer peripheral surface of the belt). The tension roller **4** has bearings **8** (**8***a*, **8***b*) at both ends. The bearings **8** support tension roller shafts (**4***a*, **4***b*) described below. The bearings **8** are supported by sliders **9** (**9***a*, **9***b*) so as to be slidable in slit-shaped slider holding holes **10** (**10***a*, **10***b*) that are formed in the first side plate **7***a* and the second side plate **7***b*. The slider **9** is biased by tension roller biasing spring **11** (**11***a*, **11***b*) serving as a biasing unit. Thus, a tensional force is exerted on the belt **1**. The tension roller **4** is in contact with the belt **1** that is rotating so as to be driven by the belt **1** to rotate.

The belt **1** has reinforcing tape **12** (**12***a*, **12***b*), which are reinforcing members, on the outer peripheral surface thereof in the vicinity of both edges thereof in the belt width direction. The reinforcing tape **12** (**12***a*, **12***b*) extends along the substantially entire circumference of the belt **1**.

The structures of the tension roller **4** and a regulation member are described below with reference to FIGS. **4**A and **4**B. FIG. **4**A is a cross-sectional view of the tension roller **4** cut in a direction of an arrow **50** in FIG. **2** and viewed in a direction of an arrow **54** (from up to down in FIG. **2**). FIG. **4**B is an enlarged view of the left portion of the tension roller **4**. As illustrated in FIGS. **4**A and **4**B, the tension roller **4** includes a three-arrow-shaped pipe **4***c* and tension roller shafts **4***a* and **4***b* press fitted into the three-arrow-shaped pipe **4***c*. The tension roller **4** is rotatably supported by the bearings **8***a* and **8***b* at both ends so as to be rotatable about a rotation axis Q of the tension roller **4**. In addition, an inclined shaft **13** (**13***a*, **13***b*) having a shaft portion **131** inclined at an angle of $\alpha°$ with respect to the rotation axis Q of the tension roller **4** toward a direction of the arrow is disposed at each of both ends of the three-arrow-shaped pipe **4***c*. A boss portion **132** is fitted into a rotation stopper **91** of the sliders **9** so as not to rotate. The inclined shaft **13** has an inclined flange roller **14** (**14***a*, **14***b*) fitted thereinto. The inclined flange roller **14** serves as a regulation member and, thus, the inclined shaft **13** serves as a support member that supports the inclined flange roller **14**.

As illustrated in FIGS. **4**A and **4**B, the inclined flange roller **14** (**14***a*, **14***b*) is located outward of both ends of the tension roller **4** in the belt width direction. The inclined flange rollers **14** (**14***a*, **14***b*) is rotatable about a rotation axis R (Ra, Rb) different than the rotation axis Q of the tension roller **4**. As illustrated in FIG. **4**B, the inclined flange roller **14***a* is inclined so that a portion of the inclined flange roller **14***a* located on a downstream side in the moving direction Bf of the belt **1** is away from the tension roller **4** and a portion of the inclined flange roller **14***a* located on an upstream side is close to the tension roller **4**.

The inclined shaft **13** (**13***a*, **13***b*) serves as the rotation shaft of the inclined flange roller **14** (**14***a*, **14***b*). The inclined shaft **13** is positioned by being fitted into the tension roller shaft **4***a*, **4***b*. Thus, according to the present exemplary embodiment, the inclined shaft **13** can be more accurately positioned than in the case in which the tension roller shafts **4***a* and **4***b* and the inclined shaft **13** (**13***a*, **13***b*) are separately formed and positioned.

Function of Inclined Flange Roller

The inclined flange roller **14** (**14***a*, **14***b*) is configured so that if lateral shift of the belt **1** occurs in the belt width direction, a flange surface **141** serving as a first regulation portion is brought into contact with the edge of the shifted belt **1**. Since the belt **1** is brought into contact with the flange surface **141**, lateral shift of the belt **1** in the belt width direction is regulated. During the regulation, the edge of the belt **1** is maintained in contact with the flange surface **141**. Such a shape of the inclined flange roller **14** (**14***a*, **14***b*) can regulate lateral shift of the belt **1** and prevent buckling and damage of the edge of the belt **1** and, thus, a decrease in the durability of the edge of the belt **1**. How to regulate the lateral shift is described below. Note that description below is made with reference to the case in which the belt **1** is shifted to one side (e.g., in the direction of an arrow **51** in FIG. **4**A). Accordingly, description below is made with reference to the inclined flange roller **14***a*.

FIGS. **5**A to **5**C illustrate a flange **15***a* (a flange of a comparative example) disposed outward of the tension roller **4** instead of the inclined flange roller **14***a* of FIGS. **4**A and **4**B. As illustrated in FIG. **5**A, if lateral shift of the belt **1** occurs, the edge portion of the belt **1** is brought into contact with an abutment surface of the flange **15***a*. In FIG. **5**A, a gap is formed between the tension roller **4** and the flange **15***a* when the lateral shift of the belt **1** is regulated by the abutment surface. Accordingly, the belt **1** may enter the gap and, therefore, the edge portion of the belt **1** may bend as illustrated in FIG. **5**B, or buckling may occur in the edge portion of the belt **1** due to a reaction force received from the flange **15***a*, as illustrated in FIG. **5**C.

FIG. **6** is an enlarged view of the inclined flange roller **14***a* and the edge portion of the belt **1** that are in contact with each other. As illustrated in FIG. **6**, the inclined flange roller **14***a* has a roller surface **142**, which serves as a second regulation portion, between the flange surface **141** and the tension roller **4**. The roller surface **142** of the inclined flange roller **14***a* can be in contact with the inner peripheral surface of the belt **1** located in the gap formed between the flange surface **141** and the end portion of the tension roller **4** in the belt width direction. By allowing the roller surface **142** to be brought into contact with the inner peripheral surface of the belt **1**, buck-

ling occurring in the belt **1** caused by a reaction force from the flange surface **141** can be regulated when the belt **1** hits the flange surface **141**.

The advantages of the flange surface **141** of the inclined flange roller **14***a* are described below with reference to FIGS. **7**A to **7**C and FIGS. **8**A and **8**B. FIG. **7**A is a top view illustrating a relationship between the flange **15***a* and the tension roller **4**. FIG. **7**B is a side view corresponding to the top view. Part of the side view indicated by a section VIIC of FIG. **7**B is enlarged in FIG. **7**C. If, as illustrated in FIGS. **7**A to **7**C, the flange **15***a* is disposed so as to be parallel to the edge surface of the belt **1**, the belt **1** tends to be easily damaged from the edge thereof when the lateral shift of the belt **1** is regulated by the flange **15***a*.

When a force to shift the belt **1** in the direction of the arrow **51** is generated, the edge portion of the belt **1** is brought into contact with the flange **15***a* and, thus, the movement of the belt **1** is stopped. At that time, the edge portion of the belt **1** is in contact with the flange **15***a* in regions C and D. In the region C, the belt **1** is wound around the tension roller **4**. In the region D, the belt **1** is not wound around the tension roller **4**. More specifically, in the region C, the tension roller **4** is in contact with the inner peripheral surface of the belt **1** throughout the width of the tension roller **4**. In contrast, in the region D (a region other than the region C), the tension roller **4** is not in contact with the inner peripheral surface of the belt **1** throughout the width of the tension roller **4**.

If, in the region D, the edge portion of the belt **1** is in contact with the flange **15***a* for a long time or if the edge portion of the belt **1** is in contact with the flange **15***a* under a large force to shift the belt **1**, the belt **1** tends to be easily damaged from the edge thereof, since the inner peripheral surface is not supported. Such damage occurs regardless of whether the flange **15***a* is rotating. In addition, as indicated by the enlarged view of FIG. **7**C, when the flange **15***a* is rotating and if the edge portion of the belt **1** is in contact with the flange **15***a* in the region D, the edge portion of the belt **1** receives a force from the flange **15***a* in the direction of an arrow **53**. Due to the force received from the flange **15***a* in the direction of an arrow **53**, the edge portion of the belt **1** is raised. If such an operation is repeated, the belt **1** may be damaged from the edge portion thereof, or the edge portion of the belt **1** runs up onto the flange **15***a*.

FIG. **8**A is a top view illustrating a relationship between the inclined flange roller **14***a* and the tension roller **4**, and FIG. **8**B is a side view corresponding to FIG. **8**A. Like FIG. **4**B, the rotation axis Q of the inclined flange roller **14***a* is inclined with respect to the tension roller **4** in FIGS. **8**A and **8**B. Accordingly, the flange surface **141** of the inclined flange roller **14***a* is inclined with respect to the edge portion of the belt **1**. The inclined flange roller **14***a* is inclined so that the edge portion of the belt **1** is brought into contact with the flange surface **141** in only the region C when the belt **1** shifts in the direction of the arrow **51** and if the edge portion of the belt **1** hits the flange surface **141**. That is, the flange surface **141** is inclined in a direction so as not to be in contact with the edge portion of the belt **1** in the region D. Thus, the flange surface **141** can prevent the belt **1** from being damaged or from running up onto the flange **15***a* due to a rise of the edge portion of the belt **1**.

In addition, in a sub-region Ca of the region C in which the belt **1** significantly receives the tension from the tension roller **4** in the direction of an arrow T, the tightness of contact between the tension roller **4** and the inner peripheral surface of the belt **1** is higher than in the other region. Buckling can be more easily prevented under a high tightness of contact than under a low tightness of contact between the tension roller **4** and the inner peripheral surface of the belt **1**. Accordingly, since the movement of the edge portion of the belt **1** is regulated by the flange surface **141** of the inclined flange roller **14***a* in the sub-region Ca in which the tightness of contact is high, the lateral shift of the belt can be regulated without the occurrence of buckling.

In addition, the inner peripheral surface of the belt **1** located in the gap between the tension roller **4** and the flange surface **141** in the sub-region Ca in which the tightness of contact is high can be regulated using the roller surface **142**. Accordingly, even when the edge portion of the belt **1** starts to bend in the sub-region Ca in which buckling negligibly occurs, buckling can be reliably prevented since the roller surface **142** regulates the movement of the inner peripheral surface of the belt **1**.

Furthermore, by using the flange surface **141** that is inclined, curling of the edge portion of the belt **1** can be prevented. FIG. **9** illustrates the reaction force that the edge portion of the belt **1** receives from the flange surface. As illustrated in FIG. **9**, if the belt **1** is laterally shifted, the belt **1** receives a reaction force F from the flange surface **141**. Since the flange surface **141** is inclined, the reaction force F is divided into an x-direction component Fx and a y-direction component Fy. Due to the y-direction component Fy, the belt **1** is pressed against the tension roller **4** and, thus, curling of the belt **1** can be prevented.

FIG. **10** is a perspective view of the inclined flange roller **14***a* and the edge portion of the belt **1**. As illustrated in FIG. **10**, the inclined flange roller **14***a* is rotatably attached to the inclined shaft **13***a*. Accordingly, the inclined flange roller **14***a* is driven to rotate by the belt **1**. Thus, when the flange surface **141** is bought into contact with the edge portion of the belt **1**, sliding friction is negligibly generated. As a result, damage of the belt **1** caused by scraping of the edge portion of the belt **1** can be prevented.

While the present exemplary embodiment has been described with reference to the belt **1** laterally shifted in the direction of the arrow **51**, lateral shift of the belt **1** in the direction of an arrow **52** can be also regulated by the inclined flange roller **14***b*, since the inclined flange rollers **14** are provided at either end of the tension roller **4**. Note that the inclined flange roller **14***b* is provided so as to be bilaterally symmetrical with respect to the inclined flange roller **14***a* and has a function similar to the inclined flange roller **14***a*.

While the present exemplary embodiment has been described with reference to the intermediate transfer unit **120** including three rollers, the present exemplary embodiment is applicable to an intermediate transfer unit including three or more rollers. According to the present exemplary embodiment, the intermediate transfer unit **120** can include at least two rollers, that is, the drive roller **2** and the tension roller **4**.

In addition, the present exemplary embodiment is applicable to the tension roller **4** having a length that is longer than the length of the belt **1** in the belt width direction, as illustrated in FIG. **11**A. As illustrated in FIG. **11**B, by extending an end surface **41** of the tension roller **4** to a position indicated by a dotted line **42**, that is, the position of the flange surface **141**, the tension roller can function as the roller surface **142** of the inclined flange roller **14**. However, it is difficult to completely remove the gap formed between the tension roller **4** and the inclined flange roller **14**. The gap may cause buckling. Accordingly, if the flange surface **141** and the roller surface **142** are formed so as to be integrated with each other and, thus, the flange surface **141** is seamlessly connected to the roller surface **142**, buckling is more easily prevented.

As described above, according to the present exemplary embodiment, by using the inclined flange rollers **14***a* and **14***b*

provided at either end of the tension roller **4**, the lateral shift of the belt can be regulated without a decrease in the durability of the edge portion of the belt **1**.

Second Exemplary Embodiment

According to the first exemplary embodiment, the lateral shift of the belt is regulated by using the inclined flange rollers **14***a* and **14***b* that are rotatable independently from the tension roller **4**. In contrast, according to the present exemplary embodiment, the inclined flange rollers **14***a* and **14***b* are rotatable in synchronization with the rotation of the tension roller **4**. Note that since the other structures are similar to those of the image forming apparatus according to the first exemplary embodiment, the same numbering is used for similar components of the present exemplary embodiment in the following description.

FIG. **12**A is a cross-sectional view of a tension roller **4** according to the second exemplary embodiment. By causing the inclined flange roller **14** of the first exemplary embodiment to rotate in synchronization with the rotation of the tension roller **4**, the inclined flange roller **14** and the tension roller **4** are rotatable at the same angular velocity. FIG. **12**B is an enlarged view of a left section of the tension roller **4** in FIG. **12**A. FIG. **12**C is a cross-sectional view taken along a line XIIC-XIIC of FIG. **12**A.

The inclined shaft **13***a* having a shaft portion **131** inclined at an angle of α° with respect to the rotation axis Q of the tension roller **4** toward a direction of the arrow is disposed by fitting the boss portion **132** into the rotation stopper **91** of a slider **9***a*. Thus, rotation of the inclined shaft **13***a* is stopped. In addition, the inclined flange roller **14***a* is fitted into the inclined shaft **13***a*. Furthermore, the inclined flange roller **14***a* has bosses **143**. By fitting one side of the three-arrow-shaped pipe **4***c* of the tension roller **4** between the bosses **143**, the inclined flange roller **14***a* can receive a rotary force from the three-arrow-shaped pipe **4***c*. Thus, the inclined flange roller **14***a* is rotatable together with the tension roller **4**. At that time, the tension roller **4** rotates about the rotation axis Q, and the inclined flange roller **14** rotates about the rotation axis R as if the tension roller **4** and the inclined flange roller **14** are connected using a universal joint. In this manner, the tension roller **4** and the inclined flange roller **14** rotate about different rotation axes.

According to the first exemplary embodiment, the inclined flange roller **14** is disposed so as to be rotatable with respect to the tension roller **4**. Accordingly, the inclined flange roller **14** starts rotating when the edge portion of the belt **1** is brought into contact with the roller surface **142** or the flange surface **141**. Thus, if some load (e.g., the sliding load with the inclined shaft **13**) is imposed on the inclined flange roller **14**, the speed of the edge portion of the belt **1** may differ from the speed of the flange surface **141**.

Such a difference in speed may cause sliding friction between the inclined flange roller **14** and the belt **1**. If the sliding friction is large, the edge portion of the belt **1** may be scraped off and be damaged.

According to the present exemplary embodiment, the bosses **143** are provided on the inclined flange roller **14**, and a rotational driving force is applied from the tension roller **4** to the inclined flange roller **14**. Accordingly, the belt **1** can rotate at the same speed as the inclined flange roller **14** without being in contact with the inclined flange roller **14**. As a result, even when some rotational load is imposed on the inclined flange roller **14**, the sliding friction between the edge portion of the belt **1** and the inclined flange roller **14** can be removed.

As described above, according to the present exemplary embodiment, a decrease in the durability of the edge portion of the belt **1** can be more reduced than in the first exemplary embodiment.

Third Exemplary Embodiment

The first exemplary embodiment has been described with reference to regulation of the lateral shift of the belt **1** using the inclined flange rollers **14***a* and **14***b* that can rotate independently from the tension roller **4**. In contrast, according to the present exemplary embodiment, a decrease in the durability of the belt **1** is reduced more than in the first exemplary embodiment by changing the shape of the inclined flange rollers **14***a* and **14***b*. Note that since the other structures are similar to those of the image forming apparatus according to the first exemplary embodiment, the same numbering is used for similar components of the present exemplary embodiment in the following description.

FIG. **13**A is a cross-sectional view of a configuration in which an inclined flange roller **16** (**16***a*, **16***b*) is employed instead of the inclined flange roller **14** (**14***a*, **14***b*). FIG. **13**B is an enlarged view of the left section of FIG. **13**A. The inclined flange roller **16** has a roller surface **162** inclined at an angle of α° with respect to a rotation axis Ra.

FIGS. **14**A to **14**C illustrate the inclination angle α of the inclined flange roller **14** and a gap H. As illustrated in FIG. **14**A, the gap H formed between the belt **1** and the roller surface **142** increases with increasing inclination angle α of the inclined flange roller **14**. When the gap H is large and if the belt **1** is shifted toward the roller surface **142**, the inner peripheral surface of the belt **1** is not supported by the roller surface **142** and, thus, the occurrence of buckling cannot be prevented. To solve such a problem, as illustrated in FIG. **14**B, the inclined flange roller **14** can be moved in the direction of the arrow T so that an end Z of the roller surface **142** that is adjacent to a tension roller is set at a position X**0**. In this manner, the gap H disappears, and bucking negligibly occurs. However, the roller surface **142** protrudes from the position X**0** in the direction of the arrow T (a biasing direction) and, thus, the tension applied to the belt **1** is localized to the contact portion of the flange. Accordingly, the edge surface of the belt **1** is damaged. At that time, the position of a surface of the tension roller **4** in the biasing direction is defined as X**0**.

Accordingly, the shape of the inclined flange roller **14** is determined as the shape of the inclined flange roller **16** according to the present exemplary embodiment so that the gap H is filled. The shape is illustrated in FIG. **14**C. To form the shape, the roller surface **162** serving as a second regulation portion of the inclined flange roller **16** is inclined at an angle of α° with respect to the rotation axis Ra, and the rotation axis Ra of the inclined flange roller **16** is inclined at an angle of α° with respect to the rotation axis Q of the tension roller **4**. As illustrated in FIG. **14**C, in the inclined flange roller **16**, the angle formed by the flange surface **141** and the roller surface **162** is 90 degree and less. By using the inclined flange roller **16** having such a structure, the roller surface **162** can be located inward of the position X**0** in the biasing direction T, the gap H illustrated in FIG. **14**A can be removed, and buckling can be easily prevented. In addition, the tension (the pressure) applied to the tension roller **4** is uniform along the belt width direction and, therefore, the tension is not localized.

A modification of the present exemplary embodiment is described below. FIG. **15**A is a cross-sectional view of the structure in which an inclined flange roller **17** (**17***a*, **17***b*) is provided instead of the inclined flange roller **16** (**16***a*, **16***b*).

FIG. **15**B is an enlarged view of the left section of FIG. **15**A. The inclined flange roller **17***a* has a flange surface **171** inclined toward a roller surface **172** at an angle of β°.

As described above, the first exemplary embodiment has an advantage in that curling of the belt **1** can be prevented by inclining the flange surface **141** of the inclined flange roller **14**. However, in order to increase the inclination angle, the inclined flange roller **14** needs to be significantly inclined. To dispose the inclined flange roller **14**, a space for the inclined flange roller **14** is needed in the axis direction. Thus, as illustrated in FIG. **14**A, the gap H is increased and, therefore, buckling easily occurs.

Accordingly, a structure in which even when the inclination angle of the rotation axis Ra of the inclined flange roller **17** is the same as in the above-described exemplary embodiment as illustrated in FIG. **15**A, curling and buckling negligibly occur is described below with reference to FIGS. **15**B and **16**.

As illustrated in FIG. **16**, a flange surface **171** inclined at an angle of β° toward the roller surface **172** is provided. As a result, if the belt **1** is shifted toward the flange surface **171**, the belt **1** receives a reaction force F from the flange surface **171**. The reaction force F can be divided into an x-direction component Fx and a y-direction component Fy. Since the flange surface **171** is inclined at an angle of β°, the y-direction component Fy that presses the belt **1** against the roller surface **172** is given as follows:

$$Fy=F\sin(\alpha+\beta).$$

As a result, in the range of $0<\alpha+\beta<90°$, the force Fy that presses the belt **1** against the roller surface **172** can be increased by providing the inclination of an angle of β° and, thus, buckling can be easily prevented.

In addition, the rotation axis Ra of the inclined flange roller **17***a* is inclined at an angle of α°, so that the flange surface **171** is inclined at an angle of β° and the edge portion of the belt **1** is in contact with the flange surface **171**.

As described above, according to the present exemplary embodiment, a decrease in the durability of the edge portion of the belt **1** is reduced more than in the first exemplary embodiment

Fourth Exemplary Embodiment

According to the first exemplary embodiment, lateral shift of the belt **1** is regulated by using the inclined flange rollers **14***a* and **14***b* that are rotatable independently from the tension roller **4**. In contrast, according to the present exemplary embodiment, lateral shift of the belt is regulated by using a flange having a shape that differs from the shape of the inclined flange rollers **14***a* and **14***b*. Note that since the other structures are similar to those of the image forming apparatus according to the first exemplary embodiment, the same numbering is used for similar components of the present exemplary embodiment in the following description.

FIG. **17**A is a cross-sectional view of the tension roller **4** according to the present exemplary embodiment. The inclined flange roller **14** (**14***a*, **14***b*) is replaced with a flange **18** (**18***a*, **18***b*). FIG. **17**B is an enlarged view of the left section of FIG. **17**A. The flange **18***a* is fitted into the tension roller shaft **4***a*, and the rotation of the flange **18***a* is stopped by a boss **184**. Accordingly, the flange **18***a* remains unrotated without using the inclined shaft **13***a* of the first exemplary embodiment. The inclined flange **18***a* has a flange surface **181** capable of being in contact with the edge portion of the belt **1**, a roller surface **182** capable of being in contact with the inner peripheral surface of the belt **1**, and a retraction surface **183**. The flange surface **181** and the roller surface **182** have functions that are the same as those of the flange surface **141** and the roller surface **142** of the inclined flange roller **14***a*, respectively.

FIGS. **18**A and **18**B illustrate the function of the retraction surface **183** of the flange **18***a*. FIG. **18**A is a top view illustrating a relationship between the flange **18***a* and the tension roller **4** and a side view corresponding to the top view. FIG. **18**B is a perspective view illustrating a relationship between the retraction surface **183** and the edge portion of the belt **1**.

If the belt **1** is laterally shifted in the direction of the arrow **51**, the edge portion of the belt **1** in the sub-region Ca is brought into contact with the flange surface **181** of the inclined flange **18***a*. The retraction surface **183** of the flange **18***a* is retracted outwardly in the belt width direction so as not to be in contact with the edge portion of the belt **1** in a sub-region Cb. By causing the retraction surface **183** to retract, lateral shift of the belt **1** can be prevented while preventing a decrease in the durability of the edge portion of the belt **1** without rotating the flange **18***a*, as in the first exemplary embodiment.

Fifth Exemplary Embodiment

According to the first exemplary embodiment, lateral shift of the belt is regulated using the inclined flange rollers **14***a* and **14***b* that are rotatable independently from the tension roller **4**. In contrast, the present exemplary embodiment is characterized in that the inclined shaft **13** (**13***a*, **13***b*) has an angle regulation surface serving as a holding portion that regulates the angle of the inclined flange roller **14***a*, **14***b*. Note that since the other structures are similar to those of the image forming apparatus according to the first exemplary embodiment, the same numbering is used for similar components of the present exemplary embodiment in the following description.

FIGS. **19**A to **19**C illustrate the belt **1** that is moved in the direction of the arrow **51** and is brought into contact with the inclined flange roller **14***a*. The inclined flange roller **14***a* is pressed by a force F of lateral shifting of the belt **1** and is brought into contact with the inclined shaft **13***a* at a point D. At that time, a rotational moment about the point D acting as the fulcrum is produced on the inclined flange roller **14***a* in the direction of an arrow M, where the point of effort is a point C. Thus, the inclined flange roller **14***a* starts to rotate.

FIG. **19**B illustrates the belt **1** and the inclined flange roller **14***a* at the moment when the inclination angle of the inclined flange roller **14***a* reaches zero. At that time, a gap D formed between the edge surface of the belt **1** and the flange surface **141** in FIG. **19**B disappears.

FIG. **19**C illustrates the belt **1** and the inclined flange roller **14***a* after the inclined flange roller **14***a* further rotates. As illustrated in FIG. **19**C, the flange surface **141** bites into the belt **1** upstream of the contact portion between the edge surface of the belt **1** and the flange surface **141**. From this point, the belt **1** may run up onto the flange, or damage of the edge portion of the belt **1** may occur. In addition, if the force F of lateral shifting continues to be applied, scraping may occur at the points D and E due to the rotational moment in the direction of the arrow M, where the point of effect is the point E. Furthermore, the inclined flange roller **14***a* leans toward the side on which the flange surface **141** bites into the belt **1**.

As described above, if the inclined flange roller **14***a* is brought into contact with the inclined shaft **13***a* at the point D, that is, a point inward of the point C at which the edge portion of the belt **1** is brought into contact with the inclined flange roller **14***a* (in the radial direction of the tension roller), the

rotational moment is produced so that the inclination angle diminishes. As a result, the inclination angle of the inclined flange roller **14***a* is changed and, thus, it may be difficult to regulate the lateral shift of the edge portion of the belt **1** using the inclined flange roller **14***a*. That is, when the belt **1** is laterally shifted, the edge portion of the belt **1** may be brought into contact with the inclined flange roller **14***a* even in a portion in which buckling of the edge portion of the belt **1** and running up of the belt **1** onto the flange easily occur (a region outside the region in which the belt **1** is wound around the tension roller **4**).

Therefore, the present exemplary embodiment is characterized in that the inclination angle of the inclined flange roller **14***a* is regulated. FIG. **20** illustrates the structure of the holding portion that regulates the inclination angle of the inclined flange roller **14***a*. As illustrated in FIG. **20**, the inclined shaft **13***a* has an angle regulating surface **133** that serves as a contact surface with the inclined flange roller **14***a* and that serves as a regulation portion for regulating the inclination angle of the inclined flange roller **14***a*. The inclination angle is α° from a line perpendicular to the rotation axis Q of the tension roller **4**. In addition, a flange contact surface **143** that is in contact with the angle regulating surface **133** is provided on the side adjacent to the inclined shaft **13***a* of the inclined flange roller **14***a*. An outermost edge point D of the flange contact surface **143** in the radial direction is located outward from a point C at which the belt **1** is in contact with the flange surface **141** to receive a force of lateral shifting in the radial direction. That is, let Rc be the distance from the rotation axis Ra of the inclined flange roller **14***a* to the point C, and let Rd be the distance from the rotation axis Ra to the point D. Then, Rd>Rc. At that time, the angle regulating surface **133** extends beyond the distance Rd so as to be in contact with the point D of the flange contact surface **143**.

The movement of the inclined flange roller **14***a* when the inclined flange roller **14***a* receives the force of lateral shifting from the belt **1** is described next with reference to FIGS. **21**A, **21**B, and **21**C. FIGS. **21**A, **21**B, and **21**C are cross-sectional views of the holding portion.

FIG. **21**A illustrates the inclined flange roller **14***a* located at a given position due to, for example, a gap between the inclined flange roller **14***a* and the inclined shaft **13***a*. At that time, the belt **1** moves in a direction of the arrow **51** and is brought into contact with the flange surface **141** at the point C. Thus, the inclined flange roller **14***a* is pressed in the direction of the arrow **51**. As a result, as illustrated in FIG. **21**B, the point D in the outermost edge portion of the flange contact surface **143** of the inclined flange roller **14***a* is brought into contact with the angle regulating surface **133** of the inclined shaft **13***a*. At that time, a rotational moment in a direction of an arrow N is produced about the fulcrum defined by the point D that contacts the angle regulating surface **133** first, where the point of effect is the point C at which the force F of lateral shifting is received. Thus, the inclined flange roller **14***a* rotates in the direction of the arrow N. According to the present exemplary embodiment, since the point D is located outward from the point C in the radial direction, the inclined flange roller **14***a* rotates in a direction opposite to the rotational direction of the rotational moment produced in the structure illustrated in FIGS. **19**A to **19**C, due to the positional relationship between the fulcrum and the point of effect.

As a result, as illustrated in FIG. **21**C, the inclined flange roller **14***a* rotates in the direction of an arrow N and is brought into contact with the angle regulating surface **133** at a point H. Thus, the rotation of the inclined flange roller **14***a* is stopped. That is, the inclination angle of the inclined flange roller **14** is regulated by the angle regulating surface **133**. In addition, since a rotational moment is not in effect, the contact region between the inclined flange roller **14** and the edge portion of the belt **1** can be maintained within a desired region (i.e., within the region in which the belt **1** is wound around the flange). By maintaining the inclination angle of the inclined flange roller **14** with a simplified structure, damage of the belt **1** can be prevented.

While the present exemplary embodiment has been described with reference to the belt **1** laterally shifted in the direction of the arrow **51**, lateral shift of the belt **1** in the direction of an arrow **52** can be also regulated by the inclined flange roller **14***b*, since the inclined flange rollers **14** are provided at either end of the tension roller **4**. Note that the inclined flange roller **14***b* is provided so as to be bilaterally symmetrical with respect to the inclined flange roller **14***a* and has a function similar to the inclined flange roller **14***a*.

While the present exemplary embodiment has been described with reference to the inclined shafts **13***a* and **13***b* each having the holding portion, a member other than the inclined shafts **13***a* and **13***b* may have the holding portion.

FIGS. **22**A to **22**C illustrate a structure in which the slider **9** serving as the holding member that supports the tension roller **4** via a bearing has a holding portion. FIG. **22**A is a cross-sectional view of the tension roller **4**. FIGS. **22**B and **22**C are enlarged views of the left end section of FIG. **22**A. The tension roller **4** is supported by the bearings **8** located at both ends thereof. The tension roller **4** is rotatable about the rotation axis Q. At both ends of the three-arrow-shaped pipe **4***c*, the inclined shaft **13***a* having the shaft portion **131** inclined from the rotation axis Q of the tension roller **4** at an angle of α° in the direction of an arrow is disposed so that the boss portion **132** is fitted into the rotation stopper **91** of the sliders **9**. Thus, the rotation of the inclined shaft **13***a* is stopped. The inclined flange roller **14***a* is fitted into the inclined shaft **13**. Accordingly, the inclined flange roller **14** is rotatable about the rotation axis Ra which is different than the rotation axis Q of the tension roller **4**.

In addition, the slider **9***a* has an angle regulating surface **93** serving as a holding portion that serves as a contact surface with the inclined flange roller **14***a* and that regulates the inclination angle of the inclined flange roller **14***a*. The inclination angle is α° from a line perpendicular to the rotation axis Q of the tension roller **4**. In addition, a flange contact surface **143** that is in contact with the angle regulating surface **93** is provided on the surface of the inclined flange roller **14***a* adjacent to the sliders **9**.

The outermost edge point D of the flange contact surface **143** in the radial direction is located outward from a point C at which the belt **1** is in contact with the flange surface **141** to receive a force of lateral shifting in the radial direction. That is, let Rc be the distance from the rotation axis Ra of the inclined flange roller **14***a* to the point C, and let Rd be the distance from the rotation axis Ra to the point D. Then, Rd>Rc. At that time, the angle regulating surface **93** extends beyond the distance Rd so as to be in contact with the point D of the flange contact surface **143**. As a result, even when the inclined flange roller **14***a* receives the force of lateral shifting from the belt **1**, the inclined flange roller **14***a* rotates about the point D as the fulcrum and is brought into contact with the angle regulating surface **93** of the sliders **9** at the point H. Thus, the inclination angle can be maintained.

As illustrated in FIGS. **23**A and **23**B and FIG. **24**, the holding portion of the sliders **9** needs not be in contact with the flange contact surface **143** of the inclined flange roller **14** throughout the circumferential direction. FIG. **23**A is a cross-sectional view of the tension roller **4** according to a modification of the present exemplary embodiment, and FIG. **23**B is

an enlarged view of the left end section of FIG. **23**A. FIG. **24** is a perspective view of the left end section of FIG. **23**B.

As illustrated in FIGS. **23**A and **23**B and FIG. **24**, as a holding portion, angle regulating surfaces **931**, **932**, and **933** that are in contact with the inclined flange roller **14***a* are provided on the sliders **9** that supports the tension roller **4** via the bearings **8**. When the inclined flange roller **14***a* receives the force of lateral shifting from the belt **1**, a rotational moment about the point D acting as the fulcrum is produced, where the point C acts as the point of effect, as illustrated in FIG. **23**B. Thereafter, as illustrated in FIG. **24**, the flange contact surface **143** of the inclined flange roller **14***a* is brought into contact with points I and J that act as the points of load of the angle regulating surfaces **932** and **933**. Thus, the inclination angle is regulated. At that time, the points I and J that act as the points of load are located on the opposite side of the axis of the inclined flange roller **14***a* from the point of effect. In this manner, even when, like the angle regulating surface **93** of FIGS. **23**A and **23**B, the flange contact surface **143** of the inclined flange roller **14** is not in contact with the angle regulating surface **93** throughout the circumferential direction, the inclination angle can be maintained if the flange contact surface **143** is in contact with at least three angle regulating surfaces **931**, **932**, and **933**.

Other Exemplary Embodiments

While the above exemplary embodiments have been described with reference to the intermediate transfer unit serving as the belt conveyor unit, the present invention is not limited thereto. The belt of the belt conveyor unit may be a photoconductor belt on which an electrostatic latent image is formed, a transfer material conveyance belt that conveys a transfer material, or a fixing belt that fixes a toner image onto a transfer material. In addition, the belt conveyor unit according to the above-described exemplary embodiments may be employed for apparatuses other than an image forming apparatus, such as belt conveyors.

While the present invention has been described with reference to exemplary embodiments, it is to be understood that the invention is not limited to the disclosed exemplary embodiments. The scope of the following claims is to be accorded the broadest interpretation so as to encompass all such modifications and equivalent structures and functions.

This application claims the benefit of Japanese Patent Application No. 2013-102397 filed May 14, 2013 and No. 2013-256385 filed Dec. 11, 2013, which are hereby incorporated by reference herein in their entirety.

What is claimed is:

1. A belt conveyor unit comprising:

a movable endless belt;

a stretching roller configured to stretch the belt; and

a regulation member configured to regulate lateral shift of the belt in a case the belt is shifted to one side in a belt width direction that is perpendicular to a belt moving direction,

wherein the regulation member is disposed outward of an end portion of the stretching roller in the belt width direction, and

wherein the regulation member includes a first regulation portion opposing an edge portion of the belt with respect to a width direction of the belt and a second regulation portion capable of being in contact with an inner peripheral surface of the belt between the first regulation portion and the end portion of the stretching roller in the belt width direction,

wherein the first regulation portion comprises:

a contact portion contactable to the edge portion of the belt corresponding to a first region of the belt wound around the stretching roller; and

a non-contact portion not in contact with the edge portion of the belt corresponding to a second region of the belt not wound around the stretching roller.

2. The belt conveyor unit according to claim **1**,

wherein each of the contact portion and the non-contact portion is a common surface that faces the edge portion of the belt, and

wherein the common surface is inclined with respect to the edge portion of the belt so as not to be in contact with the edge portion of the belt in the second region.

3. The belt conveyor unit according to claim **1**, further comprising:

a pressing member configured to press the stretching roller,

wherein the stretching roller is formed as a tension roller that press the belt in a direction from the inner peripheral surface to an outer peripheral surface of the belt.

4. The belt conveyor unit according to claim **3**, further comprising:

a bearing configured to support a tension roller shaft of the tension roller; and

a support member configured to support the regulation member between the bearing and the tension roller in the belt width direction,

wherein the support member includes a shaft portion inclined with respect to the tension roller shaft, and the regulation member is a rotary member rotatable about the shaft portion.

5. The belt conveyor unit according to claim **4**,

wherein the rotary member includes a first surface serving as the first regulation portion and a second surface serving as the second regulation portion, and the first surface and the second surface are integrally formed so as to be seamlessly connected to each other.

6. The belt conveyor unit according to claim **4**,

wherein the rotary member rotates at the same angular speed as the tension roller.

7. The belt conveyor unit according to claim **3**,

wherein the second regulation portion is located inward of a surface of the tension roller that is in contact with the inner peripheral surface of the belt in a pressing direction of the pressing member.

8. The belt conveyor unit according to claim **5**,

wherein an angle formed by the first surface and the second surface is 90 degrees or less.

9. The belt conveyor unit according to claim **1**,

wherein the belt has reinforcement tapes bonded onto the outer peripheral surfaces of both edge portions in the belt width direction.

10. The belt conveyor unit according to claim **1**, further comprising:

a holding portion configured to be in contact with the regulation member and maintain a position of the regulation member in the belt width direction.

11. The belt conveyor unit according to claim **10**,

wherein the holding portion is located outward of the regulation member in the belt width direction and is in contact with the regulation member outward of a position at which the belt is in contact with the regulation member in a radial direction of the stretching member.

12. The belt conveyor unit according to claim 11, further comprising:

a pressing member configured to press the stretching roller,

wherein the stretching roller is formed as a tension roller that press the belt in a direction from the inner peripheral surface to an outer peripheral surface of the belt.

13. The belt conveyor unit according to claim 10, further comprising:

a bearing configured to support a tension roller shaft of the tension roller; and

a support member configured to support the regulation member between the bearing and the tension roller in the belt width direction,

wherein the support member includes a shaft portion inclined with respect to the tension roller shaft, and the holding portion serves as the shaft portion.

14. The belt conveyor unit according to claim 13, further comprising:

a holding member configured to hold the stretching roller, and the holding member includes the holding portion.

15. An image forming apparatus comprising:

a plurality of image bearing members configured to bear toner images of different colors;

a movable endless belt configured to transfer the toner images from the image bearing members to a transfer material;

a stretching roller configured to stretch the belt; and

a regulation member configured to regulate lateral shift of the belt if the belt is shifted to one side in a belt width direction that is perpendicular to a belt moving direction,

wherein the regulation member is located outward of an end portion of the stretching roller in the belt width direction, and

wherein the regulation member includes a first regulation portion opposing an edge portion of the belt with respect to a width direction of the belt and a second regulation portion capable of being in contact with an inner peripheral surface of the belt between the first regulation portion and the end portion of the stretching roller in the belt width direction,

wherein the first regulation portion comprises:

a contact portion contactable to the edge portion of the belt corresponding to a first region of the belt wound around the stretching roller; and

a non-contact portion not in contact with the edge portion of the belt corresponding to a second region of the belt not wound around the stretching roller.

16. The image forming apparatus according to claim 15,

wherein each of the contact portion and the non-contact portion is a common surface that faces the edge portion of the belt, and

wherein the common surface is inclined with respect to the edge portion of the belt so as not to be in contact with the edge portion of the belt in the second region.

17. The image forming apparatus according to claim 15, further comprising:

a pressing member configured to press the stretching roller,

wherein the stretching roller is formed as a tension roller that press the belt in a direction from the inner peripheral surface to an outer peripheral surface of the belt.

18. The image forming apparatus according to claim 17, further comprising:

a bearing configured to support a tension roller shaft of the tension roller; and

a support member configured to support the regulation member between the bearing and the tension roller in the belt width direction,

wherein the support member includes a shaft portion inclined with respect to the tension roller shaft, and the regulation member is a rotary member rotatable about the shaft portion.

19. The image forming apparatus according to claim 18,

wherein the rotary member includes a first surface serving as the first regulation portion and a second surface serving as the second regulation portion, and the first surface and the second surface are integrally formed so as to be seamlessly connected to each other.

20. The image forming apparatus according to claim 17,

wherein the rotary member rotates at the same angular speed as the tension roller.

21. The image forming apparatus according to claim 17,

wherein the second regulation portion is located inward of a surface of the tension roller that is in contact with the inner peripheral surface of the belt in a pressing direction of the pressing member.

22. The image forming apparatus according to claim 19,

wherein an angle formed by the first surface and the second surface is 90 degrees or less.

23. The image forming apparatus according to claim 15,

wherein the belt has reinforcement tapes bonded onto the outer peripheral surfaces of both edge portions in the belt width direction.

24. The image forming apparatus according to claim 15, further comprising:

a holding portion configured to be in contact with the regulation member and maintain a position of the regulation member in the belt width direction.

25. The image forming apparatus according to claim 24,

wherein the holding portion is located outward of the regulation member in the belt width direction and is in contact with the regulation member outward of a position at which the belt is in contact with the regulation member in a radial direction of the stretching member.

26. The image forming apparatus according to claim 25, further comprising:

a pressing member configured to press the stretching roller,

wherein the stretching roller is formed as a tension roller that press the belt in a direction from the inner peripheral surface to an outer peripheral surface of the belt.

27. The image forming apparatus according to claim 26, further comprising:

a bearing configured to support a tension roller shaft of the tension roller; and

a support member configured to support the regulation member between the bearing and the tension roller in the belt width direction,

wherein the support member includes a shaft portion inclined with respect to the tension roller shaft, and the holding portion serves as the shaft portion.

28. The image forming apparatus according to claim 24, further comprising:

a holding member configured to hold the stretching roller, and the holding member includes the holding portion.

* * * * *