US009963919B2

(12) **United States Patent**
Sugiura et al.

(10) **Patent No.: US 9,963,919 B2**
(45) **Date of Patent: May 8, 2018**

(54) **LOCKING DEVICE**

(71) Applicant: **SHIROKI CORPORATION**, Fujisawa-shi (JP)

(72) Inventors: **Saiki Sugiura**, Fujisawa (JP); **Hiroyuki Suzuki**, Fujisawa (JP)

(73) Assignee: **SHIROKI CORPORATION**, Fujisawa-Shi, Kanagawa (JP)

(*) Notice: Subject to any disclaimer, the term of this patent is extended or adjusted under 35 U.S.C. 154(b) by 67 days.

(21) Appl. No.: **14/772,879**

(22) PCT Filed: **Mar. 3, 2014**

(86) PCT No.: **PCT/JP2014/055253**
§ 371 (c)(1),
(2) Date: **Sep. 4, 2015**

(87) PCT Pub. No.: **WO2014/136713**
PCT Pub. Date: **Sep. 12, 2014**

(65) **Prior Publication Data**
US 2016/0010370 A1 Jan. 14, 2016

(30) **Foreign Application Priority Data**
Mar. 7, 2013 (JP) 2013-045004

(51) **Int. Cl.**
E05C 3/06 (2006.01)
E05C 3/30 (2006.01)
(Continued)

(52) **U.S. Cl.**
CPC ***E05C 3/30*** (2013.01); ***B60N 2/01583*** (2013.01); ***E05B 85/26*** (2013.01); ***E05C 3/002*** (2013.01);
(Continued)

(58) **Field of Classification Search**
CPC Y10T 292/1043; Y10T 292/1047; Y10T 292/1078; B60N 2/01516; B60N 2/01541;
(Continued)

(56) **References Cited**

U.S. PATENT DOCUMENTS

6,945,585 B1 * 9/2005 Liu B60N 2/01583 292/216
7,959,205 B2 * 6/2011 Paing B60N 2/01583 296/65.03
(Continued)

FOREIGN PATENT DOCUMENTS

JP S 57-34292 Y2 7/1982
JP 4862615 B2 1/2012
WO WO 2013120185 A9 * 2/2014 ..... E05B 77/38

OTHER PUBLICATIONS

International Search Report (ISR) (PCT Form PCT/ISA/210), in PCT/JP2014/055253, dated May 20, 2014.

Primary Examiner — Alyson M Merlino
(74) *Attorney, Agent, or Firm* — McGinn IP Law Group, PLLC

(57) **ABSTRACT**

A locking device provided with: a striker-contact member (**201**) which is positioned on a hook (**157**) and is abutted against a striker being entered the groove (**157***a*) of the hook (**157**) so as to sandwich the striker in cooperation with the groove (**157***a*) of the hook (**157**); and a spring (hook-biasing member) (**171**) that urges the hook (**157**) in the unlocked position direction via the striker-contact member (**201**) and that urges the striker-contact member (**201**) in a direction a direction to be abutted against the striker.

12 Claims, 9 Drawing Sheets

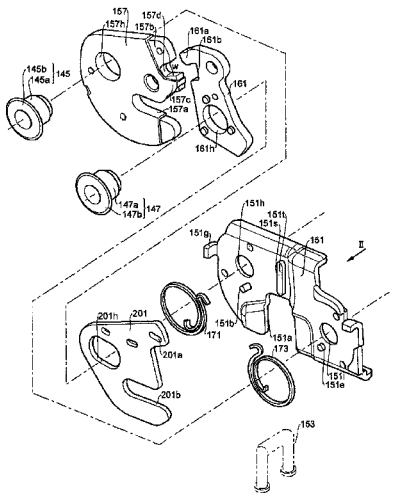

Provisur EX1051
U.S. Patent No. 9,457,487

(51) **Int. Cl.**

B60N 2/015	(2006.01)
E05B 85/26	(2014.01)
E05C 3/00	(2006.01)
E05C 3/12	(2006.01)
B60N 2/02	(2006.01)
E05B 77/38	(2014.01)
E05B 15/04	(2006.01)

(52) **U.S. Cl.**
CPC ***E05C 3/124*** (2013.01); *E05B 77/38* (2013.01); *E05B 2015/042* (2013.01)

(58) **Field of Classification Search**
CPC B60N 2/0155; B60N 2/2245; B60N 2/01583; B60N 2/305; E05B 77/36; E05B 77/38; E05B 85/20; E05B 85/24; E05B 85/26; E05C 3/20; E05C 3/124; E05C 3/30; E05C 3/002
USPC 297/336, 378.11, 378.12, 378.13; 296/65.03, 65.16, 65.17
See application file for complete search history.

(56) **References Cited**

U.S. PATENT DOCUMENTS

8,128,135	B2 *	3/2012	Maeta	B60N 2/01583 292/216
2010/0026013	A1 *	2/2010	Otsuka	B60N 2/01583 292/121
2010/0032967	A1 *	2/2010	Otsuka	B60N 2/01583 292/240
2013/0129413	A1 *	5/2013	Dryburgh	B60N 2/01583 403/316

* cited by examiner

FIG.1

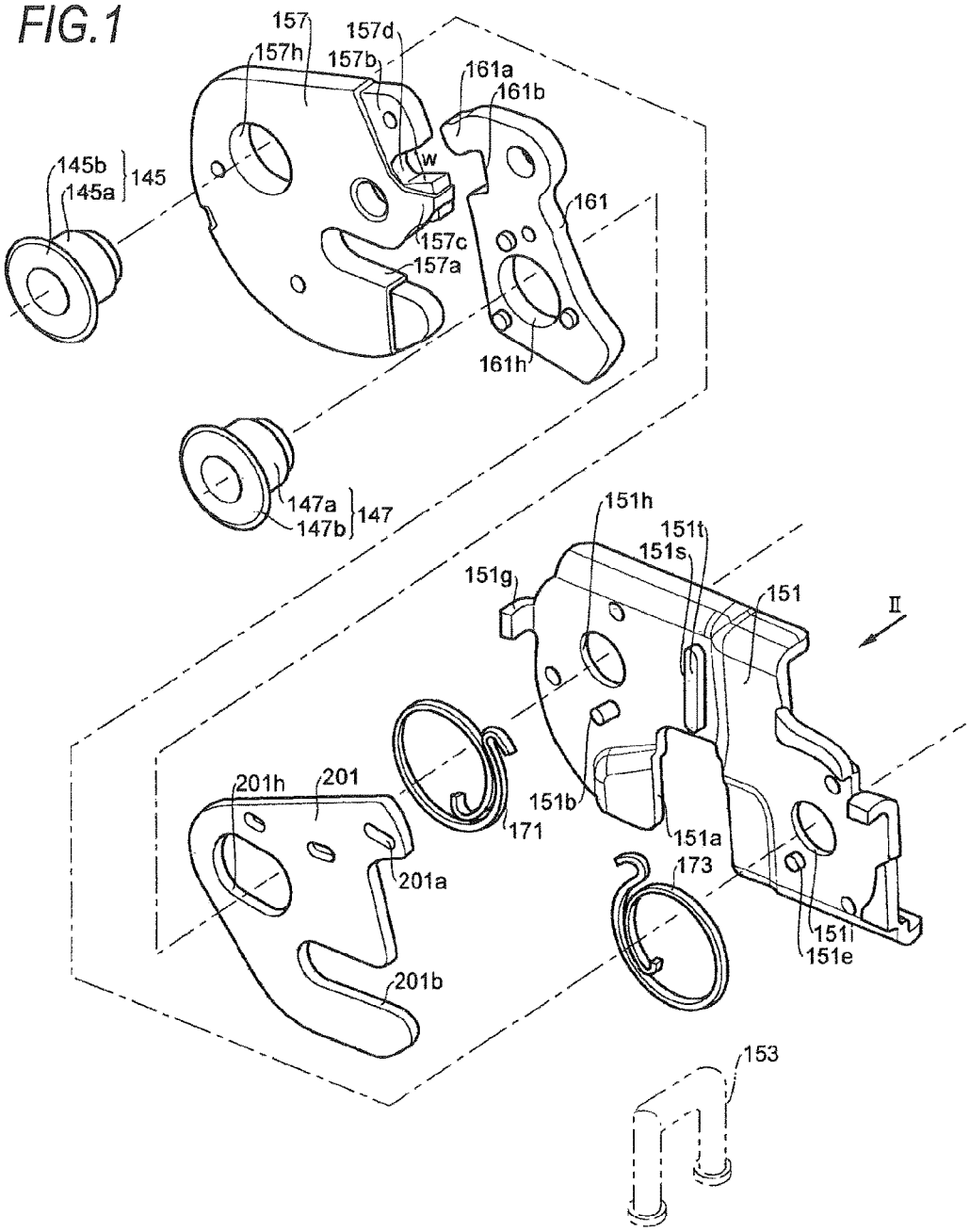
157
157d
157h
157b
161a
161b
145b
145a
145
w
161
157c
157a
161h
147a
147b
147
151h
151t
151s
151g
151
II
201h
201
151b
171
151a
173
201a
151i
151e
201b
153

FIG.2

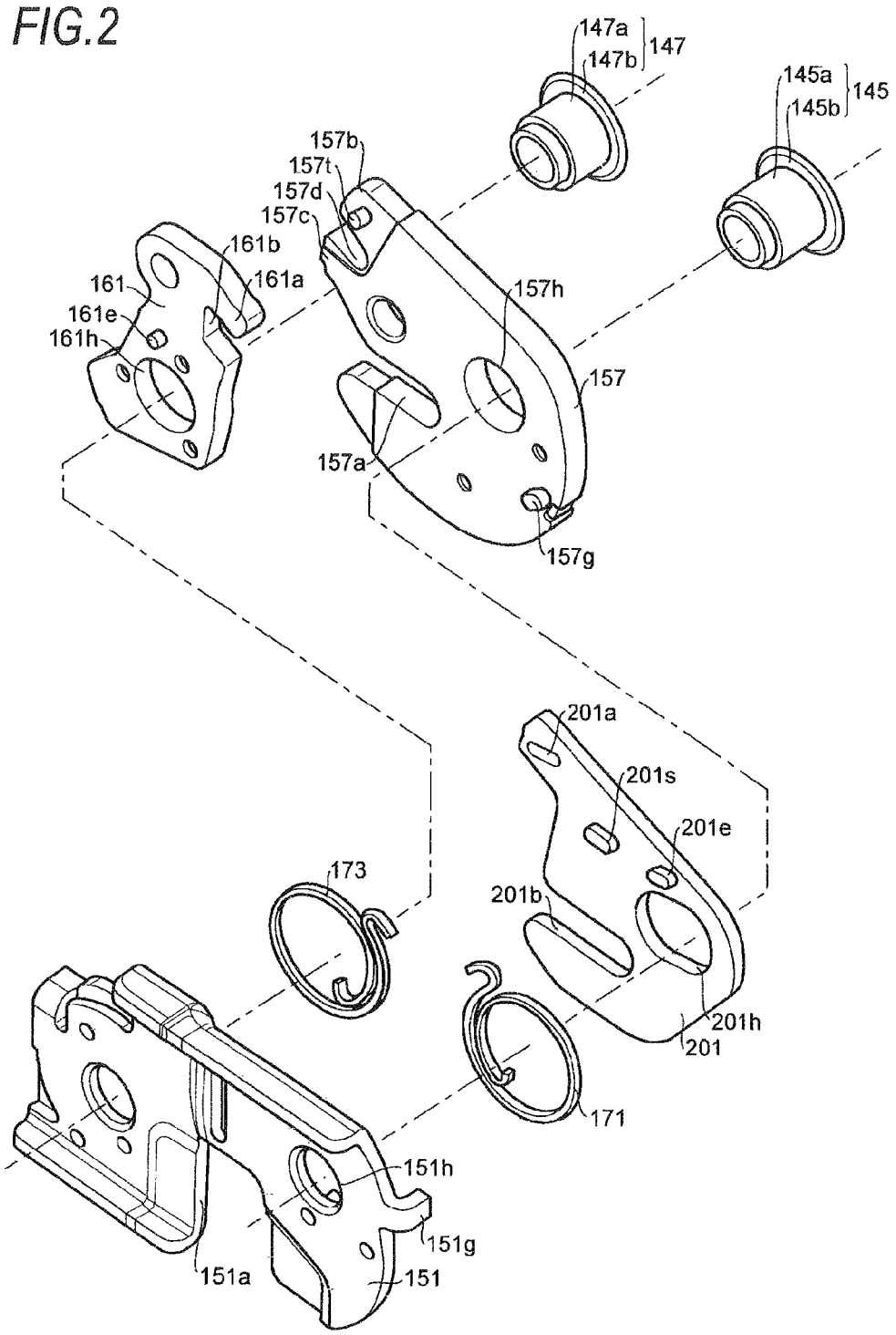
147a
147b
147
145a
145b
145
157b
157t
157d
157c
161b
161a
161
161e
161h
157h
157
157a
157g
201a
201s
201e
173
201b
201h
201
171
151h
151g
151a
151

FIG.3

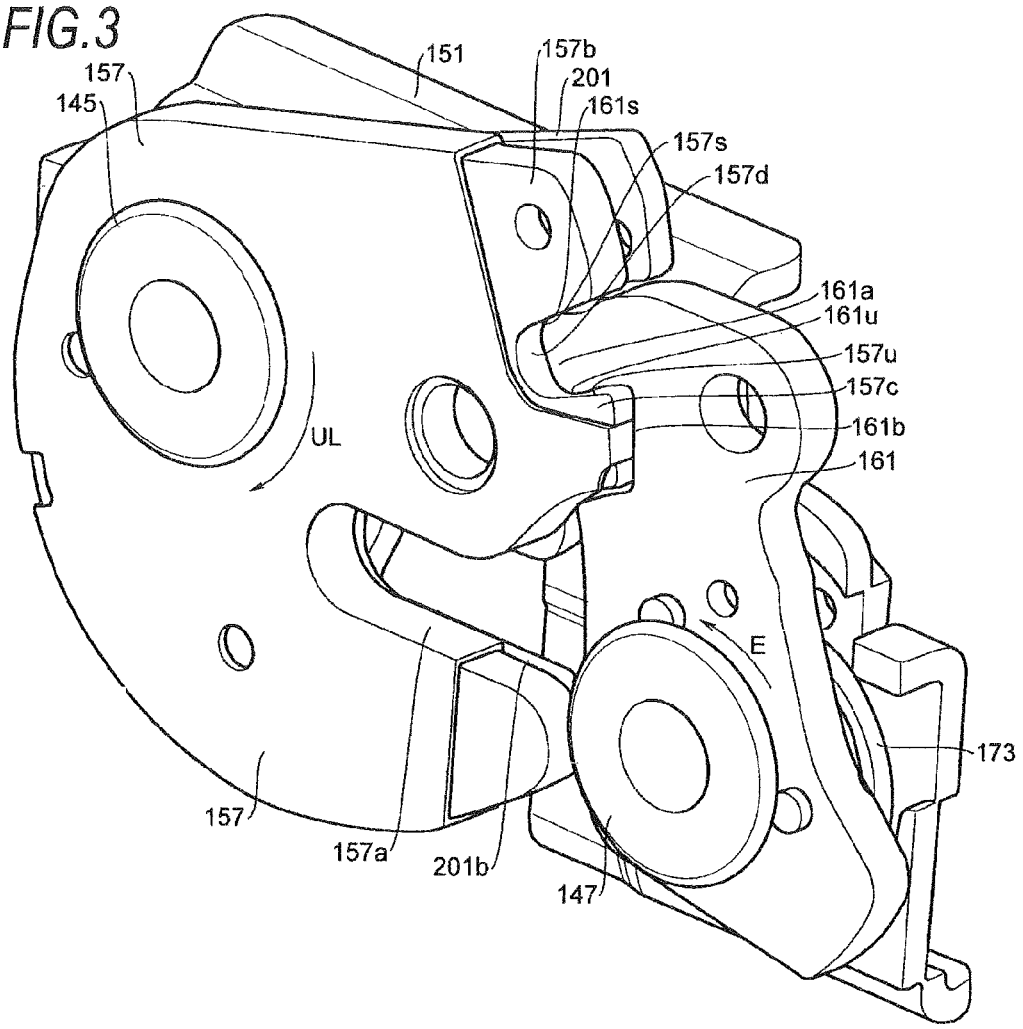
151
157b
201
161s
157
145
157s
157d
161a
161u
157u
157c
161b
161
UL
E
173
157
157a
201b
147

FIG.4

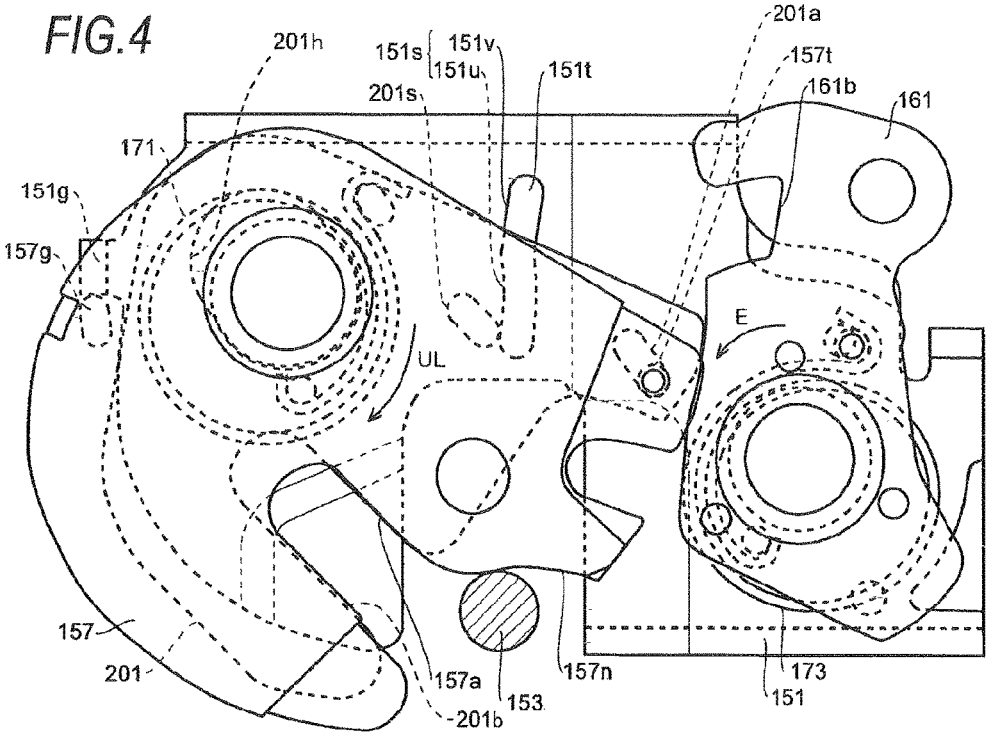
201h
151s
151v
151u
151t
201a
157t
161b
161
201s
171
151g
157g
E
UL
157
201
157a
153
157n
173
151
201b

FIG.5

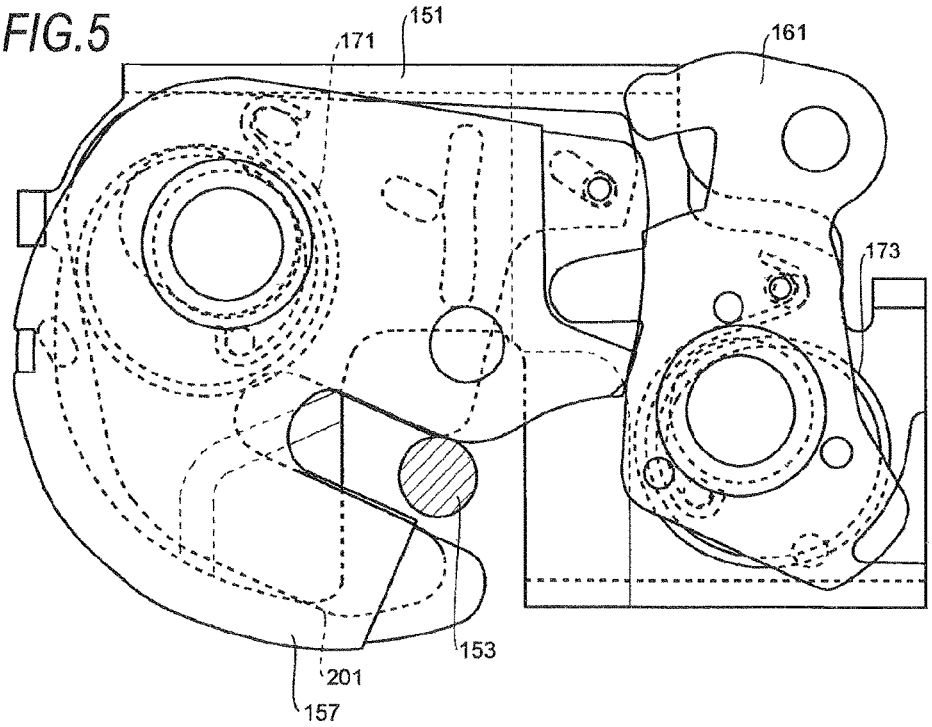
151
171
161
173
153
201
157

FIG.6

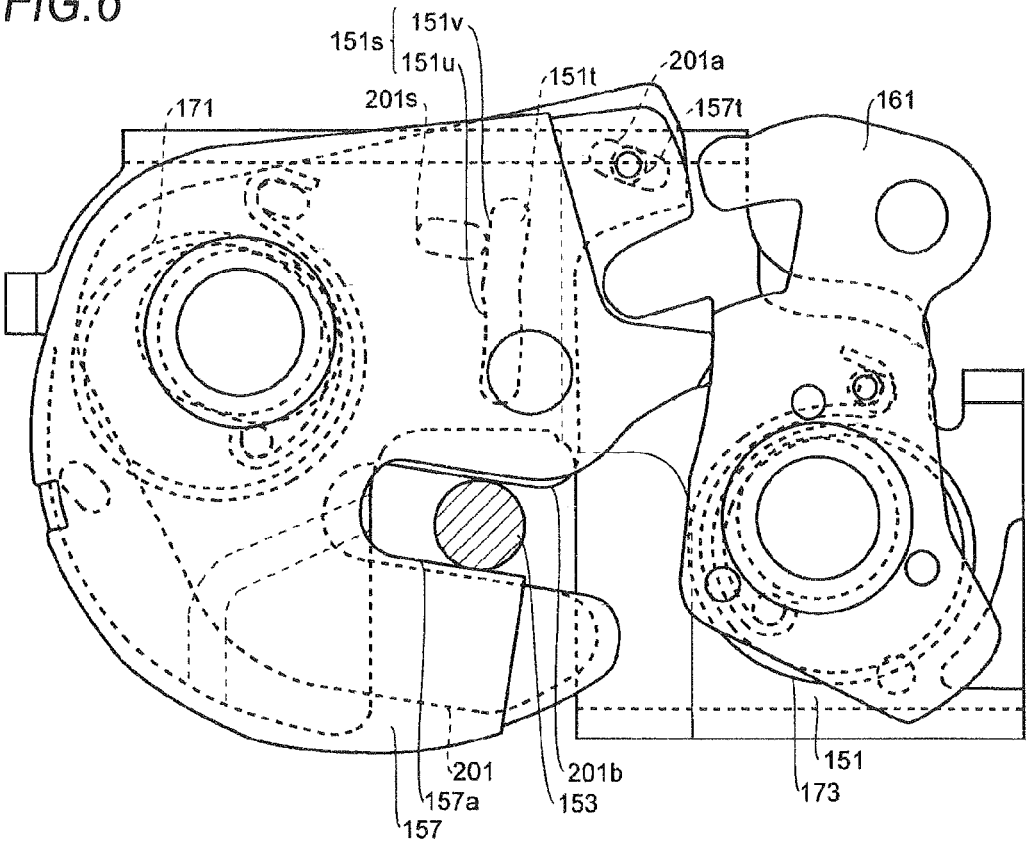
151s
151v
151u
151t
201a
171
201s
157t
161
201
157a
157
153
201b
151
173

FIG.7

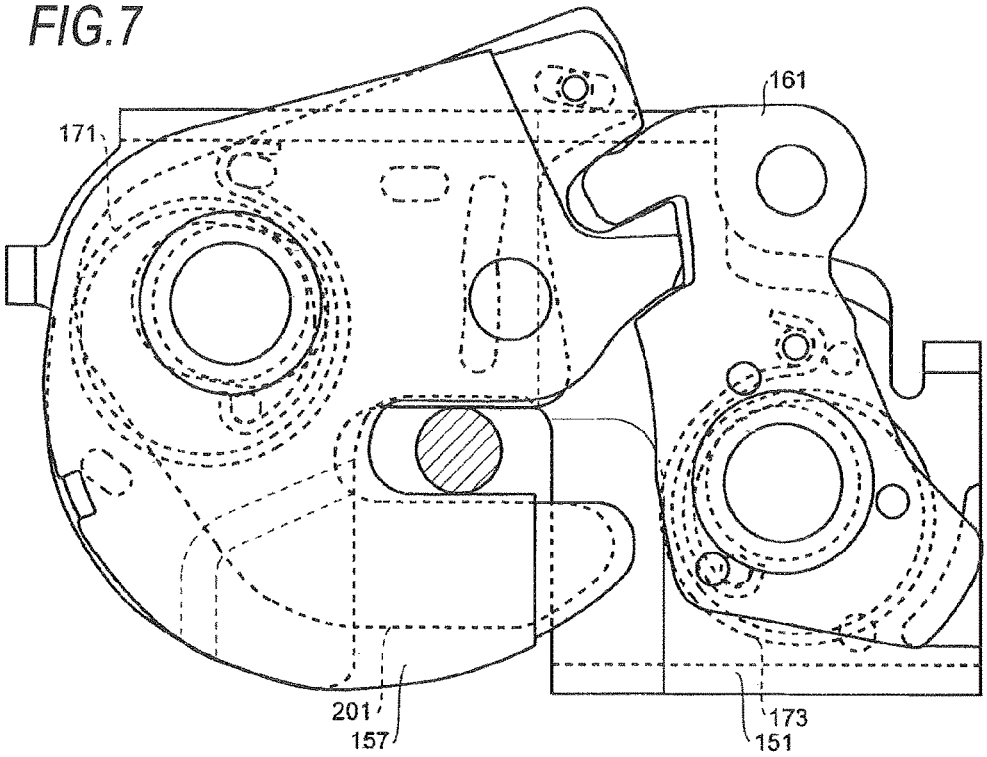

FIG.8

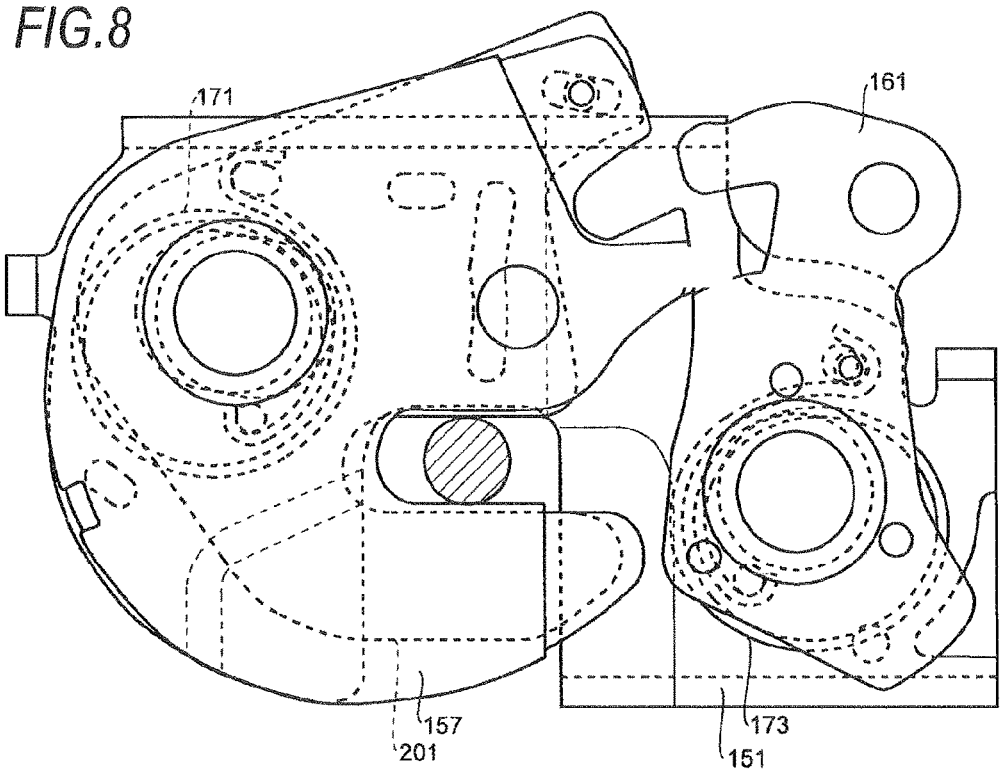

FIG.9

-BACKGROUND ART-

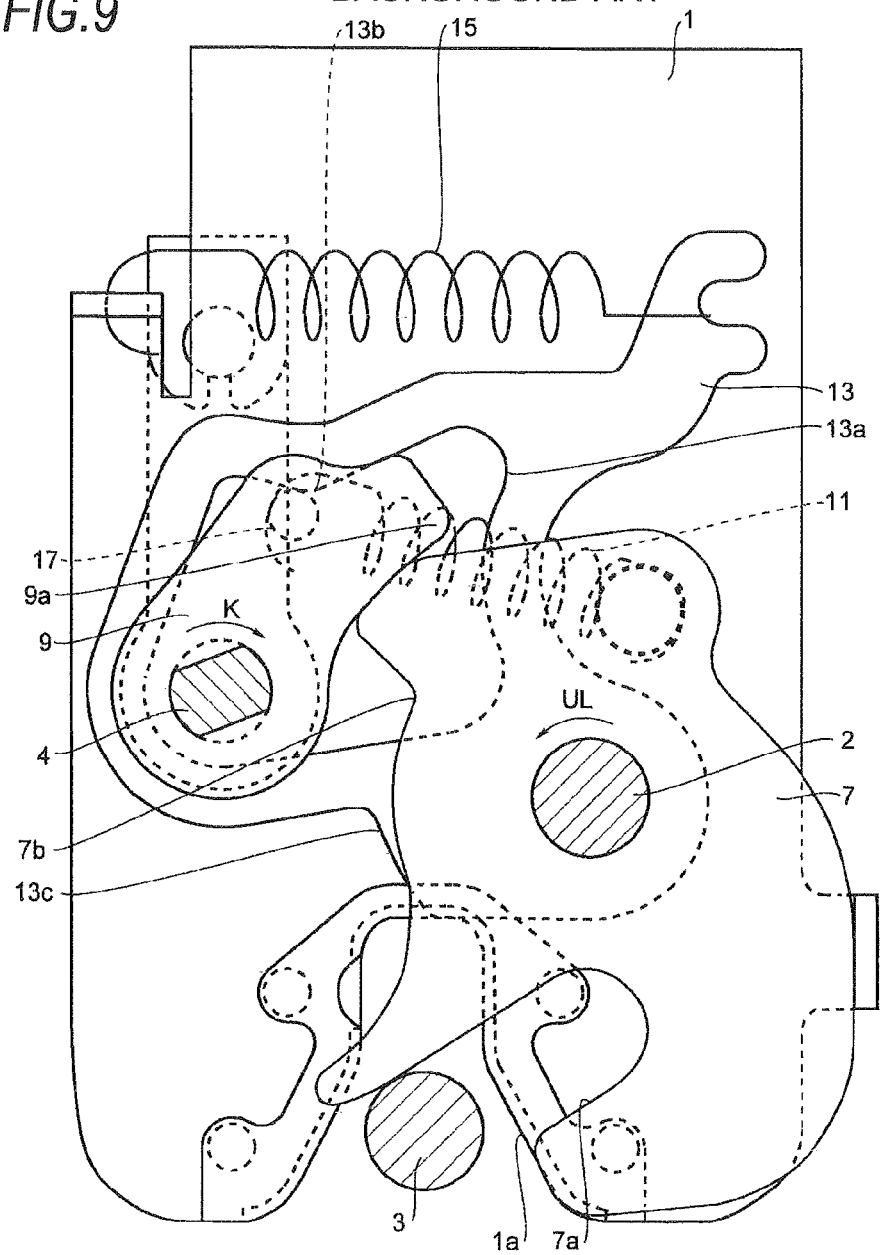

FIG.10

-BACKGROUND ART-

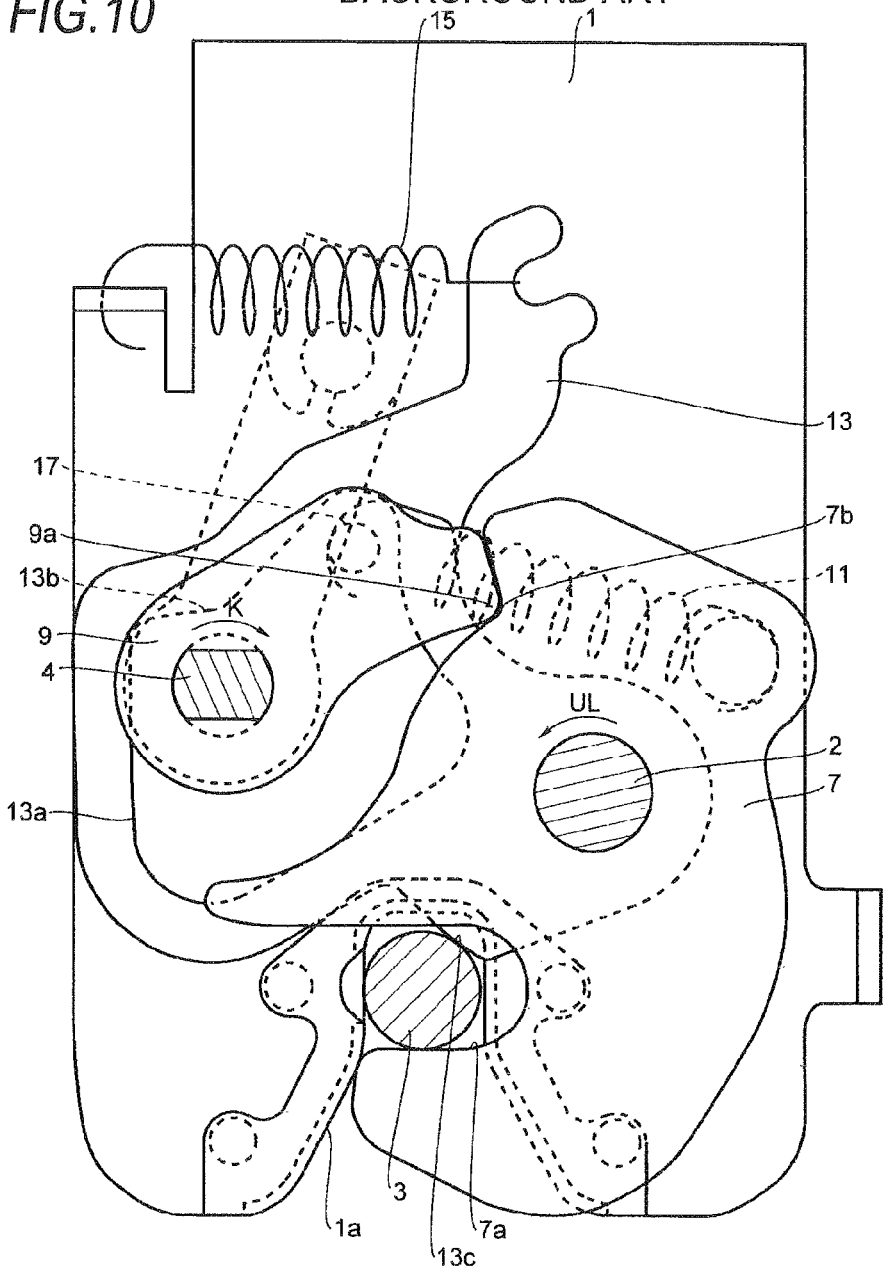

LOCKING DEVICE

TECHNICAL FIELD

The present invention relates to a locking device.

BACKGROUND ART

An example of a background locking device is described with reference to FIGS. **9** and **10**. FIG. **9** is a view for explaining an unlocked state of the background locking device. FIG. **10** is a view for explaining a locked state of the background locking device.

The locking device is attached to each of a moving-side member and a fixed-side member. In these figures, the moving-side member is, for example, a seat, a door, a trunk lid or an engine hood, which is provided to be rotatable relative to a floor of a vehicle. The fixed-side member is, for example, a vehicle body. The locking device is a device that is capable of preventing the relative movement between the moving-side member and the fixed-side member (e.g., see Patent Literature 1).

The locking device includes a base **1** and a striker **3**. The base **1** is provided in one of the moving-side member and the fixed-side member, and the striker **3** is provided in the other one.

A shaft **2** is provided on the right portion of the base **1**, and a hook **7** is rotatably provided on the shaft **2**. A shaft **4** is rotatably provided on the left portion of the base **1**, and a pawl **9** is provided on the shaft **4**. A groove **1***a* is provided between the left portion and the right portion of the base **1**.

The hook **7** is formed with a groove **7***a* into which the striker **3** is capable of entering. The hook **7** is formed with a concave portion **7***b*. The pawl **9** is formed with a convex portion **9***a* which is engageable with the concave portion **7***b* of the hook **7**.

A spring **11** is caused to exert a force on the hook **7** and the pawl **9**. One end of the spring **11** is locked to the hook **7** and the other end thereof is locked to the pawl **9**. The spring **11** urges the hook **7** in an unlocked position direction (in the drawing, a direction of an arrow UL) and urges the pawl **9** in a direction (in the drawing, a direction of an arrow K) in which the convex portion **9***a* is engaged with the concave portion **7***b* of the hook **7**.

A striker-contact member **13** is rotatably provided on the shaft **2** of the hook **7**. One end of a spring **15** is locked to the base **1**, and the other end thereof is locked to the striker-contact member **13**. The spring **15** urges the striker-contact member **13** in the same direction as the unlock direction (in the drawing, the direction of the arrow UL) of the hook **7**. The striker-contact member **13** is formed with a cam hole **13***a*.

The pawl **9** is provided with a pin **17** which is fitted into the cam hole **13***a* of the striker-contact member **13**.

As shown in FIG. **10**, a stopper portion **13***b* is formed in the cam hole **13***a* of the striker-contact member **13**, and the pin **17** of the pawl **9** is capable of abutting against the stopper portion **13***b*.

The striker-contact member **13** is formed with a contact portion **13***c*, which is abutted against the striker **3** so as to sandwich the striker **3** in cooperation with a wall surface of the groove **7***a* of the hook **7** and a wall surface of the groove **1***a* of the base **1**.

Next, an operation of the locking device configured as described above is described.

In the unlocked state shown in FIG. **9**, the stopper portion **13***b* of the cam hole **13***a* of the striker-contact member **13** is abutted against the pin **17** of the pawl **9**, and thus the striker-contact member **13** is prohibited from being further rotated in the direction of the arrow UL.

When a surface in the vicinity of an opening of the groove **7***a* of the hook **7** is pressed by the striker **3**, the hook **7** is rotated in a locked position direction against an urging force of the spring **11**. Then, the concave portion **7***b* of the hook **7** is engaged with the convex portion **9***a* of the pawl **9**, so that the hook **7** is prohibited from being rotated in the unlock direction. In this way, the striker **3** becomes the locked state shown in FIG. **10**, in which the striker **3** cannot be detached from the groove **7***a* of the hook **7**.

When the convex portion **9***a* of the pawl **9** is engaged with the concave portion **7***b* of the hook **7**, the pawl **9** is rotated in a direction of an arrow K. In this way, the abutment between the pin **17** of the pawl **9** and the stopper portion **13***b* of the cam hole **13***a* of the striker-contact member **13** is released. Further, the striker-contact member **13** is rotated in the direction of the arrow UL by an urging force of the spring **15**. Then, the contact portion **13***c* of the striker-contact member **13** sandwiches the striker **3** in cooperation with the wall surface of the groove **7***a* of the hook **7** and the wall surface of the groove **1***a* of the base **1**. In this way, the rattling between the striker **3** and the groove **7***a* of the hook **7** is eliminated.

On the contrary, in order to unlock the locked state shown in FIG. **10**, the pawl **9** is rotated in a direction opposite to the direction of the arrow K against the urging force of the spring **11** and the spring **15**. Then, the engagement between the convex portion **9***a* of the pawl **9** and the concave portion **7***b* of the hook **7** is released and the urging force of the spring **11** causes the hook **7** to be rotated to the unlocked position where the striker **3** is capable of entering the groove **7***a*. When a rotation operating force to the pawl **9** is released in this state, the convex portion **9***a* of the pawl **9** becomes the unlocked state shown in FIG. **9** by being abutted against the portion of the hook **7** other than the concave portion **7***a*.

The pin **17** is also moved by the movement of the pawl **9**, and the stopper portion **13***b* of the cam hole **13***a* of the striker-contact member **13** comes to push the pin **17**.

CITATION LIST

Patent Literature

Patent Literature 1: Japanese Patent Publication No. 4862615

DISCLOSURE OF INVENTION

Problems to be Solved by Invention

In the locking device configured as described above, when unlocking the locked state, the pawl **9** has to be rotated against the urging force of two springs of the spring **11** for urging the pawl **9** and the spring **15** for urging the striker-contact member **13**. Accordingly, a large operating force is required at the time of unlocking the locked state.

Further, the pin **17** is moved while being abutted against the cam hole **13***a* at the time of unlocking the locked state. Therefore, an operating force is varied and operability is poor.

The present invention has been made in consideration of the above problems, and an object thereof is to provide a locking device in which an operating force at the time of unlocking the locked state is reduced and which has a good operability.

Means for Solving the Problems

According to the present invention, there is provided a locking device that includes

a base; a hook, which is provided on the base and is formed with a groove into which a striker is capable of entering and which is capable of rotating from an unlocked position where the striker is capable of entering the groove to a locked position where the striker is prohibited from being detached from the groove; a pawl, which is rotatably provided on the base and configured to prohibit the rotation of the hook by being engaged with the hook located in the locked position and which is urged in a direction to be engaged with the hook; a striker-contact member, which is provided on the hook and is abutted against the striker so as to sandwich the striker being entered the groove of the hook, in cooperation with the groove of the hook; and an urging member, which urges the hook in the unlocked position direction via the striker-contact member and urges the striker-contact member in a direction to be abutted against the striker.

Effects of Invention

According to the present invention, a locking device is provided, in which an operating force at the time of unlocking the locked state is reduced and which has a good operability.

Other effects of the present invention become more apparent from the embodiment for carrying out the invention described below and accompanying drawings.

BRIEF DESCRIPTION OF DRAWINGS

FIG. **1** is an exploded perspective view of a locking device of an illustrative embodiment.

FIG. **2** is an exploded perspective view as seen from a direction of an arrow II in FIG. **1**.

FIG. **3** is a perspective view showing an assembled state of the locking device shown in FIG. **1**.

FIG. **4** is a plan view for explaining an unlocked state (fully open) of the locking device shown in FIG. **1**.

FIG. **5** is a plan view for explaining a state between an unlocked state and a locked state of the locking device shown in FIG. **1**.

FIG. **6** is a plan view for explaining a state that is further shifted to the locked state from the state of FIG. **5**.

FIG. **7** is a plan view for explaining the locked state of the locking device shown in FIG. **1**.

FIG. **8** is a plan view for explaining a state of the locking device shown in FIG. **1** immediately after the locked state is unlocked.

FIG. **9** is a view for explaining an unlocked state of a background locking device.

FIG. **10** is a view for explaining a locked state of the background locking device.

EMBODIMENT FOR CARRYING OUT INVENTION

An illustrative embodiment of the present invention will be described with reference to the drawings. FIG. **1** is an exploded perspective view of a locking device of an illustrative embodiment, FIG. **2** is an exploded perspective view as seen from a direction of an arrow II in FIG. **1**, FIG. **3** is a perspective view showing an assembled state of the locking device shown in FIG. **1**, FIG. **4** is a plan view for explaining an unlocked state (fully open) of the locking device shown in FIG. **1**, FIG. **5** is a plan view for explaining a state between an unlocked state and a locked state of the locking device shown in FIG. **1**, FIG. **6** is a plan view for explaining a state that is further shifted to the locked state from the state of FIG. **5**, FIG. **7** is a plan view for explaining the locked state of the locking device shown in FIG. **1**, and FIG. **8** is a plan view for explaining a state of the locking device shown in FIG. **1** immediately after the locked state is unlocked.

First, a configuration of a locking device of the present embodiment is described with reference to FIGS. **1** to **3**.

The locking device is attached to each of a moving-side member and a fixed-side member. The moving-side member is, for example, a seat, a door, a trunk lid or an engine hood, which is provided to be rotatable relative to a floor of a vehicle. The fixed-side member is, for example, a vehicle body. The locking device is a device that is capable of preventing the relative movement between the moving-side member and the fixed-side member.

The locking device includes a base **151** and a striker **153**. The base **151** is attached to one of the moving-side member and the fixed-side member, and the striker **153** is attached to the other of the moving-side member and the fixed-side member.

The base **151** is provided with a groove **151***a* into which the striker **153** is capable of entering. The base **151** includes a hook **157** and a pawl **161**. The hook **157** and the pawl **161** are provided on the base **151** so as to be rotatable around rotation axes parallel to each other.

As shown in FIG. **1**, the base **151** is a substantially plate-like member having a front surface and a back surface. The base **151** has a right portion and a left portion, which are provided across the groove **151***a*.

On the front surface of the left portion of the base **151**, a striker-contact member **201**, and a hook **157** are stacked in this order from the base **151** side. The striker-contact member **201** is provided with an elongated through hole **201***h* that has a track shape. The hook **157** is provided with a circular through hole **157***h*. The base **151** is also formed with a through hole **151***h*. A diameter of the hole **151***h*, a short diameter of the elongated hole **201***h* of the striker-contact member **201** and a diameter of the hole **157***h* of the hook **157** are set to be approximately the same size, respectively.

A bushing **145** is provided on the front surface of the base **151**. The bushing **145** has a cylindrical portion **145***a* and an attaching portion **145***b* formed in a base portion of the cylindrical portion **145***a*. The cylindrical portion **145***a* is inserted into the hole **157***h* of the hook **157**, the elongated hole **201***h* of the striker-contact member **201** and the hole **151***h* of the base **151**. The attaching portion **145***b* is abutted against a peripheral edge of the hole **157***h* of the hook **157**.

An outer diameter of the cylindrical portion **145***a* is set to be slightly smaller than the diameter of the hole **157***h* of the hook **157**, the short diameter of the elongated hole **201***h* of the striker-contact member **201** and the diameter of the hole **151***h* of the base **151**. The cylindrical portion **145***a* is inserted through the hole **151***h* of the base **151** and projected to the back surface of the base **151**. A leading end of the cylindrical portion **145***a* is crimped at the back surface of the base **151**. The hook **157** and the striker-contact member **201** are rotatable relative to the base **151**.

Further, in the present embodiment, the position of the hook **157** shown in FIG. **4** is defined as an unlocked position and the position of the hook **157** shown in FIG. **7** is defined as a locked position.

As shown in FIG. **1**, the pawl **161** is arranged on the front surface of the right portion of the base **151**. The pawl **161** is formed with a through hole **161***h*. Furthermore, the base **151** is also formed with a through hole **151***i*. A diameter of the hole **151***i* is set to be substantially equal to that of the hole **161***h* of the pawl **161**.

A bushing **147** is provided on the front surface of the base **151**. The bushing **147** has a cylindrical portion **147***a* and an attaching portion **147***b* formed in a base portion of the cylindrical portion **147***a*. The cylindrical portion **147***a* is inserted into the hole **161***h* of the pawl **161** and the hole **151***i* of the base **151**. The attaching portion **147***b* is abutted against a peripheral edge of the hole **161***h* of the pawl **161**.

An outer diameter of the cylindrical portion **147***a* is set to be slightly smaller than the diameter of the hole **161***h* of the pawl **161** and the diameter of the hole **151***i* of the base **151**. The cylindrical portion **147***a* is inserted through the hole **151***i* of the base **151** and projected to the back surface of the base **151**. A leading end of the cylindrical portion **147***a* is crimped at the back surface of the base **151**. The pawl **161** is rotatable relative to the base **151**.

The hook **157** is formed with a groove **157***a* into which the striker **153** is capable of entering and which has planar opposite wall surfaces. Further, on a peripheral portion of the hook **157**, a first convex portion **157***b* and a second convex portion **157***c* are formed along a rotation direction of the hook **157** into the unlocked position. A concave portion **157***d* is formed between the first convex portion **157***b* and the second convex portion **157***c*. The concave portion **157***d* is formed such that a width (w: see FIG. **1**) is gradually thinned toward the inside from a peripheral surface.

A convex portion **161***a* is formed on a surface of the pawl **161** facing the hook **157**. The convex portion **161***a* is able to be locked/unlocked from the concave portion **157***d* of the hook **157**. Further, a concave portion **161***b* is formed on a surface of the pawl **161** facing the hook **157**. The second convex portion **157***c* of the hook **157** is capable of entering the concave portion **161***b*.

Now, the shapes of the concave portion **157***d* of the hook **157** and the convex portion **161***a* of the pawl **161** are described.

As shown in FIG. **3**, a first stopper surface **157***s* and a second stopper surface **157***u* are formed on the concave portion **157***d* of the hook **157**. The first stopper surface **157***s* is parallel to a rotation axis of the hook **157** and intersects with a rotation direction (a direction of an arrow UL and a direction opposite to the direction of the arrow UL in FIG. **3**) of the hook **157**. The second stopper surface **157***u* faces the first stopper surface **157***s* via a space. The first stopper surface **157***s* and the second stopper surface **157***u* are planar surfaces.

As shown in FIG. **3**, a first contact portion **161***s* and a second contact portion **161***u* are formed on the convex portion **161***a* of the pawl **161**. The first contact portion **161***s* is capable of abutting against the first stopper surface **157***s* of the concave portion **157***d*. The second contact portion **161***u* is capable of abutting against the second stopper surface **157***u*.

As shown in FIG. **2**, a protrusion **157***t* is formed on a surface of the first convex portion **157***b* of the hook **157** facing the striker-contact member **201**. Further, an elongated hole **201***a* having a track shape is formed on the striker-contact member **201** and engaged with the protrusion **157***t* of the hook **157**.

A major-axis direction of the elongated hole **201***a* is set to be the same as a major-axis direction of the elongated hole **201***h* described above. Therefore, the striker-contact member **201** and the hook **157** are integrated and are capable of rotating about the bushing **145** as a rotation center. The striker-contact member **201** are movable linearly with respect to the hook **157** only along the major-axis direction of the elongated hole **201***h* and the elongated hole **201***a*.

Here, a guide mechanism for linearly guiding the striker-contact member **201** is configured by the bushing **145** that is a rotation axis of the hook **157**, the elongated hole **201***h* of the striker-contact member **201**, into which the bushing **145** is fitted, the protrusion **157***t* of the hook **157**, and the elongated hole **201***a* of the striker-contact member **201**, into which the protrusion **157***t* of the hook is fitted.

As shown in FIG. **4**, the striker-contact member **201** is formed with a groove **201***b* into which the striker **153** is capable of entering and which has two planar wall surfaces opposing to each other. The hook **157** and the striker-contact member **201** are overlapped in such a way that the groove **157***a* of the hook **157** and the groove **201***b* of the striker-contact member **201** are overlapped, as seen from the rotation axis direction of the hook **157**. The major-axis direction of the elongated hole **201***h* and the elongated hole **201***a* is set to be equal to the extension direction of the groove **157***a* of the hook **157** and the groove **201***b* of the striker-contact member **201**.

In the state where the hook **157** and the striker-contact member **201** are overlapped, a distance from the center of the elongated hole **201***h* to the center in the longitudinal direction of the groove **157***a* of the hook **157** is shorter than a distance from the center of the elongated hole **201***h* to the center of the elongated hole **201***a*. Thereby, the striker **153** is abutted against the groove **157***a* positioned between two support points of the elongated hole **201***h* and the elongated hole **201***a* when the striker **153** is abutted against the groove **157***a*. In this way, the striker **153** is securely supported.

As shown in FIGS. **1** and **2**, a spring (spiral spring: hook urging member) **171** is provided between the base **151** and the striker-contact member **201**. An inner end of the spring **171** is locked to a first protrusion **151***b* of the base **151**, and an outer end thereof is locked to a protrusion **201***e* of the striker-contact member **201**. Further, the spring **171** urges the hook **157** in the unlocked position direction (direction of the arrow UL in FIG. **4**) via the striker-contact member **201**.

Further, a spring (spiral spring: pawl urging member) **173** is provided between the base **151** and the pawl **161**. An inner end of the spring **173** is locked to a fourth protrusion **151***e* of the base **151** and an outer end thereof is locked to a protrusion **161***e* of the pawl **161**. Further, the spring **173** urges the pawl **161** in a direction in which the pawl is engaged with the hook **157** (direction of an arrow E in FIG. **4**).

As shown in FIGS. **1** and **2**, a protrusion **151***t* is formed on the front surface of the base **151**. The protrusion **151***t* extends in a direction intersecting with the major-axis direction of the elongated holes **201***h*, **201***a* of the striker-contact member **201** immediately before being shifted to the locked state from the unlocked state.

The striker-contact member **201** is formed with a stopper protrusion **201***s* capable of abutting against a stopper surface (upright wall surface) **151***s* of the protrusion **151***t*. As shown in FIG. **4**, the stopper surface **151***s* of the protrusion **151***t* provided in the base **151** has an arcuate surface portion **151***u* and a planar surface portion **151***v* provided continuously to the arcuate surface portion **151***u*.

The arcuate surface portion **151***u* of the present embodiment is an arcuate surface centered on the rotation center axis of the hook **157**. As can be seen from the positional relationship between the elongated hole **201***a* of the striker-

contact member **201** and the protrusion **157***t* of the hook **157** in FIG. **4**, the arcuate surface portion **151***u* holds the striker-contact member **201** at a position most distant from the pawl **161** when the stopper protrusion **201***s* of the striker-contact member **201** is abutted against the arcuate surface portion **151***u*. The arcuate surface portion **151***u* functions when the hook **157** is located between an unlocked position state and an intermediate state between an unlocked position and a locked position.

In the present embodiment, as can be seen from the positional relationship between the elongated hole **201***a* of the striker-contact member **201** and the protrusion **157***t* of the hook **157** in FIG. **6**, the planar surface portion **151***v* holds the striker-contact member **201** at a position displaced to the direction of the pawl **161** from the state of the arcuate surface portion **151***u* when the stopper protrusion **201***s* of the striker-contact member **201** is abutted against the planar surface portion **151***v*. The planar surface portion **151***v* functions when the hook **157** is located between the intermediate state between the unlocked position and the locked position, and a state immediately before the locked position.

A stopper mechanism is configured by the stopper surface **151***s* of the protrusion **151***t* of the base **151** and the stopper protrusion **201***s* of the striker-contact member **201**. The stopper mechanism restricts the movement of the striker-contact member **201** in a direction to be abutted against the striker **153** when the hook **157** is located between the unlocked position and a position other than the locked position.

In addition, the planar surface portion **151***v* may restrict the movement of the striker-contact member **201** in a direction to be abutted against the striker **153** until immediately before the hook **157** rotating in the locked position direction reaches the locked position. Alternatively, the planar surface portion **151***v* may release the movement restriction of the striker-contact member **201** in the direction to be abutted against the striker **153** immediately after the hook **157** rotating in the locked position direction goes beyond the intermediate state between the unlocked position and the locked position.

Next, an operation of the configuration described above is described.

(Operation from Unlocked State to Locked State)

When the hook **157** is in the unlocked state shown in FIG. **4**, the protrusion **157***g* (see FIG. **2**) of the hook **157** that is urged in the unlock direction by the urging force of the spring **171** is abutted against the bent protrusion **151***g* (see FIGS. **1** and **2**) of the base **151**, and further rotational movement of the hook **157** in the unlock direction is prevented. In this state, the stopper protrusion **201***s* of the striker-contact member **201** is abutted against the stopper surface **151***s* of the protrusion **151***t* of the base **151**. More specifically, the stopper protrusion **201***s* is abutted against the arcuate surface portion **151***u* of the stopper surface **151***s*, and the striker-contact member **201** is positioned at a position most distant from the pawl **161**. Meanwhile, the portion of the pawl **161**, which is close to the rotation center than the concave portion **161***b*, is abutted against the first protrusion **157***b* of the hook **157** by the urging force of the spring **173**.

When a surface **157***n* in the vicinity of an opening of the groove **157***a* of the hook **157** is pressed by the striker **153**, the hook **157** is rotated in the locked position direction against the urging force of the spring **171**, as shown in FIG. **5**.

Furthermore, when the hook **157** is rotated in the locked position direction, as shown in FIG. **6**, the stopper protrusion **201***s* of the striker-contact member **201** moves to the planar surface portion **151***v* from the arcuate surface portion **151***u* of the stopper surface **151***s* of the protrusion **151***t*. Accordingly, the striker-contact member **201** is linearly moved to the direction of the pawl **161** until the planar wall surface of the groove **201***b* is abutted against the striker **153**.

When the hook **157** is rotated to the locked position, as shown in FIG. **7**, the concave portion **157***d* of the hook **157** is engaged with the convex portion **161***a* of the pawl **161** and the hook **157** is prevented from rotating in the unlock direction. In this way, the striker **153** is locked in the state where the striker cannot be detached from the groove **157***a* of the hook **157**.

At this time, the stopper protrusion **201***s* of the striker-contact member **201** is detached from the stopper surface **151***s* of the protrusion **151***t* immediately before the hook **157** reaches the locked position. Then, a wall surface of the groove **201***b* of the striker-contact member **201** urged by the spring **171** is abutted against the striker **153** and sandwiches the striker **153** in cooperation with the wall surface of the groove **157***a* of the hook **157**. In this way, the rattling between the striker **153** and the groove **157***a* of the hook **157** is eliminated.

(Operation from Locked State to Unlocked State)

In order to unlock the pawl in the locked state shown in FIG. **7**, the pawl **161** is rotated in a direction opposite to the direction of the arrow E against the urging force of the spring **173**. Then, the pawl **161** is detached from the hook **157**, the engagement between the concave portion **157***d* of the hook **157** and the convex portion **161***a* of the pawl **161** is released, and the hook **157** is rotated in the unlocked position direction by the urging force of the spring **171**. Via the state shown in FIGS. **6** and **5**, the striker **153** as shown in FIG. **4** becomes the unlocked state where the striker is able to be detached from the groove **157***a* of the hook **157**.

According to the above configuration, the following effects can be achieved.

(1) The spring **171** urges the hook **157** in the unlocked position direction via the striker-contact member **201**.

Therefore, it is sufficient that an unlocking operating force resists an urging force of the spring **173** that urges the pawl **161**. As a result, an operating force at the time of unlocking the locked state is reduced.

(2) The spring **171** urges the hook **157** in the unlocked position direction via the striker-contact member **201**.

Therefore, a spring for urging the striker-contact member **201** is not necessary, and thus it is possible to reduce the number of parts.

(3) Since the striker-contact member **201** is linearly moved and the planar wall surface of the groove **201***b* is abutted against the striker **153**, the striker-contact member **201** does not bite into the striker **153**. Therefore, it is sufficient that an unlocking operating force resists an urging force of the spring **173** that urges the pawl **161**. As a result, an operating force at the time of unlocking the locked state is reduced.

It is noted that the present invention is not limited to the above embodiments. The following modifications may be realized.

(1) In the above embodiment, the protrusion **151***t* having the stopper surface **151***s* is provided in the base **151**, and the stopper protrusion **201***s* capable of abutting against the stopper surface **151***s* is provided in the striker-contact member **201**. However, on the contrary, a protrusion having a stopper surface may be provided in the striker-contact member **201** and a stopper protrusion capable of abutting against the stopper surface may be provided in the base **151**.

(2) In the above embodiment, the concave portion **157***d* is formed in the hook **157** and the convex portion **161***a* is formed in the pawl **161**. However, on the contrary, a convex portion may be formed in the hook **157** and a concave portion may be formed in the pawl **161**.

(3) The stopper surface **151***s* may be provided on the side of the pawl **161**, instead of the base **151**.

(4) The striker-contact member **201** of the above embodiment has a shape where the elongated hole **201***h* through which the bushing **145** is inserted is provided and where the busing **145** is inserted through. However, the striker-contact member **201** may have a shape which does not interfere with the bushing **145**.

(5) In the above embodiment, two springs of the spring **171** for urging the striker-contact member **201** and the spring **173** for urging the pawl **161** are used. However, one spring may be used whose one end is locked to the striker-contact member **201** and the other end is locked to the pawl **161**.

A rubber stopper for damping the collision of the striker **153** may be provided in the bottom of the groove **151***a* of the base **151**. For example, the rubber stopper may be attached to the groove **151***a*. Alternatively, a sheet-like rubber stopper may be attached to the front surface or back surface of the base **151** such that a portion thereof is projected from the groove **151***a*.

The present application is based upon Japanese Patent Application (Patent Application No. 2013-045004) filed on Mar. 7, 2013, the contents of which are incorporated herein by reference.

INDUSTRIAL APPLICABILITY

According to the present invention, there is provided a locking device in which an operating force at the time of unlocking the locked state is reduced and which has a good operability.

REFERENCE NUMERALS LIST

151 Base
153 Striker
157 Hook
157*a* Groove
161 Pawl
171, **173** Spring
201 Striker-Contact Member

What is claimed is:

1. A locking device comprising:

a base;

a hook, which is provided on the base, is formed with a groove into which a striker is capable of entering, and is capable of rotating from an unlocked position, in which the striker is capable of entering the groove, to a locked position, in which the striker is prohibited from being removed from the groove;

a pawl, which is rotatably provided on the base, is configured to prohibit a rotation of the hook out of the locked position by being engaged with the hook when the hook is in the locked position, and is urged in a direction to be engaged with the hook;

a striker-contact member, which is provided on the hook, wherein, when the striker has entered the groove of the hook, the striker-contact member is abutted against one side of the striker and the groove of the hook is abutted against another side of the striker;

an urging member, which urges the hook towards the unlocked position via the striker-contact member and urges the striker-contact member in a liner direction to be abutted against the one side of the striker when the striker has entered the groove; and

a pawl urging member, one end of which is attached to the pawl and another end of which is attached to the base, wherein the pawl urging member urges the pawl in the direction to be engaged with the hook,

wherein one end of the urging member is attached to the striker-contact member, and another end of the urging member is attached to the base,

wherein the striker-contact member is rotatable and is linearly movable in the linear direction with respect to the hook, and

wherein the linear direction, in which the striker-contact member is movable, is a direction intersecting an entering direction, in which the striker moves as it enters into a groove of the base and enters into the groove of the hook.

2. The locking device according to claim **1**, further comprising

a stopper mechanism, which restricts a movement of the striker-contact member in the direction to be abutted against the one side of the striker when the hook is located between the unlocked position and a position other than the locked position.

3. The locking device according to claim **2**, wherein the stopper mechanism is configured by:

a first stopper protrusion provided on the base; and

a second stopper protrusion provided on the striker-contact member.

4. The locking device according to claim **2**, wherein the stopper mechanism includes:

a stopper protrusion provided on one of the base and the striker-contact member; and

a stopper surface provided on the other of the base and the striker-contact member,

wherein the stopper protrusion abuts against the stopper surface when the hook is located between the unlocked position and the position other than the locked position.

5. The locking device according to claim **4**, wherein the stopper surface includes an arcuate surface portion and a planar surface portion provided continuously to the arcuate surface portion.

6. The locking device according to claim **5**, wherein the arcuate surface portion is centered on a rotation center axis of the hook, and

wherein the planar surface portion holds the striker-contact member at a position when the hook is in the unlocked position.

7. The locking device according to claim **1**, wherein the hook is provided with a concave portion that includes a first stopper surface parallel to a rotation axis of the hook and intersecting with a rotation direction of the hook, and a second stopper surface facing the first stopper surface via a space,

wherein the pawl is provided with a convex portion that includes a first contact portion capable of abutting against the first stopper surface and a second contact portion capable of abutting against the second stopper surface, and

wherein an engagement between the hook and the pawl is made by the concave portion and the convex portion.

8. The locking device according to claim **1**, wherein the striker-contact member is positioned between the base and the hook.

9. The locking device according to claim **1**, wherein the urging member is positioned between the striker-contact member and the base.

10. The locking device according to claim **1**, wherein, when the hook and the pawl are engaged with each other when the hook is in the locked position, rotations in a clockwise direction and a counterclockwise direction of the hook are prohibited.

11. The locking device according to claim **1**, wherein a protrusion is formed on the hook,

wherein a guide mechanism guides the striker-contact member to move along the linear direction and the guide mechanism comprises the protrusion of the hook, a first guide portion, which corresponds to the protrusion, of the striker-contact member, and an axis member, which is provided on the base as a rotation axis of the book.

12. The locking device according to claim **11**, wherein the guide mechanism further comprises a second guide portion, which is provided on the striker-contact member and corresponds to the axis member.

* * * * *