US006965517B2

(12) **United States Patent**
Wanes et al.

(10) **Patent No.: US 6,965,517 B2**
(45) **Date of Patent: Nov. 15, 2005**

(54) **COMPONENT SUBSTRATE FOR A PRINTED CIRCUIT BOARD AND METHOD OF ASSEMBYLING THE SUBSTRATE AND THE CIRCUIT BOARD**

(75) Inventors: **John O Wanes**, Richmond Hill (CA); **David L Gauthier**, Orton (CA); **Albert J Kerklaan**, Milton (CA); **Kai K Ho**, Scarborough (CA)

(73) Assignee: **C&D/Charter Holdings, Inc.**, Wilmington, DE (US)

(*) Notice: Subject to any disclaimer, the term of this patent is extended or adjusted under 35 U.S.C. 154(b) by 242 days.

(21) Appl. No.: **10/278,778**

(22) Filed: **Oct. 24, 2002**

(65) **Prior Publication Data**

US 2004/0012926 A1 Jan. 22, 2004

(30) **Foreign Application Priority Data**

Jul. 22, 2002 (CA) 2394403

(51) **Int. Cl.**[7] **H05K 7/02**; H05K 7/06; H05K 7/08; H05K 7/10; H05K 5/02

(52) **U.S. Cl.** **361/760**; 361/813; 361/803

(58) **Field of Search** 361/813, 760, 361/782, 784, 803, 804, 720, 721, 723; 257/691

(56) **References Cited**

U.S. PATENT DOCUMENTS

5,661,343 A * 8/1997 Takahashi et al. 257/723
6,232,654 B1 * 5/2001 Nagase 257/678

* cited by examiner

Primary Examiner—Phuong T. Vu
(74) *Attorney, Agent, or Firm*—Hoffmann & Baron, LLP

(57) **ABSTRACT**

The invention provides a system and method for assembling an electrical module. The module comprises a circuit board, a substrate and an electrical component carried on the substrate. The substrate is formed by a stamping process an is mounted at a location on the circuit board. The substrate forms part of an electrical circuit with a circuit in the circuit board and dissipates heat from the circuit board. The substrate and the circuit board are both initially carried in respective frames. Alignment registered in the frames allow the frames to be aligned such that the substrate is positioned at the location on the circuit board.

13 Claims, 14 Drawing Sheets

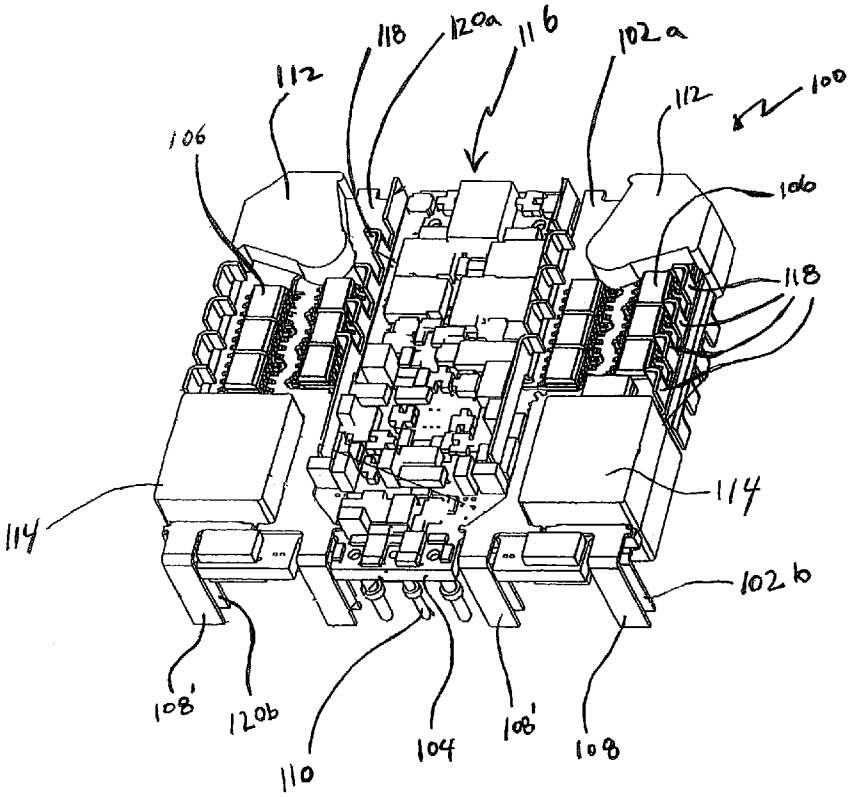

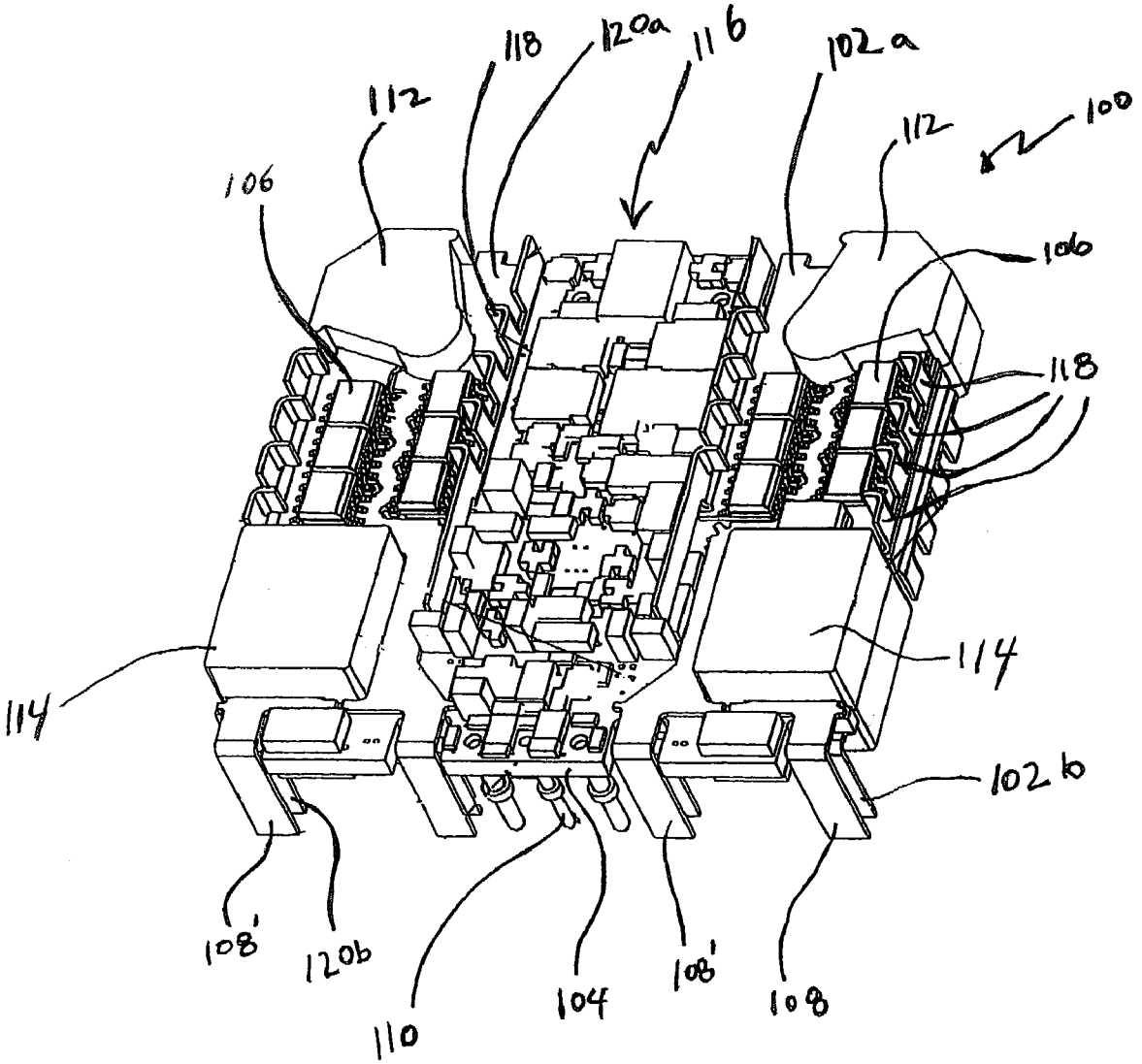
118
120a
116
102a
112
100
112
106
106
118
114
114
102b
108'
120b
110
104
108'
108

FIGURE 1A

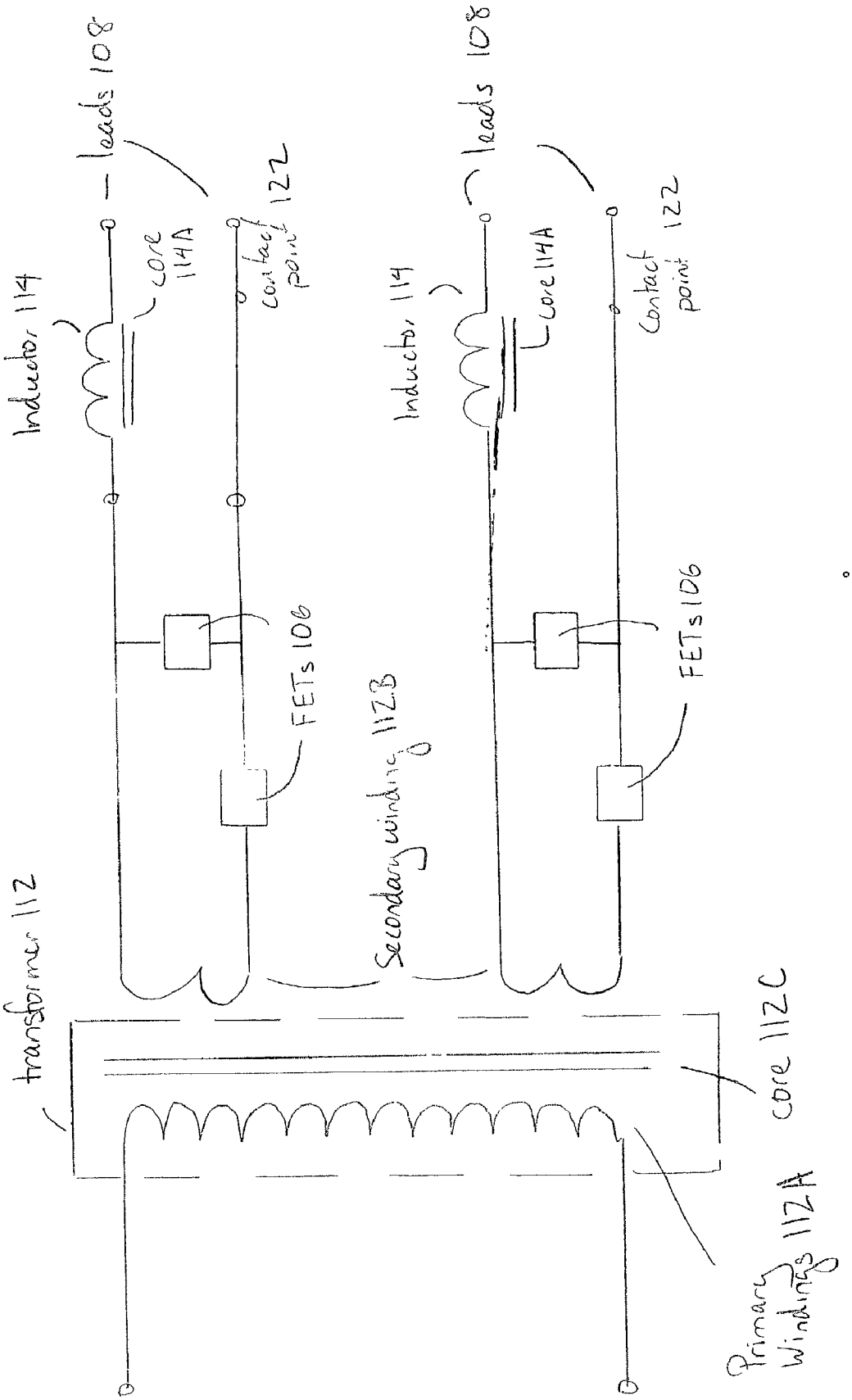
leads 108
leads 108
Inductor 114
Inductor 114
core 114A
core 114A
contact point 122
contact point 122
FETs 106
FETs 106
Secondary winding 112B
transformer 112
core 112C
Primary Windings 112A

FIGURE 1B

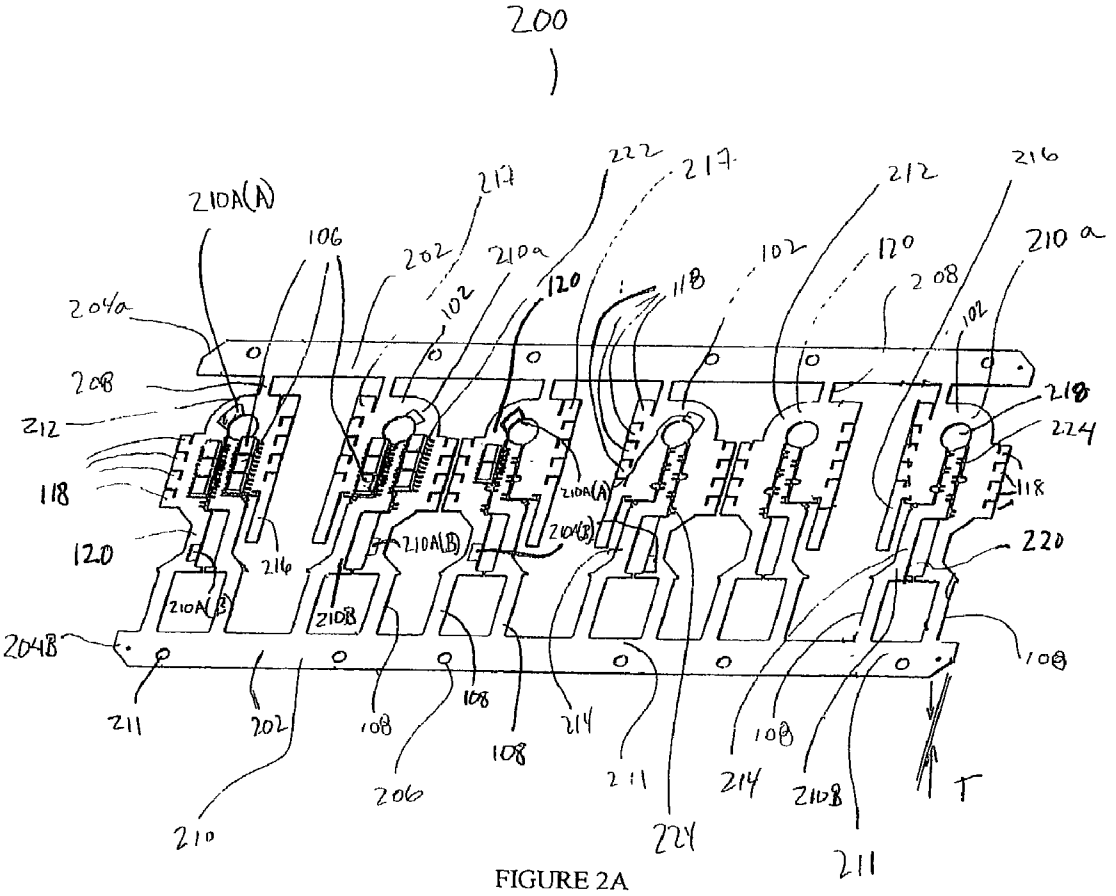
200
210A(A)
106
202
217
210a
222
217
212
216
210 a
204a
102
120
118
102
120
208
102
208
212
218
224
118
118
210A(A)
210A(B)
210A(B)
120
216
220
210A(B)
210B
204B
108
211
202
108
108
108
214
211
214
108
210B
T
206
210
224
211

FIGURE 2A

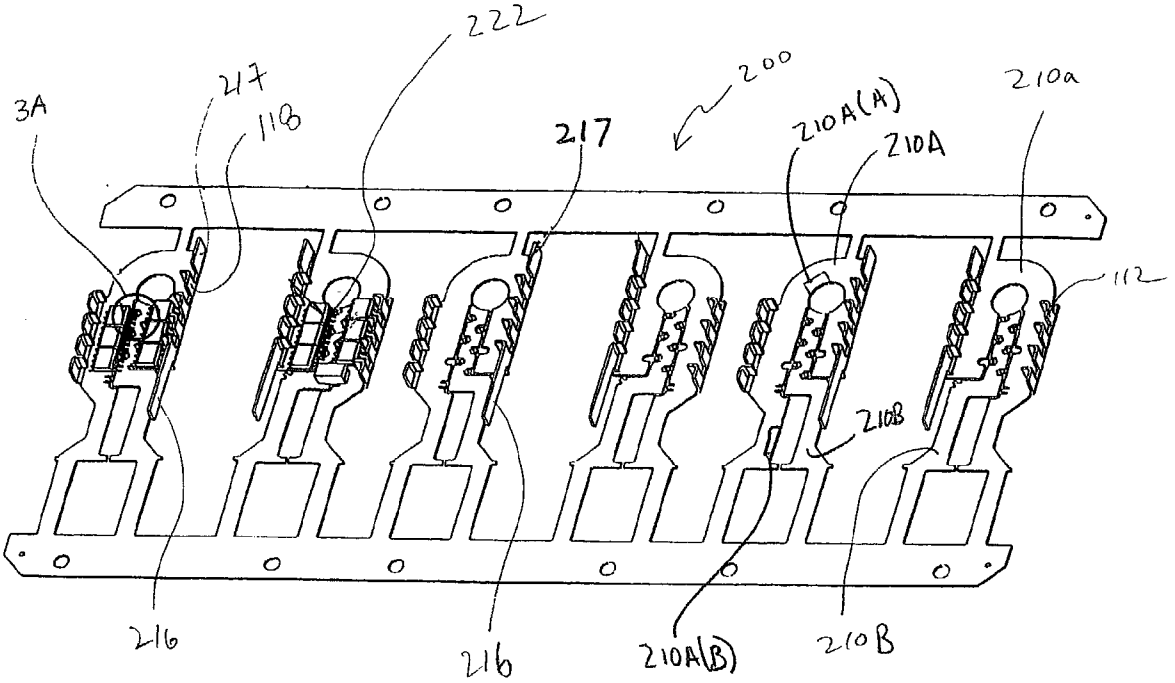

FIGURE 2B

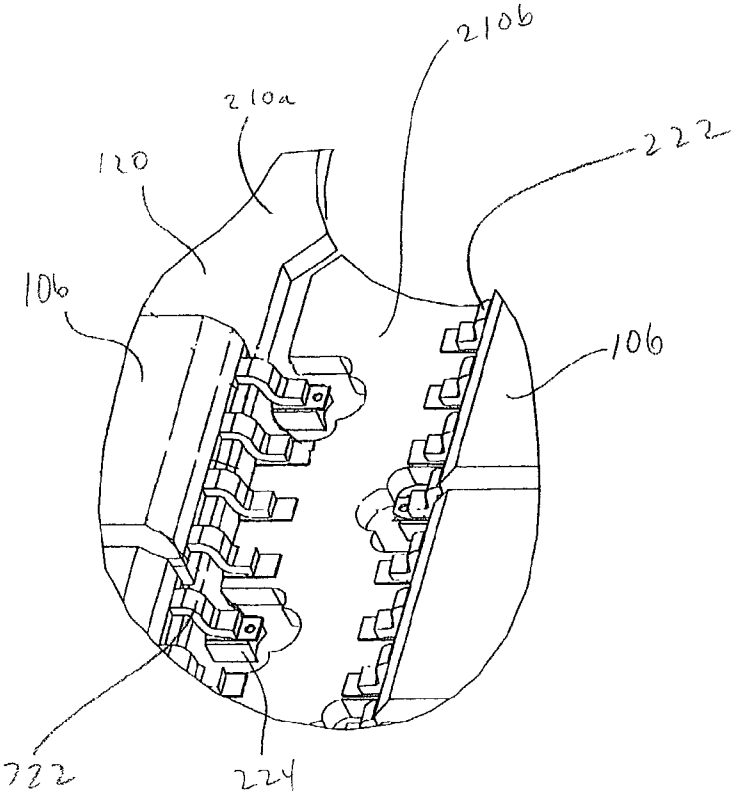

FIGURE 3B

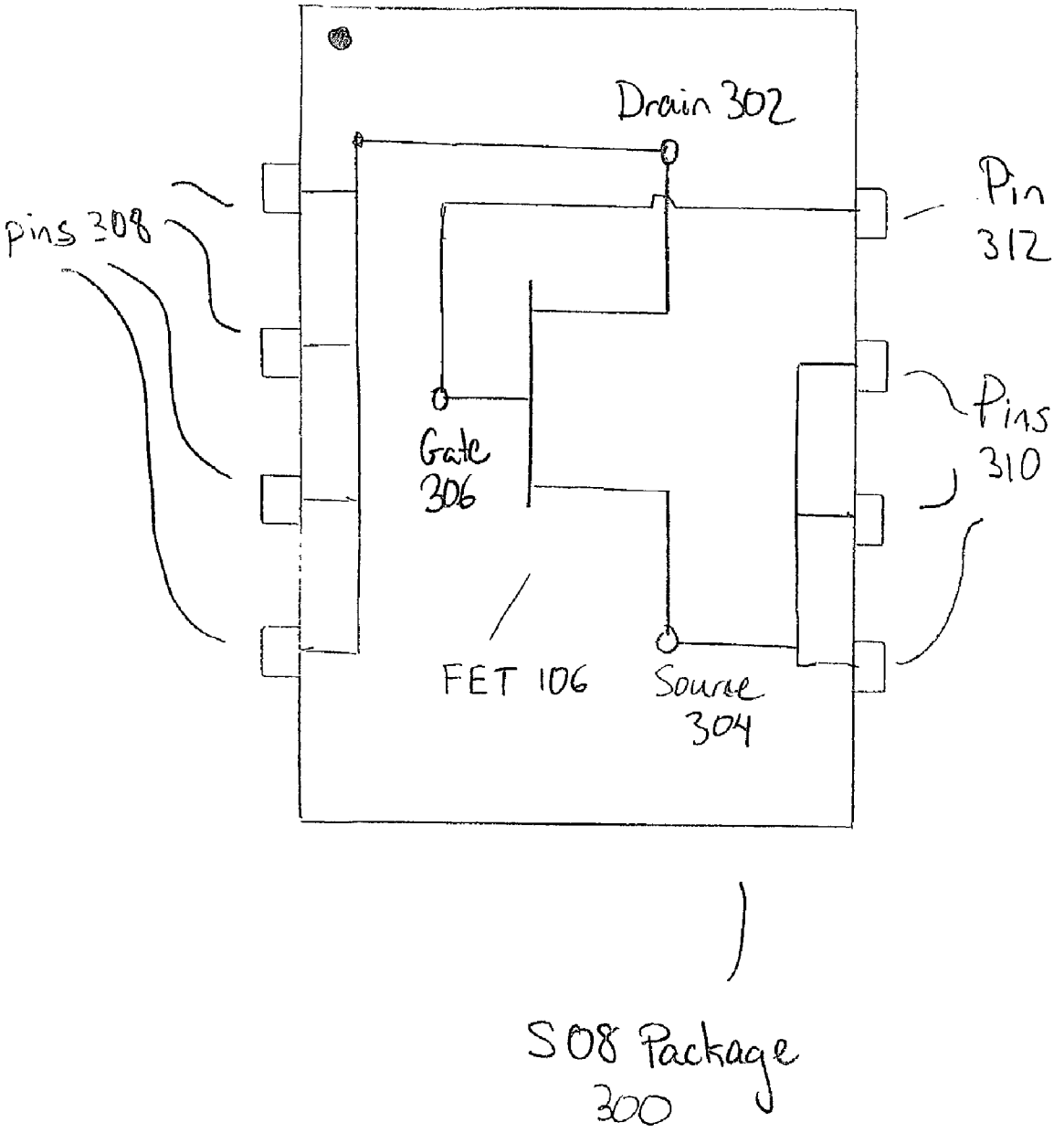
Drain 302
pins 308
Pin 312
Pins 310
Gate 306
FET 106
Source 304
S08 Package 300

FIGURE 3A

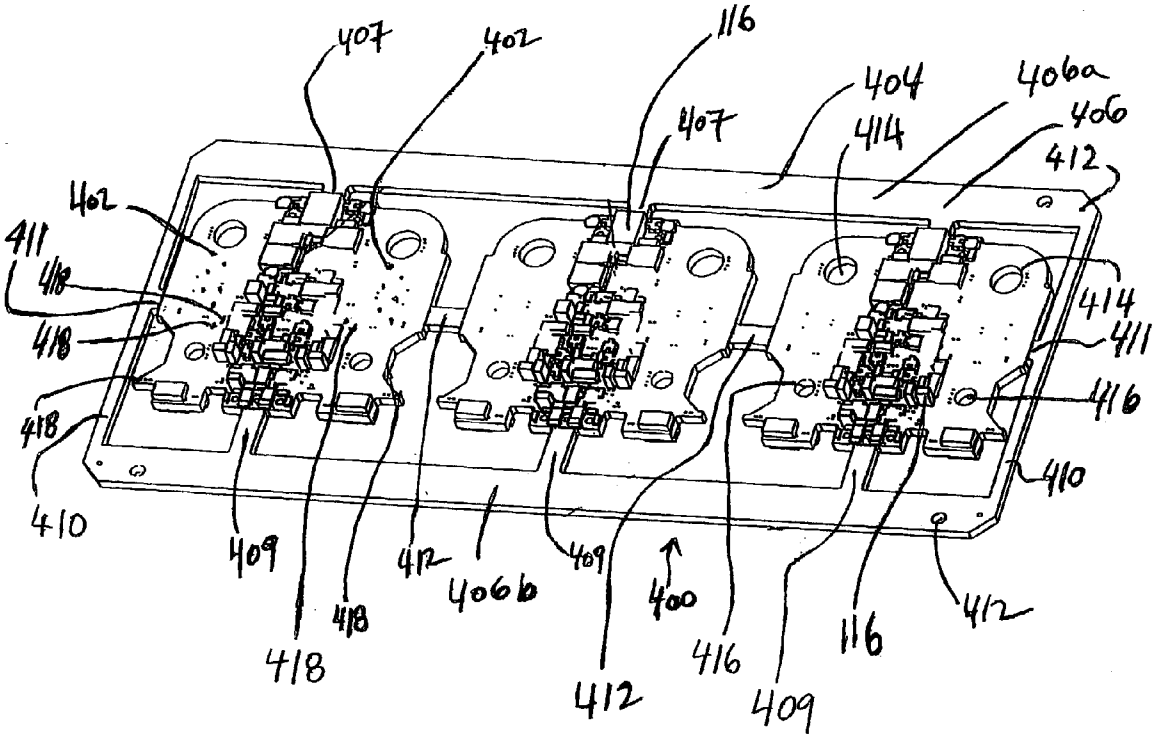
407
402
116
404
406a
406
407
414
412
402
411
418
418
418
410
414
411
416
410
409
412
406b
409
400
418
418
412
416
116
412
409

FIGURE 4

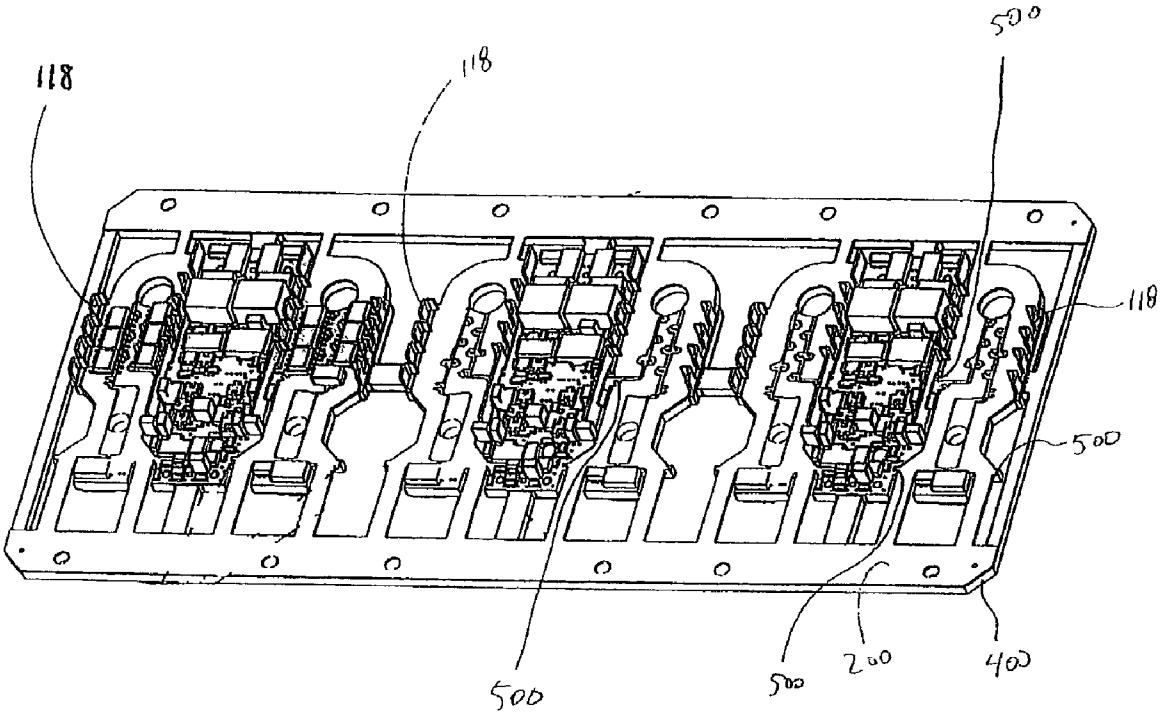

FIGURE 5

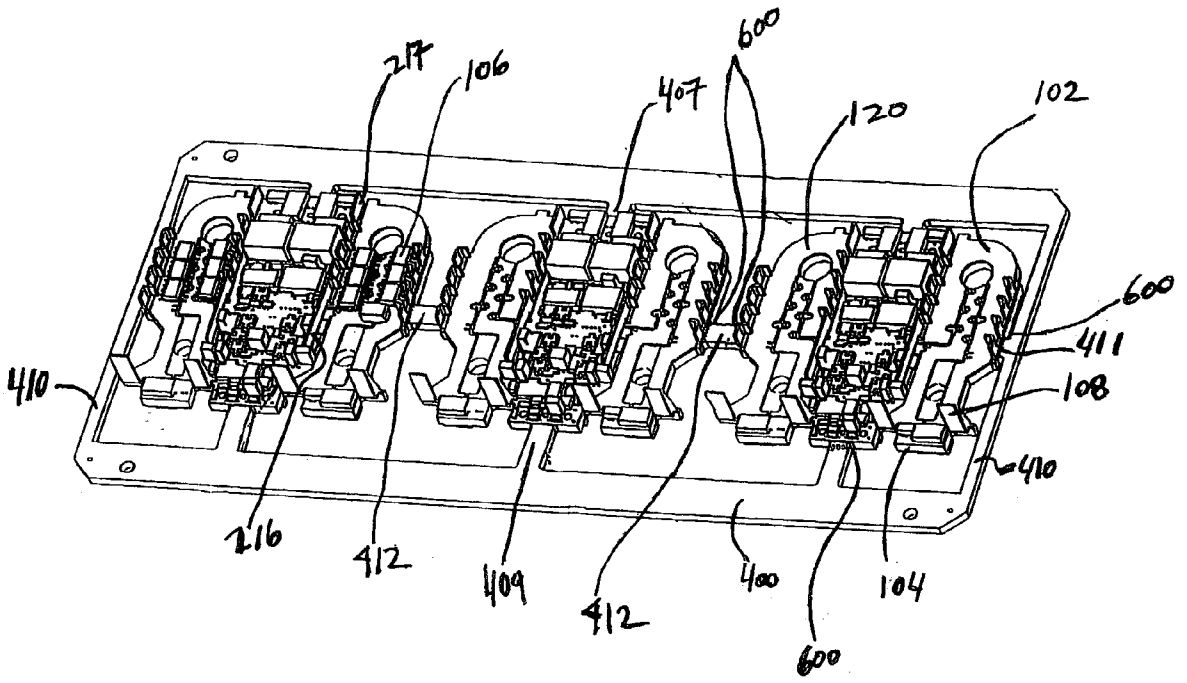
217
106
407
600
120
102
600
411
108
410
410
216
412
409
412
400
104
600

FIGURE 6

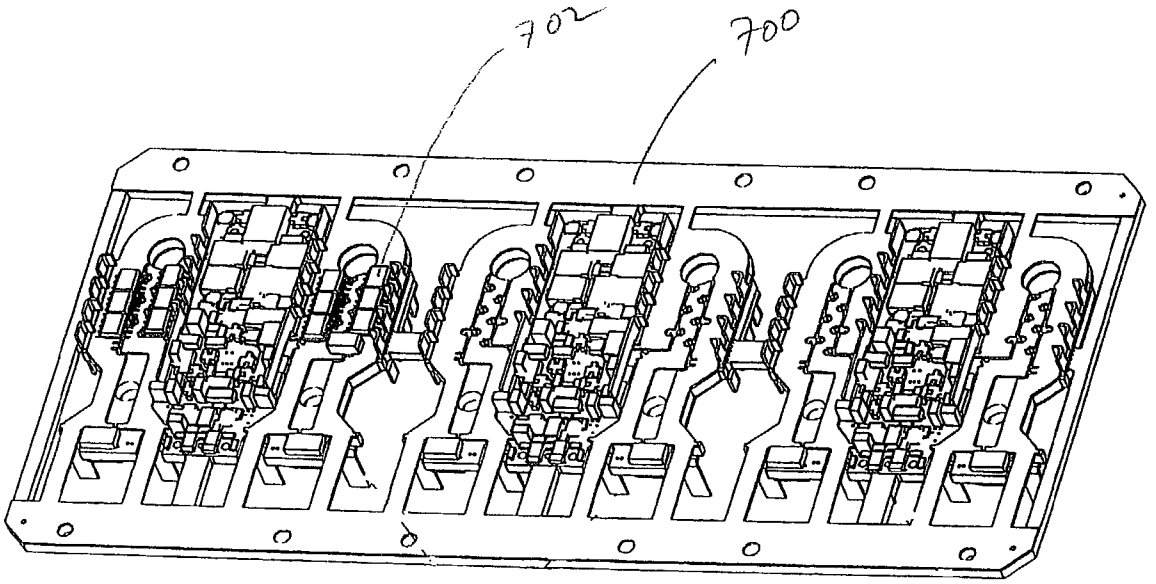

FIGURE 7

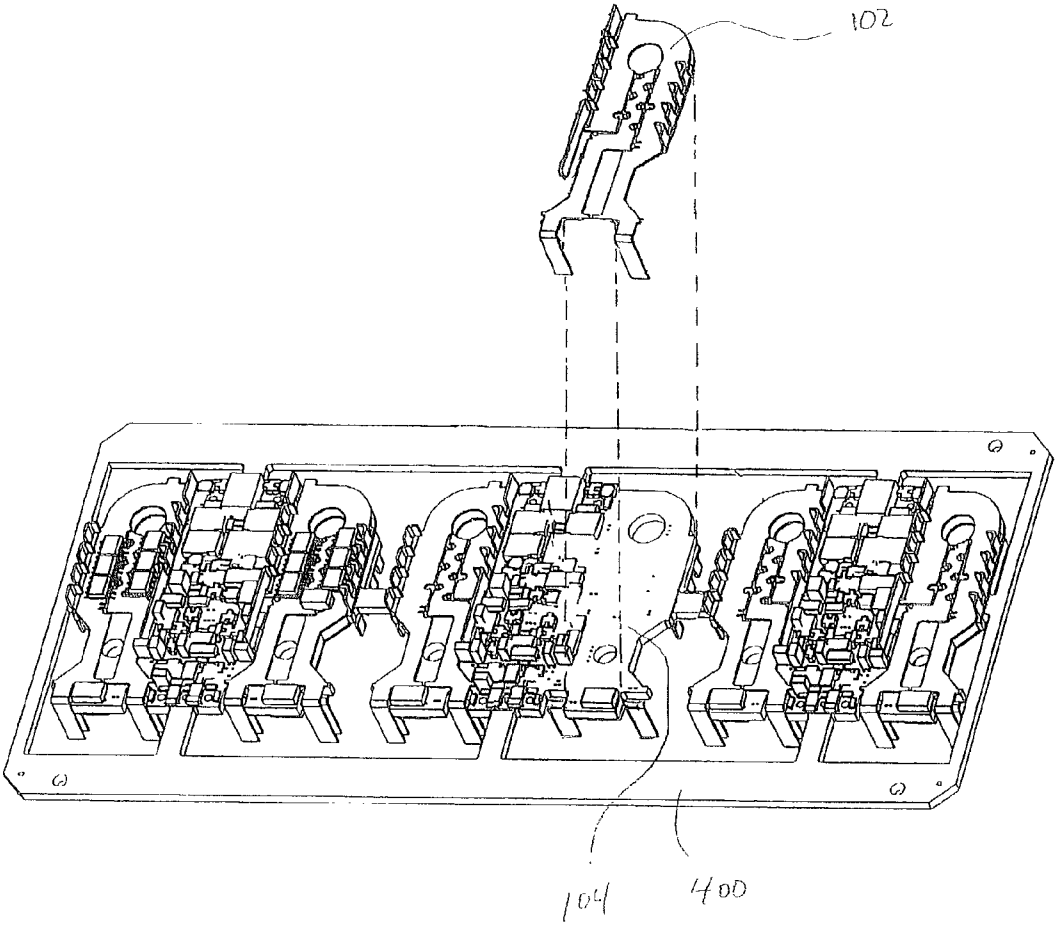

FIGURE 8

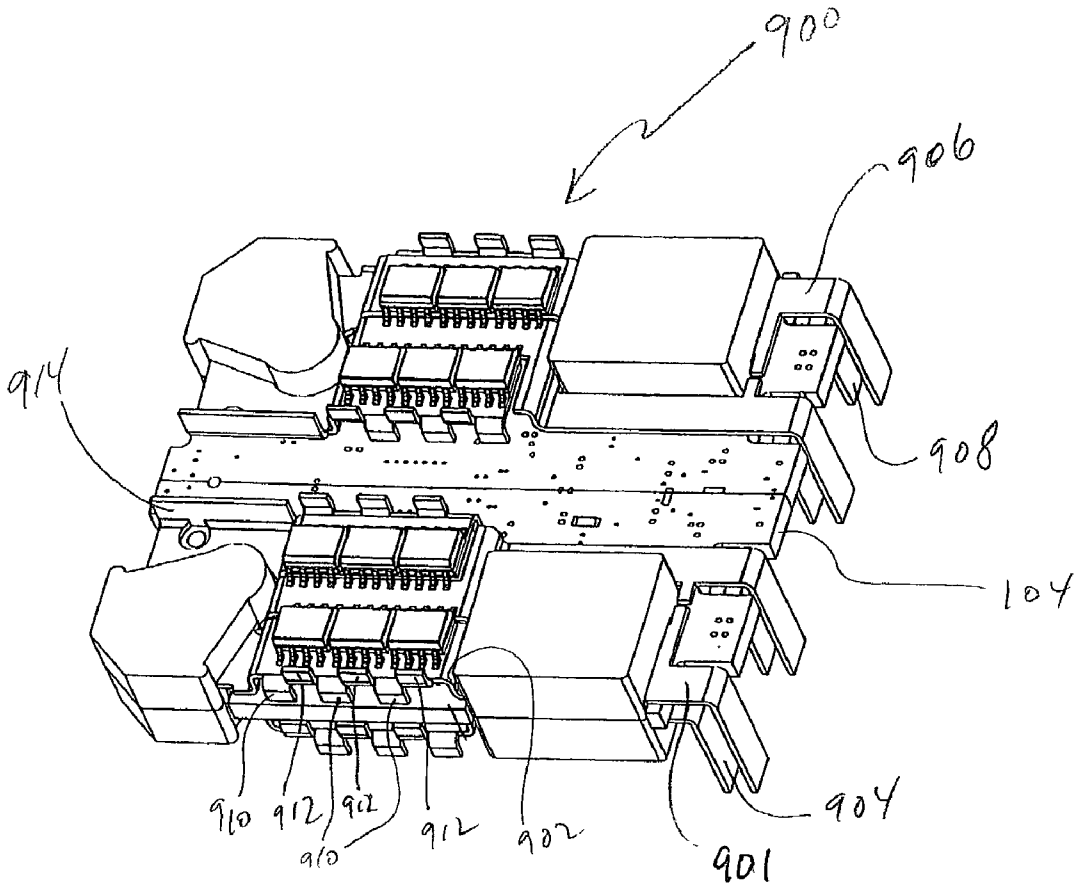

Figure 9A

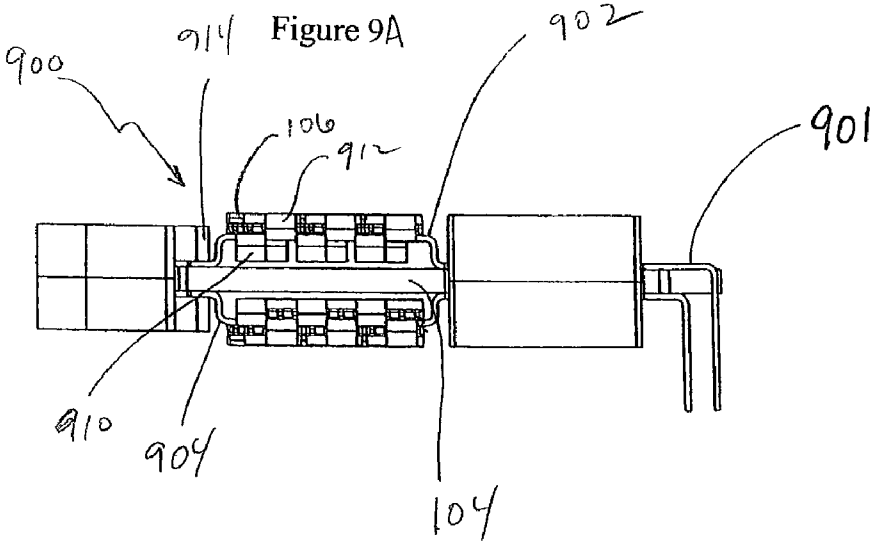

FIGURE 9B

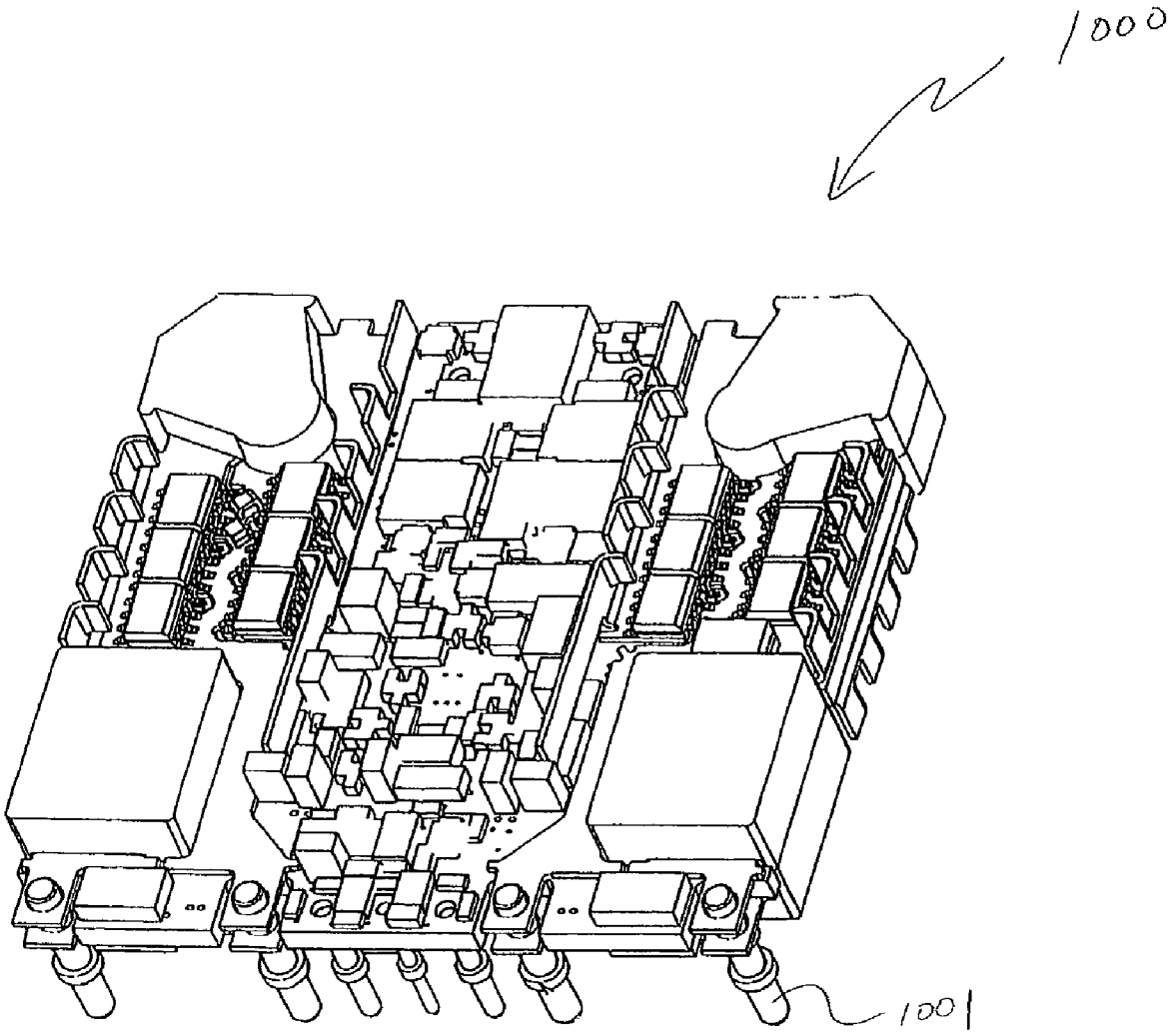

FIGURE 10

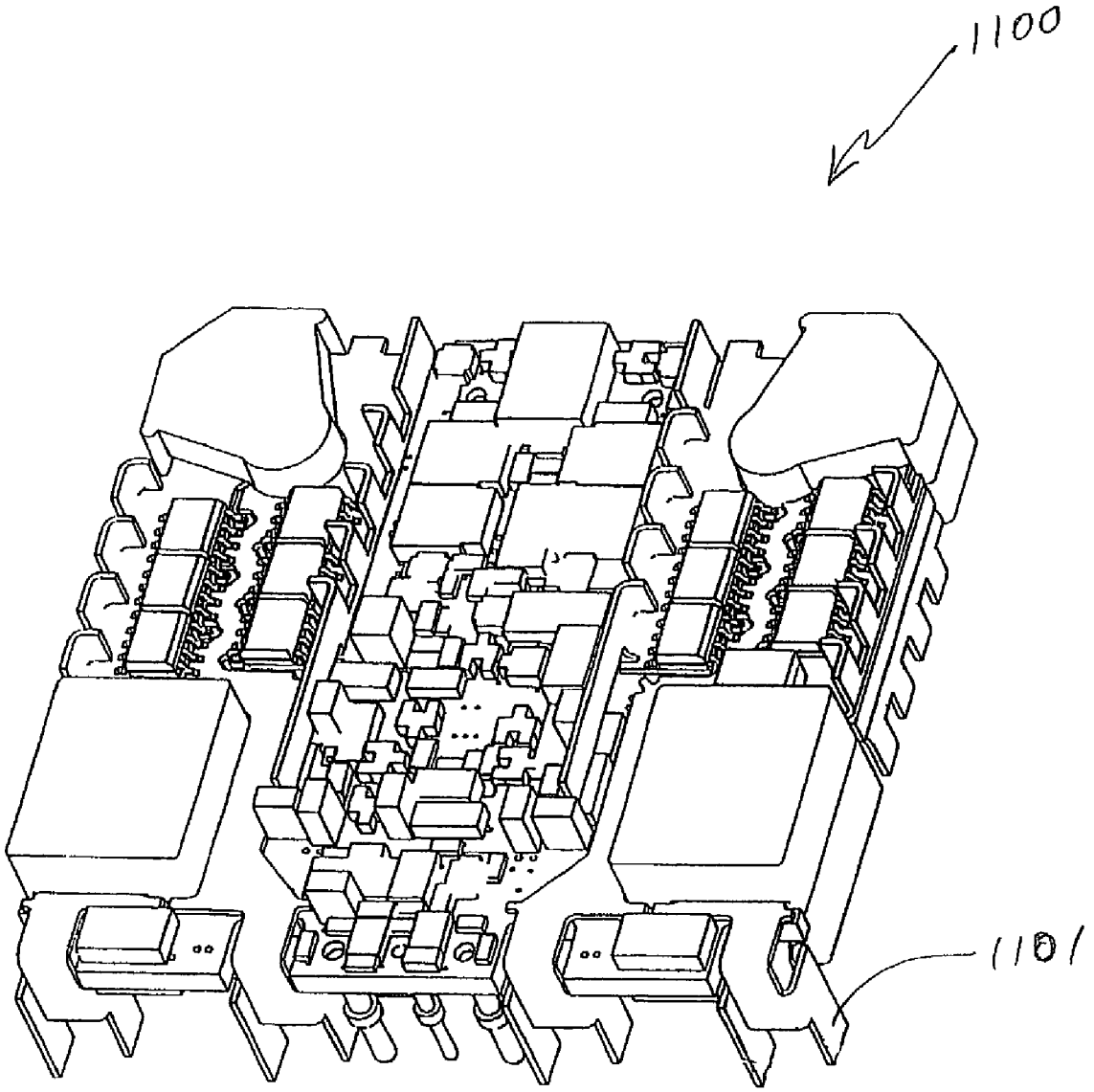

FIGURE 11

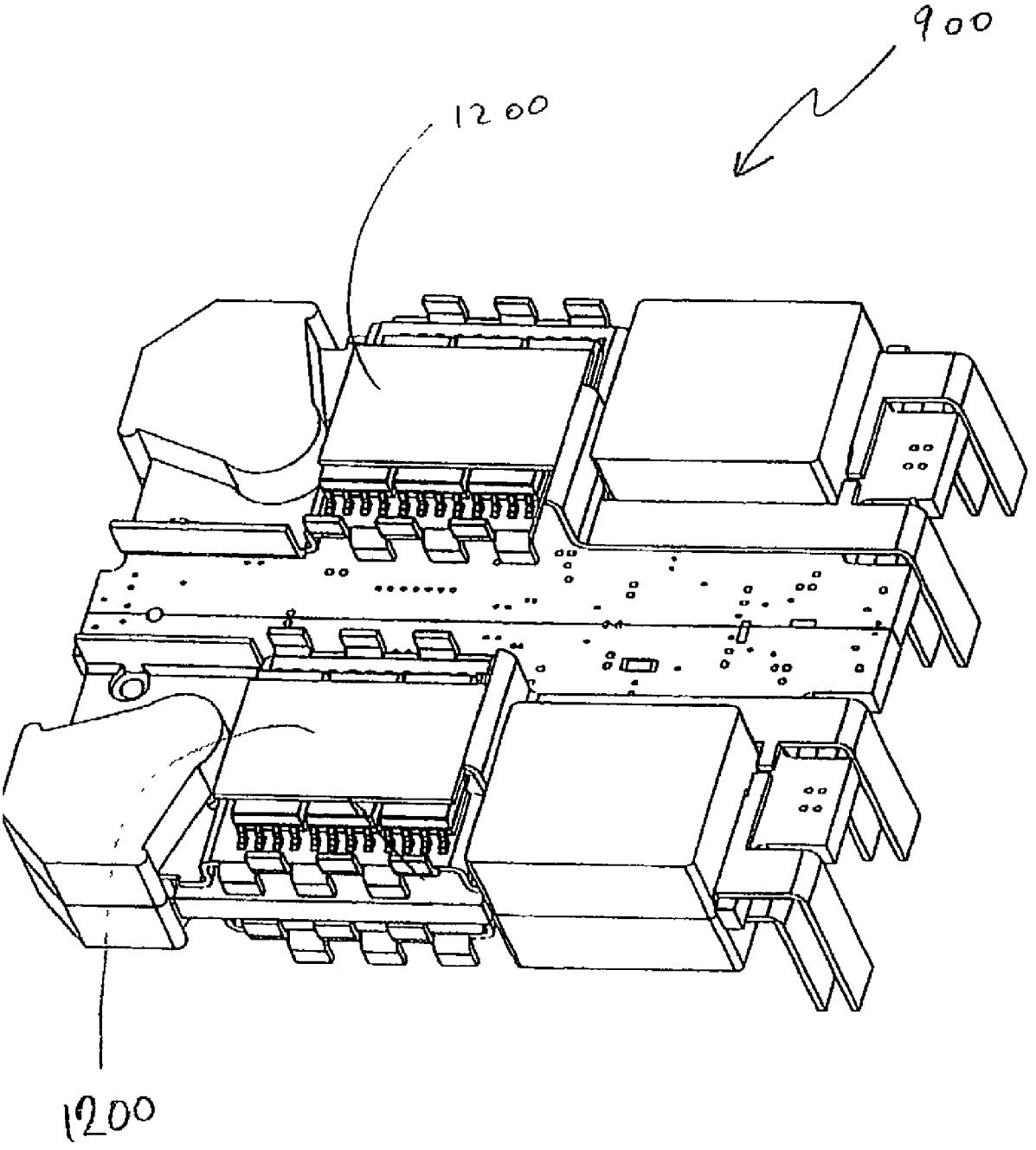

FIGURE 12

COMPONENT SUBSTRATE FOR A PRINTED CIRCUIT BOARD AND METHOD OF ASSEMBYLING THE SUBSTRATE AND THE CIRCUIT BOARD

FIELD OF INVENTION

The invention relates generally to the field of electronic modules and methods of assembling same. In particular, the invention relates to devices and methods of assembly relating to components for printed circuit boards ("PCBs").

BACKGROUND OF INVENTION

As is known in the art, a PCB embodies an electrical circuit which includes electrical components. In addition to functional characteristics of the circuit, operational characteristics, such as form factor, heat dissipation, track sizes and weights, must adequately be considered for the circuit contained in the PCB. For example, for a power converter PCB, power conversion components in the circuit generate significant amounts of heat, which must be properly dissipated. Also, the electrical tracks in the PCB for the circuit must be large enough to handle the high currents flowing therethrough.

Many PCBs utilize surface mount component technologies. These relatively small components generally have fine track widths on an exposed surface of a PCB. However, in order to obtain fine track widths, a relatively thin layer of copper must be used on the surface of the PCB. Generally, a thin layer of copper will not have the heat dissipation nor the current carrying capabilities of a thicker layer of copper. As well, as assemblies of electronic components become more complex, resort must be had to an increasingly greater number of substrate layers in a typical PCB. In many instances, conductive layers within such multilayer PCBs are thinner than their counterparts in PCBs which contain fewer layers.

All of the foregoing creates challenges and constraints for size reduction, heat dissipation and current carrying capability in the design and manufacture of assemblies of electronic components. There is therefore a need for an assembly that can carry relatively high electrical currents, that can dissipate heat for components mounted onto a PCB and that can be presented in a relatively compact size as compared to the existing art.

SUMMARY OF INVENTION

In a first aspect of the invention, a circuit module is provided. The module includes an electrical component and a substrate formed from a stamping process. The substrate has an exposed layer of electrically conductive material. One terminal of the component is attached to the exposed layer and the circuit module is attached to a circuit board to complete an electrical circuit on the circuit board.

The substrate may include a first portion and a second portion located apart from the first portion. One terminal of the component may be attached to the first portion and another terminal of the component may be attached to the second portion.

A nib may be provided on the second portion, with the second terminal attached to the nib and the nib being excisable from the second portion.

The electrical circuit may be a power conversion circuit with the substrate comprising a part of a winding associated with the power conversion circuit.

The circuit module may be attachable to the circuit board by a soldering process.

Also, the substrate may be adapted to transfer heat from the circuit board. Further, the substrate may have at least one fin to transfer heat from the circuit board. Also, the substrate may have a raised portion providing a space between the raised portion and the PCB when the substrate is attached to the PCB. Also, the substrate may have a thickness enabling it to carry an electrical current of at least 5 amperes.

In a second aspect, an electronic module is provided. The module consists of a circuit board, a substrate attached to a location on a surface of the circuit board and an electrical component carried on the substrate. The substrate is formed from a stamping process, is adapted to dissipate heat from the circuit board and completes a part of an electrical circuit on the circuit board.

The electrical circuit may be a power conversion circuit and the substrate may be a part of a winding associated with the circuit.

The substrate may have a first portion and a second portion located apart from the first portion, with a terminal of the electrical component attached to the first portion and another terminal of the component attached to the second portion.

For the module, the electrical component may be a transistor.

Further, the substrate may have at least one fin.

Further still, the substrate may be attached to the circuit board by a soldering process.

In a third aspect, a substrate blank is provided. The blank comprises a substrate which can be attached to a location on a circuit board and a frame connected to the substrate. There is an alignment register on the frame which facilitates locating the substrate at the location on the circuit board.

The frame may have a first rail and a second rail in a spaced relationship thereto, with the substrate located between the first and second rail.

The alignment register may be an opening in the frame, which is co-operable with a corresponding alignment register in the circuit board.

The substrate may carry an electrical component.

Further still, the substrate may have a first portion and a second portion located apart from the first portion, with the electrical component attached to the first portion and the second portion.

In a fourth aspect, a system of components for assembling an electronic module is provided. The electronic module includes a circuit board and a substrate mounted at a location on the circuit board. The system includes a first frame having both the substrate and a first alignment register and a second frame having both the circuit board and a second alignment register. The first and second alignment registers enable the substrate to be aligned at the location of the circuit board when the alignment registers co-operate with each other.

The substrate may carry an electrical component.

The substrate may have a first portion and a second portion located apart from the first portion, with the electrical component is attached to the first portion and the second portion.

In other aspects the invention provides various combinations and subsets of the aspects described above.

BRIEF DESCRIPTION OF DRAWINGS

For the purposes of description, but not of limitation, the foregoing and other aspects of the invention are explained in greater detail with reference to the accompanying drawings, in which:

FIG. **1**A is a perspective view of a PCB and a populated substrate for a power conversion module in accordance with an embodiment of the invention;

FIG. **1**B is a schematic of a portion of a power conversion circuit of the power conversion module of FIG. **1**A;

FIG. **2**A is a perspective view of a lead frame of unformed, partially populated substrates of FIG. **1**A;

FIG. **2**B is a perspective view of the lead frame of FIG. **2**A after excising and forming;

FIG. **3**A is a schematic diagram of a SMT package of a FET used in the power conversion module of FIG. **1**A;

FIG. **3**B is an exploded view of the lead frame of FIG. **2**B illustrating excised portions of a substrate of FIG. **2**B;

FIG. **4** is a perspective view of a blank of partially populated PCBs from which the PCB of FIG. **1**A is provided;

FIG. **5** is a perspective view of an assembly of the lead frame of FIG. **3**B mounted to the blank of PCBs of FIG. **4**;

FIG. **6** is a perspective view of the assembly of FIG. **5** with handling rails of the lead frame removed;

FIG. **7** is a perspective view of the assembly of FIG. **6** having a second lead frame mounted thereto;

FIG. **8** is a perspective view of the assembly of FIG. **7** with the second lead frame removed, and a substrate shown in exploded view;

FIG. **9**A is a perspective view of an assembly of a PCB and a populated substrate in accordance with another embodiment;

FIG. **9**B is a side view of the assembly of FIG. **9**A;

FIG. **10** is a perspective view of a variation of the assembly of FIG. **1**A wherein interconnect pins are used;

FIG. **11** is a perspective view of another variation of the assembly of FIG. **1**A wherein extended tabs are rotated; and

FIG. **12** is a perspective view of the assembly of FIG. **9**A having an additional substrate mounted to the substrate.

DETAILED DESCRIPTION OF EMBODIMENTS

The description which follows, and the embodiments described therein, are provided by way of illustration of an example, or examples, of particular embodiments of the principles of the present invention. These examples are provided for the purposes of explanation, and not limitation, of those principles and of the invention. In the description which follows, like parts are marked throughout the specification and the drawings with the same respective reference numerals.

Referring to FIG. **1**, an electronic module in the form of assembled DC to DC power converter **100** is shown according to an embodiment of the invention. Power converter **100** is provided to illustrate aspects of the embodiment. It will be appreciated that other modifications, adaptations and variations of the embodiments disclosed herein may be made without departing from the scope of the invention. Accordingly, the invention is not limited to electronic modules in the field of power converters.

As shown, power converter **100** includes four substrates **102** (**102***a* and **102***b*) and **120** (**120***a* and **120***b*) mounted to a printed circuit board ("PCB") **104** with two substrates mounted on each side of PCB **104**. Substrate **120** has a mirror image configuration of substrate **102**. Unless the particular context suggests otherwise, reference in the following description to substrate **102** may also include substrate **120**. Each substrate **102** carries electrical components, which, in the particular example as shown, are field effect transistors **106** ("FETs"). Substrate **102** is configured to carry FETs **106**, and substrate **102** forms a portion of an electrical circuit for FETs **106**, a power source (not shown), and PCB **104**. In this configuration, substrate **102** defines a single-layer circuit track which connects to a circuit defined in the layout of PCB **104**. As described in greater detail below, portions of the circuit track in substrate **102** provide windings for transformer **112** and inductor **114**. It will be appreciated that in other embodiments, electrical components may include typical analog and digital packaged devices such as resistors, capacitors, inductors, transistors, op-amps, LSI components, VLSI components and hybrids of analog and digital components. The foregoing list of devices is not exhaustive. It will be appreciated that in this art a substrate populated with any electrical component may be referred to as a circuit module and that a printed circuit board is also known as, simply, a circuit board.

In the embodiment, power converter **100** generates a lower voltage, high current, power signal from a higher voltage, lower current, input voltage signal. Typical applications of the embodiment take a 24V signal and generate a 1.8V signal at 100 A. Other conversion applications can also be implemented. In the power conversion circuit in power converter **100**, power (at 24V) is provided from a suitable power source. Power is provided to terminals (hidden in FIG. **1**), which are similar to terminals **110**, but are located at the back of PCB **104**. Referring to FIGS. **1**A and **1**B, the input voltage signal is applied to the primary windings **112**A of transformer **112**. The primary windings are embedded in internal tracks in internal layers in PCB **104**. The secondary winding **112**B of transformer **112** is formed by a portion of substrate **102** which is encapsulated by core **112**C of transformer **112** within its casing. The signal carried from the secondary **112**B winding is regulated by FETs **106** and is then provided to inductor **114**. Inductor **114** is formed by a part of substrate **102** which is encapsulated by core **114**A contained casing **114**B of inductor **114**. The output of inductor **114** is the final output of power converter **100**, and is provided to leads **108**. Leads **108** are mountable into a power bus (not shown) and can be soldered into place.

It will be appreciated that transformer **112** and inductor **114** both belong to a family of signal transforming components which are known in the art as "magnetics". Magnetics typically have a winding such a winding **112**A and **114**A interacting with a magnetic core, such as **112**C and **114**B respectively. The main feature of a magnetic is the winding. Other variants on magnetics include having a winding which is associated with an air core. As such, for brevity, any general reference herein to transformer **112** and inductor **114** may use the term "magnetics", unless otherwise specifically noted.

When FETs **106** are powered, heat is generated. Heat may also be generated by PCB **104** and components mounted thereon, as well as, but to a lesser extent, by transformers **112** and **114**. To remove heat from FETs **106** and PCB components **116**, substrate **102** is adapted to encourage the dissipation of the heat. In particular, heat dissipation fins **118** are provided in substrate **102**. In such a configuration, substrate **102** functions as a heat sink.

Referring to FIGS. **2**A to **8**, the manufacturing and assembly process of power converter **100** is described. First, substrates **102** and PCBs **104** are separately formed from separate blanks. Each blank contains a number of identical

PCBs (and substrates) carried in a frame. Each PCB (and substrate) is populated with a set of its components. Fins **118** are then bent and formed in the substrate blanks. The blanks then are mated together and the individual PCBs and substrates **104** are excised from their frames.

Specifically referring to FIG. **2**A, a blank, or web, in the nature of a lead frame **200**, forms an array of substrates **102**. Lead frame **200** shares some aspects with known lead frames. Known lead frame assemblies are used for manufacturing microelectronic components such as semi-conductors or integrated circuit chips. Such lead frame assemblies generally consist of a frame having sets of interior leads connected to the frame and a carrier. Generally, the frame is flat. An integrated circuit die is typically mounted upon the carrier. Electrical connections are made from the leads by fine electrically conductive bonding wires to locations on the circuit. Once the inner connections are made, the dies are encapsulated in a protective resin. The leads are then excised, and the integrated circuit is separated from the lead frame. External ends of the leads form the connection elements to connect the integrated circuit with other electronic components, such as electronic components mounted to a PCB.

For manufacturing efficiency, lead frame **200** includes three pairs of substrates **102**. In the embodiment, lead frame **200** includes three pairs of aligned substrates **102** and substrates **120**. This layout is set to align each substrate pair to be aligned with a corresponding PCB in PCB frame **400**, as shown in FIG. **5**. Substrates **102** are supported by a framework **202** which forms part of the lead frame **200**. Framework **202** is mounted to or integrally formed with substrates **102**, and serves to maintain substrates **102** in a predetermined orientation for later mounting to PCB **104**. The term "framework" is used herein interchangeably with the term "frame". Again, in the embodiment, substrates **120** share similar physical and dimensional features of substrates **102**, but for the layout of substrates **120** being a mirror image of substrates **102**.

Lead frame **200** is preferably stamped from a single sheet of material such as a deformable and (electrically and thermally) conductive metal. Stamping is a relatively inexpensive manufacturing process. The sheet has a uniform thickness T to provide uniformity of substrates **102** which form a part thereof. In other embodiments, uniformity of the array may differ. In the embodiment, a bare copper sheet is used for lead frame **200**. Other forming techniques maybe used to form lead frame **200** in other embodiments.

As is well known in the art, the amount and dimensions of copper used in a substrate affects the amount of electric current that can be carried by the substrate. As noted above, when portions of substrate **102** function as transformer windings, a significant amount of current may have to be carried. Accordingly, the cross-section dimensions and length of the copper sheet used for lead frame **200** is determined based in part on the amount of current to be carried. For example, as one component of the cross-section dimensions, for the substrate **102** as shaped, a thickness T of about 24 thousandths of an inch ("thou") will allow the substrate **102** to carry about 100 amperes, and a thickness T of about 12 thou will allow it to carry about 50 amperes. It is desirable to have a sufficient thickness to provide a cross-section which allows carrying of the amperage load of the related circuit. Other circuits may have lower amperage ratings of, for example, 5, 10, 15, 20 and 25 amps. While placing a relatively thick layer of copper on the surface of a PCB is possible, such an arrangement reduces the ability to provide fine track copper widths on the PCB surface. As such, SMT components, which generally are used with fine copper track widths, may not be efficiently placed on the PCB. Alternatively, burying the thick copper layer within the PCB does not allow effective dissipation of heat carried in the encapsulated copper layer, and will tend to reduce the number of substrate layers available for other design purposes.

Alternatively, depending on the particular function or functions to be performed by substrate **102**, lead frame **200** may also be made of other material such as a ceramic, which is not necessarily electrically or thermally conductive. For example, substrate **102** may be used as a mere carrier for components without substrate **102** forming any direct electrical connection with PCB **104**.

As noted above, lead frame **200** is stamped from a single sheet of material to form a generally planar blank having one or more substrates **102** and a framework **202** connecting and aligning the substrates **102**. Framework **202** includes handling rails **204** or simply rails **204**, for holding by, or engagement with, assembly machinery (not shown). In the embodiment, two generally parallel rails **204**A and **204**B are formed during the stamping process with substrates **102** defined therebetween. Rail **204**A is connected to each substrate **102** via tabs **208**, and rail **204**B is connected to each substrate **102** by tabs which may be later formed into power leads **108**.

Rails **204** may have one or more alignment elements in the nature of registers or mounting holes **206** defined therein. Mounting holes **206** permit the assembly machinery to engage lead frame **200** to facilitate alignment and mounting of lead frame **200** to a corresponding PCB frame **400** (see FIG. **4**). In particular, one method of assembly and alignment of a PCB frame **400** to a lead frame **200** may be to use a base (not shown) having posts to co-operate with mounting holes in PCB frame **400** and lead frame **200**. Accordingly, PCB frame **400** may be mounted onto the base by aligning the holes in the PCB frame **400** over the posts, then lead frame **200** may be mounted and aligned to PCB frame **200** in a similar manner. Accordingly, frame **200** may be referred to as an alignment frame.

The basic physical elements of each substrate **102** may be defined by the die of the stamp for the blank. As can be seen in FIG. **2**, fins **118** are defined in the blank. When substrate **102** is made from a deformable, thermally conductive material, fins **118** can be bent upward from lead frame **200** to enhance the heat dissipation abilities of substrate **102**. Excising and forming is done on lead frame **200** using techniques and tools known in the art. For example, a fin such as elongate fin **216** or elongate fin **217** may be formed in substrate **102**. For increased transfer of thermal energy away from substrate **102**, elongate fins **216** and **217** each have a greater surface area than fins **118**. As shown in FIG. **6**, elongate fins **216** and **217** also generally fit within the general volume otherwise occupied by power converter **100**. The number of fins **118**, **216** and **217** may also be varied to affect thermal transfer from substrate **102**. While fins **118** are shown as being generally rectangular, other sizes and shapes may be applied depending on heat transfer requirements of power converter **100** and on physical space limitations of the intended application to which power converter **100** will be applied.

Power leads **108** also serve to dissipate heat from power converter **100**. Even if fins **118**, **216** and **217** or power leads **108** are not included with substrate **102**, the substrate **102** itself, when made of a thermally conductive material, can draw heat away from FETs **106**. Further still, if substrate **102**

is not made of a thermally conductive material, it may still be configured to perform any one or more of the other functions described herein.

Substrate **102** has a first portion **210**A and a second portion **210**B, each of which is initially physically isolated from the other by a space except for a lead frame rail section **211** therebetween (this section **211** is removed with rails **204** in a later stage of manufacture). Substrate portions **210**A and **210**B co-operate to define an opening **218**, for receiving a transformer core (not shown) of transformer **112**, and an opening **220**, for receiving a core (not shown) of inductor **114**. Other shaped spaces, gaps and openings may be provided in other embodiments by differently shaped first and second portions of substrate **102** for alternative design, heat transfer or component placement requirements.

As indicated earlier, substrate **102** forms one secondary winding **112**B for transformer **112**. The section of substrate **102** which forms winding **112**B is indicated at section **210**A(A). Similarly, the section of substrate **102** which forms winding **114**B of inductor **114** is shown at section **210**A(B). Accordingly, substrate **102** is an active part of the power conversion circuit of power conversion module **100**. It will be appreciated that in other embodiments, a substrate similar to substrate **102** may be incorporated into a different electrical circuit and that the substrate may have different electrical components attached thereto.

After the lead frame **200** is stamped, it may be placed for processing onto assembly machinery such as a conveyor system. Alternatively, lead frame **200** may be processed manually. Whether processed manually, using an automated system, or some combination thereof, lead frame **200** is then populated with FETs **106**. However, it will be appreciated that more manufacturing efficiencies will be possible, generally, with an automated manufacturing procedure. Lead frame **200** advantageously permits direct component attachment using existing machinery, whether the components are encapsulated or not. When substrate **102** is attached or mounted to PCB **104**, it effectively increases the surface area of PCB **104** so that the number of components, such as FETs **106**, that can be attached to PCB **104** is increased while not changing a footprint of the PCB. When populated in this manner, substrate **102** functions as an external, exposed circuit to PCB **104**. In the embodiment, FETs **106** are populated onto the lead frame **200** using known surface mount technology ("SMT") component populating and soldering techniques. As described above, lead frame **200** also has alignment elements enabling the lead frame **200** to be aligned with a corresponding set of PCBs in a corresponding PCB frame, to facilitate manufacturing and assembly of the PCB and its components. When FETs **106** are soldered onto lead frame **200**, FETs **106** are rigidly connected to the lead frame, allowing FETs **106** to be securely attached to the lead frame, regardless of the spatial orientation of FETs **106** relative to the lead frame. For example, FETs **106** may be mounted on an underside of a substrate.

Referring to FIG. **3**A, FETs **106** are each embodied in a typical SMT S**08** package **300**. An exemplary FET **106** comprises a drain terminal **302**, a source terminal **304** and a gate terminal **306**. FET **106** operates as per known FETs. Within S08 package **300**, drain terminal is connected to pins **308**, source terminal **304** is connected to pins **310** and gate terminal is connected to pin **312**. As described in greater detail below, nib **224** is later excised from substrate **102** to electrically isolate the associated pin **312** from its previously attached substrate portion **210**A or **210**B, as the case may be. The remaining pins **308** and **310** on either side of SMT package **300** of FET **106** remain connected to substrate portion **210**A or **210**B (depending on the side of FET **106** that the leads **222** are associated with). Accordingly, pins **308** are electrically shorted together on either side of substrate portions **210**A and **210**B and pins **310** are also electrically shorted together on either side of substrate portions **210**A and **210**B. When FETs **106** are mounted to substrate **102**, they are located to having their pins bridge substrate portions **210**A and **210**B. Each pin **308**, **310** and **312** makes physical and electrical contact with a landing and are soldered, bonded or otherwise fixed to landings on substrate **102**. Substrate **102** is also formed to include nib **224** for connection to pin **312** of package **300** of FET **106**.

FET **106** straddles substrate portions **210**A and **210**B. This configuration permits a circuit to be completed between portions **210**A and **210**B via the contacting pins of FETs **106** when populated substrate **102** is mounted to a PCB **104**. As a result, substrate **102** forms part of an operable circuit in addition to forming part of the windings of transformer **112**. Accordingly, substrate **102** with mounted FET **106** may be considered to be a circuit module. Alternatively, if substrate **102** is not populated with FETs **106**, substrate **102** may still form a portion of a circuit when combined with PCB **104**. It will be appreciated that for a given circuit configuration and a given lead layout for a FET **106** (or other component), the arrangement of leads which are attached to the portions, and those which are excised, vary depending on the circuit.

Referring to FIG. **2**B, the lead frame **200** of FIG. **2**A is shown after it has been excised and formed. Fins **118** are bent from the plane of lead frame **200** so that they are oriented generally perpendicular to the plane of lead frame **200**, and are generally oriented in the same direction. Fins **118** are preferably oriented away from the side of lead frame **200** which will be mounted to PCB **104**. This configuration encourages the dissipation of thermal energy away from substrate **102** and PCB **104** (when PCB **104** is mounted to substrate **102**). Elongate fins **216** and **217** may be similarly bent. The fins, for example fins **118**, may be bent at a second location to locate at least a portion thereof closer to the components, for example FETs **106**, from which thermal energy is to be drawn (see also FIG. **5**).

Referring additionally to FIG. **3**A, nibs **224** are excised from substrate **102** to isolate attached FET lead **222** from associated portion **210**B. Excising may be done by using a punch tool (not shown) to sever nib **224** from substrate **102**. Alternatively, substrate **102** may be trimmed or drilled therethrough in a location adjacent each nib **224**. Any other suitable method as is known in the art may also be used to excise nib **224** from substrate **102**.

While nib **224** is excised from substrate **102** it is still attached on one side to a FET lead **222**. The other side of nib **224** will be aligned and soldered to a land **402** (see FIG. **4**) of PCB later in the manufacturing process. When substrate **102** is mounted to PCB **104**, excised nib **104** functions as a riser and serves to span the space between FET lead **222** and land **402**, thereby electrically connecting FET **106** to PCB **104**. This structure may similarly be used to connect PCB **104** to other components (not shown) which are mounted to substrate **102**, in order to create a conductive interface between substrate **102** and PCB **104**.

Alternatively, components such as FETs **106** which are mounted to substrate **102**, may have a particular lead thereof electrically connected to PCB **104** by using an extended leg (not shown) that is dimensioned to span the distance between FET **106** and PCB **104**. If this configuration is employed, then a pathway or void (not shown) defined by substrate **102** is located for each extended leg to pass therethrough for connection to PCB **104**. In a further alter-

native (not shown), a conductive material, such as solder or a post, may be added to FET lead **222** so that it may span thickness T of substrate **102** to electrically connect to PCB **104**. If solder is used, then sufficient solder material should be provided to ensure that after reflow there is enough solder to form an electrical connection between FET **106** and PCB **104**.

Referring to FIG. **4**, a blank or web in the nature of a PCB frame **400** is used to form PCB **104**. For manufacturing efficiency, PCB frame **400** includes multiple PCBs **104**. In the embodiment, PCB frame **400** includes three aligned PCBs **104**. This configuration permits each PCB **104** to be aligned with a corresponding lead frame **400**, as shown in FIG. **5**. PCBs **104** are supported by a framework **404** which forms part of the PCB frame **400**. Framework **404** is mounted to or integrally formed with PCBs **104**, and serves to maintain PCBs **104** in a predetermined orientation for later mounting to substrate **102**.

PCB frame **400** is preferably manufactured as a single part including PCBs **104**. Any appropriate PCB manufacturing process known in the art may be used. A preferred configuration of PCB frame **400** permits multi-layer PCBs **104** to be manufactured using such processes as are known in the art. Once PCB frame **400** is manufactured, it is populated with PCB components **116**. Preparation of PCB frame **400** may be carried out using known manufacturing equipment and methods, including those which employ surface mount technology.

PCB framework **404** has rails **406** for holding by, or engagement with, assembly machinery (not shown). Two generally parallel rails **406***a* and **406***b* are formed during the PCB framework manufacturing process, with PCBs **104** located therebetween. Rail **406***a* is connected to each PCB **104** via tabs **407**, and rail **406***b* is connected to each PCB **104** by tabs **409**. Spanners **410** connect rails **406***a* and **406***b*. Transverse tabs **411** connect spanners **410** to adjacent PCBs **104**. A spanner **410** is located at either end of PCB framework **404**. Additional transverse tabs **411** form interconnections between adjacent PCBs **104** of PCB framework **404**.

Rails **406** have one or more mounting holes **412** defined therein. Mounting holes **412** permit the assembly machinery to engage PCB frame **400** to facilitate alignment and mounting of PCB frame **400** to a corresponding lead frame **200**.

Each PCB **104** has portions defining openings **414** for receiving a transformer core (not shown) of transformer **112**, and openings **416** for receiving a transformer core (not shown) of transformer **114**. Windings (not shown) are sandwiched within each PCB and encircle openings **414** and **416**. Each winding of PCB **104** co-operates with a respective winding of the magnetics of transformer **112** and inductor **114**, as noted earlier.

Referring to FIG. **5**, excised and formed lead frame **200** is mounted by soldering to PCB frame **400**. Lead frame **200** has portions in the nature of nubs **500** which align with lands **418** of PCB **104** (see FIG. **4**; lands **418** are obscured by nubs **500** in FIG. **5**). An electrical connection is made between PCB **104** and substrate **102** at nubs **500** by soldering substrate **102** to PCB **104**. Contact points for nibs **500** for substrate **102** are shown points **122** in FIG. **1**A. In the embodiment, points **122** are internally connected via a track in PCB **104**. Lead frame **200** may be attached directly to PCB frame **400** using a PCB reflow process known in the art. Alternatively, the lead frame **200** and PCB frame **400** may be attached using a secondary attach process using a thermal bar or hand solder process.

It will be appreciated that when substrate **102** is soldered to PCB **104**, substrate **102** may lie generally flush against PCB **104**. Due to manufacturing tolerances, design requirements and other reasons, there may be an air gap between the upper surface of PCB **104** and the lower surface of substrate **102**. As assembled, heat produced by PCB **104** is conducted through substrate **102** and any components thereon. Accordingly, the surface area of substrate **102** and any components thereon is used to dissipate heat from PCB **104**. Air flow around the exposed surface of substrate **102**, either forced, convection or ambient, may assist in dissipation of heat from substrate **102**.

Frameworks **202** and **404** co-operate to facilitate the alignment of associated substrates **102** to PCBs **104**. Once aligned, substrates **102** and PCBs **104** may be physically and/or electrically connected together. If either or both of substrate **102** and PCB **104** are not populated with components, the lead frame **200** and PCB frame **400** may still be mounted to one another in the manner described above. In this way, frameworks **202** and **404** still facilitate alignment of the associated substrates **102** and PCBs **104** for mounting.

As noted earlier, whether or not substrate **102** and PCB **104** are populated with components, lead frame **200** and PCB frame **400** are mounted generally flush to one another. In an alternative embodiment, lead frame **200** may have a raised section to form a spaced region when mounted on PCB frame **400**, as described below and shown in FIGS. **9**A and **9**B.

Referring to FIG. **6**, the combined lead frame **200** and PCB frame **400** is shown with lead frame rails **204** and tabs **208** removed. Lead frame rails **204** and tabs **208** may be removed at this stage in the assembly of power converter **100** because substrate **102** and PCB **104** are attached. Also, at this stage in the assembly process, lead frame leads **108** are formed or bent for convenient connection to a power supply (not shown). In the embodiment, leads **108** are angled away from PCB **104** and are generally perpendicular to the plane thereof.

Once frame rails **204** are removed and power leads **108** are formed, PCB **104** is detached from PCB framework **404** either by cutting, breaking, or in some other manner separating it from PCB framework **404** without damaging power converter **100**. For example, PCB framework **404** may have small holes or perforations **600** defined therein to facilitate separation of PCB **104** from PCB framework **404**. Perforations **600** traverse tabs **407**, **409**, **411** and **412**, adjacent each PCB **104**, for removal of tabs **407**, **409**, **411** and **412**, and associated rails **406** and spanners **410**.

Referring to FIG. **7**, as an alternative, before detaching PCB **104** from PCB framework **404**, a second lead frame **700** is mounted to PCB framework **404** on a side thereof which is opposite to lead frame **200**. The addition of a second lead frame **700** permits further implementation of one or more of the features described above for lead frame **200** and its associated substrates **102**. For example, second lead frame **700** may be used to encourage further heat dissipation from PCB **104**, substrate **102** and associated components thereof. Second lead frame **700** may also be populated with components, such as FETs **702**, in a similar manner as described above for lead frame **200**.

Referring additionally to FIG. **8**, second lead frame **700** is excised and formed in a manner similar to that described for lead frame **200**. Once excising and forming is complete, additional components, such as cores and casings for transformer **112** and inductor **114**, are mounted to substrate **102** and PCB **104**. Power converters **100** are then detached from PCB frame **400** as described above for the embodiment having a single lead frame **200**. This results in the isolation of a completed power converter **100**, as shown in FIG. **1**A.

For illustrative purposes, FIG. **8** shows an isolated completed, but unpopulated substrate **102**, in exploded view from PCB **104**.

Referring to FIGS. **9**A and **9**B, an alternative power converter **900** is shown. Alternative power converter **900** differs from power converter **100** in that it has a modified substrate **901** mounted to a side of PCB **104**. Substrate **901** has an offset or raised section **902** that, when mounted to PCB **104**, is spaced from PCB **104**. Substrates **904**, **906** and **908** are similarly configured. Because substrates **901**, **904**, **906**, and **908** have similar configurations, only substrate **901** will be described. The description herein for substrate **901** generally applies to substrates **904**, **906**, and **908** as well.

Raised sections **902** can be post-formed either when lead frame **200** is initially stamped or at some stage in the manufacturing process thereafter. Following forming, which deforms substrates **102** into substrates **901**, substrates **901** are populated, processed and mounted to PCB frame **400** in a similar manner as described above for substrates **102**.

Raised section **902** presents two sides for mounting electronic components such as FETs **106**. This enables a greater number of components to be used in roughly the same footprint as occupied by power converter **100**. Additional components may also be added to PCB **104**. Raised sections **902** increase the exposed surface area of both substrate **901** and PCB **104**. This increased exposure may facilitate the transfer of heat from PCB **104**, substrate **901** and their associated components. In a manner similar to that used to create fins **118**, **216** and **217**, fins **910**, **912** and **914** may be created. Fins **910**, **912** and **914** encourage transfer of heat away from power converter **900**. Fins **910** and **912** may be bent to opposite sides of substrate **901** to facilitate air flow therebetween. In the embodiment illustrated, fins **910** and **912** alternate along an edge of raised section **902**.

As an alternative to raised section **902**, substrate **901** may instead be displaced from PCB **104** using risers (not shown) or some other means to produce a space between PCB **104** and the lower surface of substrate **102**, to allow placement of components to the underside of substrate **901**, and to enhance heat dissipation for power converter **900**.

Referring to FIG. **10**, alternative power converter **1000** is shown. Power converter **1000** is similar to power converter **100** except that it has interconnect pins **1001** attached instead of power leads **108**. As described above, while the use of power leads **108** can increase the current carrying capabilities of power converter **100**, if power requirements are such that less current is acceptable, then interconnect pins **1001** may be used instead of power leads **108**.

Referring to FIG. **11**, alternative power converter **1100** is shown. Power converter **1100** is generally similar to power converter **100**, but it differs in that the orientation of power leads **108** is rotated to form power leads **1101**. This configuration of power leads **1101** permits attachment to a power supply (not shown) having a different configuration than the power supply for power converter **100**.

Referring to FIG. **12**, power converter **900** is shown having an additional substrate **1200** provided therewith. Additional substrate **1200** is formed from a generally planar piece of a thermally conductive material, and has a different configuration than substrates **102** and **901**. Substrate **1200** is attached directly to or adjacent heat generating components such as FETs **106**, and functions as a heat sink to encourage transfer of thermal energy away therefrom. Substrate **1200** may be similarly added to any of the other power converters **100**, **900**, **1000**, and **1100** described above.

Any two or more of the associated components described above could be provided as a kit (not shown) for assembling a power converter (such as power converter **100**) or a part thereof. For example, lead frame **200** may be provided as a system in a kit with PCB frame **400** for subsequent manufacture into one of the power converters described above. The kit may also include any one or more of the associated components such as FETs **106**. Other combinations of frames, substrates and components may also be provided in a kit for later assembly. Partially completed assemblies could also be provided in kit form for later processing by a purchaser or assembler.

Those skilled in the art will appreciate that numerous modifications, adaptations and variations may be made to the embodiments without departing from the scope of the invention.

What is claimed is:

1. A circuit module comprising: an electrical component having at least one terminal; and a substrate formed from a stamping process, said substrate providing an exposed layer of electrically conductive material, wherein one terminal of said at least one terminal is attached to said exposed layer and said circuit module is attachable to a circuit board such that said substrate completes a part of an electrical circuit on said circuit board;

wherein said electrical circuit on said circuit board is a power conversion circuit and said substrate comprises a part of a winding associated with said power conversion circuit.

2. A circuit module as claimed in claim **1**, wherein said substrate has a first portion and a second portion located apart from said first portion; said one terminal is attached to said first portion; and a second terminal of said at least one terminal of said electrical component is attached to said second portion.

3. A circuit module as claimed in claim **2** wherein said second portion comprises a nib; said second terminal is attached to said nib of said second portion; and said nib is excisable from said second portion.

4. A circuit module as claimed in claim **1**, wherein said circuit module is attachable to said circuit board by a soldering process.

5. A circuit module as claimed in claim **4** wherein said substrate is adapted to transfer heat from said circuit board.

6. A circuit module as claimed in claim **5**, wherein said substrate further has at least one fin to transfer heat from said circuit board.

7. A circuit module as claimed in claim **5**, wherein said substrate further has a raised portion providing a space between said raised portion and said PCB when said substrate is attached to said PCB.

8. A circuit module as claimed in claim **1**, wherein said substrate further has a thickness enabling said substrate to carry an electrical current of at least 5 amperes.

9. An electronic module comprising: a circuit board; a substrate attached to a location on a surface of said circuit board; and an electrical component carried on said substrate, wherein said substrate is formed from a stamping process, is adapted to dissipate heat from said circuit board and completes a part of an electrical circuit on said circuit board;

wherein said electrical circuit is a power conversion circuit and said substrate comprises a part of a winding associated with said power conversion circuit.

10. An electronic module as claimed in claim **9**, wherein said substrate has a first portion and a second portion located apart from said first portion; a first terminal of said electrical component is attached to said first portion; and a second terminal of said electrical component is attached to said second portion.

11. An electronic module as claimed in claim **10**, wherein said electrical component is a transistor.

12. An electronic module as claimed in claim **11**, wherein said substrate further comprises at least one fin.

13. An electronic module as claimed in claim **12**, wherein said substrate is attachable to said circuit board by a soldering process.

* * * * *