GENESYS LOGIC

*Your Imagination, Our Creation*

# GL620USB-A

## GeneLink
## USB PC-to-PC Networking Controller

*SPECIFICATION 1.6*

Nov 17, 2000

**Genesys Logic, Inc.**
10F, No.11, Ln.3, Tsao Ti Wei, Shenkeng, Taipei, Taiwan
Tel: 886-2-2664-6655  Fax: 886-2-2664-5757
http://www.genesyslogic.com

**Microchip Ex. 1031, p. 1**
**Microchip v. Aptiv**
**IPR2024-00228**

# Index

1. Features ..... 3
2. Functional Overview ..... 4
3. Applications ..... 5
4. Functional Description ..... 6
5. Driver Support ..... 8
6. Pin Definitions and Descriptions ..... 10
7. Electrical Characteristics ..... 11
   *7.1 Absolute Maximum Ratings (Voltages referenced to GND) ..... 11*
   *7.2 DC Characteristics (VCP/D+/D-) ..... 11*
   *7.3 DC Characteristics (PIN1, 2) ..... 11*
   *7.4 DC Characteristics (PIN10, 11) ..... 12*
   *7.5 DC Characteristics (PIN14, 15) ..... 12*
   *7.6 Switching Characteristics ..... 12*
8. Package Diagram ..... 13
9. Application Circuit ..... 14



Microchip Ex. 1031, p. 2
Microchip v. Aptiv
IPR2024-00228

# 1. Features

- Conforms to USB 12Mbps Specification, Version 1.1
- Patented architecture
- Single chip solution for host-to-host communication
- Network driver (NDIS standard) support running on Windows 98 and Windows 2000
- Support TCP/IP, NetBEUI, IPX/SPX protocols
- Up to 8.6Mbps transfer rate
- Suitable for mobile and SOHO environment
- Tiniest solution in the market – 16-pin SOP
- On-chip 3.3V output
- 12MHz external clock
- Internal power-on reset
- Power management support



Microchip Ex. 1031, p. 3
Microchip v. Aptiv
IPR2024-00228

# 2. Functional Overview

The GL620USB-A provides a single-chip solution for networking two or more PCs via their USB ports. According to USB protocol, the PC is the host and the device is a slave, where the host initiates all the USB traffic and the slave responds to the host's requests. In other words, a host cannot talk to another host via USB protocol; instead, a host can only talk to one or more devices. The GL620USB-A's patent-pending architecture overcomes the USB inherently incompatibility of connecting two or more PCs by providing two independent USB transceivers and SIEs for each host, i.e., data can be transferred in both directions simultaneously.

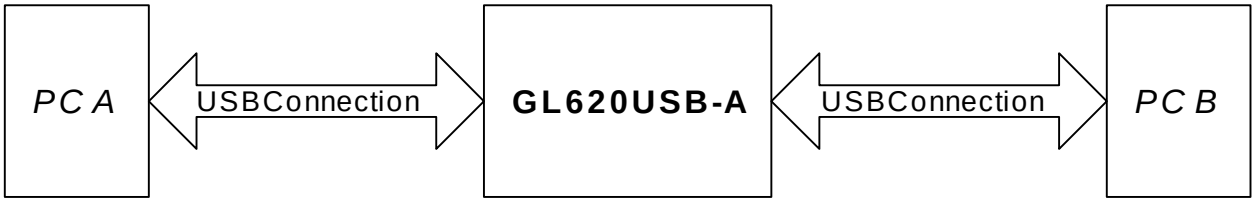


System Diagram



Microchip Ex. 1031, p. 4
Microchip v. Aptiv
IPR2024-00228

# 3. Applications

The windows network driver software comes with GL620USB-A can connect 2 or more PCs via USB ports easily. Genesys Logic also provides Macintosh driver software for GL620USB-A and supports the direct connection between two Macintosh machines. The plug-and-play nature of USB protocol makes the installation and usage of end products very simple.

Working with a full-featured windows driver, the GL620USB-A can perform the following functions between two or more PCs:

- File transfer
- Ethernet emulation
- Storage device sharing: hard drive, CD-ROM, floppy, …
- Printer sharing
- Internet sharing

Working with a full-featured Macintosh driver, the GL620USB-A can perform the following functions between two Macintosh machines:

- Ethernet emulation
- Storage device sharing: hard drive, CD-ROM, floppy, …
- Printer sharing

Working with GL620USB-A and its Windows/Macintosh drivers, PC can provide Internet sharing to Macintosh. GL620USB-A doesn' t support file transfer/sharing function between PC and Macintosh except that the extra third-party software is installed.

The GL620USB-A networking function can be integrated with the following form factors:

- USB standalone cable
- USB standalone hub
- USB monitor with hub
- PC host



Microchip Ex. 1031, p. 5
Microchip v. Aptiv
IPR2024-00228

# 4. Functional Description

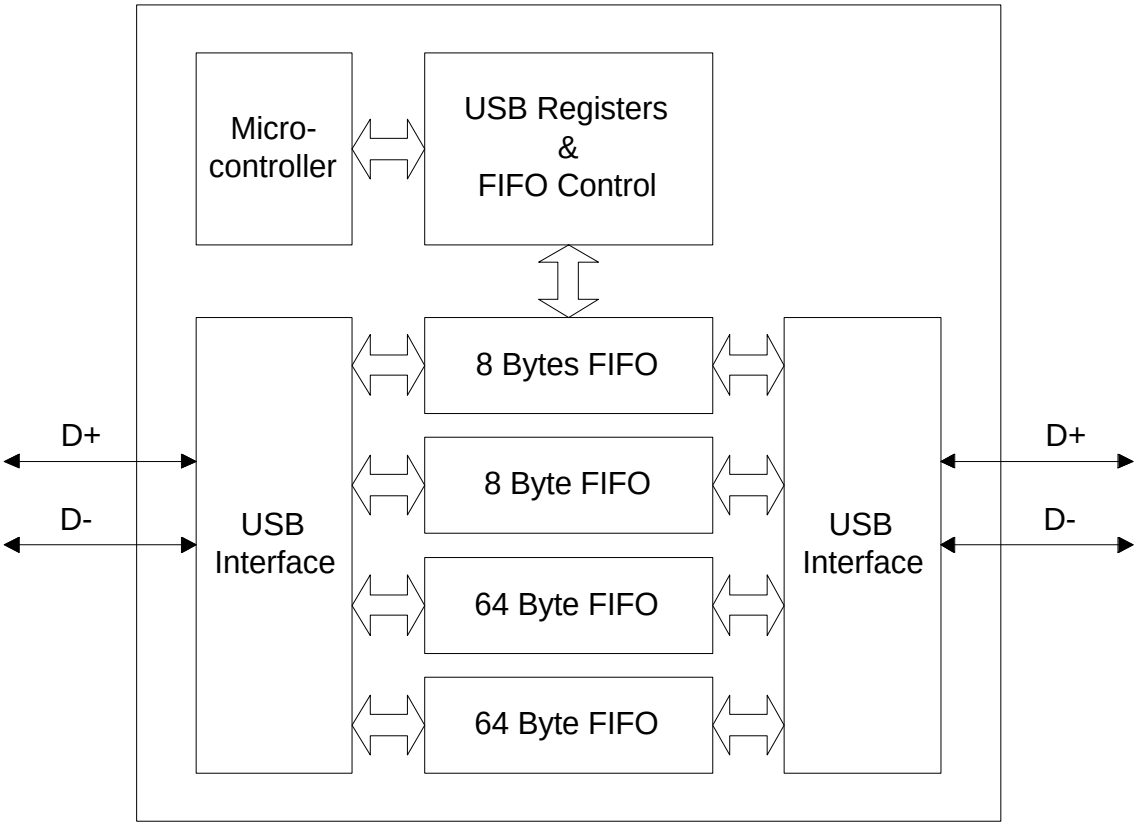


Block diagram of GL620USB-A

The GL620USB-A is equipped with two full-speed USB ports, and each port has four endpoints to provide different functions as follows:

Endpoint 0: control transfer
Endpoint 1: bulk-read transfer
Endpoint 2: bulk-write transfer
Endpoint 3: interrupt transfer

Two 8-bytes FIFO and four 64-bytes FIFO are built in the device as follows:

- Left 8-byte FIFO: provide a pipe to link left endpoint 0 and right endpoint 3. For example, if left host wants to communicate with right host, left host can issue a no data control transfer and the setup command will be



Microchip Ex. 1031, p. 6
Microchip v. Aptiv
IPR2024-00228

stored in the left 8-byte FIFO. Right host can request an interrupt transfer to get the setup command from left host. The status stage of the left side control transfer will not be terminated until the right side get the setup command via interrupt transfer.

- Right 8-byte FIFO: provide a pipe to link right endpoint 0 and left endpoint 3.
- Left 64-bytes DATA0/DATA1 FIFOs: provide a pipe to link left endpoint 2 and right endpoint 1. For example, if left host wants to transfer data to right host, left host can issue bulk write transfer and the payload will be stored in the left 64-byte FIFOs. Right host can request a bulk read transfer to get the data from left host.
- Right 64-bytes DATA0/DATA1 FIFOs: provide a pipe to link right endpoint 2 and left endpoint 1.



Microchip Ex. 1031, p. 7
Microchip v. Aptiv
IPR2024-00228

# 5. Driver Support

The Genesys Logic Ethernet Driver is a mini-port device driver emulating a network interface running on Windows 98 and Windows 2000. The Genesys Logic Ethernet Driver conforms to the NDIS (Network Driver Interface Specification) standard. The users can use standard Windows utilities such as Windows Explorer, Network Neighborhood and standard file sharing security features. Even though there's no Ethernet card present, the Genesys Logic Ethernet Driver performs all the functions an Ethernet card can do, and more, the plug-and-play feature. The users can build up their own private network by connecting several PCs via the GL620USB-A embedded cables.

The Genesys Logic software router is a network protocol layer driver. The software router can forward packet between the GL620USB-A embedded cable and Ethernet LAN to emulate all PCs on the network build by GL620USB-A is also on the Ethernet LAN. This function can share all resources on Ethernet LAN to GL620USB-A connected PCs.

The Genesys Logic Ethernet Macintosh Driver is a device driver emulating a network interface running on Mac OS 8.5, 8.6 and 9.0. After enable the standard Macintosh file sharing service, the users can share the device resources such as HD, CD-ROM between two Macintosh machines by the Macintosh Network Browser.



Microchip Ex. 1031, p. 8
Microchip v. Aptiv
IPR2024-00228

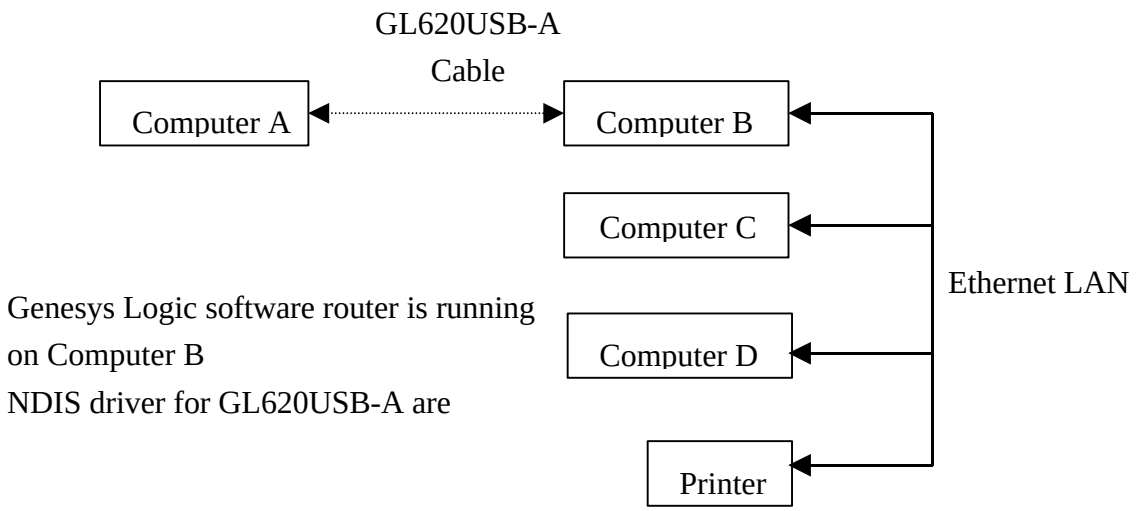


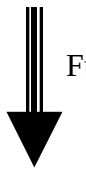


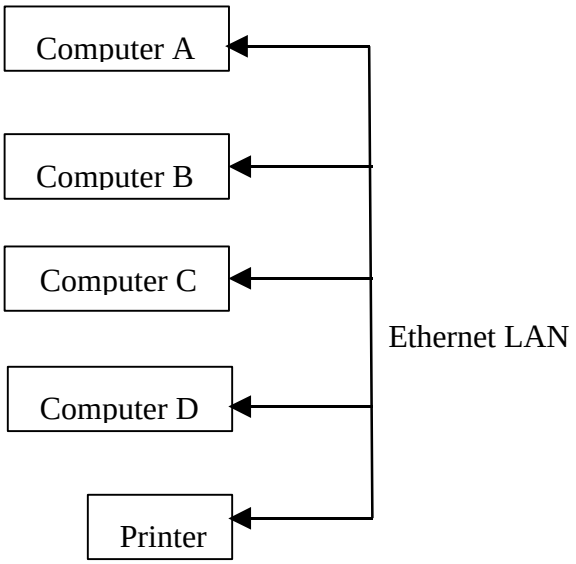




Microchip Ex. 1031, p. 9
Microchip v. Aptiv
IPR2024-00228

# 6. Pin Definitions and Descriptions

| PIN | SYMBOL | I/O | DESCRIPTION |
|---|---|---|---|
| 1 | GPIO1 | B | General purpose IO pin / Driving LED capability |
| 2 | GPIO2 | B | General purpose IO pin / Driving LED capability |
| 3 | LVM | B | Left D- |
| 4 | LVP | B | Left D+ |
| 5 | VCP | O | 3.3V output |
| 6 | RVP | B | Right D+ |
| 7 | RVM | B | Right D- |
| 8 | AGND | - | Ground |
| 9 | DGND | - | Ground |
| 10 | OSCSEL | I | Selection of clock type |
| 11 | EXTRST_ | I | External reset |
| 12 | XTAL1 | I | 12M crystal input |
| 13 | XTAL2 | O | Crystal output |
| 14 | GPIO3 | B | General purpose IO pin |
| 15 | GPIO4 | B | General purpose IO pin |
| 16 | VCC | - | 5V power |

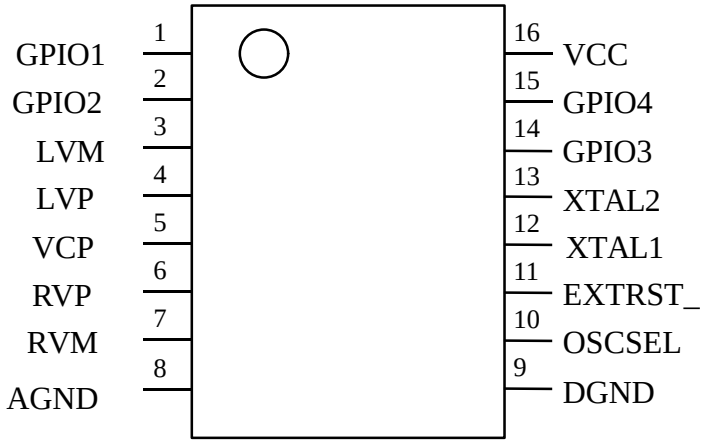


16-pin SOP



Microchip Ex. 1031, p. 10
Microchip v. Aptiv
IPR2024-00228

# 7. Electrical Characteristics

## 7.1 Absolute Maximum Ratings (Voltages referenced to GND)

| SYMBOL | Description | MIN | MAX |
|---|---|---|---|
| VCC | DC supply voltage | -0.5V | +7V |
| $V_I$ | DC input voltage | -0.5V | VCC+0.5V |
| $V_{I/O}$ | DC input voltage range for bidirect pins | -0.5V | VCC+0.5V |
| $V_{AI/O}$ | DC input voltage for USB D+/D- pins(PIN3, 4, 6, 7) | -0.5V | VCC+0.5V |
| $V_{I/OZ}$ | DC voltage applied to outputs in High Z state | -0.5V | VCC+0.5V |
| $V_{ESD}$ | static discharge voltage | 4000V | |

## 7.2 DC Characteristics (VCP/D+/D-)

| SYMBOL | Description | MIN | TYP | MAX | UNIT |
|---|---|---|---|---|---|
| $V_{3.3}$ | VCP regulator output | 3.0 | 3.3 | 3.6 | V |
| $I_{3.3}$ | VCP maximum supply current | 27 | 41 | 56 | mA |
| $V_{OL}$ | D+/D- static output LOW($R_L$ of 1.5K to 3.6V ) | | | 0.3 | V |
| $V_{OH}$ | D+/D- static output HIGH ($R_L$ of 15K to GND ) | 2.8 | | 3.6 | V |
| $V_{DI}$ | Differential input sensitivity | 0.2 | | | V |
| $V_{CM}$ | Differential common mode range | 0.8 | | 2.5 | V |
| $V_{SE}$ | Single-ended receiver threshold | 0.2 | | | V |
| $C_{IN}$ | Transceiver capacitance | | | 20 | pF |
| $I_{LO}$ | Hi-Z state data line leakage | -10 | | +10 | µA |
| $Z_{DRV}$ | Driver output resistance | 28 | | 43 | Ohms |

## 7.3 DC Characteristics (PIN1, 2)

| SYMBOL | Description | MIN | TYP | MAX | UNIT |
|---|---|---|---|---|---|
| $V_{DD}$ | Power Supply Voltage | 4.5 | 5.0 | 5.5 | V |
| $I_{OL}$ | DC output sink current at 0.4V | 13.01 | 19.54 | 24.82 | mA |
| $I_{OH}$ | DC output source current at $V_{DD}$ -0.4V | 6.35 | 9.82 | 12.37 | mA |
| $I_{OHTTL}$ | DC output source current at TTL high | 24.62 | 49.45 | 69.12 | mA |
| $V_{IL}$ | LOW level input voltage | | | 0.7 | V |
| $V_{IH}$ | HIGH level input voltage | 2.66 | | | V |
| $V_{TLH}$ | LOW to HIGH threshold voltage | 2.02 | 2.38 | 2.66 | V |
| $V_{THL}$ | HIGH to LOW threshold voltage | 0.7 | 0.83 | 1.0 | V |
| $V_{HYS}$ | Hysteresis voltage | 1.1 | 1.55 | 1.79 | V |
| $V_{OL}$ | LOW level output voltage when $I_{OL}$=16mA | | | 0.4 | V |



Microchip Ex. 1031, p. 11
Microchip v. Aptiv
IPR2024-00228

## 7.4 DC Characteristics (PIN10, 11)

| SYMBOL | Description | MIN | TYP | MAX | UNIT |
|---|---|---|---|---|---|
| $V_{DD}$ | Power Supply Voltage | 4.5 | 5.0 | 5.5 | V |
| $V_{IL}$ | LOW level input voltage | | | 0.69 | V |
| $V_{IH}$ | HIGH level input voltage | 2.65 | | | V |
| $V_{TLH}$ | LOW to HIGH threshold voltage | 2.01 | 2.37 | 2.65 | V |
| $V_{THL}$ | HIGH to LOW threshold voltage | 0.69 | 0.82 | 0.99 | V |
| $V_{HYS}$ | Hysteresis voltage | 1.1 | 1.55 | 1.79 | V |
| $R_{UP}$ | Pad internal pullup resister | 191.27 | 240.69 | 376.34 | Kohms |

## 7.5 DC Characteristics (PIN14, 15)

| SYMBOL | Description | MIN | TYP | MAX | UNIT |
|---|---|---|---|---|---|
| $V_{DD}$ | Power Supply Voltage | 4.5 | 5.0 | 5.5 | V |
| $I_{OL}$ | DC output sink current at 0.4V | 3.89 | 5.94 | 7.56 | mA |
| $I_{OH}$ | DC output source current at $V_{DD}$ -0.4V | 2.85 | 4.36 | 5.46 | mA |
| $I_{OHTTL}$ | DC output source current at TTL high | 10.9 | 21.5 | 29.75 | mA |
| $V_{IL}$ | LOW level input voltage | | | 0.71 | V |
| $V_{IH}$ | HIGH level input voltage | 2.68 | | | V |
| $V_{TLH}$ | LOW to HIGH threshold voltage | 2.03 | 2.39 | 2.68 | V |
| $V_{THL}$ | HIGH to LOW threshold voltage | 0.71 | 0.83 | 1.0 | V |
| $V_{HYS}$ | Hysteresis voltage | 1.1 | 1.55 | 1.8 | V |
| $V_{OL}$ | LOW level output voltage when $I_{OL}$=4mA | | | 0.4 | V |
| $R_{DN}$ | Pad internal pulldown resister | 122.08 | 160 | 267.31 | Kohms |

## 7.6 Switching Characteristics

| SYMBOL | Description | MIN | TYP | MAX | UNIT |
|---|---|---|---|---|---|
| $F_{X1}$ | X1 crystal frequency | 11.97 | 12 | 12.03 | MHz |
| $T_{CYC}$ | X1 cycle time | | 83.3 | | ns |
| $T_{X1L}$ | X1 clock LOW time | $0.45T_{cyc}$ | | | ns |
| $T_{X1H}$ | X1 clock HIGH time | $0.45T_{cyc}$ | | | ns |
| $T_{r30pf}$ | Output pad rise time from 10% to 90% swing with 30pF loading | 6 | 8 | 12 | ns |
| $T_{f30pf}$ | Output pad fall time from 10% to 90% swing with 30pF loading | 5.3 | 7 | 10.4 | ns |
| $T_{r50pf}$ | Output pad rise time from 10% to 90% swing with50pF loading | 9.5 | 13 | 19 | ns |
| $T_{f50pf}$ | Output pad fall time from 10% to 90% swing with 50pF loading | 7.7 | 10 | 16 | ns |
| $T_{rUSB}$ | D+/D- rise time with 50pF loading | 4 | | 20 | ns |
| $T_{fUSB}$ | D+/D- fall time with 50pF loading | 4 | | 20 | ns |



Microchip Ex. 1031, p. 12
Microchip v. Aptiv
IPR2024-00228

# 8. Package Diagram

| Symbol | Dimension in mils | | | Dimension in mm | | |
|---|---|---|---|---|---|---|
| | Min | Nom | Max | Min | Nom | Max |
| A | --- | 58 | --- | --- | 1.473 | --- |
| A1 | 6 | --- | --- | 0.152 | --- | --- |
| A2 | --- | 24 | --- | --- | 0.610 | --- |
| B | --- | 16 | --- | --- | 0.406 | --- |
| C | --- | 8 | --- | --- | 0.203 | --- |
| D | 388 | 390 | 392 | 9.855 | 9.906 | 9.957 |
| E1 | 152 | 154 | 156 | 3.861 | 3.912 | 3.962 |
| e | --- | 50 | --- | --- | 1.270 | --- |
| eB | --- | 238 | --- | --- | 6.045 | --- |
| L | 25 | --- | --- | 0.635 | --- | --- |
| θ | 0° | 3° | 6° | 0° | 3° | 6° |

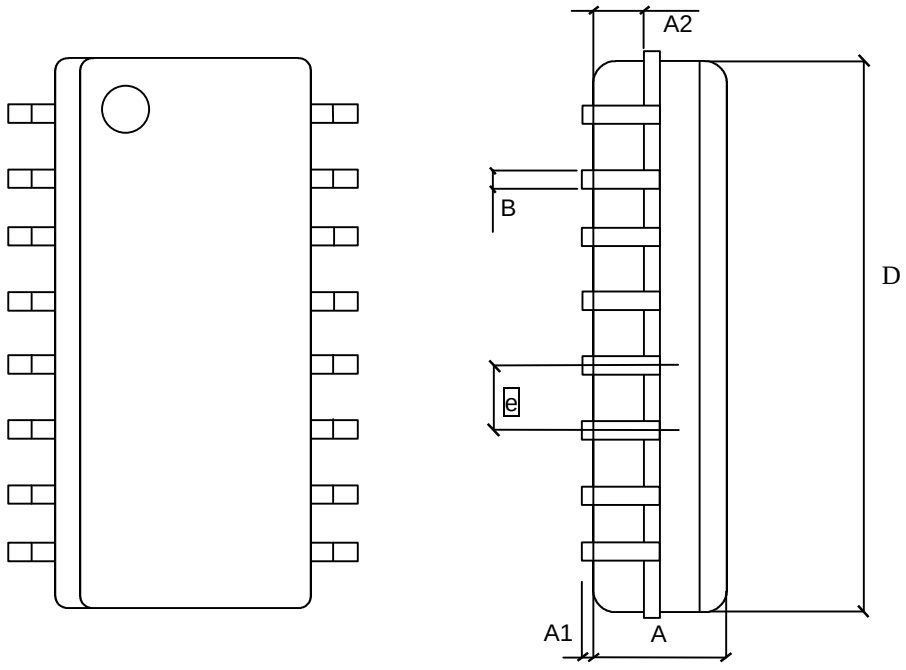


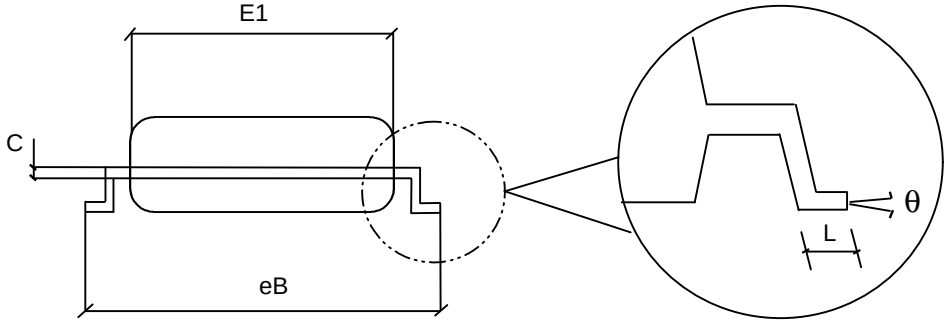




Microchip Ex. 1031, p. 13
Microchip v. Aptiv
IPR2024-00228

# 9. Application Circuit

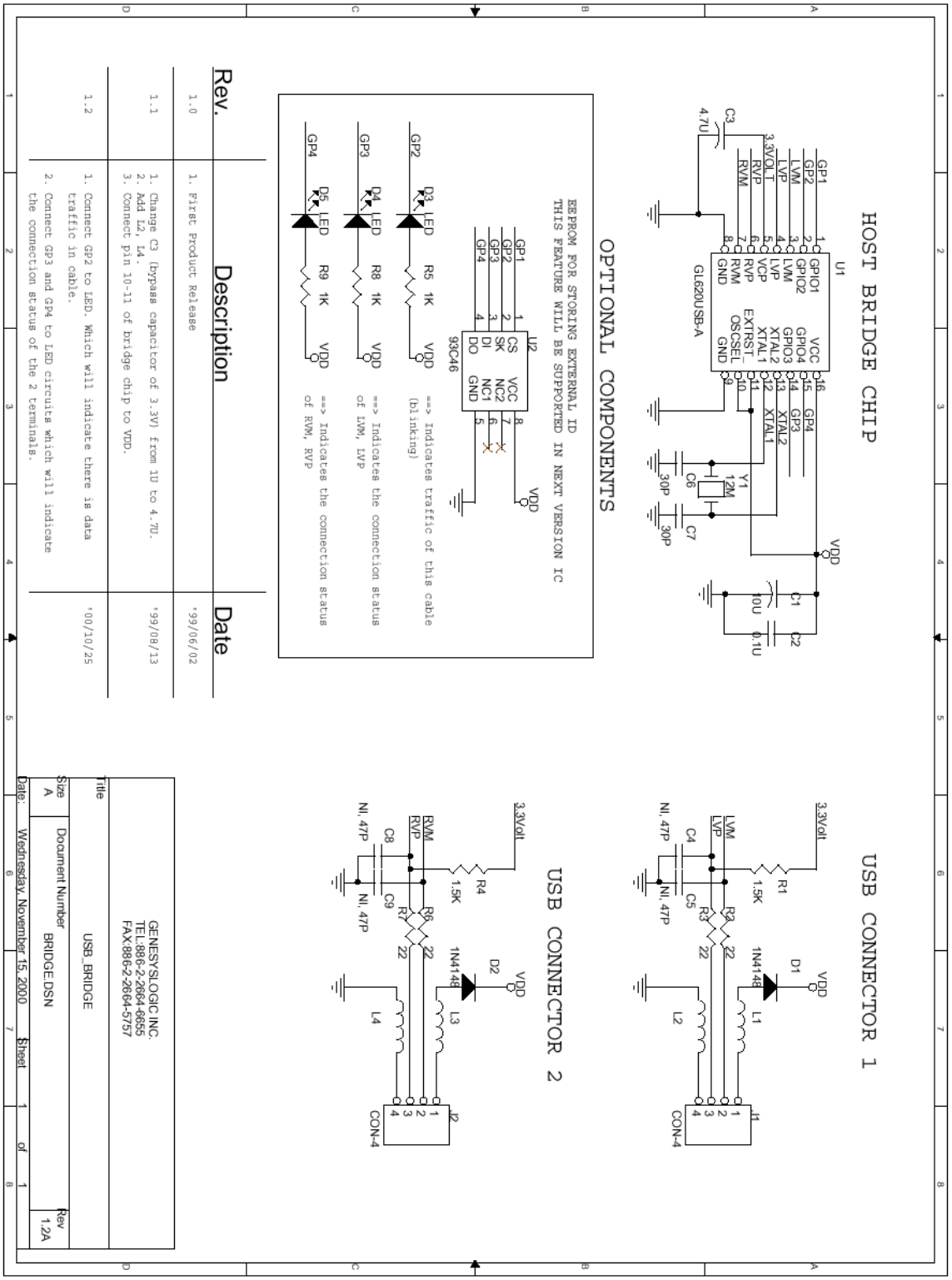




Microchip Ex. 1031, p. 14
Microchip v. Aptiv
IPR2024-00228