FAIRCHILD SEMICONDUCTOR®

November 2011

FSA880 / FSA881 – USB Port 2:1 Switch with Accessory and Charger Detection

Features

Switch Type	2:1 USB
Switch Mechanism	Automatic switching with Available Interrupt
Accessory Detection	USB Data Cable Chargers (CDP, DCP, Travel Adapter, Car Kit-CEA-936-A) Factory-Mode Cables
USB	FS and HS 2.0 Compliant
USB Charging	Battery Charging 1.1 Compliant Charger Detect, DCD, OVT (28V)
UART	RxD and TxD
VBAT	3.0 to 4.4V
Programmability	I^2C
ESD	15kV IEC 61000-4-2 Air Gap
Operating Temperature	-40°C to 85°C
Package	16-Lead UMLP 1.8x2.6x0.55mm, 0.4mm Pitch
JIG Option	FSA880 – Active LOW FSA881 – Active HIGH
Ordering Information	FSA880UMX FSA881UMX

Description

The FSA88x is a high-performance switch featuring automatic switching and accessory detection for a USB port. The FSA88x allows sharing of a common USB port to pass USB data, as well as factory programmability. In addition, the FSA88x integrates accessory detection of devices such as USB chargers and factory data cables. The FSA88x can be programmed for manual switching or automatic switching of data paths. VBUS_IN has 28V over-voltage tolerance.

The difference between the FSA880 and the FSA881 is that FSA880 JIG output is an open-drain, active-LOW output, while FSA881 JIG is an active-HIGH, CMOS output.

Applications

- Cellular Phones, Smart Phones
- MP3 and PMP

Related Resources

- *For samples and questions, please contact: Analog.Switch@fairchildsemi.com.*
- FSA880 / FSA881 Demonstration Board

Typical Application

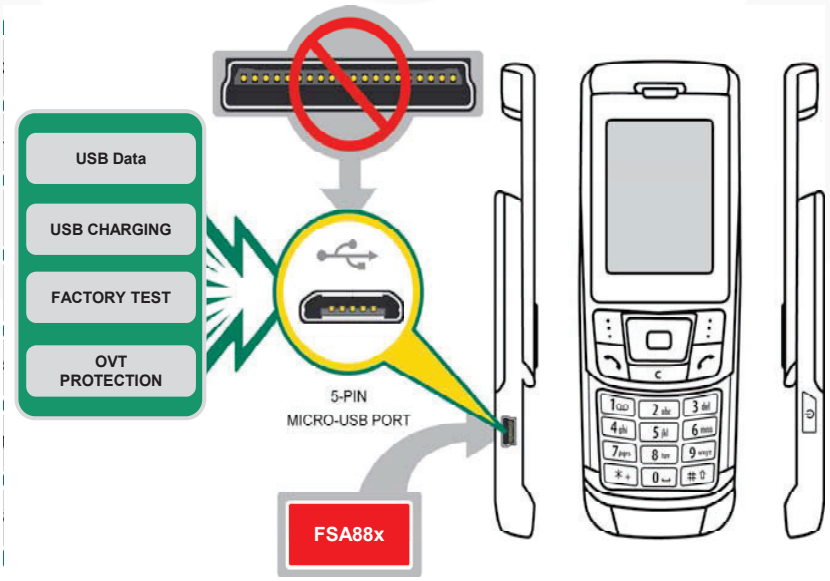

Figure 1. Mobile Phone Example

© 2010 Fairchild Semiconductor Corporation

Microchip Ex. 1071, p. 1
Microchip v. Aptiv
IPR2024-00228

Block Diagram

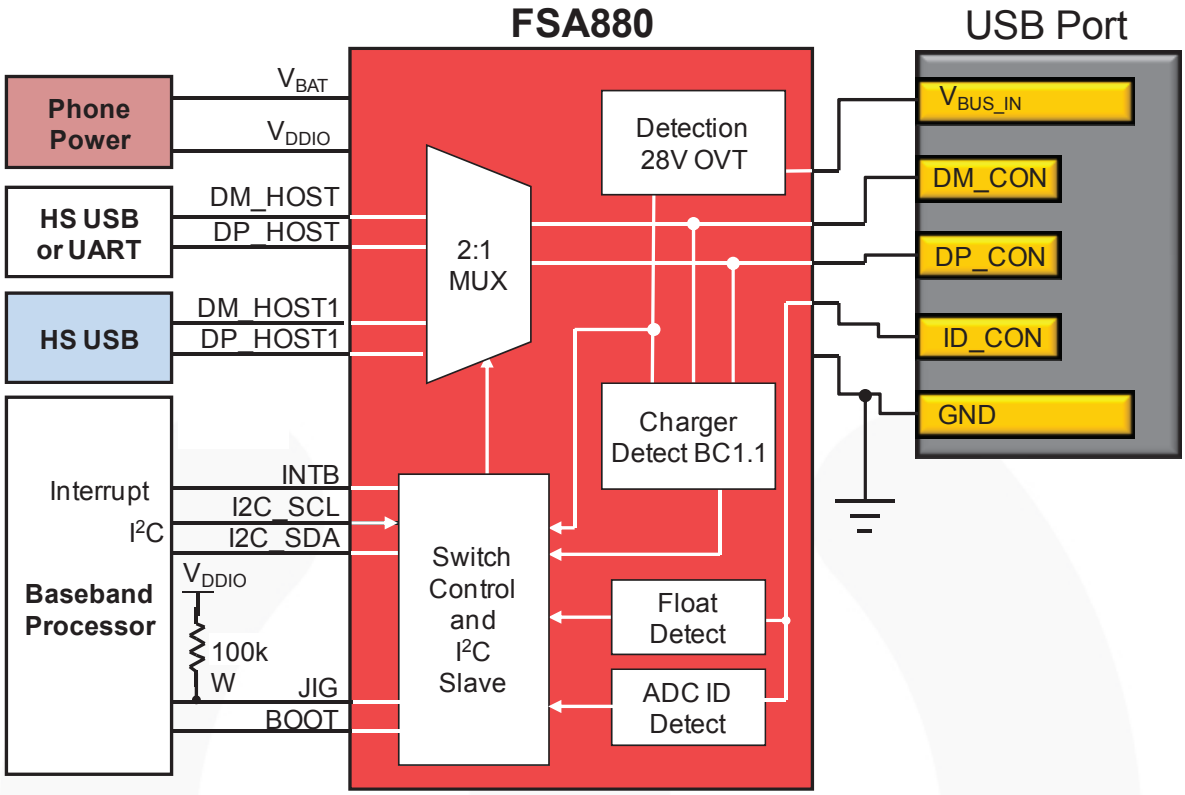

Figure 2. Block Diagram

Pin Configuration

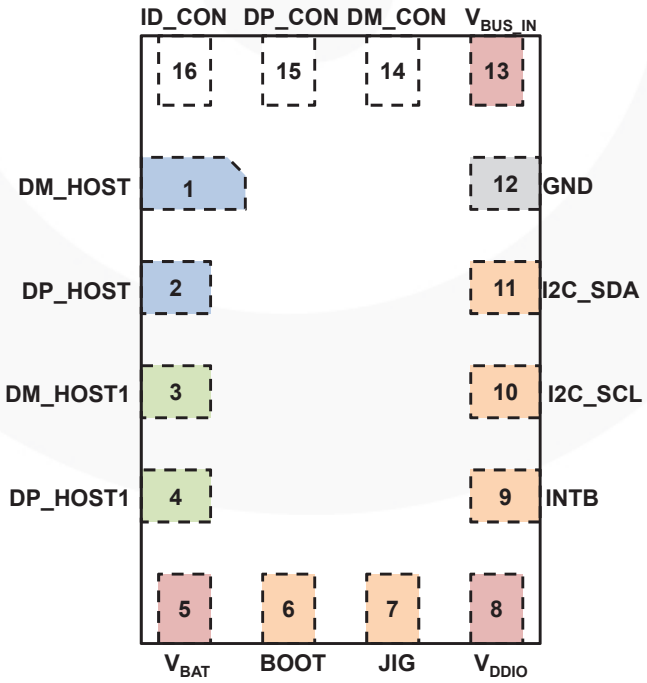

Figure 3. Pin Assignment (Through View)

Microchip Ex. 1071, p. 2
Microchip v. Aptiv
IPR2024-00228

Physical Dimensions

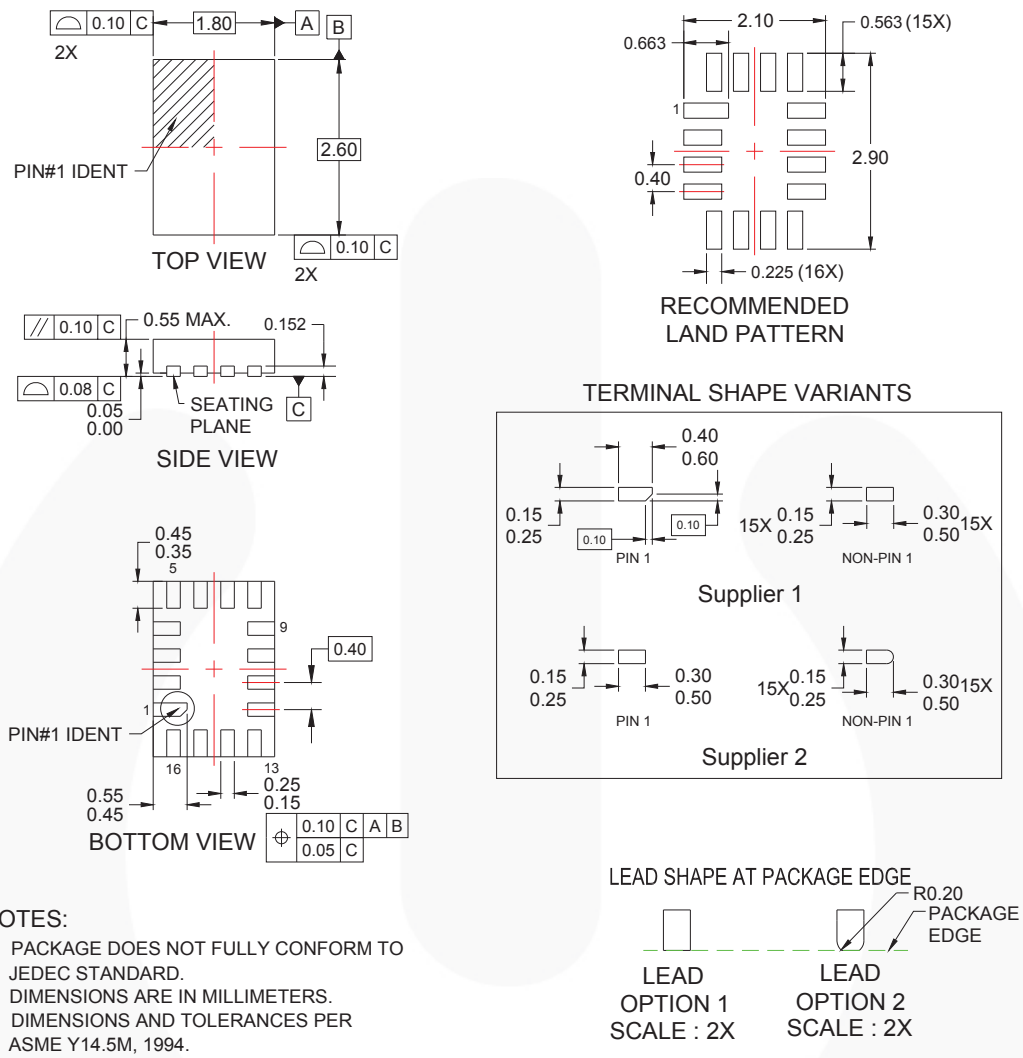

NOTES:

A. PACKAGE DOES NOT FULLY CONFORM TO JEDEC STANDARD.
B. DIMENSIONS ARE IN MILLIMETERS.
C. DIMENSIONS AND TOLERANCES PER ASME Y14.5M, 1994.
D. LAND PATTERN RECOMMENDATION IS BASED ON FSC DESIGN ONLY.
E. DRAWING FILENAME: MKT-UMLP16Arev4.
F. TERMINAL SHAPE MAY VARY ACCORDING TO PACKAGE SUPPLIER, SEE TERMINAL SHAPE VARIANTS.

Figure 24. 16-Lead Ultrathin Molded Leadless Package (UMLP), 1.8mm x 2.6mm x 0.55mm, 0.4mm Pitch

Package drawings are provided as a service to customers considering Fairchild components. Drawings may change in any manner without notice. Please note the revision and/or date on the drawing and contact a Fairchild Semiconductor representative to verify or obtain the most recent revision. Package specifications do not expand the terms of Fairchild's worldwide terms and conditions, specifically the warranty therein, which covers Fairchild products.

Always visit Fairchild Semiconductor's online packaging area for the most recent package drawings: http://www.fairchildsemi.com/packaging/.

Part Number	Operating Temperature Range	Top Mark	Package
FSA880UMX	-40 to +85°C	KU	16-Lead, Ultrathin Molded Leadless Package (UMLP), 1.8mm x 2.6mm x 0.55mm, 0.4mm Pitch
FSA881UMX	-40 to +85°C	KX	16-Lead, Ultrathin Molded Leadless Package (UMLP), 1.8mm x 2.6mm x 0.55mm, 0.4mm Pitch

Microchip Ex. 1071, p. 3
Microchip v. Aptiv
IPR2024-00228

FAIRCHILD SEMICONDUCTOR®

TRADEMARKS

The following includes registered and unregistered trademarks and service marks, owned by Fairchild Semiconductor and/or its global subsidiaries, and is not intended to be an exhaustive list of all such trademarks.

2Cool™
AccuPower™
Auto-SPM™
AX-CAP™*
BitSiC™
Build it Now™
CorePLUS™
CorePOWER™
CROSSVOLT™
CTL™
Current Transfer Logic™
DEUXPEED®
Dual Cool™
EcoSPARK®
EfficientMax™
ESBC™
Fairchild®
Fairchild Semiconductor®
FACT Quiet Series™
FACT®
FAST®
FastvCore™
FETBench™
FlashWriter®*
FPS™
F-PFS™
FRFET®
Global Power Resource℠
GreenBridge™
Green FPS™
Green FPS™ e-Series™
Gmax™
GTO™
IntelliMAX™
ISOPLANAR™
Making Small Speakers Sound Louder and Better™
MegaBuck™
MICROCOUPLER™
MicroFET™
MicroPak™
MicroPak2™
MillerDrive™
MotionMax™
Motion-SPM™
mWSaver™
OptoHiT™
OPTOLOGIC®
OPTOPLANAR®
PowerTrench®
PowerXS™
Programmable Active Droop™
QFET®
QS™
Quiet Series™
RapidConfigure™
Saving our world, 1mW/W/kW at a time™
SignalWise™
SmartMax™
SMART START™
Solutions for Your Success™
SPM®
STEALTH™
SuperFET®
SuperSOT™-3
SuperSOT™-6
SuperSOT™-8
SupreMOS®
SyncFET™
Sync-Lock™
SYSTEM GENERAL®*
The Power Franchise®
the power franchise
TinyBoost™
TinyBuck™
TinyCalc™
TinyLogic®
TINYOPTO™
TinyPower™
TinyPWM™
TinyWire™
TranSiC™
TriFault Detect™
TRUECURRENT®*
µSerDes™
UHC®
Ultra FRFET™
UniFET™
VCX™
VisualMax™
VoltagePlus™
XS™

* Trademarks of System General Corporation, used under license by Fairchild Semiconductor.

DISCLAIMER

FAIRCHILD SEMICONDUCTOR RESERVES THE RIGHT TO MAKE CHANGES WITHOUT FURTHER NOTICE TO ANY PRODUCTS HEREIN TO IMPROVE RELIABILITY, FUNCTION, OR DESIGN. FAIRCHILD DOES NOT ASSUME ANY LIABILITY ARISING OUT OF THE APPLICATION OR USE OF ANY PRODUCT OR CIRCUIT DESCRIBED HEREIN; NEITHER DOES IT CONVEY ANY LICENSE UNDER ITS PATENT RIGHTS, NOR THE RIGHTS OF OTHERS. THESE SPECIFICATIONS DO NOT EXPAND THE TERMS OF FAIRCHILD'S WORLDWIDE TERMS AND CONDITIONS, SPECIFICALLY THE WARRANTY THEREIN, WHICH COVERS THESE PRODUCTS.

LIFE SUPPORT POLICY

FAIRCHILD'S PRODUCTS ARE NOT AUTHORIZED FOR USE AS CRITICAL COMPONENTS IN LIFE SUPPORT DEVICES OR SYSTEMS WITHOUT THE EXPRESS WRITTEN APPROVAL OF FAIRCHILD SEMICONDUCTOR CORPORATION.

As used herein:

1. Life support devices or systems are devices or systems which, (a) are intended for surgical implant into the body or (b) support or sustain life, and (c) whose failure to perform when properly used in accordance with instructions for use provided in the labeling, can be reasonably expected to result in a significant injury of the user.
2. A critical component in any component of a life support, device, or system whose failure to perform can be reasonably expected to cause the failure of the life support device or system, or to affect its safety or effectiveness.

ANTI-COUNTERFEITING POLICY

Fairchild Semiconductor Corporation's Anti-Counterfeiting Policy. Fairchild's Anti-Counterfeiting Policy is also stated on our external website, www.fairchildsemi.com, under Sales Support.

Counterfeiting of semiconductor parts is a growing problem in the industry. All manufacturers of semiconductor products are experiencing counterfeiting of their parts. Customers who inadvertently purchase counterfeit parts experience many problems such as loss of brand reputation, substandard performance, failed applications, and increased cost of production and manufacturing delays. Fairchild is taking strong measures to protect ourselves and our customers from the proliferation of counterfeit parts. Fairchild strongly encourages customers to purchase Fairchild parts either directly from Fairchild or from Authorized Fairchild Distributors who are listed by country on our web page cited above. Products customers buy either from Fairchild directly or from Authorized Fairchild Distributors are genuine parts, have full traceability, meet Fairchild's quality standards for handling and storage and provide access to Fairchild's full range of up-to-date technical and product information. Fairchild and our Authorized Distributors will stand behind all warranties and will appropriately address any warranty issues that may arise. Fairchild will not provide any warranty coverage or other assistance for parts bought from Unauthorized Sources. Fairchild is committed to combat this global problem and encourage our customers to do their part in stopping this practice by buying direct or from authorized distributors.

PRODUCT STATUS DEFINITIONS

Definition of Terms

Datasheet Identification	Product Status	Definition
Advance Information	Formative / In Design	Datasheet contains the design specifications for product development. Specifications may change in any manner without notice.
Preliminary	First Production	Datasheet contains preliminary data; supplementary data will be published at a later date. Fairchild Semiconductor reserves the right to make changes at any time without notice to improve design.
No Identification Needed	Full Production	Datasheet contains final specifications. Fairchild Semiconductor reserves the right to make changes at any time without notice to improve the design.
Obsolete	Not In Production	Datasheet contains specifications on a product that is discontinued by Fairchild Semiconductor. The datasheet is for reference information only.

Rev. I60

© 2010 Fairchild Semiconductor Corporation

Microchip Ex. 1071, p. 4
Microchip v. Aptiv
IPR2024-00228