UNITED STATES PATENT AND TRADEMARK OFFICE

BEFORE THE PATENT TRIAL AND APPEAL BOARD

MICROCHIP TECHNOLOGY INC.,
Petitioner,
v.

APTIV TECHNOLOGIES AG,
Patent Owner.

Patent No. 9,619,420

Inter Partes Review No. IPR2024-00228

DECLARATION OF HENRY HOUH

I. INTRODUCTION

1. I have been retained by counsel for Aptiv Technologies AG ("Aptiv" or "Patent Owner") in the following matters to which this declaration relates:

Case No. IPR2024-00228 (Patent No. 9,619,420)
Case No. IPR2024-00029 (Patent No. 9,645,962)
Case No. IPR2024-000230 (Patent No. 11,176,072)
Case No. PGR2024-00011 (Patent No. 11,681,643)

I have been asked to opine on the patentability of the challenged claims in U.S. Patent Nos. 9,619,420 (the "'420 Patent"), 9,645,962 (the "'962 Patent"), 11,176,072 (the "'072 Patent), 11,681,643 ("'643 Patent") (collectively the "Challenged Patents").

II. QUALIFICATIONS

2. I am currently employed by Houh Consulting Inc. as an independent technical consultant. I also founded Einstein's Workshop, a company that provides supplemental science, technology, engineering, and mathematics ("STEM") education to children of all ages.

3. My professional career has spanned more than 25 years. As set forth in my curriculum vitae, a copy of which is submitted as Exhibit A, during these years I have gained extensive experience in communications systems, networking, distributed systems, protocols, and embedded systems.

4. I earned my Ph.D. degree in Electrical Engineering and Computer Science in February 1998 from the Massachusetts Institute of Technology (MIT). I also received a Master of Science (M.S.) in Electrical Engineering and Computer Science (February 1991), a Bachelor of Science in Electrical Engineering and Computer Science (June 1989) and a Bachelor of Science in Physics (February 1990) from MIT.

5. In 1987, I worked at AT&T Bell Laboratories as part of a five-year dual degree program at MIT. At Bell Labs, I first worked in a group supporting core telephony switching functions, then later I joined the Optical Computing group. In graduate school, I joined the Advanced Network Architecture (ANA) group at the Laboratory for Computer Science (LCS) at MIT, then headed by Prof. David Tennenhouse and senior research scientist David Clark. Dr. Clark is generally considered to be one of the fathers of the Internet Protocol, having acted as chief protocol architect for the development of the Internet. My research and work experience in distributed systems, networking, and network architecture dates back to around 1991 when I joined ANA.

6. Later, when Prof. Tennenhouse formed his own research group, the Telemedia Network Systems (TNS) group, I joined TNS. The TNS group built a high-speed gigabit network and applications which ran over the network, such as

remote video capture, processing, and display on computer terminals. I designed the core networking hardware and software, including the high-speed data links and the device drivers for the network interface cards.

7. TNS's research activities focused on high speed networking and the types of applications that require increased network bandwidth and computing power. One of the applications I investigated was live streaming video, and real-time processing of such video. My work was focused around the transport, switching, and routing of data (including video and audio streams), and the integration of TNS's network into the computing environment, including the protocols, IP/ATM integration, operating system software and device drivers.

8. While I was an undergraduate senior, I became a teaching assistant (normally a role at MIT reserved for graduate students) for a core electrical engineering/computer science course, Computation Structures. Later, as a graduate student, I became head teaching assistant for the course. After graduating, I was invited to guest lecture and work with several MIT courses, including in circuit design and web application development. I also worked with a team of students mentoring them on their web application development project.

9. I defended and submitted my Ph.D. thesis, titled "Designing Networks for Tomorrow's Traffic," in January 1998. As part of my thesis research, I

analyzed local-area and wide-area flows to show a more efficient method for routing packets in a network, based on traffic patterns at the time. My thesis also addressed real-time streamed audio and video.

10. From 1997 to 1999, I was a Senior Scientist and Engineer at NBX Corporation, a start-up that made business telephone systems for streaming packetized audio over data networks instead of using traditional telephone lines. NBX was later acquired by 3Com Corporation, and the phone system I worked on at NBX was widely used by numerous businesses. As part of my work at NBX, I designed the core audio reconstruction algorithms for the telephones, as well as the packet transmission algorithms. I also designed and validated the core packet transport protocol used by the phone system. The NBX system also supported TAPI, the Telephony Application Programming Interface, thus allowing other computer programs to integrate with our system telephony features.

11. From 1999-2004, I was employed by Empirix or its predecessor company, Teradyne. Empirix was a leader in test tools for telecommunications protocols and systems, providing functional testing tools as well as load testing tools. From 2000-2001, I conceived and built a test platform for testing Voice-over-IP (VoIP). The first application on this new test platform was a cloud emulator for simulating the effects of transmitting VoIP over a busy network.

12. I worked at BBN Technologies from 2004 to 2009. BBN Technologies, formerly known as Bolt, Beranek and Newman, was a pioneer of the Internet and a long-established leader in speech recognition and natural language processing. BBN received the first contract to build components of a packet switched network as part of the ARPANET, a U.S. Department of Defense effort funded through the Advanced Projects Research Agency (ARPA). While this effort preceded my time at BBN by many years, BBN continued to maintain a strong presence in network research and development, including in wireless networking, device discovery, and protocols for a "body area network."

13. In 2012, I founded Einstein's Workshop, a science, technology, engineering, and math enrichment program for kids of all ages. The Workshop teaches programming, robotics, "making" (akin to creating, building, and tinkering), engineering, 3D CAD, mobile application development and many other subjects. Einstein's Workshop teaches a variety of programming classes from Scratch to Java. We also teach game development for mobile devices, for which I evaluated a number of mobile application programming environments. I also developed a robotics programming class in which robots could be programmed to be autonomous or under direct wireless control.

14. Einstein's Workshop also created and developed BlocksCAD, a 3D CAD system for kids and adults. BlocksCAD is used world-wide and has more than 110,000 registered users and 350,000 total users. BlocksCAD is being used in maker spaces worldwide and is integrated into school curriculum in various school systems in the U.S. at elementary, middle and high school levels. BlocksCAD was spun out into a separate company that was part of the LearnLaunch business accelerator program for educational technologies, MIT Playlabs 2018 and the 2018 MassChallenge Boston Cohort. BlocksCAD also received Phase 1 SBIR funding.

15. I have been awarded several United States patents, and I have several patent applications pending, including U.S. Patent No. 6,967,963, which originated in the work I did at NBX, and is titled "Telecommunication method for ensuring on-time delivery of packets containing time-sensitive data." A full list of my U.S. Patents, European Patents and Patent Publications is included in my attached C.V.

16. Additional details of my work experience, awards and honors, and publications that may be relevant to the opinions I am expressing are set forth in my C.V. attached as Exhibit A to the end of my declaration.

III. COMPENSATION

17. I am being compensated for my time at my standard consulting rate of $820/hr. I am also being reimbursed for expenses that I incur during my work. My

compensation does not depend on the substance of my opinions or the outcome of any proceeding involving the Challenged Patents. I have no financial interest in the outcome of this matter or in any litigation involving the Challenged Patents.

IV. MATERIALS CONSIDERED

18. I considered the following materials, amongst other things, in preparing this declaration.

Exhibit No.	Description
1001	U.S. Patent No. 9,460,037 ("'037 Patent")
1002	Patent Prosecution History for U.S. Patent No. 9,460,037
1003	U.S. Patent No. 9,619,420 ("'420 Patent")
1004	Patent Prosecution History for U.S. Patent No. 9,619,420
1005	U.S. Patent No. 9,645,962 ("'962 Patent")
1006	Patent Prosecution History for U.S. Patent No. 9,645,962
1007	U.S. Patent No. 10,545,899 ("'899 Patent")
1008	Patent Prosecution History for U.S. Patent No. 10,545,899
1009	U.S. Patent No. 11,176,072 ("'072 Patent")
1010	Patent Prosecution History for U.S. Patent No. 11,176,072
1011	U.S. Patent No. 11,681,643 ("'643 Patent")
1012	Patent Prosecution History for U.S. Patent No. 11,681,643
1013	Declaration of Eric Welch
1014	U.S. Patent Publication No. 2006/0206650 ("Chang")
1015	U.S. Patent Publication No. 2009/0268743 ("Chang II")
1016	U.S. Patent Publication No. 2004/0019732 ("Overtoom")
1017	U.S. Patent Publication No. 2006/0195625 ("Hesse")
1018	*Universal Serial Bus Specification,* Revision 2.0, April 27, 2000 ("USB 2.0 Specification")
1022	*On-The-Go and Embedded Host Supplement to the USB Revision 2.0 Specification,* Revision 2.0 version 1.1a, July 27, 2012 (the "OTG Supplement")
1029	U.S. Patent No. 8,447,598 ("Chutorash")
1064	Cypress Semiconductor AN96527 – Designing USB Type-C

	Products Using Cypress's CCG1 Controllers, dated June 3, 2015
2002	Trial Transcript Excerpts, *Microchip Tech. Inc. v. Aptiv Servs. US, LLC*, No. 17-cv-1194 (D. Del. Apr. 6-13, 2022) – Testimony of Mitch Obolsky
2003	Trial Transcript Excerpts, *Microchip Tech. Inc. v. Aptiv Servs. US, LLC*, No. 17-cv-1194 (D. Del. Apr. 6-13, 2022) – Testimony of Robert Voto
2004	Complaint, *Aptiv Technologies Ltd. v. Microchip Technology, Inc.*, No. 23-cv-307-JDW (DED).
2005	Trial Exhibit No. 58 – Jun. 18, 2014 Mark Orlosky and Brigham Steele Email Chain re: CarPlay and forced DCP to external ports
2006	Trial Exhibit No. 62 – Oct. 1, 2014 Stefan Saenger, Chris Behal, and Ray Kamps Email Chain re: CarPlay - Fiat
2007	Trial Exhibit No. 66 – Nov. 26-Dec. 1, 2014 David Sroka, Eric Kawamoto, and Sal Canu Email Chain re: Media Hub Interim Update
2008	Trial Exhibit No. 246 – Jul. 20, 2014 Don Perkins Email re: UNG Detroit Sales Meeting and Training July 15 – 18
2009	Trial Exhibit No. 252 – Aug. 11, 2014 David Sroka, Don Perkins, Sal Canu Email Chain re: CarPlay compliance Strategy
2010	Trial Exhibit No. 262 – Dec. 2, 2014 Sal Canu Email re: Microchip Position for the Thursday Chrysler Meeting
2011	Merriam Webster - https://www.merriam-webster.com/dictionary/includes
2012	U.S. Patent No. 7,282,965 ("Hatooka")
2013	U.S. Patent No. 5,838,875 ("Cho")
2014	U.S. Patent No. 6,441,627 ("Larson")
2015	Wiley Electrical and Electronics Engineering Dictionary (2004)
2016	Robert Dezmelyk Declaration in Support of Microchip's Responsive Claim Construction Brief, *Aptiv Technologies AG v. Microchip Technology Inc.*, No. 23-cv-307-JDW (DED)
2017	Trial Transcript Excerpts, *Microchip Tech. Inc. v. Aptiv Servs. US, LLC*, No. 17-cv-1194 (D. Del. Apr. 6-13, 2022) – Testimony of Michael Dreon

V. UNDERSTANDING OF THE LAW

19. I am not a lawyer, and I will not provide any legal opinions. Rather, I have been asked to provide my technical opinions based on (1) how a person of ordinary skill in the art would have understood various references before the priority dates of the Challenged Patents and (2) how a person of ordinary skill in the art would understand disputed claims in the ’643 Patent. Although I am not a lawyer, I have been advised to apply certain legal standards in forming my opinions.

a. Claim Construction

20. I have been informed that claims should be construed using the same standard as in district court. As such, claim terms generally receive their plain and ordinary meaning, *i.e.*, how a person of ordinary skill in the art would have understood the term at the time of the claimed invention.

b. Obviousness

21. I understand that a patent claim is unpatentable if it is obvious in view of the prior art. I further understand that obviousness must be considered from the perspective of a person of ordinary skill in the art at the time the claimed invention was made.

22. I have been informed that a patent claim is unpatentable if it would have been obvious to a person of ordinary skill in the art. In analyzing the

obviousness of a claim, I understand the following factors may be taken into account: (1) the scope and content of the prior art; (2) the differences between the prior art and the claims; (3) the level of ordinary skill in the art; and (4) any so called "secondary considerations" of non-obviousness if they are present.

23. I have been informed that, in considering obviousness, one must not use hindsight reasoning derived from the patent-at-issue. Rather, references can only be combined if there would have been a motivation to combine them at the time of the invention and a person of ordinary skill in the art would have had a reasonable expectation of success in the combination.

c. Written Description

24. I have been informed that the written description requirement of 35 U.S.C. § 112 is satisfied where the specification reasonably conveys to those skilled in the art that the inventor had possession of the claimed subject matter as of the filing date of the patent at issue. I understand that while this analysis requires an objective inquiry into the specification, it does not turn on the presence or absence of literal support in the specification for the claim language. Rather, the specification need only convey possession of the complete and final invention as claimed. I further understand that the level of detail required to satisfy this requirement necessarily depends on the relevant technology.

d. Indefiniteness

25. I understand that a patent's claims are indefinite only if the claims, read in light of the specification delineating the patent and the prosecution history, fail to inform, with reasonable certainty, those skilled in the art about the scope of the invention.

e. Level of Skill in the Art

26. In my opinion, a person of ordinary skill in the art in the field of the Challenged Patents, as of the date of invention (September 26, 2013) ("POSITA"), would have had a bachelor's degree in computer science, electrical engineering, or an equivalent, and two years of professional experience working with computer network protocols such as USB. Lack of work experience can be remedied by additional education, and vice versa.

27. My opinions regarding the level of ordinary skill in the art are based on, among other things, my industry experience hiring and managing technical personnel in the computer networking field, and my understanding of the basic qualifications that would be relevant to an individual tasked with investigating methods and systems in the relevant area, and my familiarity with the backgrounds of colleagues, both past and present.

28. My education and my level of experience in electrical engineering exceeds that necessary for a person of ordinary skill in the art. My opinions on the Challenged Patents and the asserted prior art are from the perspective of a POSITA.

VI. THE STATE OF THE ART

a. Universal Serial Bus

29. Based on my review of the Challenged Patents, the patented technology relates generally to a novel way of allowing devices to communicate using the Universal Serial Bus (USB) protocol.

30. USB is a common data networking and computing device connectivity standard designed to allow a variety of devices to connect and communicate with one another using a standardized communication and power interface. Prior to the introduction of USB in the mid-1990s, there were a wide array of different interfaces for connecting various peripheral devices to personal computers. USB was conceived of as a way to reduce the number of different ports and cables required by consumers.

31. The first USB specification (version 1.0) was released in January 1996. The USB 2.0 specification was released in April 2000, and the USB 3.0

specification was released in November 2008. The core principles of USB I discuss here have remained consistent across each of these specifications.

32. USB is a serial bus standard. In computing, the term "bus" is used to refer to systems for transferring data between computing components, whether inside of a computer or between a computer and external components. A "serial" bus is one in which data is sent along a single pathway, with one bit following another. This is in contrast with a "parallel" bus in which the bits comprising a single data transmission may be sent simultaneously along parallel communication lines.

33. In order to manage the data traffic on its serial bus, USB employs a strict, top-down topology. This means that the network has a single USB "host" which communicates with various USB "devices." The protocol requires that it is the host that must initiate all communication. While a USB host may request data from a USB device, USB Devices cannot initiate communication with the host and are limited to responding to a host's command. Because a host issues commands, it is not configured to receive them.

34. An example of a very simple USB system is provided below:

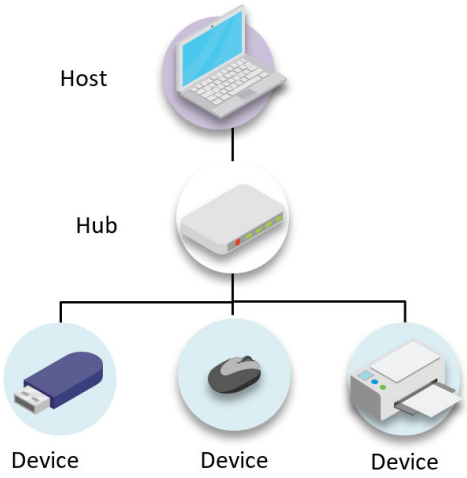

In this scenario, the computer serves as the USB host, while the thumb drive, mouse, and printer act as USB devices.

35. The direction of data flow in a USB network is described relative to the USB host. "Upstream" means the direction of data flow towards the host. "Downstream" means the direction of data flow away from the host. In our example, the PC would be described as upstream of the mouse and printer. Conversely, one could refer to the mouse and printer as downstream devices.

36. The components of a USB network connect via physical connection interfaces called ports. While these connections can be direct, it is common to employ an intermediate device called a hub. A hub is a device that routes multiple downstream ports to a single upstream port. Using a hub allows the host to have more downstream ports where devices can connect. Because multiple downstream ports are routed to a single upstream port, the hub also reduces the amount of

wiring required as compared to a USB network using only direct connections. In our example, a hub could be used to allow a PC with only two built-in USB ports to have many downstream ports. Thus, the PC could simultaneously connect to a mouse, keyboard, printer, web camera, etc.

b. Issues with Certain Implementations

37. USB is used in many applications, including the automotive sector. By the early 2010's, it was common for automotive companies to use USB for interfacing devices within a vehicle. Typically, the car's computer or "head unit" would be configured as a USB host. The head unit could then communicate with (1) non-removable parts of the vehicle, such as speakers, displays, or SD card readers (used for uploading maps) and (2) consumer devices, including memory sticks, tablets, and, of course, smart phones.

38. Smart phones changed the dynamics of USB communication. In traditional USB networks, a PC was commonly configured as a host with accessories acting as devices. But as smart phone technology advanced, smart phones became capable of acting as a USB host and supporting their own accessories. Thus, depending on the configuration, smart phones could act as either a USB device or a USB host.

39. Around 2013, Apple informed automakers of its plans to release a new technology known as CarPlay which was designed to create a seamless user experience in compatible vehicles. (EX-2003, 84:5-86:5.) Specifically, when an iPhone connected to a vehicle's infotainment system, the iPhone applications would be displayed on the infotainment system's screen. Apple provided automakers with the technical requirements to make their vehicles compatible, described in an Accessory Interface Specification. To ensure the requirements were met, Apple implemented a certification process wherein only approved systems would be allowed to implement CarPlay. (EX-2017, 199:21-200:8.)

40. Apple's specifications were not easy to implement. A particularly difficult constraint was that Apple required the iPhone to act as the USB host during CarPlay. This proved problematic as existing vehicle infotainment systems were designed for an embedded host in the head unit to serve as the USB host and to control a variety of USB devices, such as the screen, speakers, and any external storage components (e.g., SD cards, CD players, etc). As discussed above, the USB specification only contemplates a single host in any USB network. In fact, in a standard USB network, two hosts cannot communicate since they are only configured to give commands, not receive them. Thus, existing designs could not

implement CarPlay while also maintaining connectivity between the head unit and the vehicle's other USB devices such as speakers, displays, SD card readers, etc.

41. At the time of the invention, there were two imperfect approaches to implementing CarPlay (or other features requiring host-to-host communications in a USB system).

42. The first approach was to include a dedicated USB port for host-to-host communications. This solution was known as "dual lane" because the host-to-host communications and host-to-device communications were kept separate. But because the solution required dedicated host-to-host ports, it required consumers to connect their device to a different port depending on whether it was operating in host or device mode. Furthermore, the solution required additional wiring (compared to a hub-compatible network) and increased the cost and complexity of the USB system, something that most automakers were unwilling to accept.

43. The second approach was to effectively invert the USB communication network by swapping the existing host and device roles when a user connected a CarPlay-enabled iPhone. (EX-1003, 3:18-21.) For example, when CarPlay was initiated, the iPhone would become the host and the head unit would become a device. This role-swapping could be accomplished via specialized "On-the-Go" ("OTG") ports which allowed compatible devices to

negotiate a role reversal. (EX-1003, 3:21-24.) Similarly, Microchip's proprietary "FlexConnect" feature dynamically changed a physical port from an upstream port to a downstream port, allowing the connected devices to change roles. (EX-1003, 3:46-49.)

44. While role-reversal systems allowed the smart phone to act as a host, they contained a fundamental flaw. By inverting the topology of the USB network, the head-unit was forced to act as a device, not a host. (EX-1003, 3:56-60.) As such, it could no longer support connections with the other downstream devices in the vehicle while CarPlay was in use. As a practical matter, this meant activating CarPlay might disrupt built-in functionality like navigation and audio playback. (EX-1003, 3:60-3:64.) Thus, OTG and FlexConnect could not facilitate both host-to-host communication (e.g., CarPlay) and persistent downstream USB throughout the vehicle. (EX-1003, 3:56-60.)

VII. THE CLAIMED INVENTIONS

45. In response to Apple's requirement that the iPhone act as a USB host during the use of CarPlay, Aptiv created an innovative solution that would allow both the iPhone and the head unit to act as a USB host. At its most basic, this involved the use of a "bridge" structure that would allow two separate hosts to send data back and forth. The car's head unit would then receive firmware that

would allow its embedded host to respond to requests from and send data to the iPhone host.

46. The Challenged Patents claim systems, devices, and methods for providing host-to-host and host-to-device communications through a hub. (*E.g.*, EX-1003, Abstract.) To accomplish this, the inventors modified a traditional USB hub module to work with a USB bridge, allowing host-to-host and host-to-device communications without interrupting normal hub functionality. In operation, when a consumer device operating in host mode is connected to a downstream port, the USB signal is routed to the vehicle's embedded USB host through the USB bridge, rendering the two hosts compatible. (*E.g.*, EX-1003, Claim 1, 4:27-4:33.) But when a consumer device operating in device mode is connected, the USB signal is instead routed directly to the vehicle's embedded host, thereby bypassing the bridge. (*E.g.*, EX-1003, 4:25-27.) Thus, the ports are "dual-role" such that the device can be connected regardless of its USB mode, or even handle the same device changing modes. (*E.g.*, EX-1003, 4:20-4:22.) The alternative paths for data transmission are shown below in an annotated version of Figure 4.

Figure 4

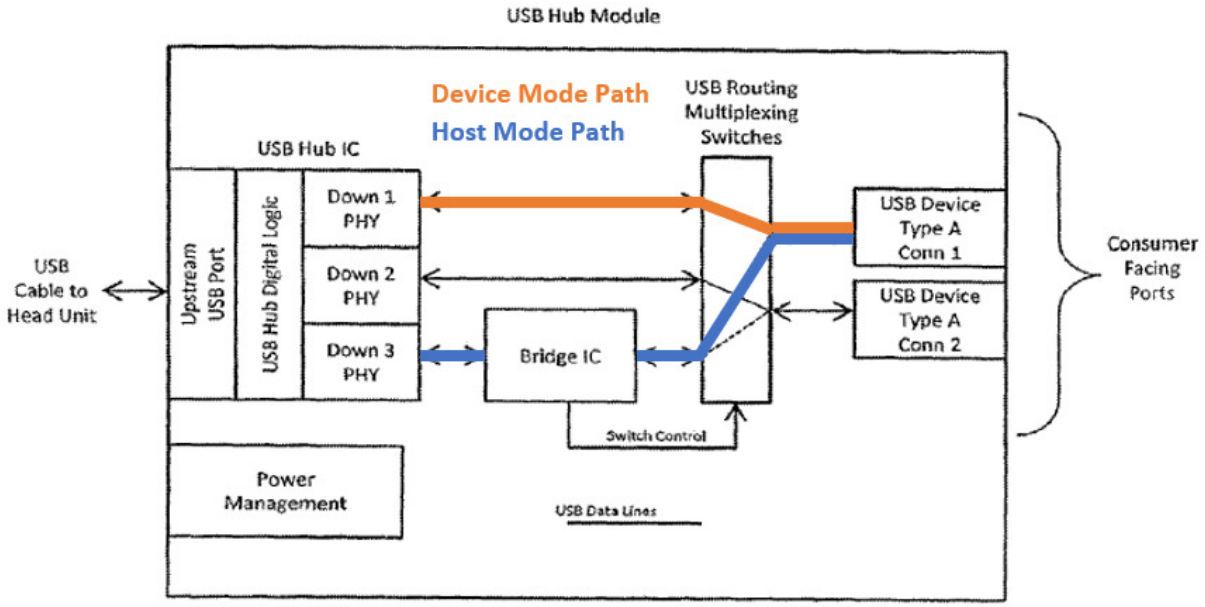

(*E.g.*, EX-1003, Figure 4 (annotated).)

47. Unlike dual lane, the invention can be implemented with a single upstream line and allows consumer devices operating in either mode to connect to the vehicle using any port. Moreover, this design does not force the infotainment system to act as a device; instead, it continues to act as a host throughout its operation, allowing for persistent communication with downstream devices. (*E.g.*, EX-1003, 8:59-9:4.) Notably, the invention also does *not* require OTG ports or adapters; it instead takes an entirely different approach to solving the problem. (*See e.g.*, EX-1003, 1:21-24.)

48. Below, I provide more detail on the Challenged Patents:

- **’420 Patent -** The ’420 Patent is generally directed to devices, systems, and methods for facilitating host-to-host and host-to-device communications through a USB hub. (EX-1003, Abstract.) The ’420 Patent contains claims directed to a USB hub module (claims 1-6), an integrated circuit (claims 7-12), a method of operating a USB hub module (claims 13-14) (not challenged in this petition), a USB connectivity module (claims 15-17), and a communication system (claims 18-20) (not challenged in this petition).
- **’643 Patent -** The ’643 Patent is generally directed to methods for facilitating host-to-host and host-to-device communications through a USB hub. (EX-1011, Abstract.) Claims 1-15 are directed to methods.
- **’962 Patent -** The ’962 Patent is generally directed to devices for facilitating host-to-host and host-to-device communications through a USB hub. (Ex. 1005, Abstract.) The ’962 Patent contains claims directed to a USB hub module (claims 1-13) and an integrated circuit (claims 14-19). Dependent claims further describe implementing this functionality while also providing power to the connected device. (EX-1005.)
- **’072 Patent - T**he ’072 Patent is generally directed to a method for facilitating host-to-host and host-to-device communications through a USB hub. (EX-1009, Abstract.) Its single claim recites a method wherein an embedded USB host is connected to the USB hub.

VIII. THE ASSERTED PRIOR ART

49. I understand that Petitioner contends that the Challenged Patents are obvious over various combinations of the following prior art. In addition to the summaries provided by Petitioner's expert, the following teachings (or lack thereof) are notable.

a. Chang

50. Chang discloses a hub for implementing host-to-host transmission through a dedicated host port connected to a bridge. (EX-1014, Abstract, [0020].) Chang's hub addresses the express goal of "easily establishing a connection between a computer and another computer." (EX-1014, [0003].) Chang's dedicated host port and bridge allow for host-to-host transmission between a first host device (such as a computer) connected to an uplink port and a second host device (such as another computer) connected to the dedicated host port. (EX-1014, [0020].) The Chang hub also comprises a number of downlink ports for linking devices connected to the downlink ports to Chang's uplink port. (EX-1014, [0019].) The downlink ports allow for host-to-device transmission between devices connected to the downlink ports and a host device connected to the uplink port. (EX-1014, [0019].)

b. Chang II

51. Chang II[1] does not disclose a USB hub but is instead directed to a data transmission bridge device. (EX-1015, Abstract.) The Chang II bridge device has a first connection interface and a second connection interface connected by a control chip. (EX-1015, [0023].) Chang II's control chip comprises a bypass circuit unit, a detection unit, a CPU, and a pair of USB controllers. (EX-1015, [0013].) These components are arranged in a particular logical configuration to form two transmission paths between the pair of connection interfaces. (EX-1015, Figs. 1, 5, [0023].) The first connection interface is for connecting to a first host device, and the second connection interface is "for connecting to a host device 3 or a slave device 4." (EX-1015, [0022] (emphasis added).) Chang II teaches that the second connection interface utilizes A-Type male connector design for connection to a host device, but that an adapter can be used to instead connect a slave device to the second connection interface. (EX-1015, [0029].) The control chip detects whether a host or slave device is connected to the second connection interface, and selects one of the two transmission paths to enable data transmission between the

[1] Chang and Chang II have different inventors, Ming-Te Chang and Chi-Tung Chang, respectively. (EX-1014; EX-1015.)

first and second connection interfaces. (EX-1015 [0023].) The first transmission path is the "bridge transmission path," which "spans first connection interface 11, first USB controller 131, buffer unit 136, second USB controller 132, and second connection interface 12." (EX-1015, [0023].) The control chip enables the bridge transmission path when a second host device connects to the second connection interface and the control chip receives a response from the second host device that is responsive to an inquire signal produced by the control chip. (EX-1015, [0026].) The second path is the "bypass path," which "spans first connection interface 11, first USB controller 131, bypass circuit 133, and second connection interface 12." (EX-1015, [0023].) The bridge enables the bypass path when a user connects a slave device to the second connection interface and the control chip receives an inquire signal from the slave device. (EX-1015, [0027].)

c. Chutorash

52. Chutorash is directed to a system for connecting a vehicle control system to a device, such as a mobile phone, via USB. Chutorash identifies two problems with vehicle user interface systems. First, it notes that the human-machine interfaces of vehicles and portable devices are "typically separate, look very different, and are difficult to use together." (EX-1029,1:31-1:32.) Because "[a]pplications provided on portable devices are typically not configured to interact

with a vehicle," Chutorash explains that there is a need for "improved user interface features and/or connectivity features." (EX-1029, 1:32-1:33, 1:34-35.) Second, Chutorash states that "[t]here is a need for effective display reproduction and/or user interface reproduction from a remote source to an in-vehicle display or other in-vehicle interface." (EX-1029, 1:36-1:39.) The portions of Chutorash quoted in Petitioner's summary stand for the unremarkable proposition that USB was a known method for connecting a mobile phone to a vehicle's infotainment system. (IPR2024-00230, Pet., 39-41; PGR2024-00011, Pet. 39-41.)

d. AN965727

53. AN965727 is a Cypress application note. (EX-1064). The note provides guidance on "Designing USB Type-C Products Using Cypress's CCG1 Controllers." (*Id.*, 1.) The document "only discusses the power delivery aspect of the reference designs; it does not discuss anything about the USB data delivery over the Type-C cable." (*Id.*, 4.) Nor does the document discuss data dual-role ports or multi-host USB systems. Rather, it contemplates a standard, top-down USB topology.

IX. THERE WAS NO MOTIVATION TO COMBINE THE ASSERTED REFERENCES

a. Chang and Chang II

54. In my opinion, a POSITA would not have been motivated to combine Chang with Chang II at the time of the invention. As I explain below, it is not clear why a POSITA would have looked to Chang II because it does not contemplate dual-role devices or dual-role ports. Instead, Chang II uses a fundamentally different approach to establishing host-to-host communications that requires the use of an adapter. (EX-1015, [0029], Fig. 3.) The proposed combination would require logical and unintuitive leaps, taking certain elements from Chang II (i.e., a part of its bridge), ignoring others (i.e., the remainder of the bridge, purported micro-AB connectors), and adding missing pieces (i.e., a routing switch).

55. First, I have been asked to consider whether a POSITA would modify Chang to add dual-role device compatibility based on Chang II.

56. In my opinion, a POSITA would not turn to Chang II as a solution for providing dual-role device capability to the Chang system because Chang II does not itself contemplate dual-role devices. Chang II never mentions a dual role device (i.e., a smart phone performing a function like CarPlay). Rather, it

discusses connecting a first host device 2 to *either* a second host device 3 or a slave device 4 through a second connection interface of a data transmission bridge device, as shown below.

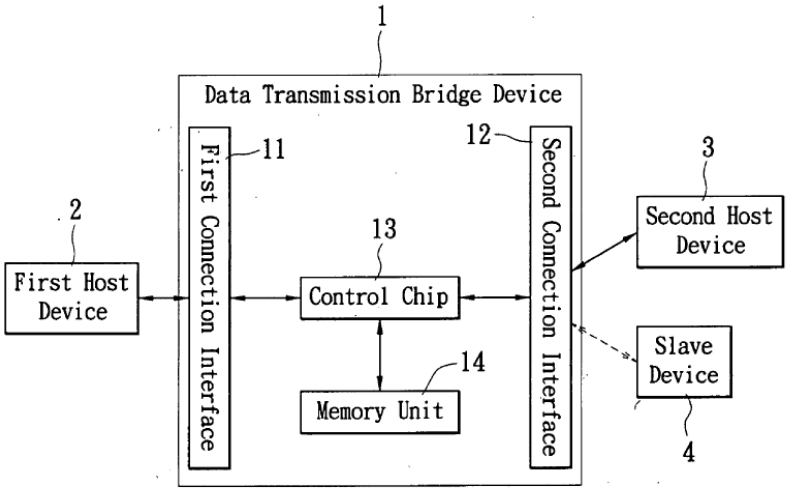

FIG. 1

(EX-1015, [0020], Fig. 1.)

57. A POSITA would have appreciated that, based on Chang II's disclosures, the second host device 3 and slave device 4 were not a single device operating in different modes. First, this is evidenced by the naming convention wherein the devices are separately identified and numbered. (EX-1015, [0020], [0022], Fig. 1.) Second, the specification is silent as to the presence of dual role devices. (EX-1015.) Third, the specification acknowledges that, by convention, a slave device would normally have a B type female connector whereas a host device

would normally have an A-type male connector. (EX-1015, [0029].) Yet the specification does not describe a dual-role device with both connector types, it only contemplates allowing *either* type to connect. (EX-1015, [0030].)

58. In view of these disclosures, Chang II's passing reference to the USB standard does not establish that it is compatible with dual-role devices. Although the USB standard discloses a micro-AB connector to accommodate hosts and devices on the same port, Chang II does not reference it by name. (EX-1015, [0030].) It merely claims, without proof or explanation, that it is compatible with all connectors from the USB standard. (EX-1015, [0030].) In my opinion, a POSITA reading Chang II would not have interpreted this to mean that the invention either contemplated working with or worked with the AB connector, and therefore disclosed dual-role device compatibility.

59. Even if Chang II did contemplate dual-role devices it would still require micro-AB connectors. (*See* EX-1015, [0030].) A POSITA would have understood that any design requiring micro-AB connectors would severely limit the utility of the design because the connector-type is uncommon, meaning consumer devices would be incompatible or require an adapter. I do not understand Petitioner to have included micro-AB connectors as part of its proposed combination, yet I do not believe that a POSITA would have adopted Chang II's

approach while also disregarding its allegedly significant incorporation-by-reference of micro-AB connectors.

60. On the other hand, Petitioner adds to Chang II's disclosures by claiming that it discloses a switch. It does not. Chang II references the concept of directing signals along different transmission paths based on the mode of the connected device, but nowhere discloses the use of a switch to do so. (EX-1015, [0025].) As shown below, Chang II discloses multiple paths but no switching device.

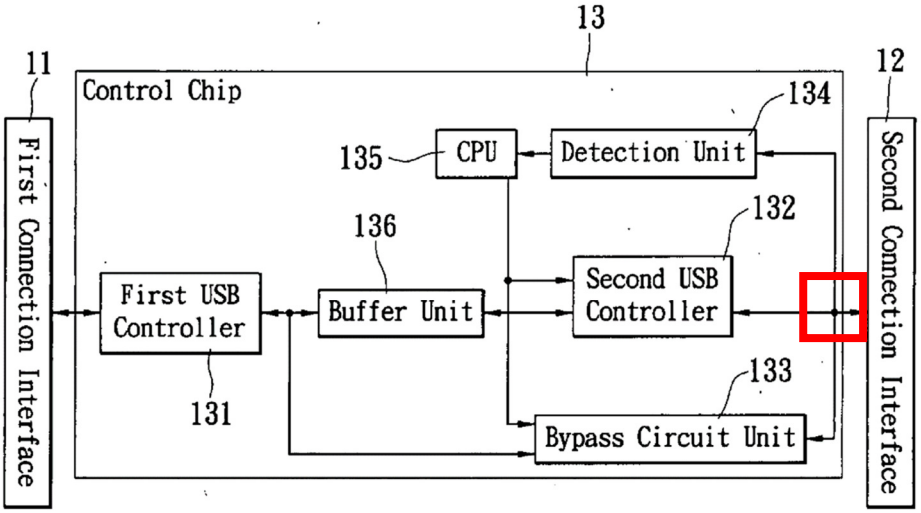

FIG. 5

(EX-1015, [0020], Fig. 1 (annotated).)

61. In fact, Chang II does not disclose any mechanism which performs the function of directing signals. A POSITA would have appreciated that there are

numerous ways to direct signals, such as using shared memory, which do not require switches. For example, incoming data can be written to a portion of the memory and the controller can instruct an output port to read data from that portion of memory for transmission. Thus, incoming data can be directed to any specific output port without using a switch while still performing the function of directing the data.

62. Finally, a POSITA would not have turned to Chang II to modify Chang to accommodate dual-role devices because Chang could already perform this feature. Chang discloses "a host port 50 for being linked to a host, and a bridge 52 connected between the hub control unit 46 and host port 50." (EX-1014, [0020].)

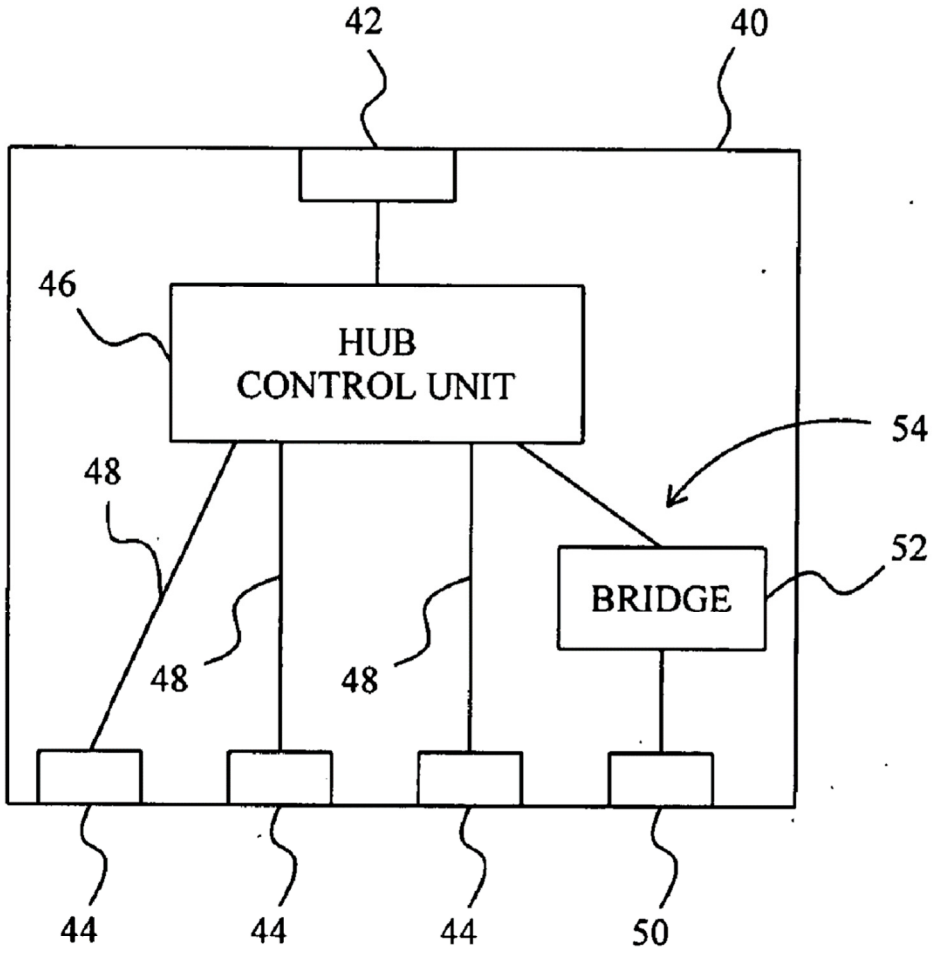

FIG. 3

(EX-1014, Fig. 3.)

63. Chang teaches that "bridge 52 provides a function for host-to-host communications." (EX-1014, [0020].) As such, Chang can accommodate a dual role device. (EX-1014, [0004], [0020].) Thus, Petitioner's rationale for turning to Chang II fails.

64. Second, I have been asked to consider whether combining Chang and Chang II is "common sense" in view of possible benefits like cost savings or general compatibility between the references.

65. Starting with cost savings, there is insufficient data to reach any conclusion. Cost analysis requires a comparison between alternative solutions. Here, the cost of the proposed combination is unknown. Furthermore, because the combination has more components than Chang or Chang II individually, evaluating cost would require a detailed analysis. Generally, a POSITA would be skeptical that a solution with more complexity and components would yield cost savings.

66. Nor would it have been common sense to think that Chang II would improve Chang. As discussed above, Chang II discloses that USB hosts and USB devices typically use different connectors. (EX-1015, [0029].) Chang II uses an adapter to solve this problem. (EX-1015, [0030].) A POSITA, however, would not have been motivated to use an adapter-based solution to implement a hub with dual-role device functionality. Chang II requires a single adapter because it has a single downstream port: the second connection interface. (EX-1015, [0020], Fig. 1.) But combined with a USB hub, the system would require an adapter for every dual-role device that may be connected during use. Even worse, a consumer would have to connect or disconnect the adapter every time the device changes modes.

Switching adapters is inconvenient and, in the automotive context, even dangerous. The Challenged Patents use a fundamentally different approach to avoid these problems.

67. Third, I was asked to consider if Chang II advances Chang's stated objective of "easily establishing a connection between a computer and another computer." (EX-1014, [0003].) To the contrary, the proposed combination adds significant complexity. For example, Chang's hub uses fixed ports to easily connect an upstream host to downstream devices, including a device in USB host mode. (EX-1014, [0020], Fig. 3.) It does not require detecting the mode of the connected device or any signal routing. Chang II, on the other hand, includes a control chip with a CPU, a detection unit, multiple controllers, a bypass unit, a buffer unit, a memory unit, and two connection interfaces, all arranged in a particular logical configuration. (EX-1015, [0013].) Thus, a POSITA would not look to Chang II to make connections easier.

68. Indeed, even the proposed combination requires both signal detection and routing, making it significantly more *complex* to establish a connection between computers. Moreover, the combination is unintuitive because rather than taking Chang II's bridge design, Petitioner's proposed combination relies on a sub-part of the bridge: the detection unit. I have reviewed Chang II and, in my opinion,

there is nothing to indicate the detection unit is removable. (*See* EX-1015.) Nor does Chang II contain any teachings as to how the detection unit would need to be modified to work with a hub like the one disclosed in Chang. (*See* EX-1015.)

69. Finally, I was asked to consider if a POSITA would have been motivated to combine the references based on Chang II's mention of a USB hub. Having reviewed Chang II, its passing reference to a hub function would not have created motivation to combine.

70. In Chang II's 12 pages of disclosure, the word "hub" appears only twice. (EX-1015.) Chang II explains that the "data transmission bridge device 1 acts with intermediate transmission function (similar to the commonly known USB HUB function)" when the connected device is in USB device mode. (EX-1015, [0027].) Similarly, it explains that the control chip 13 "functions like a USB Hub chip" when it performs "intermediate transmission function." (EX-1015, [0040].)

71. Neither instance states that the invention acts as a hub or is otherwise compatible with USB hubs. Rather, Chang II merely analogizes to the USB hub transmission function when the invention is in certain modes. (EX-1015, [0027] ("the data transmission bridge device 1 merely acts with intermediate transmission function... *similar to* the commonly known USB HUB function" (emphasis added).)

72. Moreover, the specific function Chang II analogizes is passing a signal from a single downstream USB device to an upstream USB host. (EX-1015, [0027], [0040].) While a hub is certainly capable of performing this function, it is not how a POSITA would generally understand a hub. Rather, a USB hub is characterized by its ability to connect *multiple* downstream ports to a single upstream port. (EX-1018, 6, 22.) Chang II, however, discloses only a single downstream port: the second connection interface. (EX-1015, [0015], Fig. 1.) Thus, a POSITA would not have understood Chang II's passing mention of hubs to indicate compatibility, but rather as conveying that the bypass path allows transmission (i.e., does not interrupt the connection between the USB device and host).

b. Chang, Chang II, and Chutorash

73. In my opinion, a POSITA would not have been motivated to combine Chang and Chang II with an additional reference, Chutorash, at the time of the invention.

74. Chutorash concerns a different problem than Chang, Chang II, or the Challenged Patents. Specifically, it contemplates the need for (1) "improved user interface features and/or connectivity features" and (2) "effective display reproduction and/or user interface reproduction from a remote source to an in-

vehicle display or other in-vehicle interface." (EX-1029, 1:32-1:33, 1:34-35, 1:36-1:39.) In other words, Chutorash discloses the need for an improved high-level, user interface system (i.e., something like CarPlay).

75. But Chutorash's priority date predates CarPlay and does not envision the various technical challenges of implementing such a system. (EX-1029.) Chutorash does not contemplate, much less disclose, dual-role devices, dual-role ports, or host-to-host communication. And the network Chutorash envisions is a traditional, top-down architecture in which a single embedded host serves as the control point for all downstream devices. (EX-1029, 4:1-3, Fig. 9 (illustrating that vehicle commands portable device, even when using infotainment system compatibility features).) Chutorash provides no disclosure of a USB host capable of connecting to another USB host, much less how those two hosts would communicate or coordinate control of the overall USB system.

76. Implementing host-to-host communication in an automobile setting is not a simple matter. It is not enough for a bridge device to simply be inserted into the existing USB hub. If this were attempted, it could result in a scenario in which the two hosts send conflicting commands to downstream devices. This would result in a frustrating experience for most users as device behavior would be unpredictable. Given the nature of some downstream USB devices in infotainment

systems (e.g., GPS navigation), this could present a dangerous situation. To successfully implement host-to-host and dual-role functionality in an automotive setting would require significant alteration not taught in Chutorash. For at least these reasons, it is my opinion that a POSITA would not look to the top-down USB architecture taught in Chutorash as an example of an embedded host that would provide any useful improvement to Petitioner's proposed combination of Chang and Chang II.

77. I understand that Petitioner relies on Chutorash for its mention of an embedded USB host. Because of the difficulties enumerated above, it is my opinion that a POSITA would not be motivated to combine the simple embedded host taught in Chutorash with Chang and Chang II absent the benefit of hindsight after reading the Challenged Patents. or would a POSITA expect such a combination to succeed given that Chutorash neither contemplates nor discloses overcoming the significant challenges it would present.

c. Chang, Chang II, and AN965727

78. In my opinion, a POSITA would not have been motivated to combine Chang and Chang II with yet another reference, AN965727, at the time of the invention.

79. AN965272 is an application note. An application note is a document that explains how to solve a problem using a particular product. An application note is typically created by the manufacturer of the product to demonstrate the product's functionality and increase sales. Based on my experience, competition incentivizes chip manufacturers to demonstrate how to solve a problem with their product and only their product.

80. Here, AN965272 is an application note written by Cypress for Cypress customers using Cypress products. Specifically, it concerns implementing USB features using the CCG1 product family. But neither Chang nor Chang II discuss the CCG1 product family. Thus, a POSITA would not necessarily expect the teachings of AN965272 to apply to Chang or Chang II.

81. The improvements identified by Petitioner as the alleged motivation for combining AN965272 with Chang and Chang II are not specific to Cypress's products, but are instead part of the USB Power Delivery (PD) Specification 2.0 ("USB-PD"). The introduction of this specification introduced an increased amount of power deliverable over USB to 100W and created a system for altering the power supplied based on the needs of the connected device.

82. Neither AN965272 or the USB-PD specification discuss dual-role devices or dual-role hubs. When the application note mentions a dual-role port, it

immediately clarifies that this refers to a port that can connect to a consumer device with dual *power* roles (i.e., the device can either consume or provide power). (EX-1064, 8 ("this term has no relationship to the USB OTG ability to swap data host and data peripheral roles.")) In fact, the application note explicitly states that it does not contemplate *any* kind of USB data transfer and is only concerned with power delivery. (EX-1064, 4 (This application note only discusses the power delivery aspect of the reference designs; it does not discuss anything about the USB data delivery over the Type-C cable.”))

83. Additionally, both AN965272 and the USB-PD specification address power delivery in traditional USB architectures involving a single data host controlling multiple downstream devices. Neither contemplates power delivery in a system involving two separate hosts communicating via a host-to-host bridge. For this reason, it is my opinion that a POSITA would not be motivated to combine the Cypress port controller taught in AN965272 with Chang I and Chang II, particularly in the absence of hindsight.

84. Furthermore, it is my opinion that a POSITA that did attempt to combine power delivery taught in AN965272 with Chang and Chang II would not have a reasonable expectation of success. Implementing power delivery in a system with a host-to-host bridge is not a simple matter—particularly since it is the

host that typically determines which connected devices are power consumers and which deliver power. Effectively managing power delivery in such a system would require significant communication and coordination between the two hosts, something that is not taught in AN965272. Nor is this a standard arrangement that would be familiar to a POSITA, as evidenced by Petitioner's difficulty in designing its own system in which hosts are able to effectively communicate. Implementing power delivery in such a system would require substantial experimentation on the part of a POSITA. Further limiting the likelihood of success, AN965272 provides no indication that specific CCG1 port controllers discussed are even capable of supporting dual-role devices or dynamic role-reversal. Outside of the USB-OTG context—which the application note expressly disavows—this is not a standard capability for port controllers.

X. THE PROPOSED COMBINATIONS DO NOT MEET ALL LIMITATIONS OF THE CHALLENGED CLAIMS

85. Even if there were motivation to combine, the proposed combinations fail to meet the claim limitations. Namely, the combinations do not achieve bidirectional initiation of communication as required by the independent claims of the '420 and '962 Patents.

86. The Challenged Patents facilitate host-to-host communication using a switch and a bridge. In the '420 Patent, for example, the routing switch is "configured to connect the second USB port to the first USB port through the USB bridge" when "the consumer device connected to the second USB port is in a USB host mode." (EX-1003, Claim 1.) But the claims of the '420 and '962 patent *further* require that the switch and bridge provide "bidirectional initiation of communication" between the host and consumer device. (*E.g.*, EX-1003, 9:19-25 (claim 1); *see also id.*, 9:66-10:5, 10:50-55, 11:7-14, 12:17-27 (other independent claims).)

87. Based on the specification, a POSITA would understand this limitation to mean that both hosts (i.e., the embedded USB host and the consumer device) can send, receive, recognize, and respond to requests using the claimed invention. For example, Figure 7 provides a detailed schematic of a USB bridge device.

Figure 7

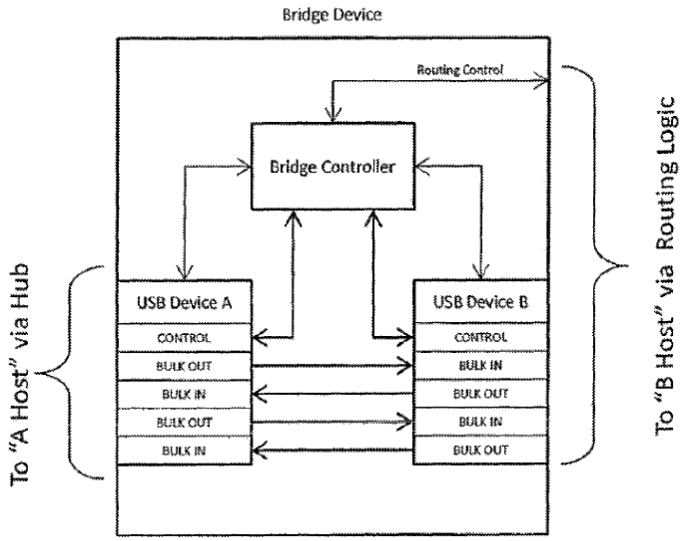

(EX-1003, Fig. 7.)

88. Figure 7 shows that "the IN endpoints of Device A are connected to the OUT endpoints of Device B." (EX-1003, 7:29-32.) But just as important, the OUT endpoints of Device A are connected to the IN endpoints of Device B." (EX-1003, 7:29-32.) This allows Device A to communicate with Device B *and* Device B to communicate with Device A. In other words, the communication is bi-directionally initiated. While the Challenged Patents do not claim a particular mapping of endpoints within the bridge, they do claim this "bidirectional initiation of communication." (E.g., EX-1003, Claim 1.)

89. This is particularly important given the context in which the claimed invention was developed. The goal of the invention captured in the challenged

claims was to enable CarPlay functionality with a single upstream line to a vehicle's infotainment system and persistent downstream connectivity for the other ports in the car. (*See* EX-1003, 3:4-67.) In order for the system to accomplish this, it was important for both USB hosts—the CarPlay-enabled iPhone and the embedded USB host—to be able to initiate communication by sending, receiving, recognizing, and responding to requests.

90. None of the asserted combinations teach the bidirectional initiation limitation. For example, a background reference wherein one device "operates as a USB Host which initiates communication requests" while the other "operates as a USB Device which responds to those requests" does not establish bidirectional initiation of communication between hosts. (*E.g.*, IPR2024-00228, Paper 1, 60 (quoting EX-1025, 1:17-20).)

91. Similarly, Chang describes a "host-to-host transmission path," (EX-1014, [0020]), but that does not make it bidirectional. For example, an embedded host might simply send a command to a second host. This is a "host-to-host transmission" regardless of whether the second host can send its own commands.

92. Nor does Chang II disclose bidirectional initiation of communication. Chang II explains that, when a second host responds to an inquire signal from the bridge's control chip, the chip enables the bridge transmission path. (EX-1015,

[0026].) But the fact that the connection "complete[s] the bridging" between the two hosts does not indicate if both devices can initiate communication. (EX-1015, [0026].)

93. I understand that Petitioner's expert has suggested that bidirectional initiation of communication could be interpreted as device enumeration. I disagree.

94. Enumeration is defined in the USB Specification as the process of "detecting and identifying" a USB device connected to a bus. (EX-1018, 20.) But instead of using this well-known term from the specification, Applicant instead claimed bidirectional initiation of communication. To a POSITA, this would be a meaningful distinction.

95. Regardless, Chang II does not even show bidirectional enumeration. The most natural reading is that Chang II's reference to "complet[ing] the bridging," (EX-1015, [0026]), simply means activating the transmission path (i.e., opening an electrical connection between the two devices). First, Chang II never refers to this process as enumeration or describes the steps of enumeration like identifying devices, assigning them addresses, etc. (EX-1015, [0026].) Moreover, the second host is identified by the control chip, not the first host, as the control chip must detect the operating mode of the device to open the correct transmission

path. (EX-1015, [0026].) And only one of the devices—the second host—responds to the chip's identification inquiry. (EX-1015, [0026]). Thus, Chang II does not describe bidirectional enumeration.

XI. THE '643 PATENT IS PATENTABLE UNDER SECTION 112

a. Definiteness

96. In my opinion, the challenged claims, read in light of the specification and the prosecution history, inform those skilled in the art about the scope of the invention with reasonable certainty.

i. "the USB hub and USB bridge have different components and functionality"

97. Claims 1, 5, and 10 specify that the USB hub and the USB bridge must have different components and functionality. (EX-1011.) A POSITA would understand this language to simply mean that the hub and the bridge do not have coextensive components, nor do they perform the same functionality.

98. Petitioner questions whether a POSITA would know how different the components and functionality must be. Having reviewed the claims, the specification, and the prosecution history, there are no terms of degree with respect to the differences. (EX-1011, EX-1012.) Thus, the answer is readily-apparent to a POSITA: because the inventors did not further limit or qualify the term "different," any difference will suffice.

99. Nor would a POSITA find the "different functionality" language redundant or confusing. The claims generally describe the role of the hub and bridge and the different functions they perform. (*See e.g.,* EX-1011, Fig. 6, Fig. 7, 4:41-50, 5:67-6:2, 6:10-13, 6:40-55, 7:26-8:38.) Based on the description in the patent, the hub routes multiple downstream ports to a single upstream port, whereas the bridge allows two hosts to communicate. Thus, it would make sense to a POSITA that the claim term simply confirms these differences. This is confirmed by the prosecution history, wherein the examiner added the entire phrase "different components and functionality" (along with other amendments) to better place the claim in condition for allowance. (EX-1012 at p. 107-108).

ii. "routing logic circuit"

100. Claims 1, 5, and 10 recite a routing logic circuit. In my opinion, a POSITA would recognize this term—particularly in view of the claims and the specification—to refer to a class of structures that direct signals from one input/output interface to another.

101. The plain language of the claim suggests to a POSITA that it refers to a circuit (or class of circuits) for routing signals. This is confirmed by the claims, which detail the various functions performed by the routing logic circuit. For example, representative claim 1 explains that the routing logic circuit "rout[es] the

USB signals emanating from the USB device" in accordance with a determination as to whether the consumer USB device is operating in host or device mode. (EX-1011, claims 1, 5, 10.) The claims further recite a USB hub and a USB bridge for rendering two hosts compatible. (EX-1011, claims 1, 5, 10.)

102. In view of these disclosures, it would be clear to a POSITA what the routing logic circuit routes (signals from the consumer device), where it routes them (to either the USB bridge or USB hub), and why (in accordance with whether the consumer device is in host mode or device mode).

103. The specification further discloses multiple configurations in which the routing logic circuit could be enacted. Specifically, the routing logic circuit could be implemented as a discrete device or inside a USB multiplexing switch and may include circuitry to implement "USB routing logic." (EX-1011, 4:35-38, 4:40-43, Figs. 4-6.) The exact components used to enact the routing switch would necessarily vary based on the implementation, nor are they particularly material to the invention so long as the routing operation is achieved. Thus, the use of various switches, logic gates, control lines, port identifiers, etc. is a design choice left to the POSITA. But in view of the specification's examples, a POSITA could identify exemplary structures to perform the described routing operation. (EX-1011, 4:35-38, 4:40-43, Figs. 4-6.)

iii. "signal detection circuit"

104. Claims 1 and 5 recite a signal detection circuit. Based on the claims and the specification, a POSITA would understand this term to refer to a class of circuits for receiving and identifying signals.

105. As a threshold matter, it is my opinion that a POSITA would understand the term "circuit" to necessarily denote a structure here. In the context of electrical engineering, the term circuit is commonly used to describe a configuration of electrical components (e.g., resistors, transistors, sensors, etc.) for performing a function. (EX-1015 (defining circuit as "[o]ne or more conducting paths which serve to interconnect electrical elements, in order to perform a desired function such as amplification or filtering.")) Moreover, it is common practice to name the circuit (or class of circuits) based on its purpose. For example, an electrical engineer would understand a voltage-divider circuit to refer to a structure comprising electrical components (most commonly, series-resistors) configured to divide a voltage. This formula, an adjective followed by the term "circuit", is used to denote structures for various purposes.

106. Unsurprisingly, the claim term "signal detection circuit" is used to describe circuits for receiving and detecting various qualities of a signal including its presence, voltage attributes (*i.e.*, analog or digital), or power characteristics.

(EX-2012; EX-2013; EX-2014.) The same is true in the specific context of the invention. In fact, the USB Specification 2.0 uses the term "circuit" throughout, revealing that skilled artisans understood it to denote structure. (*E.g.*, EX-1018, 5, 8.)

107. Here, the claims make clear that the specific signal attribute detected by the circuit is whether the connected consumer device is acting in USB host mode or USB device mode. (EX-1011, claim 1, 5.) A POSITA would therefore have understood "signal detection circuit" to be the name for a class of structures that can be used to detect signals and identify whether the attached consumer device is acting as a host or as a device.

108. The USB 2.0 specification describes examples of this type of signal in several sections, including 4.6 and 7.1:

> **4.6.1 Attachment of USB Devices**
> All USB devices attach to the USB through ports on specialized USB devices known as hubs. Hubs have status bits that are used to report the attachment or removal of a USB device on one of its ports.
>
> The host queries the hub to retrieve these bits. In the case of an attachment, the host enables the port and addresses the USB device through the device's control pipe at the default address. The host assigns a unique USB address to the device and then determines if the newly attached USB device is a hub or a function. The host establishes its end of the control pipe for the USB device using the assigned USB address and endpoint number zero.

> If the attached USB device is a hub and USB devices are attached to its ports, then the above procedure is followed for each of the attached USB devices.
>
> If the attached USB device is a function, then attachment notifications will be handled by host software that is appropriate for the function.

(*See* EX-1018, 20, 119.)

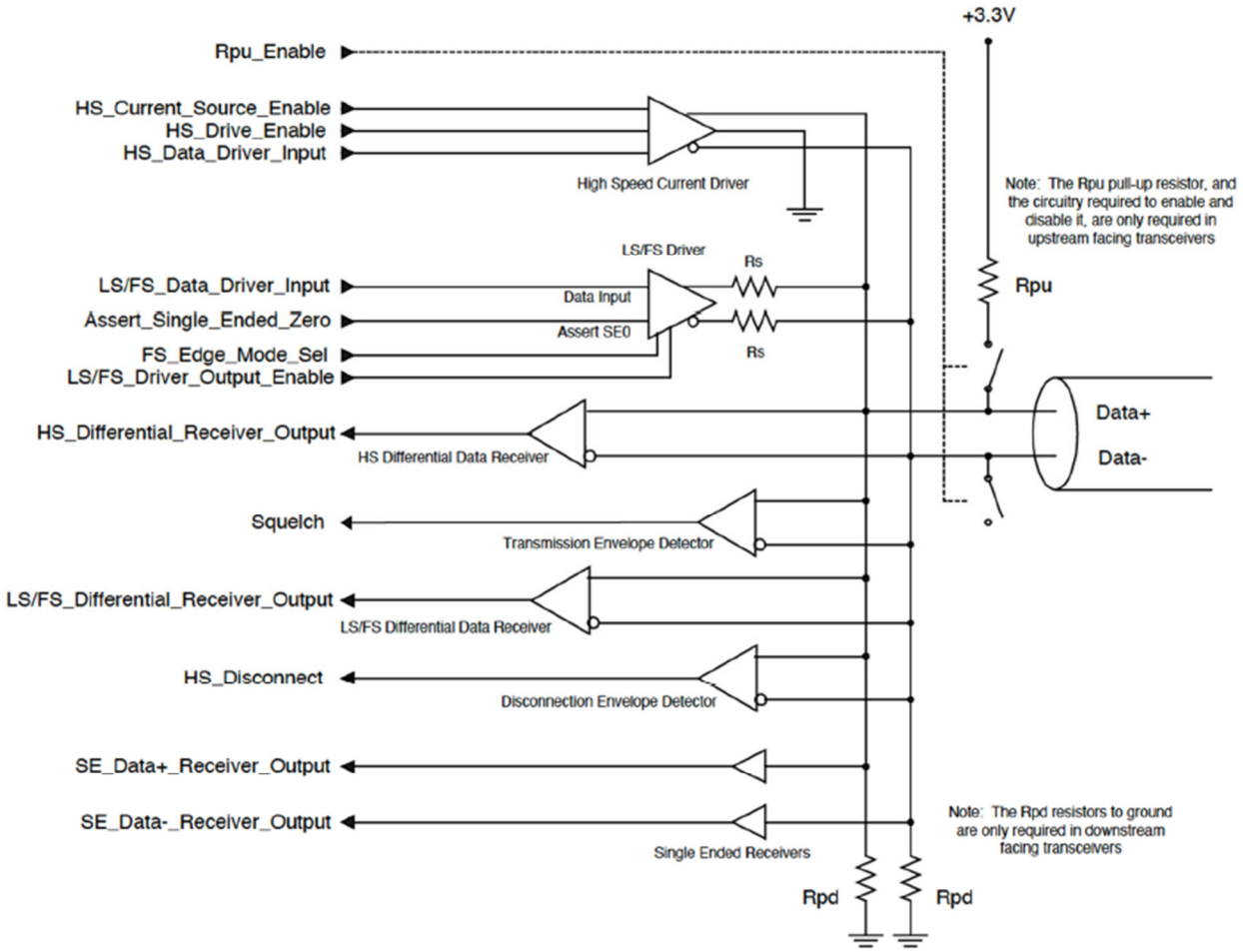

Figure 7-1. Example High-speed Capable Transceiver Circuit

(*See id.*, Fig. 7-1.)

109. As described in these sections, USB hosts and devices generate different signals depending on whether they are operating in host or device mode. During the attachment detection and enumeration processes, these signals are

received by a hub and used to determine how the different devices should be managed. A POSITA would certainly have been aware of this at the time the challenged claims were invented.

110. Thus, a POSITA would understand with reasonable certainty that "signal detection circuit" in the context of the claims of the '643 patent refers to the class of structures that can perform the claimed signal reception and identification functions.

111. I have reviewed the examples that Dr. Welch recites in ¶¶ 74-87 of his declaration (EX-1013), where Dr. Welch discusses the class of circuits with which a POSITA would have been familiar that perform signal reception and detection functions to identify attachment of hosts or devices. This discussion confirms that a POSITA would understand that the term signal detection circuit within the context of the claims refers to the class of circuits for performing the claimed signal reception and detection functions.

iv. "wherein the USB routing switch includes the signal detection circuit"

112. Dependent claims 4 and 9 further recite that the USB routing switch includes the signal detection circuit. In my opinion, a POSITA would understand the scope of these short and straightforward claims with reasonable certainty.

113. Beginning with the plain and ordinary meaning of the term, to include means "to take in or comprise as part of a whole or group." (EX-2011.) Based on my 25 years of industry experience, this definition is consistent with how the term "includes" is used in the field of electrical engineering. Moreover, I have reviewed the specification and the prosecution history, and there is no reason to believe that the phrase "includes" should be given a special meaning in this context. (EX-1011; EX-1012.) The inventors did not limit the meaning of the term before the patent office, nor did they recite a special definition in the specification. (*Id.*)

114. Therefore, a POSITA would understand the term "include" to mean "comprise as part of a whole or group." In the context of claims 4 and 9, a POSITA would understand that the claims are satisfied if the USB routing switch comprises the signal detection circuit as part of a whole or group.

115. This interpretation is consistent with the surrounding claims. Exemplary claim 1, from which claim 4 indirectly depends, recites that the signal detection circuit determines whether the consumer device is in host or device mode and the bridge is bypassed in accordance with that determination. (EX-1011, claim 1.) Claim 3 further recites that the bridge bypass of claim 1 is performed by a routing switch. (EX-1011, claim 3.) Claims 1 and 3 demonstrate the functional relationship between the two devices but are silent as to their physical layout.

Thus, claim 4 properly depends from claims 1 and 3 by further requiring that the routing switch comprises the signal detection circuit as part of a whole or group. (*See* EX-1011, claim 4.)

116. Given that some claims require the routing switch to include the signal detection circuit whereas others do not, a POSITA would understand that the location of the signal detection circuit was a matter of design choice. Because of the functional relationship between the signal detection circuit and the routing switch, it would be natural to implement a routing switch that includes the signal detection circuit. The method of claims 4 and 9 could be performed with such a system, assuming the other limitations were met. Alternatively, the signal detection circuit could be located elsewhere while still performing the claimed method of the independent claims. As a practical matter, it would be easy for a POSITA to implement either configuration in view of the '643 patent's disclosures and a POSITA's knowledge of the art.

b. Written Description

117. In my opinion, the specification reasonably conveys to those skilled in the art that the inventors possessed the claimed subject matter—namely, claims 4 and 9—as of the filing date of the '643 Patent.

118. As discussed above, claims 4 and 9 further require that "the USB routing switch includes the signal detection circuit." (EX-1011.) The specification describes the roles of these components and how they interact: "[i]n the case where the consumer device is acting as a USB Device, signals are routed normally through a USB Hub to the Head Unit. In the case where consumer device is acting as a USB Host, signals between the consumer device and the vehicle's embedded USB Host are routed and processed through a USB Host to Host Bridge." (EX-1011, 4:25-4:31.) Figure 4 additionally discloses "USB Routing Multiplexing Switches" configured between the consumer facing ports and the USB hub. (EX-1011.) And in an alternative embodiment disclosed in the specification, "the switching device comprises USB routing logic." (EX-1011, Fig. 5.)

119. In my opinion, a POSITA would not require a detailed structural description of these components in view of these disclosures and functional descriptions because a POSITA would already be familiar with both types of circuits. In other words, under the circumstances the specification could rely on the knowledge of a POSITA because the devices were well-known in the art.

120. Moreover, in the art of electrical engineering, circuits can be combined with predictable results. For example, because circuits behave predictably when combined, a POSITA could select a desired circuit from the class

of signal detection circuits and expect it to work with a given routing switch. Conversely, a variety of routing switches could be used to route the signals in accordance with a determination by a signal detection circuit.

121. The same applies to the "including" requirement; separate circuits are frequently combined with predictable results. For example, to perform analog-to-digital conversion, a microcontroller could interface with an analog to digital converter, or it may just as easily include an analog to digital converter circuit. There is no reason to think that known detection circuits could not be included in a routing switch.

122. As such, a POSITA would understand the specification to provide more than adequate disclosure to establish that the inventors possessed the full scope of the claimed invention.

I declare that all statements made herein of my own knowledge are true and that all statements made on information and belief are believed to be true, and that these statements were made with knowledge that willful false statements and the like so made are punishable by fine or imprisonment, or both, under section 1001 of Title 18 of the United States Code.

Dated: April 18, 2024

Henry H. Houh

Dr. Henry H. Houh

Henry H. Houh

15 Ballard Ter.
Lexington, MA 02420
henry.houh@gmail.com
cell: 781-325-8273

Education

Massachusetts Institute of Technology, Cambridge, MA

- PhD in Electrical Engineering and Computer Science, February 1998. "Designing Networks for Tomorrow's Traffic," thesis supervised by Professor David Tennenhouse and Professor John Guttag. GPA 4.7/5.0
- Master of Science in Electrical Engineering and Computer Science, February 1991. "Demonstration of a laser repetition rate multiplier," thesis. GPA 4.5/5.0
- Bachelor of Science in Electrical Engineering and Computer Science, June 1989. "Boundary element analysis of arbitrarily shaped dielectric structures," thesis. GPA 4.7/5.0
- Bachelor of Science in Physics, February 1990. GPA 4.7/5.0

MITx, Cambridge, MA

- September 2020 – present: Enrolled in Statistics and Data Science MicroMasters program, a sequence of five MIT-offered graduate-level courses in statistics and machine learning, culminating in a MicroMasters certificate. Have completed four of five required courses.

Experience

Houh Consulting Inc. / Independent Consultant

- 2009 - present: Technical consultant specializing in Social Networking, Web 2.0, Web Site Development, Data Networking, Optical Networking, Telecommunications, Media Streaming and Voice Over IP. Clients include: Akin Gump Strauss Hauer & Feld LLP, Arnold & Porter Kaye Scholer LLP, BBN, Baker Botts LLP, Barnes & Thornburg LLP, BBN Technologies, Beus Gilbert McGroder PLLC, Bracewell LLP, Christensen O'Connor Johnson Kindness PLLC, Cooley LLP, Covington & Burling LLP, Cozen O'Connor P.C., DLA Piper, Davis Polk & Wardwell LLP, Desmarais LLP, Duane Morris LLP, Erise IP, P.A., Faegre Baker Daniels LLP, Finnegan, Henderson, Farabow, Garrett & Dunner, LLP, Fish & Richardson P.C., Goldman Ismail Tomaselli Brennan & Baum LLP, Haynes and Boone, LLP, Kaye Scholer, Kellogg Huber Hanson Todd Evans & Figel PLLC, Kirkland & Ellis LLP, Klarquist Sparkman, LLP, McCarthy Tetrault LLP, McGuireWoods LLP, Morgan, Lewis & Bockius LLP, Munger Tolles & Olson LLP, Orrick, Herrington & Sutfliffe LLP, O'Melveny & Myers LLP, Orrick, Herrington & Sutcliffe LLP, Paul Hastings LLP, Paul, Weiss, Rifkind, Wharton & Garrison LLP, Perkins Coie LLP, Quinn Emanuel Urquhart & Sullivan, LLP, Sidley Austin LLP, Smith Baluch LLP, Sterne, Kessler, Goldstein & Fox PLLC, Troutman Sanders LLP, Venable LLP, Weil, Gotshal &

Manges LLP, Wiley Rein LLP, Wilmer Cutler Pickering Hale and Dorr LLP, and Winston & Strawn LLP.

BlocksCAD Inc. (H3XL spin-out)

- 2014 - present: Founder and member of Board of Directors. BlocksCAD is a visual Computer-Aided Design (CAD) program, designed to teach children mathematics and geometric visualization. BlocksCAD is being used in U.S. schools and worldwide in maker spaces, with 350,000+ users. BlocksCAD was selected to be part of the LearnLaunch 2017 Boost Accelerator, the MIT Play Labs 2018 Summer Accelerator, and the MassChallenge 2018 Boston Cohort. Recipient of DARPA DSO grant in 2014, and SBIR grant from the USDA in 2019.

H3XL Inc. d/b/a Einstein's Workshop (formerly Lexington Robotics)

- 2009 - 2022: Founder and President. Started a science, technology, engineering and math enrichment program and creative/maker space, in 7,000 square feet of space. Serve 2,000+ kids and families annually. As of end of 2022, have delivered an estimated 250,000 student-instruction-hours of STEM courses. Principle Investigator for 2-year DARPA grant to improve 3D Computer Aided Design tool developed in-house for the purposes of teaching 8 year olds and up 3D CAD.

Eons

- 2008 - 2009: Chief Technology Officer. Created product that Eons acquired from BBN Technologies. Integrated BBN product with Eons social networking platform and significantly increased the Eons group creation rate. Helped evaluate advertisement platform offerings and rolled out the "Boom Network" advertising network. Eons raised $32 million from General Catalyst Partners, Charles River Ventures, Sequoia Capital, and Intel Capital.

BBN Technologies

- 2007 - 2008: Delta Division, Vice President of Technology. Grew "Boomerang" counter-sniper project engineering team and significantly de-risked $10 million worth of product deliveries. Identified sales team leading to $10 million dollars of new sales within 6 months and $100+ million in additional orders in the following two years. Boomerang was a significant asset leading to the acquisition of BBN by Raytheon in 2009. Created new business plan and grew team; launched new fully-featured social networking web site in 5 months. Served as lead expert witness in patent infringement lawsuit, resulting in $58 million jury award to client; verdict for patents I testified on were upheld on appeal which resulted in a $120 million settlement.
- 2004 - 2007: Delta Division, Director of Technology, responsible for commercializing IP and creating new businesses. Hired and grew division's initial engineering team. Wrote three business plans, two of which were funded. For call center business plan, acted as general manager, hiring and managing engineering team, inside sales team, and identifying and recruiting a new general manager. Identified and recruited other key employees to Delta Division, including senior members of team leading to successful internal sales growth and spin-outs of projects. Contracted by BBN to BBN spin-out PodZinger as VP of Operations and Technology. Additional areas studied include mesh networking, network security, satellite communications, and semantic web.

Aptiv Exhibit 2001 Page 2
Microchip v. Aptiv IPR2024-00228
Apendix A

PodZinger Inc. (BBN spin-out, also known as EveryZing and now RAMP)

- 2006: Vice President of Operations and Technology. Significantly upgraded capability of consumer-facing search site and redeployed web site from company to co-location facility. Identified key portions of infrastructure for upgrading and cost reduction. Helped write business plan, evaluating advertisement models of revenue. Hired in operations replacement and phased back to BBN.

Commonwealth Capital

- 2004: Entrepreneur-in-residence (informally), performed technical due diligence on business plans, brainstormed ideas for new businesses with venture partner. With venture partner, left for portfolio company BBN to form core of commercialization team.

Empirix, Inc./Teradyne, Inc.

- 2001 - 2004: Chief Technologist, Engineering Manager, Web Application Test Group. Researched potential new product areas; developed product plan and prototype. Responsible for three new and existing products. Managed off-shore development team. Chief architect for all web testing products. Re-architected core testing product, helped write javascript interpreter. Provided technical vision for core product.
- 2000 - 2001: Chief Technologist, Communication Infrastructure Test Group. Responsible for incorporating new technology internally, tracking new technologies, technical evaluation of partnerships and potential acquisitions. Helped develop division strategy. Developed plans which formed core capabilities for successful new products introduced in 2004-5.
- 2000 - 2001: Engineering Manager, Communications Infrastructure Test Group. Execution of new product plan developed in prior role. Grew team from four existing engineers to team of over 30 on immediate team and over 40 on project. Delivered new platform in one year. Platform and derivatives accounted for large portion of booked products for the division within 2 years and is currently (2008) a key portion of new product offerings.
- 2000: Empirix was formed as a spin-out of Teradyne in January 2000. Reported to CEO in carve-out of Empirix from Teradyne.
- 1999: (Teradyne) Director of Business Development, Software Test Units. Reported directly to Chairman of the Board/Founder and then to general manager of software test unit (6 divisions of Teradyne). Evaluated and researched acquisition and partnership candidates. Internally assessed technology position in market and gaps in product lines. Worked with senior division staff to develop new product strategies. Attended internal Teradyne divisional board meetings. Chairman served as my mentor.

3Com Corporation/NBX Corporation

- 1999: Software Engineer 5. Continued work after 3Com acquisition of NBX. Built cross-division relationships for new products and research directions. NBX was acquired by 3Com in March 1999.
- 1997 - 1999: (NBX) Senior Scientist and Engineer. Work in IP Telephony. Architected next-generation product. Protocol design and validation for core protocol now used tens of millions of times daily. Led team in integration of IP protocols into current product. Designed audio reconstruction algorithms. Developed applications for bug analysis and diagnosis of system

Aptiv Exhibit 2001 Page 3
Microchip v. Aptiv IPR2024-00228
Apendix A

problems. Implementation of network simulator. Work on collaborative projects with external partners. Worked to identify gaps in product. Representative at numerous trade shows. Innovated novel methods of using product.

MIT Department of Electrical Engineering and Computer Science, Cambridge, MA

- 1991 - 1998: Research assistant, Telemedia Network Systems Group. Design, development, and implementation of Gigabit ATM network for distributed multimedia system. Studied host interface design issues. ATM network simulation.
- Spring 1989, Fall 1990, Spring 1995: Teaching assistant, Computation Structures digital systems course. (Spring 1995 Head TA)
- 1988 - 1989: Head laboratory teaching assistant for Computation Structures. Responsibilities included writing and revising lab assignments, and maintaining the lab.
- 1987: Laboratory teaching assistant for Computation Structures.
- 1987: Design, construction, and programming of 16-bit computer.

Agora Technology Group, Incorporated

- 1994 - 1996: Founder and CEO. Conceived and oversaw development of targeted advertising-supported Web sites. Responsible for company's vision and direction. Attended the first two WWW Conferences, presenting a workshop and paper at the first, and appearing on the "Commercialization and Economics of the Web" panel and chairing the "Where Commercial Services and the Web Are Headed" panel at the second. Sold company intact; is currently an operating stand-alone company.

AT&T Bell Laboratories, Holmdel, NJ

- 1989 - 1990: Implementation of cascadable all-optical fiber logic gate. Modelocking of all-fiber erbium laser. Construction of modelocked laser repetition rate booster. Strong optics laboratory and fiber optic experience.
- Summer 1988, 1987: Research in integrated optics. Analysis of rectangular waveguides using microwave modeling. Fabrication of integrated optical components.

Honors

- MIT Alumni Association Great Dome Award, 2010, Baker 60th Anniversary Reunion Co-Chair (highest group award given by MIT Alumni Association)
- MIT Alumni Association Presidential Citation Award (now known as Great Dome), 2008, Member of MIT Chairman's Salon committee
- MIT Alumni Association Bronze Beaver Award, 2007 (highest individual award given by MIT Alumni Association)
- MIT Alumni Association Volunteer Honor Roll, February 2004
- MIT Alumni Association Lobdell Award, 1999
- Boston Museum of Science Gold Pin for 1000 hours of Volunteer Service, April 1999
- MIT Alumni Association Presidential Citation Award (now known as Great Dome), 1997, Member of Alumni Online Communications Committee

Aptiv Exhibit 2001 Page 4
Microchip v. Aptiv IPR2024-00228
Apendix A

Patents and Patent Publications

- U.S. Patent #9,697,231, H. Houh, J. Stern, R. Spina, M. Meteer, "Methods and apparatus for providing virtual media channels based on media search," July 4, 2017.
- U.S. Patent #9,697,230, H. Houh, J. Stern, "Methods and apparatus for dynamic presentation of advertising, factual, and informational content using enhanced metadata in search-driven media applications," July 4, 2017. See also WO2007056485.
- U.S. Patent #7,975,296, L. Apfelbaum, H. Houh, T. Mayberry and G. Friedman, "Automated security threat testing of web pages," July 5, 2011. See also US20030159063, WO2003067405.
- U.S. Patent #7,877,736, H. Houh and J. N. Stern, "Computer language interpretation and optimization for server testing," January 25, 2011. See also US20050138104, WO2005043300.
- U.S. Patent #7,801,910, H. Houh and J. N. Stern, "Method and apparatus for timed tagging of media content," September 21, 2010. See also US20070112837, US20090222442, WO2007056535.
- U.S. Patent #7,590,542, D. C. Williams, W. C. Hand, H. Houh, A. R. Seeley, "Method of Generating Test Scripts Using a Voice-Capable Markup Language," September 15, 2009. See also EP1530869, US20030212561, WO2003096663.
- U.S. Patent #6,967,963, H. H. Houh, P. Anderson, C. Gadda, "Telecommunication method for ensuring on-time delivery of packets containing time-sensitive data," November 22, 2005. See also EP1060400, WO2000033092, CA2318774.
- U.S. Patent #5,144,375, M. C. Gabriel, H. H. Houh, N. A. Whitaker, "Sagnac Optical Logic Gate," September 1, 1992. Also issued as European Patent # EP0456422, July 23, 1997, German Patent #DE69126913, August 28, 1997
- U.S. Patent Application Publication No. 20020015387, "Voice Traffic Packet Capture and Analysis Tool for a Data Network" (Abandoned in 2007)
- U.S. Patent Application Publication No. 20020016708, "Method and Apparatus for Utilizing a Network Processor as Part of a Test System" (Abandoned in 2007)
- U.S. Patent Application Publication No. 20020016937, "Method and Apparatus for Utilizing a Network Processor as Part of a Test System." (Abandoned in 2007) See also WO2002011413.
- U.S. Patent Application Publication No. 20070106646, "User-directed navigation of multimedia search results" (Abandoned in 2009)
- U.S. Patent Application Publication No. 20070106660, "Method and apparatus for using confidence scores of enhanced metadata in search-driven media applications" (Abandoned in 2009)
- U.S. Patent Application Publication No. 20070106685, "Method and apparatus for updating speech recognition databases and reindexing audio and video content using the same" (Abandoned in 2015)
- U.S. Patent Application Publication No. 20070118873, "Methods and apparatus for merging media content" (Abandoned in 2015)
- U.S. Patent Application Publication No. 20090222442, "User-directed navigation of multimedia search results" (Abandoned in 2016)
- U.S. Patent Application 11/395,732, "Search snippet creation for audio and video data" (Abandoned in 2009)
- U.S. Patent Application 11/774,931, "Methods and apparatus for managing a social networking web site"
- U.S. Patent Application 11/774,947, "Methods and apparatus for organizing media files"
- U.S. Patent Application 11/774,956, "Methods and apparatus for managing an online event"

- U.S. Provisional Patent Application 61/086,909, "Measuring and ranking relationship activity"
- U.S. Provisional Patent Application 61/086,914, "Detecting media object commonality"
- U.S. Provisional Patent Application 61/086,904, "Message categorization based on message characteristics"
- U.S. Provisional Patent Application 61/086,905, "Photo tagging to request action"

Trials, Testimony and Depositions

- Case No. 1:06CV682 (CMH/BRP), Verizon vs. Vonage, U.S. District Court for the Eastern District of Virginia, filed expert report, was deposed and testified at trial.
- Case No. 1:08CV157 (CMH/TRJ), Verizon vs. Cox, U.S. District Court for the Eastern District of Virginia, was deposed and testified at trial.
- Case No. 5:09-cv-476, Two-Way Media vs. AT&T, U.S. District Court for the Western District of Texas, filed expert report, testified at trial.
- Case No. 2:10-cv-248 (RAJ/FBS), ActiveVideo Networks vs. Verizon, U.S. District Court for the Eastern District of Virginia, filed expert report and was deposed as an expert witness.
- Case No. 1:11-cv-00880-TSE-JFA, Bear Creek Technologies, Inc. vs. Verizon Services Corp., et al, U.S. District Court for the Easter District of Virginia, was deposed as an expert witness.
- Case No. 3:10-CV-298-BBC, AlmondNet, Inc. vs. Microsoft Corp., U.S. District Court for the Western District of Wisconsin, filed expert report.
- Case No. 6:10-cv-00597, Guardian Media Technologies, Ltd. Vs. AT&T Operations, Inc. et al., U.S. District Court for the Eastern District of Texas, Tyler Division, filed expert report.
- Case No. ESCV2010-02282C, The Octopus Solution LLC v. Gary Brown et al., Essex, MA Superior Court, testified at trial.
- Investigation No. 337-TA-882, In the matter of Certain digital media devices, including televisions, Blu-ray disc players, home theater systems, tablets and mobile phones, components thereof and associated software, U.S. International Trade Commission, filed expert reports, was deposed and testified at hearing.
- Investigation No. 337-TA-995, In the matter of Certain communications or computing devices, and components thereof, U.S. International Trade Commission, filed expert reports, and was deposed.
- Case No. 8:12-cv-122-LES-TDT, Prism Technologies LLC v. AT&T Mobility LLC, U.S. District Court for the District of Nebraska, filed expert report, was deposed and testified at trial.
- Case No. 11-2684 (JWL), Sprint Communications Co., L.P., v. Comcast Cable Communications, LLC, et al., U.S. District Court for the District of Kansas, filed expert report and was deposed.
- Case No. 11-2686 (JWL), Sprint Communications Co., L.P., v. Time Warner Cable, Inc., et al., LLC, et al., U.S. District Court for the District of Kansas, filed expert report, was deposed, and testified at trial.
- Case No. 12-487 (SLR), Cox Communications, Inc., et al., v. Sprint Communications Company L.P., et al., U.S. District Court for the District of Delaware, filed expert report and was deposed.
- Case IPR 2014-00039, Microsoft Corporation v. B.E. Technology LLC, U.S. Patent No. 6,628,314. Submitted declaration and cross-examined in deposition.
- Case IPR 2014-00086, Apple, Inc. v. Evolutionary Intelligence, LLC, U.S. Patent No. 7,010,536. Submitted declaration and cross-examined in deposition.
- Case No. 6:11-CV-421, Stragent, LLC v. Intel Corporation, U.S. District Court for the Eastern District of Texas, Tyler Division, deposed and testified at trial as a fact witness.

- IPR2014-01366, IPR2014-01367, IPR2014-01368, Samsung et al. v. Straight Path, submitted IPR declarations and was deposed.
- IPR2015-1006, IPR2015-1007, Cisco v. Straight Path, submitted IPR declarations.
- IPR2014-01457, IPR2014-01459, Microsoft v. Biscotti, submitted IPR declaration and was deposed.
- IPR2016-00302, Apple v. Nonend, submitted IPR declaration.
- IPR2014-00812, Yelp and Twitter v. Evolutionary Intelligence, submitted IPR declaration.
- IPR2015-00307, Cisco v. AIP, submitted IPR declaration.
- Microsoft v. Acacia, submitted IPR declaration.
- IPR2015-00342, AT&T Mobility LLC and Cellco Partnership d/b/a Verizon Wireless v. Solocron, submitted IPR declaration.
- Mediatube v. Bell Canada, Canadian Federal Court, submitted expert report and testified at trial.
- CBM2016-00036, Google v. At Home Bondholder's Liquidating Trust, submitted CBM declaration.
- IPR2016-01198, IPR2016-01201, Apple, Inc. v. VoIP-Pal.com, Inc., submitted IPR declaration and was deposed.
- Case No. 3:14-cv-2824-VC, Trend Micro Incorporated v. Rpost Holdings, Inc., et al, submitted expert report and was deposed
- Akamai v. Limelight Networks, IPR2016-01631, IPR2016-01711, IPR2017-00249, IPR2017-00349, submitted IPR declarations and was deposed
- Hyperlync Technologies v. Verizon Sourcing, No. 650151/2015 New York Supreme Court, submitted declaration and was deposed
- Cascades Streaming Technologies v. Big Ten Networks, submitted expert reports and was deposed
- Klaustech, Inc. v. Google LLC., Case No. 4:10-CV-05899-JSW (N.D. Cal.), submitted expert report and was deposed
- Cisco v. Uniloc, IPR2017-00198, IPR2017-00058, submitted IPR declarations and was deposed.
- Cisco v. Uniloc, IPR2017-00597, submitted IPR declaration and was deposed
- Twitter v. Youtoo Technologies, LLC, IPR2017-01133, IPR2017-01131, submitted IPR declarations and was deposed
- Taser International Inc. (now Axon Enterprise, Inc.) v. Digital Ally Inc., IPR2017-00375, submitted IPR declaration and was deposed
- Taser International Inc. (now Axon Enterprise, Inc.) v. Digital Ally Inc., IPR2017-00376, IPR2017-00515, IPR2017-00775, submitted IPR declarations
- HTC Corporation v. IPA Technologies, IPR2018-00306, IPR2018-00307, submitted IPR declaration
- Hulu v. Soundview, IPR2018-00864, IPR2018-01023, submitted IPR declarations and was deposed
- XpertUniverse v. Cisco, 3:17-cv-3848, U.S. District Court for Northern District of California, submitted declaration in support of claim construction and was deposed
- Improved Search v. Microsoft, C.A. No. 16-cv-650-JFB-SRF (Del.), submitted declaration in support of claim construction
- Apple v. Uniloc, IPR2018-00361, IPR2018-00394, IPR2018-00395, IPR2019-00700, IPR2019-00701, IPR2019-01667, submitted IPR declarations
- LG Electronics v. Uniloc, submitted IPR declaration
- SRC Labs and Saint Regis Mohawk Tribe v. Microsoft, 2:18-cv-00321-JLR, U.S. District Court for Western District of Washington at Seattle, submitted declaration in support of claim construction and was deposed

- Verizon Wireless v. Barkan Wireless IP Holdings LP, submitted IPR declarations
- Verizon Wireless and Samsung Electronics America Inc. v. Barkan Wireless IP Holdings LP, IPR2019-199, IPR2019-200, IPR2019-234, IPR2019-631, IPR2019-632, submitted IPR declarations
- Samsung Electronics America Inc. v. Barkan Wireless IP Holdings LP, IPR2019-100, submitted IPR declaration
- Cisco Systems Inc. v. Meetrix IP LLC, IPR2019-539, IPR2019-540, IPR2019-541, IPR2019-542, IPR2019-543, IPR2019-544, submitted IPR declarations
- GMG Products LLC v. Traeger Pellet Grills LLC, PGR2019-24, PGR2019-34, PGR2019-35, PGR2019-36, submitted PGR declaration and was deposed
- Uniloc 2017 LLC v. Google LLC, 2:18-cv-00502-JRG-RSP, U.S. District Court for the Eastern District of Texas, Marshall Division, submitted declaration in support of claim construction
- Microsoft Corporation v. Uniloc 2017 LLC, IPR2020-00102, IPR2020-00103, submitted IPR declarations
- Microsoft Corporation and HP Inc. v. Synkloud Technologies, LLC, IPR2020-00316, IPR2020-01031, IPR2020-01032, IPR2020-01269, IPR2020-01270, IPR2020-01271, submitted IPR declarations
- Seven Networks, LLC v. Apple Inc, 2:19-cv-115-JRG, U.S. District Court for the Eastern District of Texas, Marshall Division, submitted declaration in support of claim construction
- Unified Patents Inc. v. Ortiz & Associates Consulting, LLC, IPR2019-00743, submitted IPR declaration
- Uniloc 2017 LLC v. Apple Inc., 3:19-cv-01905-JD, U.S. District Court for the Northern District of California, San Francisco Division, submitted declaration in support of claim construction and was deposed
- ClearPlay Inc. v. Dish Network LLC et al.; 2:14-cv-00191, U.S. District Court for the District of Utah, Central Division, submitted expert report and re-examination declarations, was deposed, and testified at trial
- AMC Networks, Inc. et al v. Sound View Innovations, LLC, IPR2020-00482, submitted IPR declaration
- Case No. 1:17-cv-01734-RGA, Sprint Communications Co., L.P., v. Charter Communications, Inc., et al., U.S. District Court for the District of Delaware, filed expert report and was deposed.
- CommScope Technologies LLC et al. v. Barkan Wireless IP Holdings LP et al., IPR2020-00827, IPR2020-00829, IPR2020-00831, IPR2020-00833, IPR2020-00835, IPR2020-00838, submitted IPR declarations
- Cisco Systems Inc. v. Monarch Networking Solutions LLC, IPR2020-01226, submitted IPR declaration
- CoolTV Network.com v. Blackboard, Inc., Facebook, Inc., International Business Machines Corporation, Kaltura, Inc., Limelight Networks, Inc., Microsoft Corporation, Ooyala, Inc., Snap, Inc., and Trapelo Corp., submitted declaration in support of claim construction and was deposed
- Facebook, Inc. v. Onstream Media Corporation, IPR2020-01507, IPR2020-01508, IPR2020-01525, IPR2020-01527, IPR2020-01528, submitted IPR declarations
- Hisense Co LTD. v. Maxell, LTD, IPR2020-01598, IPR2020-01600, submitted IPR declarations
- Microsoft Corp. v. O'Brien, IPR2021-00015, submitted IPR declaration and was deposed
- Sable Networks Inc. v. Cisco Systems, Inc., WA:20-CV-00288-ADA, U.S. District Court for the Western District of Texas, Waco Division, submitted declaration in support of claim construction
- Peloton Interactive, Inc. v. Icon Health and Fitness Inc et al., IPR2021-00342, submitted IPR declaration

- Hulu, LLC v. SITO Mobile R&D IP, LLC et al., CBM2020-00028, IPR2020-00158, IPR2020-00206 , IPR2020-00219 , IPR2020-00265 , IPR2020-00298 , IPR2020-00304 , IPR2020-00308 , submitted CMB and IPR declarations and was deposed
- Twitter, Inc. and Google LLC v. B.E. Technology, LLC, IPR2021-00482, IPR2021-00483, IPR2021-00484, IPR2021-00485, submitted IPR declarations
- MG Freesites LTD v. ScorpCast, LLC, IPR2021-00511, submitted IPR declaration
- Avionte, LLC v. Sandeep Acharya, Samar Basnet, and Aqore LLC, Arbitration, Hon. Jeffrey Keyes (Ret.)
- Microsoft Corporation v. WSOU Investments, LLC d/b/a Brazos Licensing and Development, IPR2021-00751, submitted IPR declaration
- SAP America, Inc. v. Express Mobile, Inc., IPR2021-01144, IPR2021-01145, IPR2021-01146, submitted IPR declarations
- StratosAudio Inc. v. Hyundai Motor America, 6:20-cv-01125-ADA, U.S. District Court for the Western District of Texas, Waco Division, submitted claim construction declaration and was deposedPeloton Interactive, Inc. v. Ifit Health and Fitness Inc, IPR2022-00029, IPR2022-00030, submitted IPR declarations and was deposed
- Investigation No. 337-TA-1263, In the matter of Certain televisions, remote controls, and components thereof, U.S. International Trade Commission, filed expert reports, was deposed, and testified at hearing
- Alexander Stross v. Netease, Inc., et al., U.S. District Court (Central District of California), Case 2:20-cv-00861-AB(JC), filed expert reports, and was deposed
- Ralph Ledergerber v. Netease, Inc., et al., U.S. District Court (Central District of California), Case 2:20-cv-00862-AB(JC), filed expert reports and was deposed
- John Walmsley v. Netease, Inc., et al., U.S. District Court (Central District of California), Case 2:20-cv-00863-AB(JC), filed expert reports and was deposed
- Bernhard Kuhmstedt v. Netease, Inc., et al., U.S. District Court (Central District of California), Case 2:20-cv-02044-AB(JC), filed expert reports and was deposed
- Netflix, Inc. v. CA, Inc., IPR2021-01319, submitted IPR declaration and was deposed
- F45 Training Pty Ltd. v. Body Fit Training USA Inc., C.A. No. 20-1194 (LPS) (D. Del.), filed expert report
- Apple v. Fintiv, IPR2022-00976, IPR2022-01149, IPR2022-01150, IPR2023-00399, submitted IPR declarations and was deposed
- Estech Systems, Inc. v. Howard Midstream Energy Partners d/b/a Howard Energy Partners, C.A. No. 6:20-cv-777-ADA (Western District of Texas, Waco Division), filed expert reports and was deposed
- Echelon Fitness Multimedia, LLC. v. Peloton Interactive, Inc., IPR2020-01187, submitted IPR declaration and was deposed
- VIZIO. V. Maxell Ltd., IPR2022-01458, submitted IPR declaration
- Maxell, Ltd. et el. v. VIZIO, Inc., Case No. 2-21-cv-06758 (C.D. Cal.). filed declaration and was deposed
- Microsoft Corporation v. SurfCast, Inc., submitted IPR declarations
- The Walt Disney Company et al. v. WAG Acquisition LLC, IPR2022-01227, IPR2022-01228, IPR2022-01346, submitted IPR declarations and was deposed
- Rakuten Rewards et al. v. IBM, submitted IPR declarations and was deposed
- Fubotv Media Inc. v. Sito Mobile R&D IP, LLC et al., submitted IPR declarations
- Unified Patents, LLC v. Noblewood IP LLC, IPR2022-01111, submitted IPR declaration
- Unified Patents, LLC. v. Pedersen, Peter Henrik, IPR2023-00029, submitted IPR declaration
- Ericsson Inc v. Dali Wireless Inc., submitted IPR declarations

- Universal Electronics, Inc. et al. v. Roku, Inc., IPR2022-00818, submitted declarations and was deposed
- Google LLC. v. Wildseed Mobile LLC et al., IPR2023-00244, IPR2023-00245, IPR2023-00246, IPR2023-00247, IPR2023-00248, submitted declarations
- Lululemon Athletica Canada Inc. et al. v. Nike, Inc., IPR2023-00180, IPR2023-00424, submitted declarations
- Zoho Corporation, et al. v. Meetrix IP, LLC, IPR2023-00371, IPR2023-00377, IPR2023-00379, IPR2023-00380, IPR2023-00382, submitted declarations
- WSOU Investments, LLC d/b/a/ Brazos Licensing and Development v. Google LLC, 6:20-cv-572, U.S. District Court for the Western District of Texas, Waco Division, submitted reports and was deposed
- Google LLC v. Safecast Limited LLC, IPR2023-00652, submitted declaration
- Investigation No. 337-TA-1338, In the matter of Certain smart televisions, U.S. International Trade Commission, filed reports and was deposed
- Cisco Systems, Inc. v. Orckit IP LLC, IPR2023-00714, submitted declaration
- SupplyPro, Inc. v. Sandvik Machining Solutions AB, et al., AAA Case No. 01-22-000-7897. submitted declaration
- TrackThings LLC v. NETGEAR, Inc., Case No. 22-00981-RGA-JLH, U.S. District Court for the District of Delaware, submitted declaration
- Walt Disney Parks & Resorts US Inc. v. Agile Journeys LLC; IPR2024-00029, submitted declaration
- Aylo Freesites Ltd v. Dish Technologies LLC; IPR2024-00043, IPR2024-00044, IPR2024-00045, IPR2024-00046, IPR2024-00047, IPR2024-00048, IPR2024-00146, IPR2024-00147; submitted declarations
- Arm Inc. et al. v. Icpillar LLC; IPR2024-00476, IPR2024-00566; Retained by Arm; submitted declarations
- Microsoft Corp et al. v. Litl LLC, IPR2024-00454, IPR2024-00455, IPR2024-00456, IPR2024-00457, IPR2024-00458; submitted declarations
- Cisco Systems Inc et al. v. InfoExpress Inc, IPR2024-00539, IPR2024-00540, IPR2024-00677, IPR2024-00678; submitted declarations
- Vizio Inc v. Multimedia Technologies Pte Ltd; IPR2024-00722, IPR2024-00723; Retained by Vizio; submitted declarations
- Sap America Inc v. Isix IP LLC; IPR2024-00615; Retained by SAP; submitted declarations
- Cisco Systems Inc et al. v. Portsmouth Network Corp; IPR2024-00505, IPR2024-00506; submitted declarations

Publications

- "IP switching: server driven flow classification," H. H. Houh, *Proceedings of the Washington University Workshop on Integration of IP and ATM* , November 1996.
- "Aurora at MIT," D. D. Clark, H. H. Houh, and D. L. Tennenhouse, Editors, *MIT Laboratory for Computer Science Technical Report 673*, December 1995.
- "ViewStation Applications: Implications for Network Traffic," C. J. Lindblad, D. Wetherall, W. Stasior, J. F. Adam, H. H. Houh, M. Ismert, D. Bacher, B. Phillips, and D. L. Tennenhouse, *IEEE Journal of Selected Areas in Communications*, 1995.

- "The VuNet Desk Area Network: Architecture, Implementation, and Experience," H. H. Houh, J. F. Adam, M. Ismert, C. J. Lindblad, and D. L. Tennenhouse, *IEEE Journal of Selected Areas in Communications*, 13 (4), May, 1995.
- "Reducing the Complexity of ATM Host Interfaces," H. H. Houh and D. L. Tennenhouse, Hot Interconnects II Symposium Proceedings, Stanford, August 11-12, 1994.
- "Media-intensive data communications in a `desk-area' network," J. F. Adam, H. H. Houh, M. Ismert, and D. L. Tennenhouse, IEEE Communications, August 1994.
- "ViewStation Applications: Intelligent Video Processing Over A Broadband Local Area Network," C. J. Lindblad, D. J. Wetherall, W. Stasior, B. Phillips, D. Bacher, J. Adam, H. Houh, M. Ismert, and D. L. Tennenhouse, Proceedings of the 1994 USENIX Symposium on High-Speed Networking, Oakland, CA, August 1994.
- "The Media Gateway: Live Video on the World Wide Web," H. H. Houh, C. J. Lindblad, J. Soo, D. L. Tennenhouse, and D. J. Wetherall, Workshop at the 1994 World Wide Web Conference, Geneva, Switzerland, May 1994.
- "Active Pages: Intelligent Nodes on the World Wide Web ," H. H. Houh, C. J. Lindblad, and D. J. Wetherall, Proceedings of the 1994 World Wide Web Conference, Geneva, Switzerland, May 1994.
- "Wavelength Division vs. Code Division Access Methods for Optical Networks," H. H. Houh, Area Exam Paper, May 1993.
- "Experience with the VuNet: A Network Architecture for a Distributed Multimedia System," J. F. Adam, H. H. Houh, D. L. Tennenhouse, Proceedings of the 18th Conference on Local Computer Networks, pp. 70-76, September 1993
- "The VudBoard: A Simple DMA Interface," H. H. Houh, Proceedings of the 4th Gigabit Minijam, January 1994.
- "A Software-Oriented Approach to the Design of Media Processing Environments," D. L. Tennenhouse, J. Adam, D. Carver, H. Houh, M. Ismert, C. Lindblad, W. Stasior, D. Weatherall, D. Bacher, and T. Chang., submitted to the International Conference on Multimedia Computing and Systems, May 1994.
- "A Network Architecture for Distributed Multimedia Systems," J. F. Adam, H. H. Houh, M. Ismert, and D. L. Tennenhouse, submitted to the International Conference on Multimedia Computing and Systems, May 1994.
- "The Viewstation Collected Papers," D. L. Tennenhouse, J. Adam, C. Compton, A. Duda, D. Gifford, H. Houh, M. Ismert, C. Lindblad, W. Stasior, R. Weiss, D. Wetherall, D. Bacher, D. Carver, and T. Chang, MIT Laboratory for Computer Science Technical Report, MIT/LCS/TR-590, November 1993.
- "The Viewstation Collected Papers II," W. F. Stasior, D. L. Tennenhouse, J. F. Adam, D. R. Bacher, H. H. Houh, M. Ismert, C. J. Lindblad, B. M. Phillips, D. J. Wetherall, MIT Laboratory for Computer Science Technical Report, MIT/LCS/TR-696, April 1996.
- "A System's Perspective of the Sagnac Fiber Logic Gates and Their Possible Applications," A. Huang, N. Whitaker, C. Gabriel, H. Avramopoulos, P. M. W. French, H. H. Houh, and I. Chuang, Applied Optics, September 10, 1994
- "Complete Switching in a Three-Terminal Sagnac Switch," H. Avramopoulos, P. M. W. French, M. C. Gabriel, H. H. Houh, N. A. Whitaker, T. Morse, IEEE Phot. Tech. Lett. **3** (3), 235
- "Complete Switching in a Three-Terminal Sagnac Switch," H. Avramopoulos, P. M. W. French, M. C. Gabriel, H. H. Houh, N. A. Whitaker, IEEE/LEOS Annual Meeting, Paper PDP-13, November 1990
- "All-optical phase-locked oscillator," N. A.Whitaker, Jr., H. H. Houh, H. Avramopoulos, T. F. Morse, IEEE/LEOS Annual Meeting, Paper ELT2.4/MOO3, November 1990

Aptiv Exhibit 2001 Page 11
Microchip v. Aptiv IPR2024-00228
Apendix A

- "Passive modelocking of an all-fiber erbium laser," H. Avramopoulos, H. H. Houh, N. A. Whitaker, M. C. Gabriel, T. F. Morse, IEEE/LEOS Conference on Optical Amplifiers and their Applications, Paper PDP-8, August 1990
- "Transverse modes, waveguide dispersion, and 30ps recovery in submicron GaAs/AlAs microresonators," J. L. Jewell, S. L. McCall, A. Scherer, H. H. Houh, N. A. Whitaker, A. C. Gossard, and J. H. English, Appl. Phys. Lett. **55** (1), July 3, 1989

Aptiv Exhibit 2001 Page 12
Microchip v. Aptiv IPR2024-00228
Apendix A

Leadership, Activities and Interests

- Leadership
  - Reading Symphony Orchestra
    - Board of Directors (Treasurer), 2022 – present
  - Discovery Museums (Acton, MA)
    - Board of Directors, 2023 – present
    - Board of Directors, Development Committee, 2023 – present
    - Science and Technology Advisory Council, 2012 – present
  - Tau Beta Pi National Engineering Honor Society
    - Executive Councilor, 2024 – 2026
    - Advisor, MA B Chapter at MIT, 2003 – present
    - District Director (National Officer), Tau Beta Pi, New England Area, 1991 – 2003
    - President, MA B Chapter at MIT, Fall 1988 – Spring 1989
    - Laureate award, 1989
  - MIT Alumni Association Board of Directors
    - MIT Annual Giving Board, 3 year term, 2024 – 2027
    - National Selection Committee, 3 year term, 2020 – 2023
    - K-12 STEM Initiatives Co-chair, 2013 – 2017
    - Awards Committee Chair, 2012 – 2014
    - Awards Committee, 3 year term, 2011 – 2014
    - Vice President, 2 year term, 2004 – 2006
    - Alumni Ad-Hoc Committee, Chair, 2005-2006
    - Board Member, 2 year term, 1997 – 1999
  - MIT Club of Boston
    - Board of Directors, 2006 – 2011
    - K-12 Initiatives Chair, 2009 – 2012
    - VP of Communications, MIT Club of Boston, 2003 – 2006
    - Past-President, MIT Club of Boston, 2002 – 2003
    - President, MIT Club of Boston, 2001 – 2002
    - President-Elect, MIT Club of Boston, 2000 – 2001
    - VP of Programs, MIT Club of Boston, 1999 – 2000
    - Activities Super-Chair, MIT Club of Boston, 1998 – 1999
  - MIT Enterprise Forum of Cambridge, Inc.
    - Past Chair, 2009 – 2011
    - In-NOW-vation Co-chair, 2010
    - Chair, 2007 – 2009
    - Vice Chair, 2005 – 2007
    - Executive Board Member, 2002 – 2011
    - Winter Workshop Co-Chair, February 2007 – conceived idea for conference, which sold-out and produced largest attendance numbers in recent memory
    - Spring Workshop Co-Chair, Spring 2004
    - Membership Committee Chair, Fall 2003 - 2006
    - 25th Anniversary Dinner Chair, Fall 2003
    - As Membership Chair and Board Member, started Special Interest Groups in 2004; a SIG won the MIT Presidential Citation award, the MIT Alumni Association's highest award for organizations, in 2006

Aptiv Exhibit 2001 Page 13
Microchip v. Aptiv IPR2024-00228
Apendix A

- Estabrook Elementary School PTA
  - Advisory committee to the superintendent on PCB issue, 2010-2011
  - 4th Grade after-school science program co-organizer, 2010-2012
  - 4th and 5th Grade before-school Math Olympiad co-organizer, 2009-2013
  - 5th Grade BBQ and Yearbook Committee, 2011, 2013
  - Family Math Night volunteer, 2008-2012
- MIT Class of 1989
  - Secretary, five consecutive 5 year terms, 1989 - 2014
  - 30-year Reunion Committee, 2019
  - 25-year Reunion Committee, 2014
  - 20-year Reunion Committee and Gift Committee, 2009
  - 15-year Reunion Committee and Gift Committee, 2004
  - 10-year Reunion Committee and Gift Committee, 1999
  - 5-year Reunion Committee, 1994
  - Interim Treasurer, 1993 - 1994
  - Instituted annual senior class career fair, now raising over $100,000 annually for senior class activities, Fall 1988
- Strong, consistent record of leadership dating to high school

- Acting
  - '21' (Sony Pictures), credited as "Chinatown Dealer," 2007, Kevin Spacey's movie about the MIT Blackjack Team inspired by "Bringing Down the House" by Ben Mezrich, opened nationwide on March 28, 2008. 21 was the number one movie in US for two weeks and number one globally for one week. 21 also topped the DVD sales, Blu-ray sales and DVD rental charts.
  - Spring Lake Theater Company, first New York-area off-broadway production of "A Chorus Line," played role of Mark, Summer 1990
- Former member of the MIT Blackjack team
- Producer for 10,000 Maniacs' 2013 album "Music from the Motion Picture"
- Executive Producer for 10,000 Maniacs' 2015 album "Twice Told Tales"
- Violist, violist, harpist, guitarist, singer, actor: played in many amateur/semi-professional groups including Firebird Pops Orchestra, Reading Symphony Orchestra, MIT Summer Philharmonic Orchestra, Carlisle Chamber Orchestra, Rivers Symphony Orchestra, Opera51 Orchestra, Freisinger Chamber Orchestra, Merrimack Valley Philharmonic, Longwood Symphony, MIT Symphony, and Somerville Community Chorus
- Violist, "Coming Home" album by Karen Phillips, 2014
- Google Scholar citations: 2079, h-index: 21, i10-index: 26 (since 2017: 662/12/14)
- Erdos-Bacon number of 7
- Erdos-Bacon-Sabbath number of 11

Aptiv Exhibit 2001 Page 14
Microchip v. Aptiv IPR2024-00228
Apendix A