DocuSign Envelope ID: 572DBD26-4FF7-4FA3-B858-2C79783CD24F

IN THE UNITED STATES PATENT AND TRADEMARK OFFICE

BEFORE THE PATENT TRIAL AND APPEAL BOARD

MICROCHIP TECHNOLOGY INC.,
Petitioner,

v.

APTIV TECHNOLOGIES AG AND APTIV TECHNOLOGIES LIMITED,
Patent Owners.

Case No. IPR2024–00230
U.S. Patent No. 11,176,072

DECLARATION OF ERIC WELCH

DocuSign Envelope ID: 572DBD26-4FF7-4FA3-B858-2C79783CD24F

TABLE OF CONTENTS

I. INTRODUCTION 4

II. QUALIFICATIONS 5

III. COMPENSATION 7

IV. MATERIALS CONSIDERED 7

V. UNDERSTANDING OF THE LAW 13

A. Legal Standards 13

1. Claim Construction 13
2. Burden of Proof 14
3. Anticipation 14
4. Obviousness 14
5. Legal Standard for Invalidity Based on Written Description and Enablement Under 35 U.S.C. § 112 ¶1 17
6. Indefiniteness 19

B. Priority Date 20

C. Level of Skill in the Art 21

VI. TECHNOLOGY BACKGROUND 23

A. USB Basics 23

1. Hosts and Devices 25
2. USB Hubs 29

B. Dual-Role Products 32

1. Host/Device Detection 34
2. Routing Switches 42

C. Host-to-Host Bridges 48

D. Automotive USB Applications 49

E. USB Power Delivery Specifications 52

Microchip Ex. 1013, p. 2
Microchip v. Aptiv
IPR2024-00230

Aptiv Exhibit 2013 Page 2
Microchip v. Aptiv IPR2024-00228

DocuSign Envelope ID: 572DBD26-4FF7-4FA3-B858-2C79783CD24F

VII. THE CHALLENGED PATENTS 53

A. Summary of the Challenged Patents 54

B. File History 59

VIII. THE PRIOR ART REFERENCES 68

A. Chang Summary 68

B. Chang II Summary 71

C. Chutorash Summary 82

D. AN96527 Summary 85

IX. MOTIVATION TO MODIFY CHANG IN VIEW OF CHANG II AND THE KNOWLEDGE OF A POSITA 86

X. MOTIVIATION TO MODIFY CHANG IN VIEW OF CHANG II, CHUTORASH, AND THE KNOWLEDGE OF A POSITA 105

XI. MOTIVIATION TO MODIFY CHANG IN VIEW OF CHANG II, AN96527, AND THE KNOWLEDGE OF A POSITA 108

XII. CLAIM TERMS 111

A. "Embedded USB Host" 111

XIII. SUMMARY OF OPINIONS 112

XIV. UNPATENTABILITY ANALYSIS 113

A. Ground 1 (Claim 1): Chang in view of Chang II and the Knowledge of a POSITA Knowledge 113

1. Claim 1 113

B. Ground 2 (Claim 1): Chang in view of Chang II, Chutorash, and the Knowledge of a POSITA 143

1. Claim 1 143

C. Secondary Considerations of Nonobviousness 144

XV. CONCLUSION 154

Microchip Ex. 1013, p. 3
Microchip v. Aptiv
IPR2024-00230

Aptiv Exhibit 2013 Page 3
Microchip v. Aptiv IPR2024-00228

DocuSign Envelope ID: 572DBD26-4FF7-4FA3-B858-2C79783CD24F

I. INTRODUCTION

1. I have been retained by counsel for Microchip Technology Inc. ("Microchip" or "Petitioner") in the above-captioned matter as an independent consultant to offer opinions regarding the patentability of the claims in U.S. Patent No. 9,619,420 ("the '420 patent"), U.S. Patent No. 9,645,962 ("the '962 patent"), U.S. Patent No. 11,176,072 ("the '072 patent"), and U.S. Patent No. 11,681,643 ("the '643 patent"). Collectively, I refer to these patents as the Challenged Patents. As I discuss below, other than certain new matter in the '962 patent, the Challenged Patents share a common specification. Because of the similarities in my opinions regarding the Challenged Patents, my declarations from §§I-XII are identical, but from §XIII onward is unique to the patent for the specific petition that this declaration accompanies.

2. In the preparation of this Declaration, I have confined my analysis to the materials and opinions that were available at the time of the preparation of this Declaration. Should new materials, analyses, or opinions be introduced subsequent to the filing of this Declaration, I reserve the right to provide supplementary Declarations to the extent necessary to address any such newly introduced items.

3. If requested, I am prepared to explain (in a deposition or at a trial before the Patent Trial and Appeal Board (the "Board")) the technology disclosed in the Challenged Patents—including the state of the art in the relevant timeframe.

DocuSign Envelope ID: 572DBD26-4FF7-4FA3-B858-2C79783CD24F

Similarly, I am prepared to explain the technology disclosed in the Chang (EX1014, U.S. Patent Pub. 2006/0206650) and Chang II (EX1015, U.S. Patent Pub. 2009/0268743) references, and in any other prior art references cited herein. This may include, among other things, background information on USB technology and standards.

II. QUALIFICATIONS

4. My qualifications to testify as an expert in USB technology are set forth in my *curriculum vitae* attached as Appendix A—which includes a listing of cases in which I have provided expert testimony.

5. I am an expert with nearly 50 years of experience in the fields of electrical and software engineering, and product development for consumer, medical, industrial, aerospace, and other applications.

6. From 1976 to 2007, I was Vice President of Engineering and CTO of InnoSys Incorporated and its Keyspan division. The Keyspan division developed and marketed to the retail channel several lines of computer peripheral and communications devices such as USB adapters, computer remote control devices, USB and FireWire add on cards, and related technology. I personally designed and developed core technology for the Keyspan business, resulting in an increase in sales from less than $1MM in 1997 to $13MM in 1999.

Microchip Ex. 1013, p. 5
Microchip v. Aptiv
IPR2024-00230

Aptiv Exhibit 2013 Page 5
Microchip v. Aptiv IPR2024-00228

DocuSign Envelope ID: 572DBD26-4FF7-4FA3-B858-2C79783CD24F

7. From 2007 to the present, I have been president of Bramson Welch & Associates, Inc., an Engineering Services consultancy specializing in embedded systems, USB, Bluetooth, data communications, mobile devices, iPhone accessories, and litigation services, including data analysis and expert witness work. I serve as System Architect and Project Strategist on all Bramson Welch projects. I frequently work with multiple client groups to coordinate design and architecture across many different technical and organizational domains.

8. I have over twenty-five years of significant experience specifically with the development of USB peripherals, adapters, hosts, and special purpose devices. For example, I was responsible for the design and development of the Keyspan USB/serial adapter, the first working serial adapter for the Apple iMac in the mid-1990s, which is still shipping today. Also, for example, I was responsible for the design and development of Keyspan's network-attached host adapter, a device with an ethernet network connection and four USB Host ports. As yet other examples, while at Keyspan and later at Bramson Welch, I was responsible for the design and development of dozens of USB peripheral devices, including class device interface (*i.e.*, storage, HID, and communication adapters), and vendor-specific devices that do not fit any of the existing USB classes. I am also a senior member of the Institute of the Electrical and Electronics Engineers association (IEEE).

Microchip Ex. 1013, p. 6
Microchip v. Aptiv
IPR2024-00230

Aptiv Exhibit 2013 Page 6
Microchip v. Aptiv IPR2024-00228

DocuSign Envelope ID: 572DBD26-4FF7-4FA3-B858-2C79783CD24F

9. I also have specific experience with USB entities that can function either as a USB Host or as a USB Device, including several prominent smartphone platforms, where role detection and role switching are important features.

10. My curriculum vitae contains further details regarding my experience, education, publications, and other qualifications which allow me to render expert opinions in connection with this proceeding.

III. COMPENSATION

11. I am being compensated for my work in this matter at an hourly rate of $395 for consulting services. My compensation does not depend on the content of my opinions or the outcome of this investigation.

IV. MATERIALS CONSIDERED

12. In preparing this declaration, I reviewed and considered the following materials, along with any other materials referenced in the body of my declaration:

Exhibit	Description
1001	U.S. Patent No. 9,460,037 ("'037 patent")
1002	Patent Prosecution History for U.S. Patent No. 9,460,037
1003	U.S. Patent No. 9,619,420 ("'420 patent")
1004	Patent Prosecution History for U.S. Patent No. 9,619,420
1005	U.S. Patent No. 9,645,962 ("'962 patent")
1006	Patent Prosecution History for U.S. Patent No. 9,645,962
1007	U.S. Patent No. 10,545,899 ("'899 patent")

Microchip Ex. 1013, p. 7
Microchip v. Aptiv
IPR2024-00230

Aptiv Exhibit 2013 Page 7
Microchip v. Aptiv IPR2024-00228

DocuSign Envelope ID: 572DBD26-4FF7-4FA3-B858-2C79783CD24F

Exhibit	Description
1008	Patent Prosecution History for U.S. Patent No. 10,545,899
1009	U.S. Patent No. 11,176,072 ("'072 patent")
1010	Patent Prosecution History for U.S. Patent No. 11,176,072
1011	U.S. Patent No. 11,681,643 ("'643 patent")
1012	Patent Prosecution History for U.S. Patent No. 11,681,643
1014	U.S. Patent Publication No. 2006/0206650 ("Chang")
1015	U.S. Patent Publication No. 2009/0268743 ("Chang II")
1016	U.S. Patent Publication No. 2004/0019732 ("Overtoom")
1017	U.S. Patent Publication No. 2006/0195625 ("Hesse")
1018	*Universal Serial Bus Specification,* Revision 2.0, April 27, 2000 ("USB 2.0 Specification")
1019	*Universal Serial Bus Type-C Cable and Connector Specification*, Revision 1.2, March 25, 2016
1020	*Universal Serial Bus Power Delivery Specification*, Rev. 3.0, V1.0a, March 25, 2016
1021	*Universal Serial Bus Implementers Forum Full and Low Speed Electrical and Interoperability Compliance Test Procedure,* Revision 1.3, February 2004
1022	*On-The-Go and Embedded Host Supplement to the USB Revision 2.0 Specification,* Revision 2.0 version 1.1a, July 27, 2012 (the "OTG Supplement")
1023	*Universal Serial Bus 3.0 Specification*, Revision 1.0, November 12, 2008 ("USB 3.0 Specification")
1024	Declaration of Jeffrey L. Ravencraft re USB Specifications.
1025	U.S. Patent No. 8,683,085 ("Castleberry")

DocuSign Envelope ID: 572DBD26-4FF7-4FA3-B858-2C79783CD24F

Exhibit	Description
1029	U.S. Patent No. 8,447,598 ("Chutorash")
1030	U.S. Patent No. 8,694,803 ("Rafiee")
1031	GL620USB-A: GeneLink USB PC-to-PC Networking Controller, Specification 1.6, November 17, 2000
1032	U.S. Patent Publication No. 2008/0005262 ("Wurzburg")
1033	U.S. Patent Publication No. 2007/0255885 ("Bohm '885")
1034	U.S. Patent No. 7,162,566 ("Lin")
1035	*PL-2501 Product Brochure*, Prolific Technology Inc., September 11, 2002
1036	*NET1080 USB TurboCONNECT Preliminary Specification*, Revision 0.6, NetChip Technology, Inc., January 31, 2000
1037	*M5632 Preliminary Product Brief*, ALi Corporation, September 15, 2002
1038	U.S. Patent No. 7,085,876 ("Lai")
1039	U.S. Patent Publication No. 2009/0185559 ("Chen")
1040	U.S. Patent No. 3,916,380 ("Fletcher")
1041	U.S. Patent No. 7,057,413 ("Young")
1042	U.S. Patent Publication No. 2006/0227759 ("Bohm '759")
1043	Oral Order, dated December 19, 2017 in *Microchip Technology Incorporated v. Delphi Automotive Systems, LLC et al.*, Case No. 1:17-cv-01194-JDW (D. Del.)
1045	Aptiv Technologies Limited's Responses and Objections to Microchip Technology Inc.'s First Set of Interrogatories (Nos. 1-11), dated June 12, 2023 in *Aptiv Technologies AG, v Microchip Technology Inc.*, Case No. 1:23-cv-00307-JDW (D. Del.)

DocuSign Envelope ID: 572DBD26-4FF7-4FA3-B858-2C79783CD24F

Exhibit	Description
1046	U.S. Patent Publication No. 2007/0156293 ("Kellzi")
1047	U.S. Patent No. 7,502,878 ("Wright")
1049	*USB in Automotive: Not Just for PCs Anymore,* Brian Ellis, Cypress Semiconductor Corp., Electronic Product News, September 1, 2006
1050	*The Car Entertainment System*, Niels Koch (published as Chapter 23 in Part 5 ("Infotainment and Navigation Systems" of *New Trends and Developments in Automotive System Engineering*, Marcello Chiaberge (Editor), InTech, 2011 (2014 Reprint))
1051	*The Car Entertainment System*, Niels Koch (published as Chapter 23 in Part 5 ("Infotainment and Navigation Systems" of *New Trends and Developments in Automotive System Engineering*, Marcello Chiaberge (Editor), IntechOpen, 2011)
1052	U.S. Patent No. 9,864,711 ("Wang")
1053	U.S. Patent Publication No. 2004/0088449 ("Sakaki")
1054	*Anchor Chips Single-Chip EZ-Link (AN2720SC)*, product brochure dated November 1998
1055	*CMOS Circuit Design, Layout, and Simulation*, R. Jacob Baker, IEEE Press, 1st Edition (1998) ("Baker")
1056	Library of Congress Catalog Record for *CMOS Circuit Design, Layout, and Simulation*, R. Jacob Baker, IEEE Press, 1st Edition (1998)
1057	U.S. Copyright WebVoyage Record for *CMOS Circuit Design, Layout, and Simulation*, R. Jacob Baker, IEEE Press, 1st Edition (1998)
1058	Declaration of Mariellen F. Calter re *CMOS Circuit Design, Layout, and Simulation*, R. Jacob Baker, IEEE Press, 1st Edition (1998)

Microchip Ex. 1013, p. 10
Microchip v. Aptiv
IPR2024-00230

Aptiv Exhibit 2013 Page 10
Microchip v. Aptiv IPR2024-00228

DocuSign Envelope ID: 572DBD26-4FF7-4FA3-B858-2C79783CD24F

Exhibit	Description
1059	Fairchild Semiconductor USB Switch listing from October 16, 2011 printed from Internet Archive Wayback Machine
1060	Fairchild Semiconductor FSUSB63 3:1 High-Speed USB 2.0 Switch / Multiplexer, dated November, 2010
1061	Internet Archive Affidavit of Nathaniel E Frank-White re Exhibits 1031, 1035, 1037 and 1054
1062	Internet Archive Affidavit of Nathaniel E Frank-White re Exhibits 1036, 1049, 1050/1051, and 1058
1063	Maxim 4989 Datasheet (USB 2.0 Hi-Speed 2-of-4 Crosspoint Switch), dated August 2008
1064	Cypress Semiconductor AN96527 - Designing USB Type-C Products Using Cypress's CCG1 Controllers, dated June 3, 2015
1065	Internet Archive Affidavit of Nathaniel E Frank-White re Exhibits 1059, 1063, 1064, 1068, and 1071
1066	U.S. Patent No. 9,104,821 ("Dunstan")
1067	U.S. Patent Publication No. 2010/0265179 ("Ram")
1068	Fairchild Semiconductor FSUSB30 Low-power, Two-Port, High-Speed USB2.0 Switch, dated January 2007
1069	*The ART of Electronics*, P Horowitz and W. Hill, Cambridge University Press, 2nd Edition (1989)
1070	*Universal Serial Bus: Micro-USB Cables and Connectors Specification*, Revision 1.01, April 4, 2007
1071	Fairchild Semiconductor FSA880 / FSA881 – USB Port 2:1 Switch with Accessory and Charger Detection, dated November 2011

Microchip Ex. 1013, p. 11
Microchip v. Aptiv
IPR2024-00230

Aptiv Exhibit 2013 Page 11
Microchip v. Aptiv IPR2024-00228

DocuSign Envelope ID: 572DBD26-4FF7-4FA3-B858-2C79783CD24F

Exhibit	Description
1072	Aptiv's Supplemental Infringement Contentions (Redline), dated November 8, 2023 in *Aptiv Technologies AG, v Microchip Technology Inc.*, Case No. 1:23-cv-00307-JDW (D. Del.) [PROTECTIVE ORDER MATERIAL - FILED UNDER SEAL]
1073	Microsoft Computer Dictionary, 4th ed., Microsoft Press, 1999 ("Microsoft Dictionary")
1074	STMicrosystems, RM0033 Reference Manual, STM32F205xx, STM32F207xx, STM32F215xx and STM32F217xx advanced ARM-based 32-bit MCUs, Doc ID 15403 Rev 2, December 2010
1075	Joint Claim Construction Statement (Dkt. No. 115), dated December 6, 2023 in *Aptiv Technologies AG, v Microchip Technology Inc.*, Case No. 1:23-cv-00307-JDW (D. Del.)

13. I may use these documents and information, or other information obtained during the course of this proceeding, as well as representative charts, graphs, schematics and diagrams, animations, and models based on those documents and information, to support and to explain my testimony.

14. My opinions are based in part on a review and analysis of the above-mentioned documents and materials. I have also drawn on my education, experience, and knowledge of basic engineering and design principles in forming my opinions.

DocuSign Envelope ID: 572DBD26-4FF7-4FA3-B858-2C79783CD24F

V. UNDERSTANDING OF THE LAW

A. Legal Standards

15. I am not an attorney, but I have been informed of several legal principles, which I have employed in forming my opinions in this declaration. I have been informed that each patent claim is considered separately for purposes of patentability and that a dependent claim that depends from another claim includes all of the limitations of the claim it depends from.

1. Claim Construction

16. I have been informed that the claims of the Challenged Patent in this proceeding are to be construed using the same claim construction standard applied in district court. I have been informed the claim construction analysis begins with the ordinary meaning of a claim term, and there is a presumption that the term carries its plain and ordinary meaning to a person of ordinary skill in the art ("POSITA") as of the effective filing date of the patent. I have also been informed that the most important sources for determining the meaning of a claim term are the claims, the specification, and the prosecution history of the patent at issue, which collectively is called "intrinsic evidence." I have been further informed that the meaning of a claim term may also be guided by "extrinsic evidence," such as contemporaneous dictionaries, treatises, and industry standards, as well as the testimony of technically skilled witnesses such as myself.

Microchip Ex. 1013, p. 13
Microchip v. Aptiv
IPR2024-00230

Aptiv Exhibit 2013 Page 13
Microchip v. Aptiv IPR2024-00228

DocuSign Envelope ID: 572DBD26-4FF7-4FA3-B858-2C79783CD24F

2. Burden of Proof

17. I have been informed that the petitioner in an *inter partes* or *post grant* review bears the burden of establishing unpatentability by "a preponderance of the evidence." I have been further informed and understand that, to prove an assertion by "a preponderance of the evidence," the party with the burden of proof must demonstrate that it is more likely than not that the assertion is true.

3. Anticipation

18. I have been informed that a patent claim is unpatentable if it is "anticipated" by prior art. I have been informed that a reference anticipates a claim if the reference discloses each limitation of the claim at issue, either expressly or inherently. I have been informed that a prior art reference may anticipate a claim without disclosing a feature of the claimed invention if that missing characteristic is necessarily present, or inherent, in the single anticipating reference as would have been understood by a POSITA.

19. I have been informed that material not explicitly contained in a single prior art document may still be considered for purposes of anticipation if that material is incorporated by reference into the document.

4. Obviousness

20. I have been informed that a patent claim is unpatentable if it would have been obvious to a POSITA at the time of the claimed invention. I have been further informed that a claimed invention is not patentable if differences between it and the

Microchip Ex. 1013, p. 14
Microchip v. Aptiv
IPR2024-00230

Aptiv Exhibit 2013 Page 14
Microchip v. Aptiv IPR2024-00228

DocuSign Envelope ID: 572DBD26-4FF7-4FA3-B858-2C79783CD24F

prior art are such that the subject matter as a whole would have been obvious at the time the invention was made to a person having ordinary skill in the pertinent art. I have been informed that factors relevant to the determination of obviousness include the scope and content of the prior art, the level of ordinary skill in the art at the time of the invention, differences between the claimed invention and the prior art, and "secondary considerations" or objective indicia of nonobviousness.

21. I have been informed that a single reference alone can render a patent claim obvious, if any differences between the reference and the claim would have been known or obvious to a POSITA at the time of the invention. That is, if the POSITA could have adapted the reference to meet the claims of the patent by applying known concepts to achieve expected results, then the patent claims are rendered obvious by that reference.

22. I have been informed that the combination of familiar elements according to known methods is likely to be obvious when it does no more than yield predictable results. I have been further informed and understand that when a patent claim simply arranges old elements with each performing the same function it had been known to perform, and yields no more than one of ordinary skill would expect from such an arrangement, the combination is obvious.

23. I have been informed that a patent claim composed of several limitations is not obvious merely because each limitation was independently known

Microchip Ex. 1013, p. 15
Microchip v. Aptiv
IPR2024-00230

Aptiv Exhibit 2013 Page 15
Microchip v. Aptiv IPR2024-00228

DocuSign Envelope ID: 572DBD26-4FF7-4FA3-B858-2C79783CD24F

in the prior art. Hindsight reasoning is not an appropriate basis for combining references to form an obviousness combination. I have been further informed that it can be important to identify a reason that would have prompted a POSITA to combine multiple prior art references, or multiple teachings of the same prior art reference.

24. I have been informed that various "secondary considerations" (sometimes referred to as objective indicia of nonobviousness) may support a determination of nonobviousness and that such secondary considerations must be considered as part of an obviousness analysis. I have been informed that even strong evidence of secondary considerations may not be sufficient to rebut a strong showing of obviousness. I have been informed that the patentee bears the burden of showing the existence and effect of secondary considerations of nonobviousness, after which the burden of coming forward with rebuttal evidence shifts to the party arguing obviousness. I have been informed that the following secondary considerations may indicate nonobviousness:

25. ***Copying***: evidence that others, including the accused infringer, copied the patented invention.

26. ***Long-standing problem or need***: evidence of a persistent problem or need in the art that was resolved by the patented invention.

Microchip Ex. 1013, p. 16
Microchip v. Aptiv
IPR2024-00230

Aptiv Exhibit 2013 Page 16
Microchip v. Aptiv IPR2024-00228

DocuSign Envelope ID: 572DBD26-4FF7-4FA3-B858-2C79783CD24F

27. ***Prior failure***: evidence that others have tried and failed to solve the problem or failed to provide the need resolved by the claimed invention.

28. ***Commercial acquiescence of competitors***: the willingness of industry to license the patent at issue.

29. ***Skepticism***: evidence that those of ordinary skill in the art were skeptical as to the merits of the invention.

30. ***Praise***: evidence of praise directed to an invention by others in the field.

31. ***Unexpected results***: evidence that those of ordinary skill in the art were surprised by the capabilities of the claimed invention.

32. I have also been informed that the ***near-simultaneous invention*** by others can be evidence that a claimed invention is obvious.

33. I have further been informed that the patentee bears the burden of showing a "nexus" between the claimed invention and the evidence proffered on secondary considerations (*e.g.*, proof of commercial success of a product that practices the claimed invention is not enough; there must be evidence that the commercial success resulted, at least in part, from the claimed invention).

5. Legal Standard for Invalidity Based on Written Description and Enablement Under 35 U.S.C. § 112 ¶1

34. I understand that a patent claim is invalid for lack of written description under 35 U.S.C. § 112 ¶1 if the specification does not "*contain a written description of the invention, and of the manner and process of making and using it, in such full,*

Microchip Ex. 1013, p. 17
Microchip v. Aptiv
IPR2024-00230

Aptiv Exhibit 2013 Page 17
Microchip v. Aptiv IPR2024-00228

DocuSign Envelope ID: 572DBD26-4FF7-4FA3-B858-2C79783CD24F

clear, concise, and exact terms as to enable any person skilled in the art to which it pertains, or with which it is most nearly connected, to make and use the same."

35. This requirement has two parts: (1) the specification must describe the invention, and (2) the originally-filed specification and claims must describe the manner and process of making and using the invention.

36. I also understand that the written description must include every feature or limitation of the claimed invention.

37. I further understand that the written description must convey clearly to those skilled in the art that, as of the priority date sought, the inventor was in possession of the invention claimed.

38. I understand that, in conducting a written description analysis:

- The written description analysis is based on an objective inquiry into the four corners of the specification.
- This inquiry into the specification is done from the perspective of one of ordinary skill in the art.
- The written description requirement does not require any particular form of disclosure, and support may be based on a combination of figures and disclosures throughout the specification.

Microchip Ex. 1013, p. 18
Microchip v. Aptiv
IPR2024-00230

Aptiv Exhibit 2013 Page 18
Microchip v. Aptiv IPR2024-00228

DocuSign Envelope ID: 572DBD26-4FF7-4FA3-B858-2C79783CD24F

- The specification need not recite the claimed invention in haec verba, *i.e.*, it need not use the same words, phrasings or presentation style as the claims.
- A description that merely renders the invention obvious does not satisfy the written description requirement.
- The level of detail required to satisfy the written description requirement depends on (i) the nature and scope of the claims and (ii) the complexity and predictability of the relevant technology.
- Factors to be taken under consideration include the existing knowledge in the particular field, the extent and content of the prior art, the maturity of the science or technology, and the predictability of the aspect at issue.

39. I understand that lack of written description must be proven by clear and convincing evidence.

40. I understand that the written description requirement must be shown with respect to the full scope of the claims, *e.g.*, that the inventor had possession of the full scope of the claims.

6. Indefiniteness

41. I understand that for a patent claim to be valid under 35 U.S.C. § 112, the patent claim must particularly point out and distinctly claim the subject matter

Microchip Ex. 1013, p. 19
Microchip v. Aptiv
IPR2024-00230

Aptiv Exhibit 2013 Page 19
Microchip v. Aptiv IPR2024-00228

DocuSign Envelope ID: 572DBD26-4FF7-4FA3-B858-2C79783CD24F

which the applicant regards as his or her invention. I understand that a patent claim must be sufficiently clear that, by reading the patent claim, a POSITA of the invention is able to determine what the claim covers and what it does not cover. I understand that the standard for determining compliance is that the patent claim, read in light of the specification and the prosecution history from the perspective of one of ordinary skill in the art, must inform with reasonable certainty those of ordinary skill in the art as to the claim scope—that is, the scope of the invention. I further understand that if a patent claim does not meet this requirement, then the claim is said to be indefinite, and the claim is invalid under 35 U.S.C. § 112.

42. I am informed and understand that a claim can be found unpatentable due to the prior art (*i.e.*, anticipated or obvious) in certain circumstance even if the claim is indefinite. One example is where the outer bounds of a claim limitation are not reasonably certain, but the prior art disclosure falls within the scope of the limitation that is not subject to uncertainty.

B. Priority Date

43. I have been informed that a U.S. patent may claim "priority" to the filing date of one or more earlier filed applications. I have been informed that the priority date, also called the "effective filing date," is the earliest filing date to which a claim is entitled—and that such date is relevant for determining what qualifies as prior art. I understand that a claim must have written description support in the

DocuSign Envelope ID: 572DBD26-4FF7-4FA3-B858-2C79783CD24F

application(s) to which it claims priority to be entitled to an earlier effective filing date. I have been informed that the priority date determination is done on a claim-by-claim basis, and that claims in the same patent may have different priority dates.

44. I have been instructed to use September 26, 2013 as the priority date for all of the challenged claims of the Challenged Patents except for certain claims of the '962 patent. Specifically, for claims 11-13 and 18-19 of the '962 patent (which relate to power delivery), I have been instructed to use September 6, 2016 as the priority date.

C. Level of Skill in the Art

45. I have been informed that the level of ordinary skill in the relevant art at the time of the invention is relevant to inquiries such as the meaning of claim terms, the meaning of disclosures found in the prior art, and the reasons one of ordinary skill in the art may have for combining references.

46. I have been informed that factors that may be considered in determining the level of ordinary skill include: (1) the type of problems encountered in the art; (2) prior art solutions to those problems; (3) rapidity with which innovations are made; (4) sophistication of the technology; and (5) education level of active workers in the relevant field. I have been further informed that a POSITA is also a person of ordinary creativity.

Microchip Ex. 1013, p. 21
Microchip v. Aptiv
IPR2024-00230

Aptiv Exhibit 2013 Page 21
Microchip v. Aptiv IPR2024-00228

DocuSign Envelope ID: 572DBD26-4FF7-4FA3-B858-2C79783CD24F

47. The Challenged Patents pertain generally to the field of USB connectivity (*e.g.*, USB systems/architectures/communications), though other technical fields may be relevant. *See* EX1003 ('037 patent), 1:17-19. A POSITA at the time of the alleged invention would have been well-versed in USB standards (including the USB 2.0 and 3.0 Specifications and the OTG Supplement) and the design/deployment of USB hosts (including embedded hosts), USB devices, and USB hubs (including embedded Hubs),[1] including suitable environments for USB systems. A POSITA would also have had a working understanding of network/communication architectures (*e.g.*, client/server) and components (*e.g.*, host-to-host bridges), computer hardware and peripherals, computer programming, and the design/implementation of communication software/firmware/drivers in standard operating systems (*e.g.*, Windows, MacOS and Linux) and embedded systems. A POSITA would have had at least a four-year degree in electrical engineering, computer engineering, computer science, or a related field and four years of experience designing USB systems, including USB hosts, USB hubs, and USB devices. A relevant advanced degree may substitute for some work experience. Similarly, relevant work experience may substitute for formal education.

[1] For the '962 patent that has a later priority date, a POSITA would also have been well-versed in the USB-C Connector Specification and the USB-PD Specification.

Microchip Ex. 1013, p. 22
Microchip v. Aptiv
IPR2024-00230

Aptiv Exhibit 2013 Page 22
Microchip v. Aptiv IPR2024-00228

DocuSign Envelope ID: 572DBD26-4FF7-4FA3-B858-2C79783CD24F

48. I was at the time of the alleged invention at least a POSITA in the art relevant to the Challenged Patents. Further, based on my experience, I understand and know of the capabilities of a POSITA in 2013 (and in 2016 for certain claims of the '962 patent)—and I am familiar with how a POSITA would have understood and used the terminology found in the Challenged Patents at the time of filing, and with the state of the art at that time.

49. Even though my own experience and qualifications exceed that of a POSITA, the statements herein regarding the knowledge of a POSITA and what would have been obvious to a POSITA are from the perspective of POSITA at the relevant priority date. *See* §V.B.

VI. TECHNOLOGY BACKGROUND

50. I will first provide background on the context of the Challenged Patents. Because the specification of the Challenged Patents is written in the context of various Universal Serial Bus ("USB") specifications, standards and products that follow those standards, I provide a tutorial relating to the knowledge of a POSITA in these subject matter areas below.

A. USB Basics

51. USB ("Universal Serial Bus") has been a ubiquitous technology for connecting host computers and peripherals since the mid-1990s. It was initially conceived to improve the end user's experience by replacing and standardizing the

Microchip Ex. 1013, p. 23
Microchip v. Aptiv
IPR2024-00230

Aptiv Exhibit 2013 Page 23
Microchip v. Aptiv IPR2024-00228

DocuSign Envelope ID: 572DBD26-4FF7-4FA3-B858-2C79783CD24F

peripheral ports (*e.g.*, serial, parallel, and other ports), some of which were proprietary. Additional motivation included:

- Improve performance
- Provide power
- Reduce the number of ports
- Support hot plug and unplug
- Provide for standard and inexpensive cables

52. USB was standardized by a group (called the Promoter's Group) of major companies in the computer industry, some of whom were competitors. This was the USB-IF ("USB Implementors Forum"). The promoters were motivated by the idea that standardizing the computer/peripheral interface was in everybody's best interest, provided a high-quality user experience and importantly, left considerable room for innovation and competitive advantage. The USB 1.0 specification (January 1996) outlined the overall architecture, set out requirements for mechanical and electrical details including cables and new connectors, and defined two communication speeds: Low (1.5 Mbps (megabits per second)) and Full (12 Mbps).

53. The USB 2.0 specification was published in April of 2000, cleaned up some details, and added High Speed communications (480 Mbps). EX1018. The USB 2.0 specification clarified the practice of backwards compatibility with earlier specifications. High Speed capable devices were required to work on Full Speed

Microchip Ex. 1013, p. 24
Microchip v. Aptiv
IPR2024-00230

Aptiv Exhibit 2013 Page 24
Microchip v. Aptiv IPR2024-00228

DocuSign Envelope ID: 572DBD26-4FF7-4FA3-B858-2C79783CD24F

systems, etc. Cables that had been created in strict adherence to the 1.0 specification (not all were) would work at High Speed. Through USB 2.0 all data speeds used a single balanced wire pair (called D+ and D-), although at different voltage levels for the different speeds.

54. The USB 3.0 Specification, which was also backwards compatible with the earlier USB versions, was published in November 2008, adds higher speeds, but "*has similar architectural components as USB 2.0*." EX1023, §3.1; *see also id.*, §3 ("*USB 3.0 ... provides backward compatibility with USB 2.0*.").

1. Hosts and Devices

55. USB Products and subsystems[2] come in two types: USB Host (or just "host") and USB Device (or just "device"). In general, the host manages the connection, and it "instantiates" the device by connecting it electrically and through the software protocol stack to the rest of the system. USB devices are divided into classes (*e.g.*, mice, keyboard, game controllers, printers, storage devices, network adapters, other communication devices, vendor specific, etc.). The USB host is responsible for providing the right software device driver for the specific device. The host operating system vendor usually provides the overall control software for

[2] Some literature uses the term "device" generically, referring to products that may operate as a USB device, a USB host, or both.

Microchip Ex. 1013, p. 25
Microchip v. Aptiv
IPR2024-00230

Aptiv Exhibit 2013 Page 25
Microchip v. Aptiv IPR2024-00228

DocuSign Envelope ID: 572DBD26-4FF7-4FA3-B858-2C79783CD24F

USB and all or most of the class drivers. When communication starts, the host is responsible for both sending data to the device and "polling" the device (in USB 2.0) to query it for information. Over this framework the individual device class driver manages the communication in whatever way makes most sense for its specific requirements.

56. The USB 2.0 Specification contemplates "*only one host in any USB system*." EX1018, §4.1.1.1. In the simplest configuration (*e.g.*, without a hub, *see infra*), one USB host (*e.g.*, personal computer) connects to one USB device (*e.g.*, keyboard):

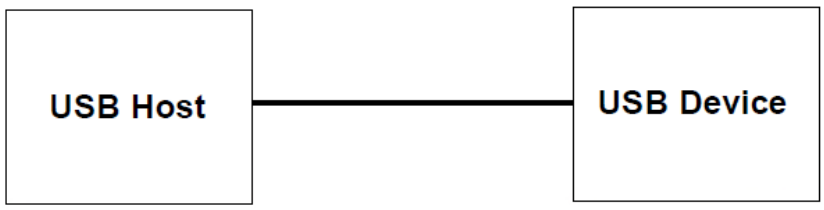

Figure 5-1. Simple USB Host/Device View

Id., Fig. 5-1.

57. Under the USB 2.0 specification (EX1018) host/device detect and connect has been designed to be simple and deterministic. The device sees the host VBUS and turns on its speed resistor (1.5k pull-up resistor). The host is not driving either data line yet and sees a positive voltage indicating a potential device connect. The host starts the "instantiation" process by first setting the bus address of the

Microchip Ex. 1013, p. 26
Microchip v. Aptiv
IPR2024-00230

Aptiv Exhibit 2013 Page 26
Microchip v. Aptiv IPR2024-00228

DocuSign Envelope ID: 572DBD26-4FF7-4FA3-B858-2C79783CD24F

device and reading the "device descriptors" to get the device Model Name, Manufacturer, serial number, and USB class and subclass, among other things. Instantiation is completed by matching a device driver (provided either by the host manufacturer (*e.g.*, Microsoft, Apple, Linux, Android, etc.) or by the device manufacturer in the case of "vendor specific" device) thereby connecting the USB device to the rest of the system as appropriate for the function of the device as provided by a combination of the device hardware and device driver.

58. Once connected a host and device can disconnect electrically without having to physically disconnect plug and receptacle. The host can disconnect by turning off VBUS and tri-stating its data lines. The device can disconnect by turning off its speed resistor.

59. With the publication of the USB OTG and Embedded Host supplement (EX1022) these processes became more generalized. VBUS is not always supplied, and even when it is it is sometimes just a logic signal indicating that that the counterpart device is connected. Also, OTG allows host and device to swap roles (but there still remains only one product as the host) such that the device instead of the host can supply VBUS. The OTG supplement generally assumes that VBUS is on during an active USB session. In practice this is not always the case, especially with dual-role devices.

Microchip Ex. 1013, p. 27
Microchip v. Aptiv
IPR2024-00230

Aptiv Exhibit 2013 Page 27
Microchip v. Aptiv IPR2024-00228

DocuSign Envelope ID: 572DBD26-4FF7-4FA3-B858-2C79783CD24F

60. The later publication of the USB 3.x, USB-PD, and USB-C specifications generalized these functions even further.

61. Well before 2013 (the priority date of the Challenged Patents), other USB configurations (with additional devices and/or hosts) were well-known. *See infra* §VI.A.2 (hubs) and §VI.C (bridges).

62. The terms "master" and "slave" are sometimes used in the technical vernacular and in some patents (*e.g.*, Chang II, *see infra*). Although these terms are not used in the USB-IF specifications, they are easily understood by POSITA: a USB host is a master and a USB device is a slave. EX1073, 3 ("*Slave*" definition: "*Any device, including a computer, that is controlled by another computer, referred to as the master*.").

63. The convention of characterizing USB communication as "commands" being sent from a host to a device or between two hosts is not uncommon and would be understood by a POSITA. However, a POSITA would have understood that at the electrical signal and "link" level, all USB communication is bidirectional. Generally, the USB host "polls" (in USB 2.0) the device endpoints and the USB device responds with either data or an indication of no data, so that every poll receives some response. At the higher protocol layers, the communication details are dictated by the class definition, for example a HID device like a keyboard mostly

Microchip Ex. 1013, p. 28
Microchip v. Aptiv
IPR2024-00230

Aptiv Exhibit 2013 Page 28
Microchip v. Aptiv IPR2024-00228

DocuSign Envelope ID: 572DBD26-4FF7-4FA3-B858-2C79783CD24F

sends data from the device to the host. A USB printer device mostly receives data from the USB host. USB comm class devices send data in both directions.

64. From its first introduction, USB power ("VBUS") was used not only to power USB devices, but also used to power and charge devices that had nothing else to do with USB. Even though this use was not explicitly covered in the original specification, the USB-IF reacted and created the first of several specifications for power and battery charging.

2. USB Hubs

65. USB hubs are fundamental to USB architecture. *See* EX1018, Chapter 11 ("*Hub Specification*"). The USB 2.0 Specification defines the term "*hub*" as a "*USB device that provides additional connections to the USB*." *Id.*, 34. A typical hub is shown below:

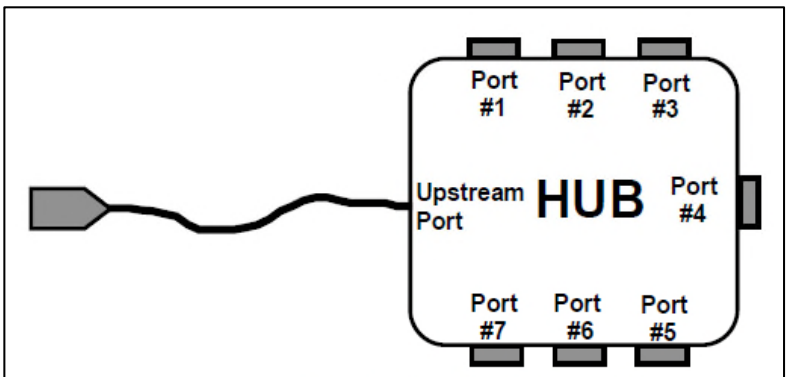

Figure 4-3. A Typical Hub

Id., Fig. 4-3. The hub's attachment points are called "ports." *Id.*, 36, 50. "*The upstream port of a hub connects the hub towards the host*." *Id.*, 50. The remaining

Microchip Ex. 1013, p. 29
Microchip v. Aptiv
IPR2024-00230

Aptiv Exhibit 2013 Page 29
Microchip v. Aptiv IPR2024-00228

DocuSign Envelope ID: 572DBD26-4FF7-4FA3-B858-2C79783CD24F

hub ports are "downstream" ports for connecting USB products. *Id.*, 33. More specifically, hubs have one upward facing port ("UFP") and two or more downward facing ports ("DFP") (shown above as Port #1-7).[3] Hubs support the simultaneous connection of multiple devices to one host. That is, "*[i]n the downstream direction, hubs operate in a broadcast mode*" (*id.,* §11.1.2.1), such that the upstream host communications are sent to all downstream ports with corresponding connections to downstream devices (*id.*). *See also id.*, 33, 38. USB 2.0 Specification Fig. 11-2 (below) shows both "downstream" (left) and "upstream" (right) communications.

66. As shown below in EX1018, Fig. 11-2 ("*Hub Signaling Connectivity*"), HUBs typically broadcast data from the UFP to the DFPs.

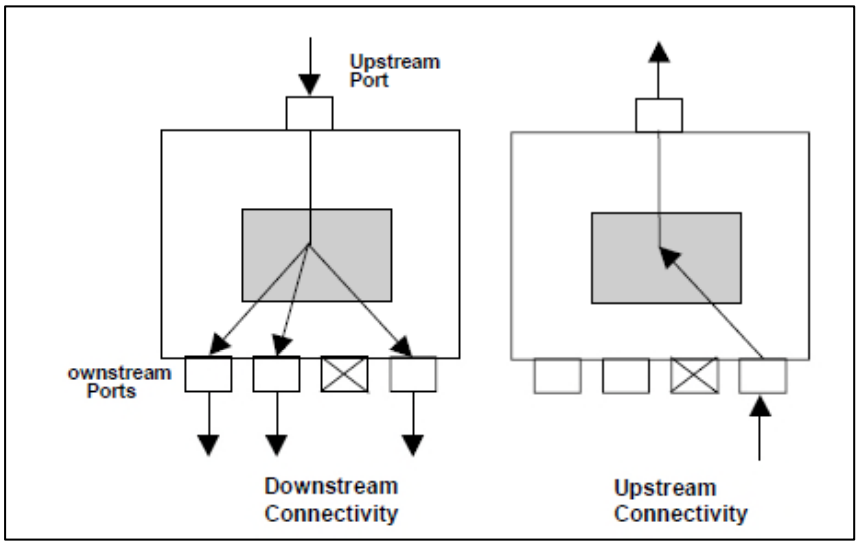

[3] In this declaration, I will often refer to these as upstream and downstream ports.

Microchip Ex. 1013, p. 30
Microchip v. Aptiv
IPR2024-00230

Aptiv Exhibit 2013 Page 30
Microchip v. Aptiv IPR2024-00228

DocuSign Envelope ID: 572DBD26-4FF7-4FA3-B858-2C79783CD24F

67. There is a special case where the UFP does not broadcast to all DFPs. Specifically, when the UFP operates at High Speed and one or more DFPs operate at full or low speed, data is not always from the UFP to the downstream DFPs that operate at different speeds. SuperSpeed Hubs don't broadcast SuperSpeed UFP data to the downstream ports.

68. Hubs can be self-powered (often with an external power brick or adapter (*i.e.*, wall wart) or battery) or bus powered (operating from the VBUS connection on the UFP). Hubs can be plugged into one another to create a complex tree with the USB host at the root and USB devices as the leaves.

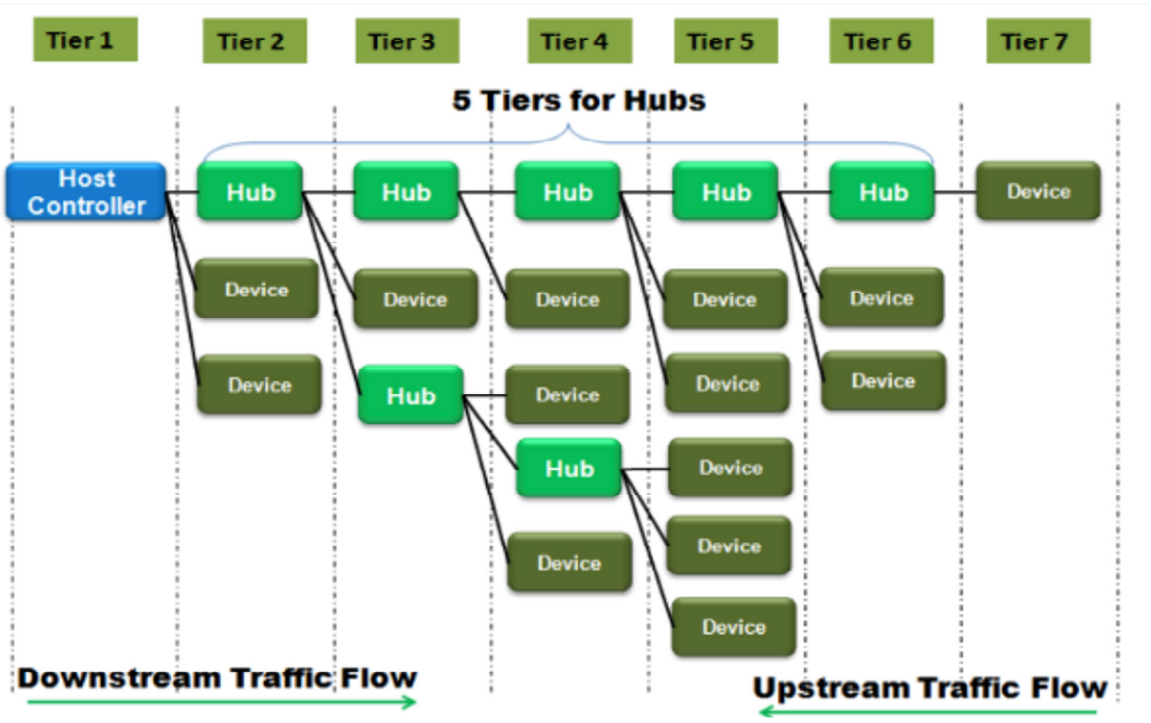

Microchip Ex. 1013, p. 31
Microchip v. Aptiv
IPR2024-00230

Aptiv Exhibit 2013 Page 31
Microchip v. Aptiv IPR2024-00228

DocuSign Envelope ID: 572DBD26-4FF7-4FA3-B858-2C79783CD24F

B. Dual-Role Products

69. The earliest versions of USB did not standardize the use of dual-role devices. EX1025 (Castleberry), 1:21-24 ("*When the USB standard was developed, it was assumed that the Host and Device functions were separate and permanent, meaning that a Host unit could never function as a Device unit and vice versa*."). The USB-IF, however, became interested in standardizing dual-role operation and developed the USB On-The-Go ("OTG") supplement (version 1.0 published in December 2001 and version 2.0 published in May 2009, EX1022), defining how two devices could connect and negotiate their individual roles between USB Host and USB Device.

70. Various Android smartphones included dual-role USB via a Micro-USB connector in the 2012-2013 timeframe. Some examples include:

- Samsung Galaxy S4 (released April 2013) (https://web.archive.org/web/20130701223742/http://www.gsmarena.com/samsung_i9500_galaxy_s4-5125.php) EX1065, 10-12;
- Nexus 7 (released July 2013) (https://web.archive.org/web/20130813011121/https://www.gsmarena.com/asus_google_nexus_7_2_2013-review-964p8.php) EX1065, 4-6; and

Microchip Ex. 1013, p. 32
Microchip v. Aptiv
IPR2024-00230

Aptiv Exhibit 2013 Page 32
Microchip v. Aptiv IPR2024-00228

DocuSign Envelope ID: 572DBD26-4FF7-4FA3-B858-2C79783CD24F

- Acer Iconia Tab A210 (released November 2012). (https://web.archive.org/web/20130620152516/http://www.gsmarena.com/acer_iconia_tab_a210-5066.php) EX1065, 7-9.

71. These devices used a mechanism taken from the OTG supplement, that of the "ID" pin on the micro-USB connector to determine the role of an attached device. The Micro-A plug has its ID pin connected to Ground and indicates that the attached is a USB Device. The Micro-B plug has its ID pin floating and indicates that the attached is a USB Host. EX1070 (USB Micro-USB Cables and Connectors Specification, Revision 1.01 April 4, 2007), 10. *See also* https://developer.android.com/develop/connectivity/usb, and https://www.javatpoint.com/android-versions.

72. Well before 2013 (the priority date of the Challenged Patents), dual-role products became ubiquitous. EX1016 (Overtoom), Abstract (discussing "*dual-role devices (OTG devices)*"); EX1032 (Wurzburg), [0007] (discussing "*dual role peripheral devices*" such as "*dual role USB printer*"), [0052] ("*dual role USB Digital Versatile Disc (DVD) read/write drive, among others*."), and [0102]; EX1033 (Bohm '885), [0040].

73. Certain consumer devices (*e.g.*, smartphones, PDAs, etc.) are not only dual role, but have the capability to switch roles dynamically. For example, EX1025 (Castleberry) explains that "*USB unit 202 can be configured to switchably alternate,*

Microchip Ex. 1013, p. 33
Microchip v. Aptiv
IPR2024-00230

Aptiv Exhibit 2013 Page 33
Microchip v. Aptiv IPR2024-00228

DocuSign Envelope ID: 572DBD26-4FF7-4FA3-B858-2C79783CD24F

in a dynamic fashion, between the Host mode and the Device mode. Such might be the case, for example, when one of the devices is a portable device, such as a PDA or hand-held device, whose role may change." 4:17-22; *see also* EX1032 (Wurzburg), [0052] (describing "*dual role peripheral device 207*" which "*may simultaneously act as a host to one or more peripheral devices and/or as slave peripheral device to a separate host*"); EX1066 (Dunstan), 5:25-28 ("*In some embodiments, the host operating as the host and the host operating as the device can be dynamically swapped using hardware and/or software at one or both of the hosts*."). The USB-IF later formalized dynamic role switching in the USB Power Delivery Specification. EX1020, §6.3.9 ("*DR_Swap Message*"). However, prior to this standard, a variety of schemes were adopted including the in-band method sending of a particular control message, or out of band schemes involving, for example, the ID signal on the Micro-USB connector. *See* ¶71 and ¶84.

1. Host/Device Detection

74. A dual-role USB product is supported by a dual-role port (*i.e.*, a port that can accept a connection to either a host or device). Having to have dedicated ports "*add[ed] overhead and increase[d] the cost associated with devices that are implemented with both Host and Device functionality*." EX1025 (Castleberry), 1:41-43. A dual-role port requires detection circuitry that determines whether the connecting product is in host or device mode. As I discuss below, this detection

Microchip Ex. 1013, p. 34
Microchip v. Aptiv
IPR2024-00230

Aptiv Exhibit 2013 Page 34
Microchip v. Aptiv IPR2024-00228

DocuSign Envelope ID: 572DBD26-4FF7-4FA3-B858-2C79783CD24F

circuitry was well known, and was available in various forms. *E.g.*, *id.*, 7:30-52 (describing various "*suitable way[s]*" to detect downstream USB products, including the monitoring of the USB data and power lines).

75. USB hosts and USB hub DFPs electrically identify themselves with 15k pull down resistors on D+ and D-. This is outlined in chapter 7 of the USB 2.0 Specification which defines electrical characteristics for host and device connections. *See* EX1018, §7.1. In particular, an upstream host must have 15kΩ pull-down resistors on the D+/D- data line. *See id.*, §7.1.1.3 ("*On downstream facing ports, R_{PD} resistors (15kΩ ±5%) must be connected from D+ and D- to ground*."); §7.1.5.1 ("*The pull-down terminators on downstream facing ports are resistors of 15 kΩ [] connected to ground*."). In contrast, a USB device must have a 1.5kΩ pull-up resistor on one terminal of the data line. *Id.* ("*Full-speed devices are terminated as shown in Figure 7-20 with the pull-up resistor on the D+ line. Low-speed devices are terminated as shown in Figure 7-21 with the pull-up resistor on the D- line*."). Fig. 7-21 is shown below, with the upstream host's 15kΩ pull-down resistors (R_{pd}) and the downstream device's 1.5kΩ pull-up resistor (R_{pu}) identified.

Microchip Ex. 1013, p. 35
Microchip v. Aptiv
IPR2024-00230

Aptiv Exhibit 2013 Page 35
Microchip v. Aptiv IPR2024-00228

DocuSign Envelope ID: 572DBD26-4FF7-4FA3-B858-2C79783CD24F

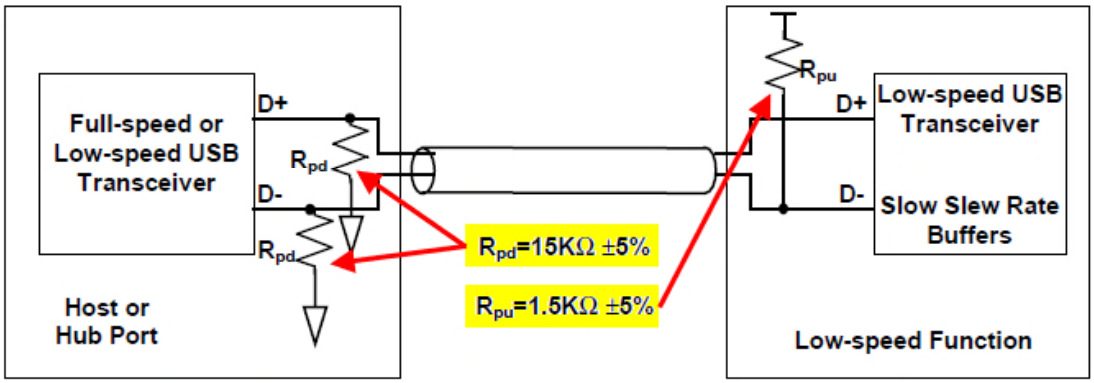

Figure 7-21. Low-speed Device Cable and Resistor Connections

EX1018, Fig. 7-21 (annotated).

76. It was well-known to POSITAs circa 2013 that detecting the presence/values of the resistors using, *e.g.*, a voltage divider, indicated whether a host or device was connected. Some examples that illustrate this are in the following paragraph.

77. *See, e.g.*, EX1042 (Bohm '759), [0006] ("*A connection between the USB device and the host may include four wires (a power line, a ground line, and a pair of data lines (D+ and D-). When a USB device connects to the host, the USB device may first pull a D+ line high (the D- line if the device is a low speed device) using a pull up resistor on the D+ line.*"); EX1025 (Castleberry), 7:30-40 ("*Step 500 determines whether a USB unit is to operate in a Host or a Device mode. This step can be performed in any suitable way. For example, ... the USB unit can passively monitor the signaling which another USB unit presents on VBUS, D+, and D- after*

Microchip Ex. 1013, p. 36
Microchip v. Aptiv
IPR2024-00230

Aptiv Exhibit 2013 Page 36
Microchip v. Aptiv IPR2024-00228

DocuSign Envelope ID: 572DBD26-4FF7-4FA3-B858-2C79783CD24F

the USB cable is connected, determine if the other USB unit is acting as a Host or Device."); EX1033 (Bohm '885), [0009] ("*In some embodiments, the USB hub may automatically detect the switching condition. For example, the USB hub may have a sensing mechanism, e.g., present in the physical layer (PHY) of connections to the USB hub, specifically for detecting the switching condition. In one embodiment, the switching condition may include a change of impedance in one or more pins of one of the connections to the USB hub, e.g., one or more of the ports. For example, in one embodiment, the invoked switching condition, e.g., via the means described above, may include a change in impedance on the D+ and D-pins of the USB cable, e.g., connected to the peripheral device that is requesting logic reversal. As a specific example, normally two of the pins in the PHY may have an impedance of 15 kOhms, and after tying, for example, two pins together, the impedance may decrease to 7.5 kOhms. Correspondingly, the USB hub may detect this change in impedance as the switching condition. Thus, the USB hub may receive input invoking a switching condition indicating a change in logic in the hub*.").

78. After VBUS is applied, USB Devices identify themselves with a "speed resistor" on D+ in the case of Full-speed and High-Speed Devices. The OTG protocol SRP (*see* ¶80) allows a USB Device to identify itself and request a connection by pulsing its speed resistor without VBUS being on.

Microchip Ex. 1013, p. 37
Microchip v. Aptiv
IPR2024-00230

Aptiv Exhibit 2013 Page 37
Microchip v. Aptiv IPR2024-00228

DocuSign Envelope ID: 572DBD26-4FF7-4FA3-B858-2C79783CD24F

79. Without OTG, a dual-role port could detect if something connected is a USB Host or a USB Device. *E.g.*, EX1032 (Wurzburg), [0005] (explaining use of data line for host/device detection). First, keeping VBUS off, the dual-role port could look for the 15k pull-down resistors of a USB Host by using a voltage divider (EX1069, 17) and measuring the voltage at the center tap with a Field Effect Transistor when the on case yields a logic true voltage, with a comparator (*id.*, 31, Fig. C, "window discriminator"), an A/D converter (*id.*, 28-30) or some other means. If it is a USB Host, then the dual role port would take the Device role and turn on its 1.5K speed resistor. If it is not a USB Host, then the dual-role port would turn on its 15k pull down resistors, turn on VBUS and check for a 1.5k speed resistor. EX1018, §7.1.5 ("*Device Speed Identification*").

80. This use of resistors can be thought of as producing signals on the data lines that a detection circuit detects. For example, Chang II discloses a "*detection unit 134*" for detecting whether the consumer product is host or device. EX1015 (Chang II), [0038]. The detection unit determines the connection of either a host or device by (1) sending an "*inquire signal*" and receiving a response (*e.g.*, sees VBUS input and/or zero on the data lines as a result of the 15k pull-downs when a host connects) or (2) receiving an "*inquire signal*" (*e.g.*, see the 1.5k pull-up resistor after applying VBUS output when a device connects). *Id.*, [0038]-[0040]. Another example of this signaling is the "*Session Request Protocol*" (SRP) under the OTG

Microchip Ex. 1013, p. 38
Microchip v. Aptiv
IPR2024-00230

Aptiv Exhibit 2013 Page 38
Microchip v. Aptiv IPR2024-00228

DocuSign Envelope ID: 572DBD26-4FF7-4FA3-B858-2C79783CD24F

Supplement (EX1022, §5.1). This is a scheme whereby an OTG B-device (the OTG term for USB device) pulses its pull-up speed resistor to indicate (*i.e.*, "*Inquire signal*") that it wants to attach as a USB Device and requesting that the host (*i.e.*, dual-role port in this context) turn on VBUS and start operation as a USB Host. While "inquire signal" is not a common term, this technique simply refers to the use of signaling, such as with pull-up or pull-down resistors.

81. With OTG, it was also well-known to POSITAs by 2013 that, in OTG implementations, the physical connector and a "ID Pin" may be used to ascertain host/device status. *See* EX1022, §4.2.4 and EX1070, 10. Additionally, with OTG, a dual-role port can determine the host or device role of the attached object in a variety of ways. Although OTG devices are supposed to use a Micro-A/B USB connector (EX1022, §3.1.1), the OTG Supplement offers a wide variety of mechanisms for Hosts and Devices, with and without power to detect one another and determine the Host/Device roles. One example is the use of the ADP protocol. *Id.*, §5.4 (Attach Detection Protocol). ADP is used when VBUS is off and works by measuring the capacitance between VBUS and ground by applying a known small voltage intermittently, measuring the VBUS voltage during the applied voltage "off" time and by counting the time required for VBUS to reach a certain voltage. The capacitance can be calculating from the RC time constant including charging voltage, the series resistance of the voltage source and the time:

Microchip Ex. 1013, p. 39
Microchip v. Aptiv
IPR2024-00230

Aptiv Exhibit 2013 Page 39
Microchip v. Aptiv IPR2024-00228

DocuSign Envelope ID: 572DBD26-4FF7-4FA3-B858-2C79783CD24F

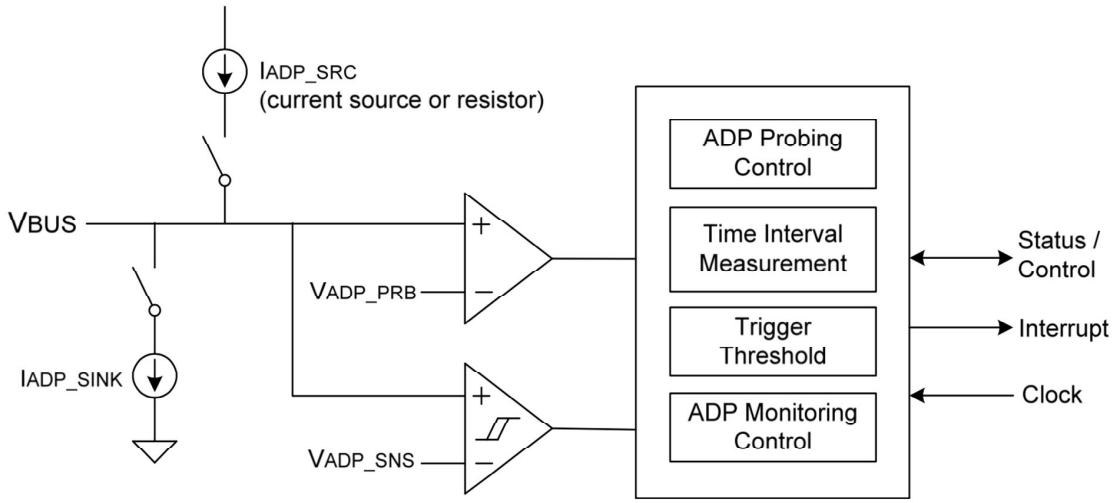

Figure 5-5: ADP Architecture

EX1069, §1.13.

82. Regardless of what connectors are used, a dual-role port could use ADP sensing/ADP probing to determine the role of the counterpart object. If ADP sensing detects ADP probing from the other side, then a Host is attached, otherwise by applying an ADP probe and measuring the capacitance and noting that downstream facing (*i.e.* Host) ports have much higher capacitance (10 uF-120 uF) as compared to Upstream (*i.e.* Device) ports with 1 uF-10 uF, the type can be determined. EX1022, §5.4 ("*Attach Detection Protocol*").

83. A POSITA would have understood that the implementation of a device type detection circuit could be done with discrete components or in an integrated circuit (IC) or System on Chip (SOC).

Microchip Ex. 1013, p. 40
Microchip v. Aptiv
IPR2024-00230

Aptiv Exhibit 2013 Page 40
Microchip v. Aptiv IPR2024-00228

DocuSign Envelope ID: 572DBD26-4FF7-4FA3-B858-2C79783CD24F

84. An in-band scheme for switching the host/device role is the USB OTG Host Negotiation Protocol (HNP). EX1022, §6.3. This mechanism defines a new USB descriptor for a USB device to opt-in to this scheme. An interrupt endpoint is dedicated to HNP status and polled periodically by the host. The device can set a bit in this periodic status message which will cause the host to suspend the bus and allow the device to take over the host role.

85. An Android product with a micro-USB connector can affect a dynamic mode switch by electrically detaching from the USB (¶58) and then changing the ID pin to the required state (floating for an attached host, ground for device) and reasserting the appropriate pull-up or pull-down resistors. If attached device is selected, Android will also turn on VBUS. *See* https://developer.android.com/develop/connectivity/usb.

86. Another example of a dual-role product is the STM32F2, a microcontroller released in 2010 by STMicrosystems. It has two USB ports each of which is dual-role and can support connection to either a host or device, with or without OTG. STMicrosystems consulted me in the design of this product. The following image is from RM0033 Reference Manual STM32F2xx, April 2011, a publicly available document from prior to 2013 that I had kept in my files.

Microchip Ex. 1013, p. 41
Microchip v. Aptiv
IPR2024-00230

Aptiv Exhibit 2013 Page 41
Microchip v. Aptiv IPR2024-00228

DocuSign Envelope ID: 572DBD26-4FF7-4FA3-B858-2C79783CD24F

29.4 OTG dual role device (DRD)

Figure 344. OTG A-B device connection

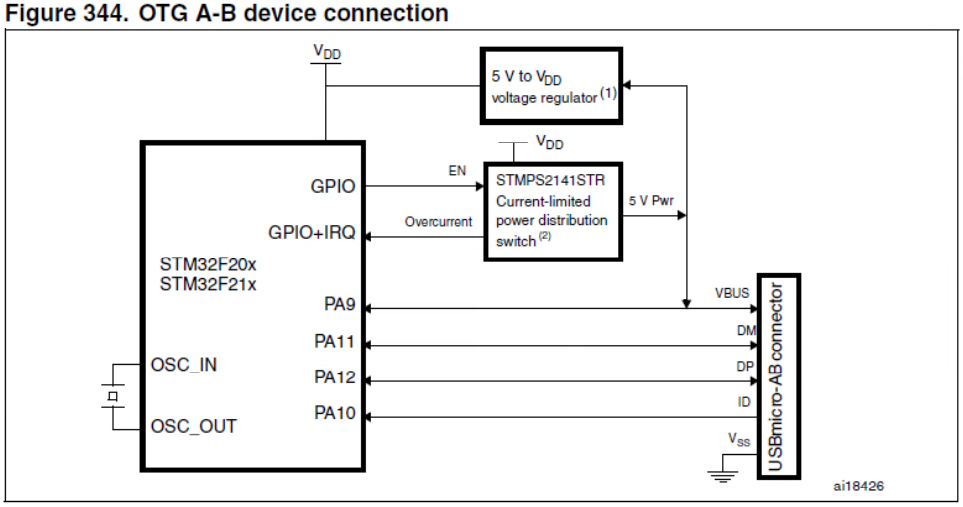

EX1074, 922.

87. As with the OTG Supplement, the STM32F2 product offered developers a wide variety of tools that can be separately selected and configured according to the product requirement. It can be used as USB device only, USB host only, it can switch host and device roles based on OTG mechanisms (HNP and SRP can be separately configured) or in-band signaling with control messages entirely under firmware control.

2. Routing Switches

88. Supporting dual-role products (particularly in the context of USB Hubs) naturally led to the use of routing switches to connect the dual-role port to the appropriate transmission path depending on whether the downstream product is operating in host or device mode (*e.g.*, as I describe in §VI.C, when the downstream

Microchip Ex. 1013, p. 42
Microchip v. Aptiv
IPR2024-00230

Aptiv Exhibit 2013 Page 42
Microchip v. Aptiv IPR2024-00228

DocuSign Envelope ID: 572DBD26-4FF7-4FA3-B858-2C79783CD24F

product is operating in host mode, the transmission path would include a host/host bridge). A POSITA would understand that using a bridge and an extra USB hub port is simpler and faster than creating a custom hub from scratch because the both the USB hub and bridge chips were commodity parts and the marginal cost of each hub port was low in comparison with the relative cost of a custom hub. Of course, in mass production, the design of a custom hub may be preferable due to smaller footprint, lower manufacturing costs, etc.

89. Routing switches, also known as routing logic (made with logic gates), have existed for many decades. *See, e.g.*, EX1040 (Fletcher). A common example is a multiplexer. These components connect particular input and output ports so that an input(s) may be routed to an output(s). For example, as shown below, a 2:1 multiplexing switch enables connecting either input "a" or "b" to output "z" via the "sel" (select) control signal.

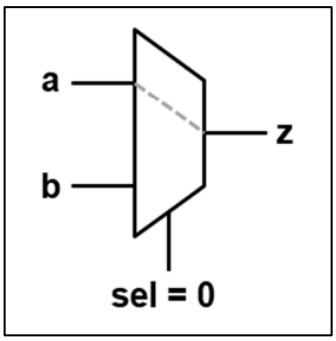

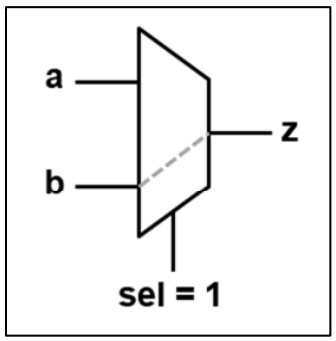

90. These switches exist as both digital and analog switches. EX1069, 21-27.

Microchip Ex. 1013, p. 43
Microchip v. Aptiv
IPR2024-00230

Aptiv Exhibit 2013 Page 43
Microchip v. Aptiv IPR2024-00228

DocuSign Envelope ID: 572DBD26-4FF7-4FA3-B858-2C79783CD24F

91. One type of well-known switch is the crossbar switch that can route any input to any output. *See, e.g.*, EX1040 (Fletcher), 4:39-5:29. An example 3x2 crossbar switch (without control logic/signals shown) is shown below:

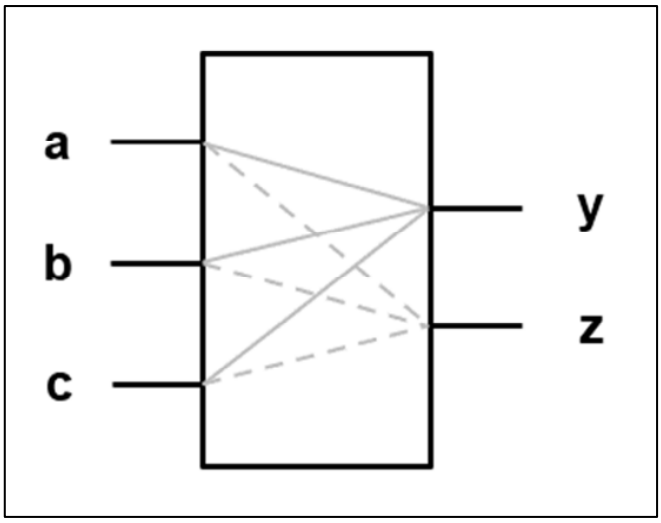

3x2 Crossbar Switch

See also EX1063 (MAX4989 commercial 2 of 4 USB crosspoint switch from Maxim Integrated Products).

92. Crossbar switches are often built from multiplexers. *See, e.g.*, EX1041 (Young), 1:31-36 ("*FIG. 2 shows a multiplexer implementation of the crossbar switch*."). Multiplexers and crossbars come in many different configurations to fit the particular application, namely, a particular number of inputs and output ports. *Id.* Routing switches were basic building blocks of logic design and were well-known and easy to implement. *Id.*; *see also id.*, 1:20-36 (crossbar switch); EX1055 (Baker), 284-288.

DocuSign Envelope ID: 572DBD26-4FF7-4FA3-B858-2C79783CD24F

93. Building on this very general purpose and widely known circuit type, companies have started to offer special purpose switches specifically for USB. *See* EX1059; EX1060; EX1063; EX1068; EX1071. The differences are that not just one signal, but two (*i.e.*, D+ and D-) have to be switched, and that impedance discontinuity is minimized across the switch. This is important at the High Speed (480 mb) data rate. An example of a USB switch is shown below:

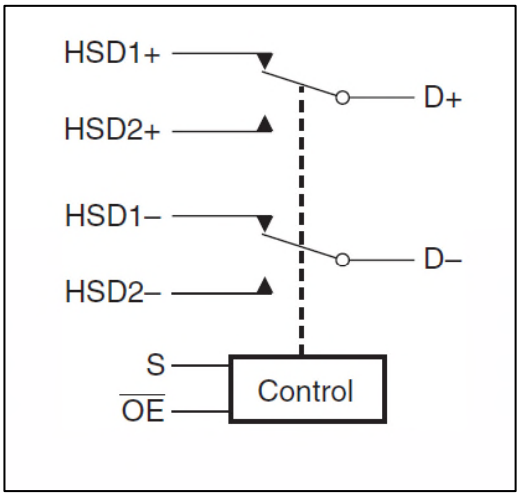

EX1068 ("*FSUSB30 Low-Power, Two-Port, High-Speed USB 2.0 (480Mbps) Switch*"); *see also* EX1060 (Fairchild FSUSB63); EX1063 (Maxim 4989 Datasheet for USB 2.0 Hi-Speed 2-of-4 Crosspoint Switch). Other examples of USB switch offerings from the well-known Fairchild Semiconductor company in 2011 are shown in EX1059.

Microchip Ex. 1013, p. 45
Microchip v. Aptiv
IPR2024-00230

Aptiv Exhibit 2013 Page 45
Microchip v. Aptiv IPR2024-00228

DocuSign Envelope ID: 572DBD26-4FF7-4FA3-B858-2C79783CD24F

94. To demonstrate how easy it is to construct a crossbar switch, I show below a simple USB 3 x 2 partial crossbar[4] design created using two USB 2:1 multiplexers. I show a 3 x 2 crossbar for illustrative purposes, but a POSITA could readily design and construct a USB crossbar with any reasonable number of input and output ports using similar components. This works because switch "OFF isolation" is approximately -40 dB which is well within the USB High Speed noise specification. In addition, these switch parts have been carefully designed and characterized to fully support the USB Specifications including USB High Speed (480 mb).

[4] In a full crossbar, every input can be routed to every output, and vice versa. The design I show is a partial crossbar because Port 1 cannot be routed to H2 in the hub, and Port 2 cannot be routed to H1 in the hub. But that does not matter in the context of the hub design shown, because each of Ports 1 and 2 can be routed through the bridge or around the bridge.

Microchip Ex. 1013, p. 46
Microchip v. Aptiv
IPR2024-00230

Aptiv Exhibit 2013 Page 46
Microchip v. Aptiv IPR2024-00228

DocuSign Envelope ID: 572DBD26-4FF7-4FA3-B858-2C79783CD24F

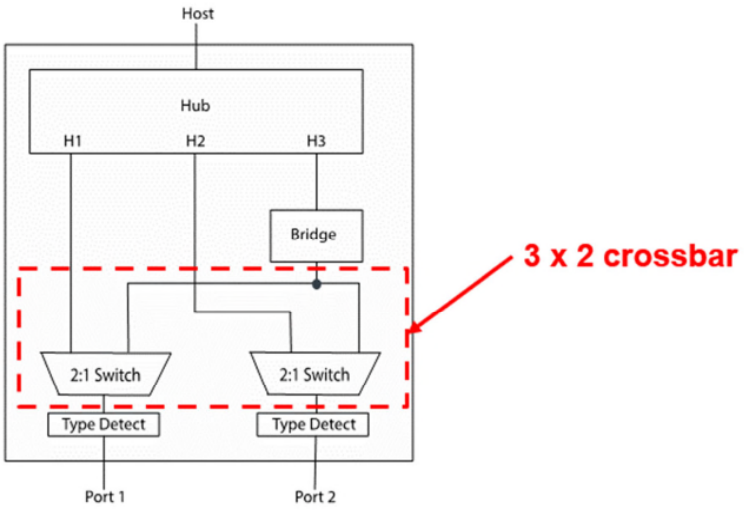

95. One notable use of routing switches was to route USB communications emanating from a USB product to the appropriate path upon detection of whether the product is operating in host or device mode. For example, Hesse discloses a crossbar switch (which Hesse also refers to as "*port router*") that routes ports (the inputs) to the appropriate "*port handler*" (the outputs) depending on whether the USB product is operating in host or device mode. EX1017 (Hesse), Fig. 6, [0056]-[0057] (port routing depending on unit's configuration). Similarly, Wang discloses a "*switching structure*" to route USB ports to the appropriate path depending on host or device detection. EX1052 (Wang), Fig. 1, 3:7-20; *see also* EX1053 (Sakaki), Fig. 1, [0031]-[0034] (switching data line connections according to detection of hot or device mode).

96. A POSITA would have understood that such a switch could easily be included and/or integrated on the same chip as other components such as a detection

Microchip Ex. 1013, p. 47
Microchip v. Aptiv
IPR2024-00230

Aptiv Exhibit 2013 Page 47
Microchip v. Aptiv IPR2024-00228

DocuSign Envelope ID: 572DBD26-4FF7-4FA3-B858-2C79783CD24F

circuit of VII.B.1. For example, as I discuss in §VIII.B, Chang II co-locates switching and detection circuitry on a common "*control chip*."

C. Host-to-Host Bridges

97. Although not specifically anticipated in the USB-IF specifications, and because end users sometimes thought of USB as a "cable replacement" technology, there was early interest in a USB product that could connect two USB hosts. For example, connecting two PCs (both being a host) to enable file transfer. *See, e.g.*, EX1034 (Lin), 5:56-59; EX1035 (commercial product brochure for connecting two hosts).

98. The effort to connect two USB hosts led to the host-to-host bridge. A bridge includes two USB device ports. Each host would connect to the device port, and the device port would present a device to the host. From the host's perspective, the host connects to a device (*e.g.*, it enumerates the device interface). The bridge then effectively transfers data between the two internal devices, allowing the hosts to transfer data (bridging the hosts). These connections comply with the USB standards because each host would use standard USB communications to its side of the bridge. *See, e.g.*, EX1035 ("*Hi-Speed USB Host to Host Bridge Controller*" featuring "*Full compliance with the USB Specification v2.0"); EX1037 ("USB2.0 Host-to-Host Networking Controller*" that is "*USB Specification revision 2.0 Compliant*"); EX1034 (Lin), 7:7-11 ("*USB ... compliant*").

Microchip Ex. 1013, p. 48
Microchip v. Aptiv
IPR2024-00230

Aptiv Exhibit 2013 Page 48
Microchip v. Aptiv IPR2024-00228

DocuSign Envelope ID: 572DBD26-4FF7-4FA3-B858-2C79783CD24F

99. Examples include the Prolific PL-2501 and Cypress EZ-Link (AN2720SC), both of which implement comm class NDIS. *See* EX1035, EX1054. Often these devices implemented one of the USB comm class interfaces, thus making the interface look like a serial cable or an ethernet cable. The "far side" of these types of interfaces were originally designed to terminate in a physical serial or network connector.

D. Automotive USB Applications

100. USB has been used in a wide variety of environments beyond the original computer host and peripheral. Use cases include automotive entertainment, airplane cockpits, the local environment of a high precision surveyor, a high-end recording studio, a bird watcher up a tree, and so on. Types of devices included (by 2013) computer keyboards and mice, printers, disk, thumb drive and CD/DVD drives, GPS receivers, audio headsets, chargers, fans, video devices, etc. As the USB 3.0 Specification stated in 2008, "*USB is the most successful PC peripheral interconnect ever defined and it has migrated heavily into the [consumer electronics] and Mobile segments*." EX1023, §1.1. And "*USB has gone beyond just being a way to connect peripherals to PCs*," with devices like PDAs and smartphones acting as hosts. *Id*. More generally, by 2008, the USB protocol was even "*being picked up and used in many nontraditional applications*." *Id*.

Microchip Ex. 1013, p. 49
Microchip v. Aptiv
IPR2024-00230

Aptiv Exhibit 2013 Page 49
Microchip v. Aptiv IPR2024-00228

DocuSign Envelope ID: 572DBD26-4FF7-4FA3-B858-2C79783CD24F

101. USB came to be used in automotive applications for several reasons, including (1) the car's electrical system was a natural fit for USB and could easily provide charging power for portable devices, (2) car navigation and other systems could take advantage of GPS transceiver in a smartphone, and (3) songs on a smartphone could be played through the car audio system.

102. Well before 2013 (the priority date of the Challenged Patents), vehicles often included USB-compatible embedded host computers in the form of infotainment systems. *See, e.g.*, EX1029 (Chutorash), Figs. 1, 3, and 27-30; 1:20-25, 14:40-53, and 27:4-55. These infotainment systems are effectively computers. Thus, connecting downstream USB devices to such an infotainment system was well developed and understood. And well before 2013, numerous portable consumer products (like GPS/navigation, smartphones, and media players) with USB ports were being used. *Id.* Thus, USB connectively was a natural fit for vehicle systems. By way of another example, a 2006 article titled "*USB In Automotive: No Longer Just For PCs*" explained that because "*the car has become a PC on wheels*" and "*consumer electronics are PC dependent*," employing USB in the automobile will avoid "*reinvent[ing] the wheel*." EX1049, 1. The article states that USB hosts can be located in "*either the portable consumer device or the infotainment system*." *Id.* Such vehicle deployments were "*scalab[e]*" and "*straight forward and easy to implement*." EX1050, 19. Scalable refers to the fact that it is simple to increase the

DocuSign Envelope ID: 572DBD26-4FF7-4FA3-B858-2C79783CD24F

size of the system, *e.g.*, adding a downstream hub to increase the number of downstream available ports.

103. By 2013, USB deployments in vehicles were common, including using hubs to increase the available downstream ports. For example, by 2002, USB hubs were already used in automobile entertainment systems. *See* EX1016 (Overtoom), Title, Abstract, and Fig. 1 (describing a "*Dual-Role Compatible USB Hub*" for "*vehicle entertainment systems*").

104. U.S. Patent No. 8,447,598 ("Chutorash," EX1029) (discussed *infra* §VIII.C) provides a discussion of a USB deployment in a vehicle. Chutorash discloses a "*vehicle control system 106 (e.g., media system ...)*" shown in Figs. 1 and 3 below, *i.e.*, an infotainment system. EX1029 (Chutorash), 5:31-33. Chutorash's vehicle control system includes "*a USB connector or interface 2728, 2744*" that is "*within vehicle 100*" for connecting "*mobile phone 2734*," "*PDA 2746*," "*media player 2752*," etc. to an "*embedded host*." *Id.*, 27:4-29; *see also* Fig. 27.

Microchip Ex. 1013, p. 51
Microchip v. Aptiv
IPR2024-00230

Aptiv Exhibit 2013 Page 51
Microchip v. Aptiv IPR2024-00228

DocuSign Envelope ID: 572DBD26-4FF7-4FA3-B858-2C79783CD24F

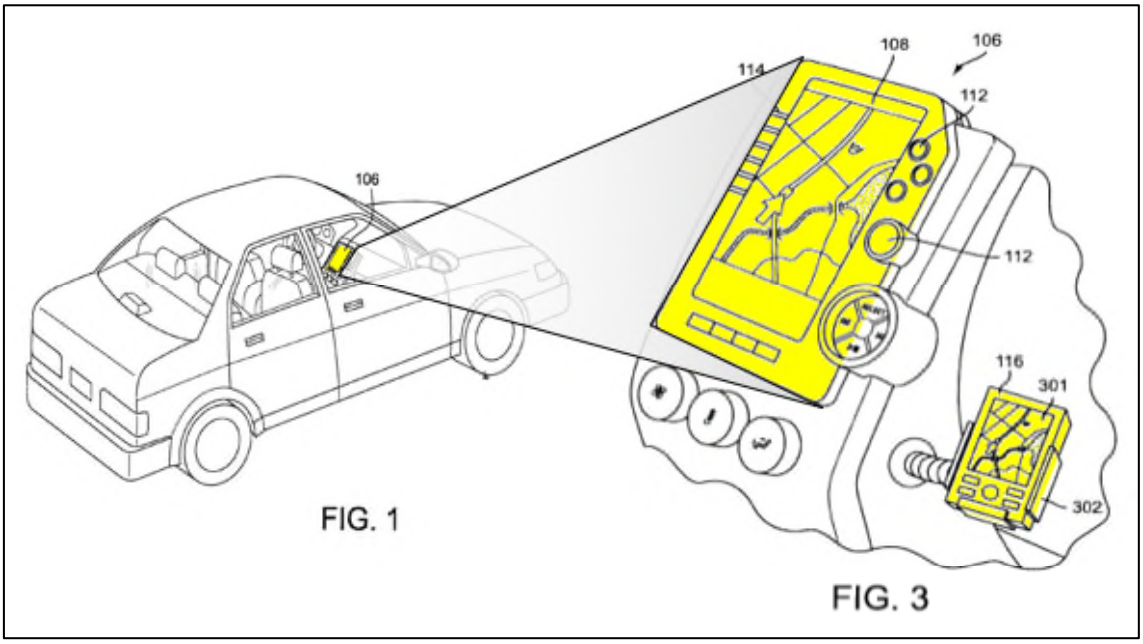

E. USB Power Delivery Specifications

105. The '962 patent cites "*USB Power Delivery Specification Rev. 3.0 v1.0 published Mar. 25, 2106 [sic] by the USB Implementer's Forum, Inc*." and "*USB Type-C Cable and Connector Specification, Revision 1.2 published Mar. 25, 2106 [sic] by the USB Implementer's Forum, Inc*." EX1005, 10:36-57.

106. The USB PD Specification Revision 1.0 was published on July 5, 2012, Revision 2.0 on August 11, 2014 (on the same day as the first USB-C specification) and Revision 3.0 on December 11, 2015. EX1020, 13. It established an entirely new scheme for USB power management, tied (as of R2.0) to the USB-C connector. With this new scheme, devices had a new way (beyond OTG) to negotiate Host and Device roles and additionally to negotiate separately about Source and Sink power roles. Traditionally USB power was always five volts, was initially limited to 0.5A,

DocuSign Envelope ID: 572DBD26-4FF7-4FA3-B858-2C79783CD24F

and gradually expanded to 1.5A or more. Under USB PD, higher voltages and currents could be negotiated, up to 20V @ 5A or up to 100W.

107. The USB-C connector specification Revision 1.0 was published on August 11, 2014. EX1019, 14. This new connector supported all previous signaling schemes (USB 2.0 single twisted pair and USB 3.0 two additional twisted pairs), provided the same connector for both ends of a cable and allowed that connector to be plugged into its associated receptacle in either orientation. It also provided some new signals (CC1 and CC2) for detecting cable orientation and for a new communication scheme where each side could exchange information and control messages about power and role (*i.e.*, host and device).

VII. THE CHALLENGED PATENTS

108. The Challenged Patents include the ’962, ’072, ’420, and ’643 patents. Each of these patents includes a common specification except for the ’962 patent, which includes additional material (*see* below). For convenience, I will refer to the specification of the Challenged Patents as being the common subject matter among these four patents, and specifically refer to the new subject matter in the ’962 patent where appropriate.

109. The ’962 patent is a continuation-in-part patent titled “*Flexible Mobile Device Connectivity to Automotive Systems with USB Hubs*” and was filed September 6, 2016. EX1005. The ’962 patent claims priority to September 26, 2013

Microchip Ex. 1013, p. 53
Microchip v. Aptiv
IPR2024-00230

Aptiv Exhibit 2013 Page 53
Microchip v. Aptiv IPR2024-00228

DocuSign Envelope ID: 572DBD26-4FF7-4FA3-B858-2C79783CD24F

(which I understand is the priority date except for the new matter). The '962 patent contains 19 claims. The new matter includes Figs. 9-10 and accompanying discussion related to power delivery capabilities in a "*USB hub power module*." *See id.*, Figs. 9-10, 10:36-11:9. This new matter is relevant to claims 11-13 and 18-19.

110. The '072 patent is titled "*Flexible Mobile Device Connectivity to Automotive Systems with USB Hubs*" and claims priority to September 26, 2013. EX1009. The '072 patent contains a single claim.

111. The '420 patent is titled "*Flexible Mobile Device Connectivity to Automotive Systems with USB Hubs*" and claims priority to September 26, 2013. EX1003. The '420 patent contains 20 claims.

112. The '643 patent is titled "*Flexible Mobile Device Connectivity to Automotive Systems with USB Hubs*" and claims priority to September 26, 2013. EX1011. The '643 patent contains 15 claims.

A. Summary of the Challenged Patents

113. The specification of the Challenged Patents includes a "BACKGROUND" section (including Figs. 1-3) that summarizes some of the basic

Microchip Ex. 1013, p. 54
Microchip v. Aptiv
IPR2024-00230

Aptiv Exhibit 2013 Page 54
Microchip v. Aptiv IPR2024-00228

DocuSign Envelope ID: 572DBD26-4FF7-4FA3-B858-2C79783CD24F

USB functionality from the USB 2.0 Specification.[5] For example, the specification describes the connection of a "*USB Host or master*" to "*a USB Device or slave*." EX1003, 1:33-38. The specification also describes "*use of USB Hubs*" to "*allow a single USB Host to connect to multiple USB Devices over a single cable*." *Id*., 1:66-2:2.

114. The specification also discusses the OTG Supplement, which provides "*dual-role*" functionality, where a USB product can "*act as either USB Host or USB Device*." EX1003, 3:17-23. With respect to smartphones in particular, the specification states that it is "*not surprising*" that "*system level design thinking has shifted towards viewing smart phones as the USB Host*" because "*this is exactly how laptops and PCs work today*." *Id*., 2:62-66.

115. The specification alleges that in the context of an application using a hub (*e.g.*, an automobile deployment), traditional "*USB Hubs do not support OTG*" and cannot support a downstream host, *e.g.*, a smartphone acting as a host. EX1003, 3:28-29. The specification discounts "*custom USB hubs*" that support OTG because these custom USB hub perform a host/device role swap that disconnects "*all other*

[5] The Challenged Patents share a common specification, with the exception of the '962 patent which add some new matter. For consistency, I cite to the '420 patent unless otherwise noted.

Microchip Ex. 1013, p. 55
Microchip v. Aptiv
IPR2024-00230

Aptiv Exhibit 2013 Page 55
Microchip v. Aptiv IPR2024-00228

DocuSign Envelope ID: 572DBD26-4FF7-4FA3-B858-2C79783CD24F

downstream ports of the USB Hub[]." *Id*., 3:46-67. This refers to when the downstream USB product acts as a host, the upstream host swaps to being in device mode, and the upstream host (now a device) no longer has connection to other downstream USB products. Simply put, the upstream host is no longer a host, and thus cannot connect to other downstream devices.

116. The Challenged Patents' alleged novelty is shown in Fig. 4. In particular, the specification discloses adding two components (a host-to-host bridge and a routing switch) to a traditional USB hub. *See, e.g*., EX1003, 5:21-24, 5:46-6:63. The USB host-to-host bridge and switching components were well-known. The bridge enables a host-to-host connection through the hub. *Id*., 6:5-10. The upstream host may connect through the hub because the bridge has a device interface, and thus the connection through the bridge appears as a standard host-to-device connection. The switch provides a bypass route. *Id.*, 6:5-13. Because consumer products may be dual-role, this switch enables bypassing the bridge when the downstream product is in device mode. *Id*.

117. The bridge and switch enable dual-role downstream smartphones to connect to the embedded upstream host[6] as device or host. *See, e.g.*, EX1003, 6:5-

[6] As the '420 patent describes, the "head unit" refers to an upstream host in a vehicle. *See, e.g.*, EX1003, 5:53-58.

DocuSign Envelope ID: 572DBD26-4FF7-4FA3-B858-2C79783CD24F

13. When the downstream "*consumer device is acting as USB Host, the USB Bridge processes the USB packets from the consumer port … thereby rendering the consumer device compatible with the vehicle's embedded USB Host*." *Id*., 6:5-10. When the downstream "*consumer device is acting as USB Device, … the switching device provides the USB signaling directly to the USB Hub, bypassing the Bridge*." *Id*., 6:10-13.

118. The communication paths are illustrated in annotated versions of Fig. 4 below for the two cases where the downstream product, *e.g.*, a smartphone, is operating in device and host mode. The purple arrows show the path taken when the smartphone mode is in device mode, and the red arrows show the host mode path.

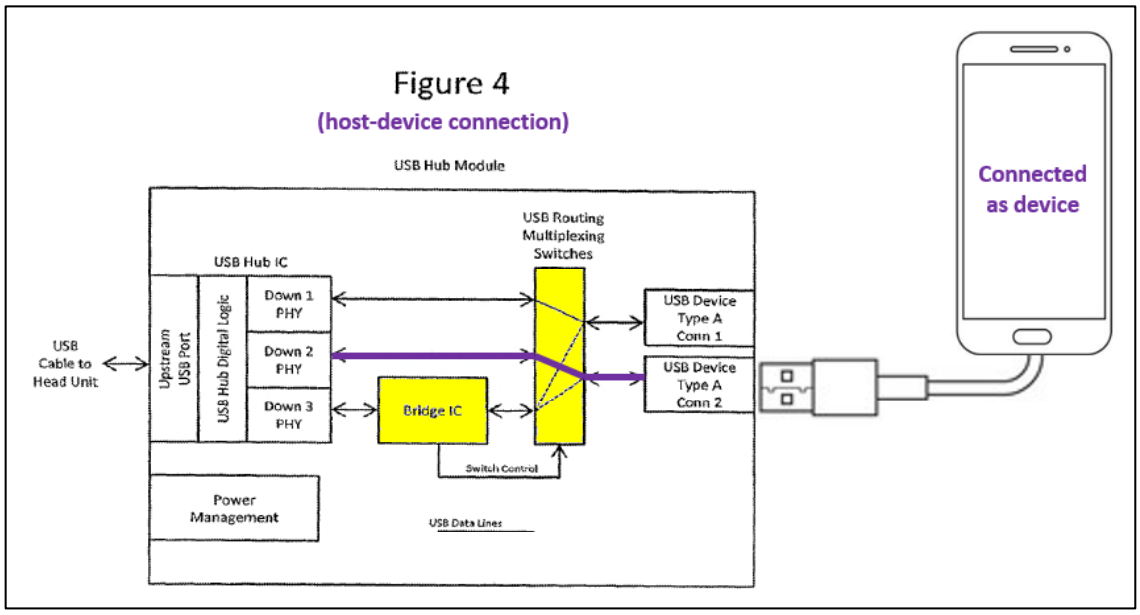

Microchip Ex. 1013, p. 57
Microchip v. Aptiv
IPR2024-00230

Aptiv Exhibit 2013 Page 57
Microchip v. Aptiv IPR2024-00228

DocuSign Envelope ID: 572DBD26-4FF7-4FA3-B858-2C79783CD24F

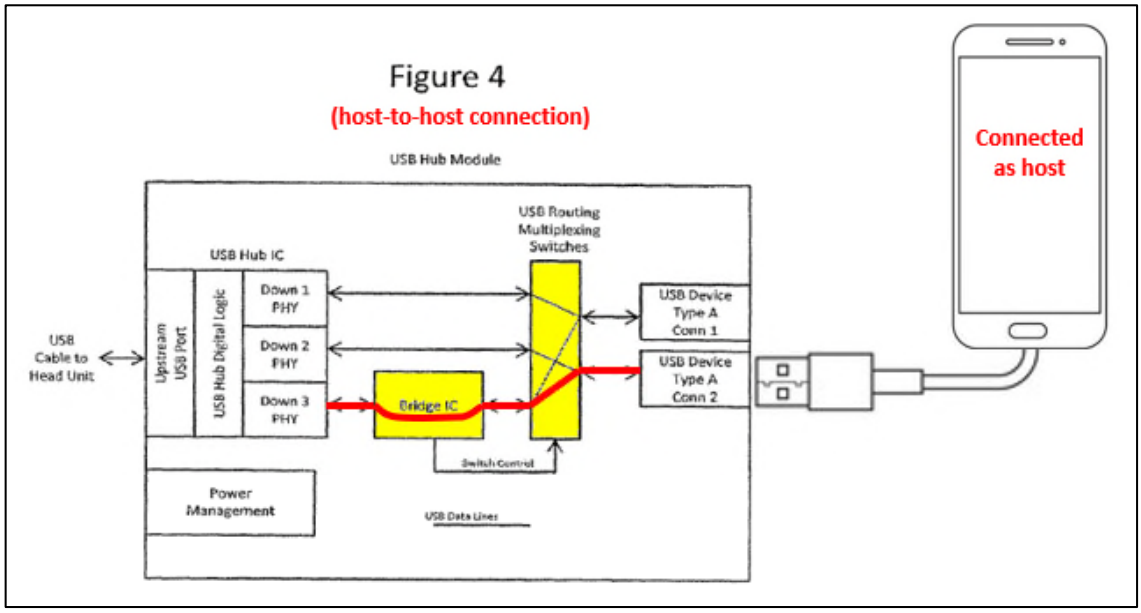

119. Fig. 5 is an alternate embodiment with a similar architecture. The primary difference between Figs. 4 and 5 is that in the Fig. 5 embodiment, the "*USB routing/switching logic and a USB Bridge are integrated with a USB Hub in a combination USB Hub/USB Bridge Integrated Circuit (IC)*." EX1003, 5:27-29; *see also id.*, 7:11-17.

120. Figs. 6-7 provide additional details regarding Fig. 5. EX1003, 5:30-33 and 7:18-8:38. These figures illustrate the device interfaces of the bridge.

121. Fig. 8 shows "*a Head Unit Software Architecture*." EX1003, 5:34-35 and 8:39-9:9. This figure illustrates that a head unit (namely, a head unit of a vehicle) connects to the hub's upstream port.

122. The Challenged Patents do not disclaim use of downstream dual-role OTG devices. That is, while the Challenged Patent criticize the use of OTG device

DocuSign Envelope ID: 572DBD26-4FF7-4FA3-B858-2C79783CD24F

swapping such that the upstream host becomes a device, it does not disclaim the use of downstream OTG products that may operate in host or device mode. For example, the Challenged Patents only states that the "*embedded USB host*" lacks "*On the Go (OTG) capability*." EX1003, 1:17-24.

123. The '962 patent includes new matter that is not in the specification of the other Challenged Patents. This new matter is Figs. 9-10 and accompanying text. The new matter describes "*USB hub power module[s]*" that admittedly is "*described [in] USB Power Delivery Specification Rev. 3.0 v1.0 … [and] USB Type-C Cable and Connector Specification, Revision 1.2 published Mar. 25, 2106 [sic] by [USB-IF]*" (*see* EX1020 and EX1019). EX1005, 10:36-47; *see also id.*, 6:48-51 and 10:36-11:9. The new matter discloses that the hub modules may "*include[] adjustable voltage power supplies 938, power control logic circuits 940 to facilitate handshaking over the CC1 and CC2 pins, and a communication control stack that is integral to the logic circuits*." *Id.*, 10:47-53. In short, the new matter relates to the hub and downstream product being able to negotiate the power that the hub will provide to the downstream product.

B. File History

124. In this section, I describe the file histories of each patent in the family of the Challenged Patents. As part of my review of the file histories, I was asked to opine on (1) whether there were any rejections of pending claims that are based on

Microchip Ex. 1013, p. 59
Microchip v. Aptiv
IPR2024-00230

Aptiv Exhibit 2013 Page 59
Microchip v. Aptiv IPR2024-00228

DocuSign Envelope ID: 572DBD26-4FF7-4FA3-B858-2C79783CD24F

prior art that is substantially the same as Chang or Chang II, and (2) whether any arguments made by the Examiner are substantially the same as that of Chang in view of Chang II and the knowledge of a POSITA (and other grounds that include these references) render the claims of the Challenged Patent obvious. As I describe below, it is my opinion the answer is no to each question.

U.S. Pat. 9,460,037

125. The claims of the '037 patent application were rejected over two primary references: Kellzi (U.S. Pub. 2007/0156293, EX1046) and Bohm '759 (U.S. Pub. 2006/0227759, EX1042). *See generally* EX1002. Neither of these references is substantially the same as Chang or Chang II.

126. The Examiner issued an anticipation rejection over Kellzi. EX1002, 76. In response, Applicant amended the claims to require a bridge that establishes a host-to-host connection. *Id.*, 98. Applicant also argued that Kellzi did not anticipate due to Kellzi's OTG implementation for several reasons:

- lacked an "embedded host";
- lacked a host-to-host connection; and
- had limited connection and port swapping capabilities where "there is an intervening hub."

Microchip Ex. 1013, p. 60
Microchip v. Aptiv
IPR2024-00230

Aptiv Exhibit 2013 Page 60
Microchip v. Aptiv IPR2024-00228

DocuSign Envelope ID: 572DBD26-4FF7-4FA3-B858-2C79783CD24F

See id., 104-108. Note that with an upstream OTG controller, as in Kellzi, there would be role "swapping" that the specification of the Challenged Patents discourages. Kellzi is not substantially the same as Chang or Chang II.

127. Then, the Examiner issued anticipation and obviousness rejections based on Bohm '759. EX1002, 115. Bohm '759 is not substantially the same as Chang or Chang II.

128. The Applicant argued that the Examiner's reading of Bohm '759 was "*not logical*" because components such as Hub Controller 203 (the alleged bridge shown in yellow below) could not be inside the hub and "*separate elements ... interconnected to the [hub]*." EX1002, 163.

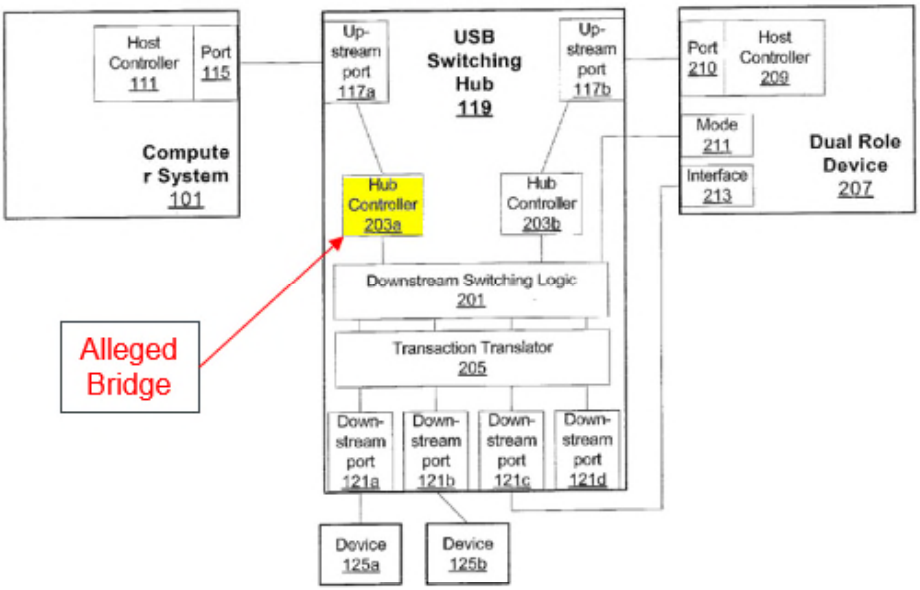

EX1042 (Bohm '759), Fig. 3 (annotated).

Microchip Ex. 1013, p. 61
Microchip v. Aptiv
IPR2024-00230

Aptiv Exhibit 2013 Page 61
Microchip v. Aptiv IPR2024-00228

DocuSign Envelope ID: 572DBD26-4FF7-4FA3-B858-2C79783CD24F

129. An Examiner Interview, Examiner Amendment, and Notice of Allowance followed. EX1002, 185-197. I discuss the amendment with respect to two changes to the claims.

130. First, with Applicant's consent, Examiner amended claim 1 to require the hub to "*connect the embedded USB Host system to a second USB Host*." *Id.*, 190-191; *see also* EX1042 (Bohm '759), [0038]. In other words, the amendment requires a host-to-host connection. As can be seen in the above figure, Bohm '759 does not support host-to-host connections, as there is no bridge (the upstream hosts only connect to downstream devices and do not connect to each other).

131. Second, the Examiner amended claim 1 to require "*broadcast[ing] data from the embedded USB Host system to each USB Port in the plurality of USB Ports*." EX1002, 190-191. As shown below, this amendment distinguishes the configuration of Bohm '759 as shown in Figs. 4a-b because each upstream host broadcasts to specific downstream ports. *See* EX1042 (Bohm '759), Fig. 4a-b and [0040]-[0042].

Microchip Ex. 1013, p. 62
Microchip v. Aptiv
IPR2024-00230

Aptiv Exhibit 2013 Page 62
Microchip v. Aptiv IPR2024-00228

DocuSign Envelope ID: 572DBD26-4FF7-4FA3-B858-2C79783CD24F

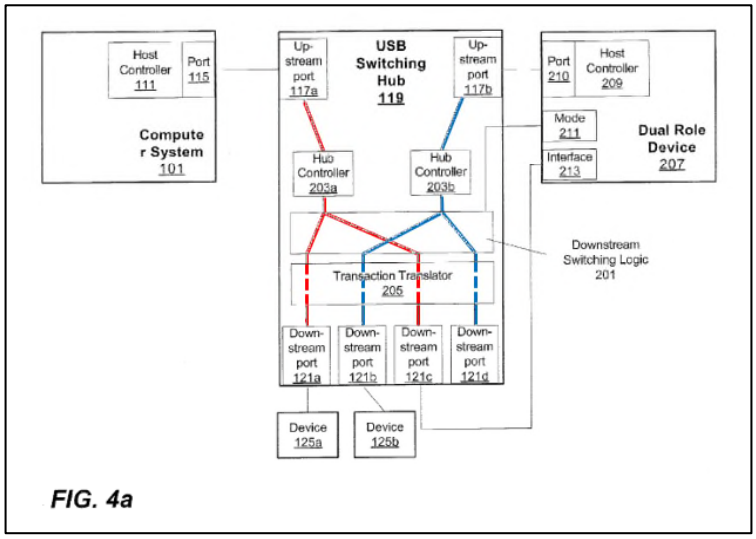

FIG. 4a

U.S. Pat. 9,619,420

132. There were no prior art rejections, and the claims issued with an Examiner Amendment following an Examiner Interview. *See* EX1004, 146-156.

U.S. Pat. 9,645,962

133. There were no prior art rejections. *See* EX1006.

U.S. Pat. 10,545,899

134. The '899 patent application was rejected over U.S. Pat. 7,502,878 ("Wright," EX1047). EX1008, 401. Applicant amended claim 1 to require (among other things) "*a USB bridge interconnected to the USB hub, and a USB routing switch interconnected to the USB bridge, the USB hub, and the second USB port*." *Id.*, 454. Applicant argued Wright lacked a bridge. Specifically, Applicant argued that "*hub logic 38*" (which the Examiner argued was a bridge) is not a bridge because "*hub logic 38*" is a conventional hub. *Id.*, 460.

DocuSign Envelope ID: 572DBD26-4FF7-4FA3-B858-2C79783CD24F

135. Examiner again rejected the claims over Wright. Here, the Examiner defined the hub functionally, asserting that Wright discloses a bridge because its "*hub logic 38 ... performs the same claimed bypass function as claimed 'USB bridge' ....* *If claimed '**USB bridge'** is a specific 'bridge', the specifics have to be recited*." EX1008, 466 (emphasis in original).

136. Applicant then made significant claim amendments, including defining the bridge as connecting two hosts (EX1008, 488) and argued Wright does not disclose "*a USB bridge interconnected to the USB hub and configured to connect the USB host to a second USB host*." *Id.*, 493.

137. In an Examiner Interview, Applicant "*described the invention as a hub to dynamically switch a device connection between USB Device mode and USB host mode when desired*." EX1008, 498. The Examiner allowed the claims, noting that the prior art does not disclose the claim language. *Id.*, 523.

138. Wright is not substantially the same as Chang or Chang II. I discuss Wright further below. Wright does not disclose a bridge for host-to-host communication.

U.S. Pat. 11,176,072

139. The '072 patent application was filed with 11 claims, but only claim 1 ultimately issued. EX1010, 372-373, 274. Thus, I will describe the file history with respect to claim 1.

DocuSign Envelope ID: 572DBD26-4FF7-4FA3-B858-2C79783CD24F

140. The Examiner rejected claim 1 as anticipated by Wright and objected because the "mode change" language was unclear. EX1010, 274-281. Applicant substantially amended claim 1 (similar to its current form) in a Supplemental Amendment and Response to expressly recite "host" and "device" modes (where device mode signals "*bypass[ed] the USB Bridge*"). *Id.*, 352.

141. As shown below, the Examiner's anticipation rejection was based on mapping Wright's "*multiplexer 36*" to the claimed bridge and "*hub logic 38*" to the claimed USB hub. EX1010, 356.

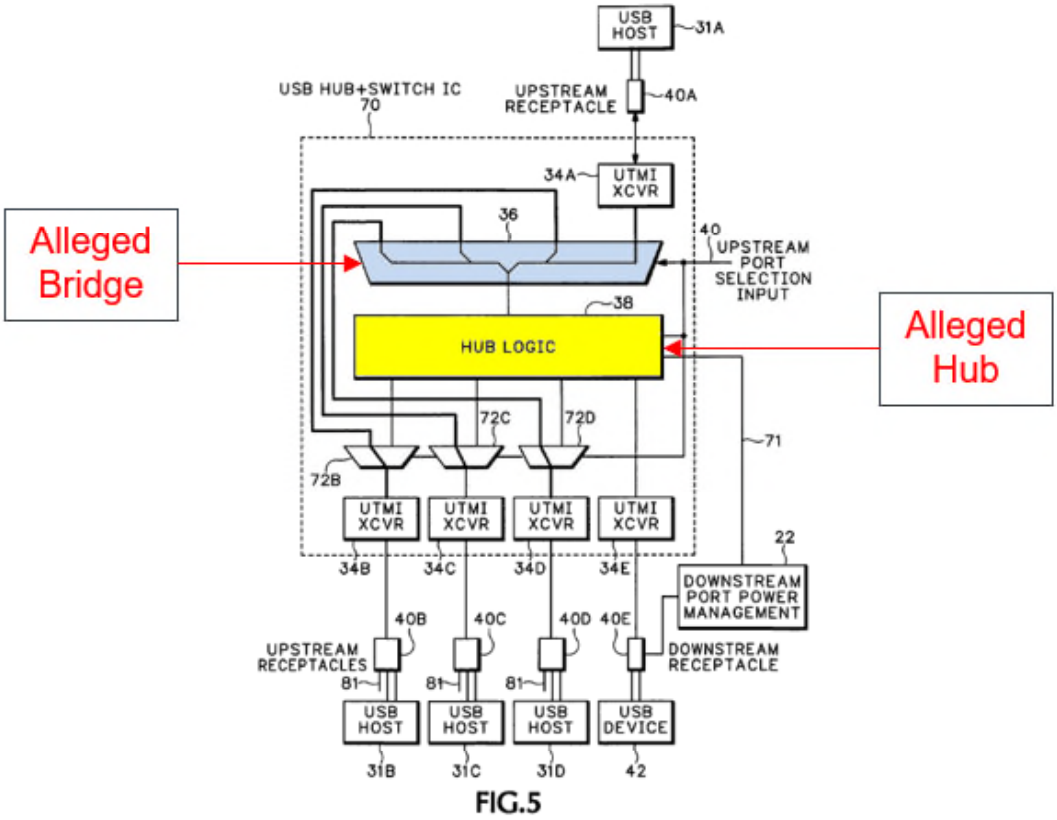

FIG.5

EX1047 (Wright), Fig. 5 (annotated).

DocuSign Envelope ID: 572DBD26-4FF7-4FA3-B858-2C79783CD24F

142. Applicant argued two distinctions over Wright: (1) Wright's alleged host-to-host communications (between hosts 31A and 31B) bypassed the hub entirely; and (2) Wright's host-to-device communications passed through the bridge instead of bypassing it. EX1010, 356. The Examiner allowed the claims following an Examiner Interview and minor clarifying amendments. *Id.*, 371-376.

143. Notably, Wright ***does not*** disclose a host-to-host connection. This is plainly clear from the fact that Wright discloses no bridge for such a connection, as well as other details. A multiplexer is not a bridge and only routes inputs to outputs. Regardless, as Applicant points out, the alleged host-to-host connection bypasses the hub and the alleged host-to-device communication passes through the alleged bridge.

U.S. Pat. 11,681,643

144. The Examiner issued a rejection over Wright, this time contending Wright's "*mux 36*" was the claimed hub and "*connection 74*" (*i.e.*, the wire between mux 36 and mux 72B) was the claimed USB bridge. EX1012, 67.

Microchip Ex. 1013, p. 66
Microchip v. Aptiv
IPR2024-00230

Aptiv Exhibit 2013 Page 66
Microchip v. Aptiv IPR2024-00228

DocuSign Envelope ID: 572DBD26-4FF7-4FA3-B858-2C79783CD24F

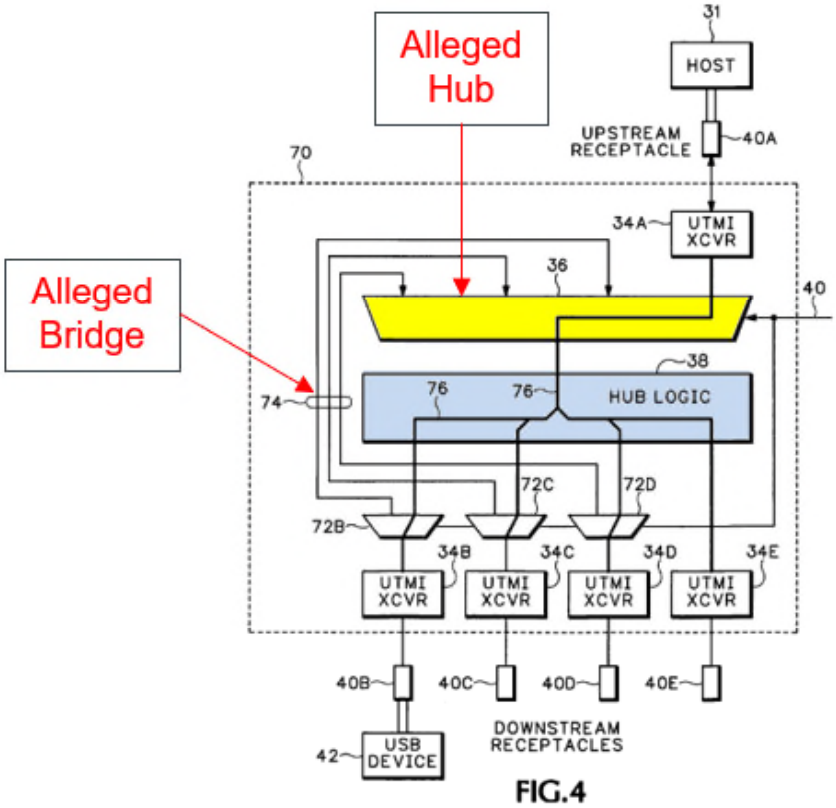

EX1047 (Wright), Fig. 4 (annotated). Applicant argued that "*multiplexer 36 of Wright cannot be fairly characterized as a USB hub*." *See* EX1012, 89.

145. Following an Examiner Interview and Examiner Amendment, namely, that the "*USB bridge includes a bridge controller, buffers, and a plurality of ports*," the claims were allowed. EX1012, 102-110.

146. Again, Wright is not substantially the same as, much less similar to, Chang or Chang II. A "mux" (which merely routes inputs to outputs) is not a hub. *See* §§VI.B.2 and VI.A.2 (describing multiplexers and hubs, respectively). The wire certainly is not a bridge (which connects two host by, *e.g.*, using to device

Microchip Ex. 1013, p. 67
Microchip v. Aptiv
IPR2024-00230

Aptiv Exhibit 2013 Page 67
Microchip v. Aptiv IPR2024-00228

DocuSign Envelope ID: 572DBD26-4FF7-4FA3-B858-2C79783CD24F

interfaces). *See* §VI.C. And again, Wright ***does not*** disclose a host-to-host connection.

147. I understand that the Applicant disclosed Chang II along with other references to the Examiner. EX1012, 175, 180. Following another Examiner Interview, Examiner Amendment, and Notice of Allowance, the '643 patent issued. *Id.*, 197, 208. The amendments add that routing occurs via a "*routing logic circuit connected directly to a USB bridge*," the USB hub is "*connected to the USB bridge*," and "*the USB hub and USB bridge have different components and functionality*." *Id.*, 201-208. To the extent that the Examiner was considering Chang II specifically, the obviousness grounds of Chang in view of Chang II does not rely on any alleged hub in Chang II, and thus whatever the Examiner may have been considering when viewing Chang II is different than the obvious grounds upon which I opine herein.

VIII. THE PRIOR ART REFERENCES

A. Chang Summary

148. Chang is titled "*Hub with a Host-to-Host Transmission Function*." The "*SUMMARY OF THE INVENTION*" explains that "*host-to-host transmission*" is accomplished via "***a bridge connected between the host port and hub control unit*** *for the first and second hosts to communicate with each other.*" EX1014 (Chang), [0005] (emphasis added). Chang does not detail the operation of the bridge. This is because Chang recognizes the "*host-to-host transmission mechanism [viz., USB*

Microchip Ex. 1013, p. 68
Microchip v. Aptiv
IPR2024-00230

Aptiv Exhibit 2013 Page 68
Microchip v. Aptiv IPR2024-00228

DocuSign Envelope ID: 572DBD26-4FF7-4FA3-B858-2C79783CD24F

bridge] is a prior art," and for that reason "*is not described in detail*." *Id*., [0020]; *see also id.*, [0022] ("*conventional bridge*"); [0020] (The OTi2108 commercial chip). Chang cites an example commercial bridge chip. *Id.*

149. Fig. 3 of Chang illustrates how Chang creates a host-to-host connection through a hub, namely, by including a bridge 52 (which has a device interface) below Hub Control Unit 46. Chang explains that Fig. 3 "*shows a hub 40 ..., which has, as a conventional hub, an uplink port 42 for being linked to a host, several downlink ports 44 for being linked to devices, and a hub control unit 46 for establishing several transmission paths 48 between the uplink port 42 and downlink ports 44*." EX1014 (Chang), [0019].

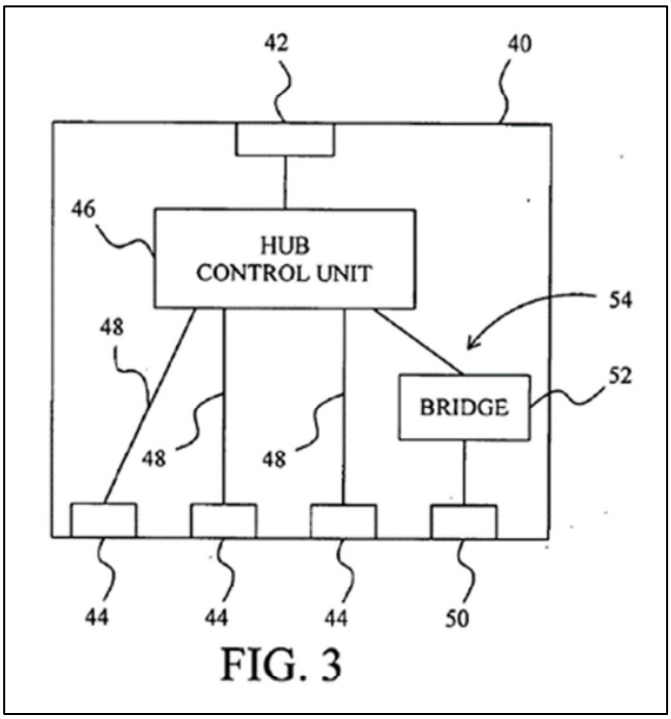

FIG. 3

Id., Fig. 3.

Microchip Ex. 1013, p. 69
Microchip v. Aptiv
IPR2024-00230

Aptiv Exhibit 2013 Page 69
Microchip v. Aptiv IPR2024-00228

DocuSign Envelope ID: 572DBD26-4FF7-4FA3-B858-2C79783CD24F

150. As shown above, hub 40 includes "*host port 50 for being linked to a host, and a bridge 52 connected between the hub control unit 46 and host port 50*" where "*[t]he bridge 52 provides a function for host-to-host communications*." EX1014, (Chang), [0020]. That is, downstream ports 44 are dedicated device ports and downstream port 50 is a dedicated host port.

151. Consistent with conventional hubs, the uplink port "*link[s] to a host*," and "*several transmission paths may be established*" so the uplink port "*can communicate with each downlink port.*" EX1014 (Chang), [0018]. This refers to the typical common function of a USB hub.

152. Chang further teaches that its "*invention can be implemented merely by integrating or adding a bridge to a USB hub, and thus does not require too many modifications on the current hub control unit. Therefore, the derived cost is relatively low, while a multi-functional USB hub with a host-to-host transmission function is obtained*." EX1014 (Chang), [0024]. Additionally, Chang teaches that the bridge may be a discrete component (as shown in Fig. 3) or integrated with other circuity comprising the hub. *See id*., [0022]. In other words, Chang recognizes, as a POSITA would, that there are several available alternatives for incorporating the bridge into the above USB system.

Microchip Ex. 1013, p. 70
Microchip v. Aptiv
IPR2024-00230

Aptiv Exhibit 2013 Page 70
Microchip v. Aptiv IPR2024-00228

DocuSign Envelope ID: 572DBD26-4FF7-4FA3-B858-2C79783CD24F

B. Chang II Summary

153. Chang II is titled "*Data Transmission Bridge Device and Control Chip Thereof for Transmitting Data*." As its title suggests, Chang II relates to "*a bridge device for transmitting data; and more particular[ly] to a data transmission bridge device and control chip thereof for transmitting data that adopts USB specification, and can utilize switching to bridge between two host devices for transmitting data*." EX1015 (Chang II), [0002]. As I describe in §VI.C, USB Host-to-Host bridges are compliant with the USB specification.

154. Recall that Chang has dedicated host and device ports. In contrast, Chang II discloses a single port that allows a connected USB product to act either as a "*Second Host Device*" or a "*Slave Device*" (*see* ¶62 on the term "*slave*") when communicating with a "*First Host Device.*" *See* EX1015 (Chang II), [0030] ("*In practical design, the second connection interface 12 can also directly adopt an A-Type male connector and a B-Type male connector of USB specification to achieve dual connector type design*"); *see also id.* [0012] ("*the second connection interface is for connecting to a second host device or a slave device*.").[7]

[7] A POSITA would have understood (and certainly found it obvious) that connecting a dual-role product to the second interface was within Chang II's disclosure.

Microchip Ex. 1013, p. 71
Microchip v. Aptiv
IPR2024-00230

Aptiv Exhibit 2013 Page 71
Microchip v. Aptiv IPR2024-00228

DocuSign Envelope ID: 572DBD26-4FF7-4FA3-B858-2C79783CD24F

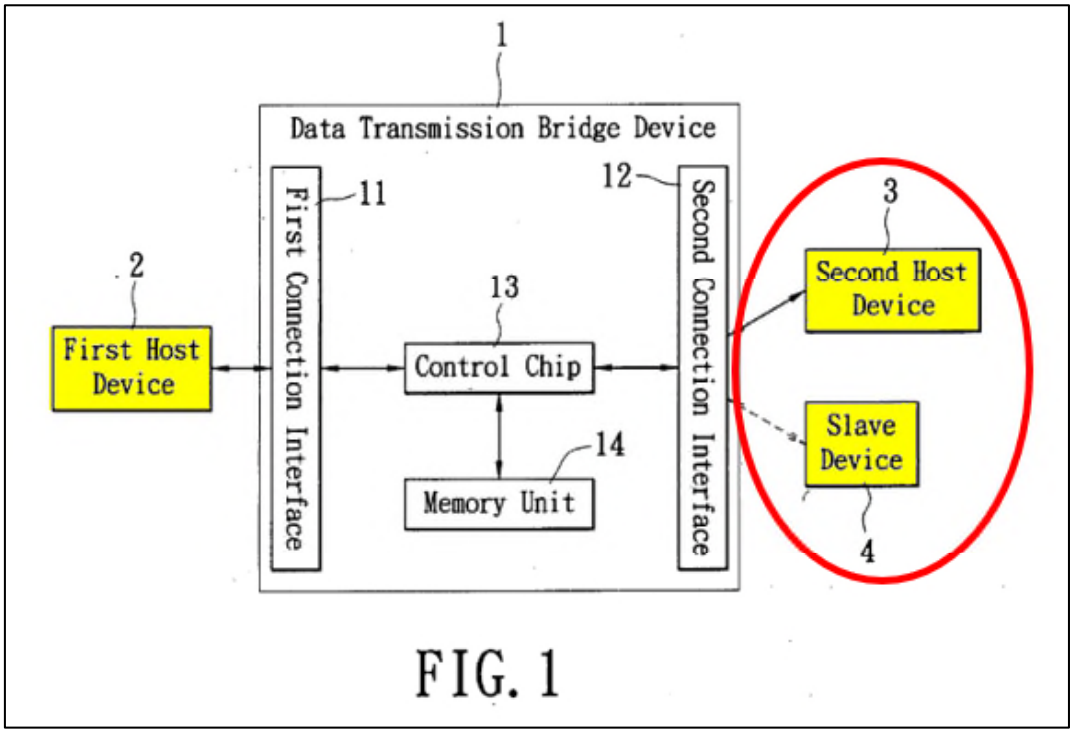

Id., Fig. 1 (annotated).

155. The single port that can accept either a device or host is also shown by viewing Figs. 1 and 2 together. Fig. 1 depicts the control chip as 13 and second connection interface as 12. As can be seen in Fig. 2, there are only two data lines (D+ and D- comprising the balanced USB data lines for a single port connection) between the control chip 13 and second interface 12 (DM_B and DP_B).

156. The "*data transmission bridge device ... automatically detect[s] the connecting device type and accordingly switch[es] between different transmission paths, which would not only allow for support of data transfer between a host device and a slave device, but also can directly support data transfer between two host*

Microchip Ex. 1013, p. 72
Microchip v. Aptiv
IPR2024-00230

Aptiv Exhibit 2013 Page 72
Microchip v. Aptiv IPR2024-00228

DocuSign Envelope ID: 572DBD26-4FF7-4FA3-B858-2C79783CD24F

devices, … [and] is suitable for simple 'plug and play.'" EX1015 (Chang II), [0011]. I discuss in more detail how this detection occurs below.

157. Various embodiments of Chang II contemplate connecting a dedicated host product or dedicated device product to the second interface. Chang II also discloses, however, that "*other combinations and other connector types are too numerous to list, but those connector types covered under USB specification is all within the scope of the present invention*." EX1015 (Chang II), [0030]. One well-known connector type that this would include is the "Micro-AB" connector (and other known connectors) that accepted host, device, and/or dual-mode products. EX1022, 13 (OTG product "*provides both host and peripheral capabilities over a single Micro-AB receptacle*"). Thus, a POSITA would have understood (and certainly found it obvious) that connecting dual-role products to the second interface was within the scope of Chang II's disclosure. This is consistent with Chang II's overall disclosures including "*automatically detect[ing] the connecting device type*," that supports a dual-role product that dynamically switches between modes. EX1015 (Chang II), [0011].

158. The bridge is primarily implemented in control chip 13, as detailed in Fig. 5, reproduced with highlights below. Fig. 5 is "*a schematic diagram for a control chip for a data transmission bridge device ….*" EX1015 (Chang II), [0019]. "*As the figure shows, the present embodiment provides a control chip 13 for a data*

Microchip Ex. 1013, p. 73
Microchip v. Aptiv
IPR2024-00230

Aptiv Exhibit 2013 Page 73
Microchip v. Aptiv IPR2024-00228

DocuSign Envelope ID: 572DBD26-4FF7-4FA3-B858-2C79783CD24F

transmission bridge device 1, which includes: a first USB controller 131, a second USB controller 132, ***a bypass circuit unit 133, a detection unit 134****, a central processing unit (CPU) 135, and a buffer unit 136*." *Id.*, [0034] (emphasis added).

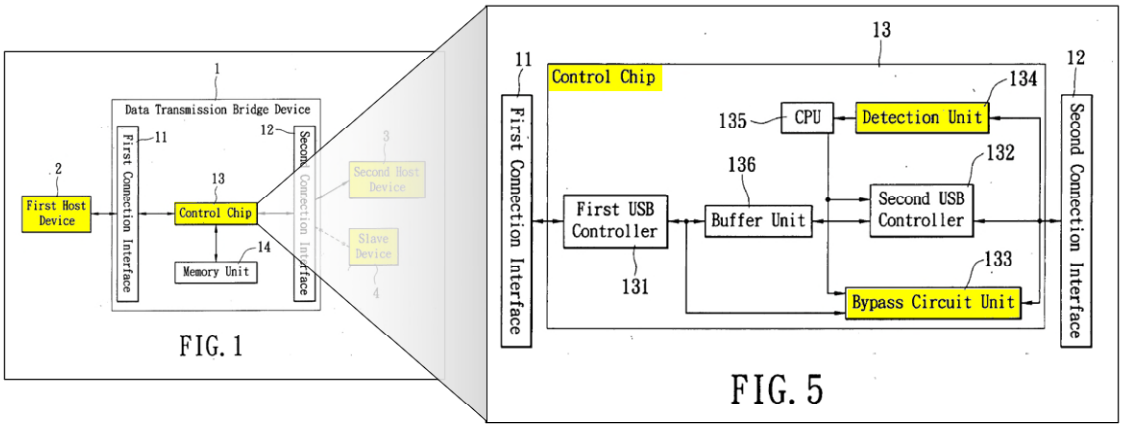

Id., Figs. 1, 5 (annotated).

159. ***Host/Device Detection***. As highlighted in Fig. 5 above, Chang II discloses a "*Detection Unit 134*." EX1015 (Chang II), [0038]-[0040], Fig. 6. "*The detection unit 134 … will automatically operate to switch between [states] … to determine the type of device currently connected*." *Id.,* [0038]; *see also id.*, [0028]. Chang II discloses that "*[f]or those skilled in the art of USB devices it is common knowledge*" to use an "*inquire signal*" to determine whether a connected USB product is a host or device. *Id.*, [0025]-[0027]. In view of the discussion at [0025]-[0027] and [0038]-[0040], a POSITA would have understood that this involves detecting the presence/values of resistors or other detection schemes as discussed *supra* §VI.B.1. More specifically, the detection unit detects the connection of a host

Microchip Ex. 1013, p. 74
Microchip v. Aptiv
IPR2024-00230

Aptiv Exhibit 2013 Page 74
Microchip v. Aptiv IPR2024-00228

DocuSign Envelope ID: 572DBD26-4FF7-4FA3-B858-2C79783CD24F

or device by (1) sending an "*inquire signal*" and receiving a response (when a host connects) or (2) receiving an "*inquire signal*" (when a device connects). EX1015 (Chang II), [0038]-[0040]. The detection unit then produces either a "*bridging detection signal*" (after detecting a host) or "*slave detection signal*" (after detecting a device). *Id.* These signals cause the switching to the appropriate transmission "*path*" (to use the bridge or bypass the bridge). *Id.*, [0042]-[0044]. That is, "*the control chip 13 can respectively switch to the bridge transmission path or the bypass path*." *Id.*, [0024]. A POSITA would have understood that an obvious implementation of Chang II's "*virtual slave state*," "*virtual host state*," "*inquire signal*," and "*inquire response*" is the combination of the USB Speed resistor on one of the data lines in a device, and the corresponding pull-down resistors and transactions on the data lines in a host that are the initiation of normal USB communication.

160. ***Switching Between Two Transmission Paths***. Chang II discloses "*a data transmission bridge*" that includes "***two different transmission paths, so that by automatically detecting the type of device connected (host or slave) the present invention can switch to the proper transmission path****, thus not only can host-slave operation between the host device and the slave device be supported, but direct bridging between two host device[s] for data transfer is also possible*." EX1015 (Chang II), [0021] (emphasis added).

Microchip Ex. 1013, p. 75
Microchip v. Aptiv
IPR2024-00230

Aptiv Exhibit 2013 Page 75
Microchip v. Aptiv IPR2024-00228

DocuSign Envelope ID: 572DBD26-4FF7-4FA3-B858-2C79783CD24F

161. The "*two transmission paths*" are (1) "*a bridge transmission path*" and (2) "*a bypass path*." EX1015 (Chang II), [0024]. These two transmission paths (shown with red lines for bridge and purple for bypass) are illustrated in annotated Figs. 1 and 5 below. The "*first path is the bridge transmission path which spans first connection interface 11, first USB controller 131, buffer unit 136, second USB controller 132, and second connection interface 12*." *Id*., [0023]. As shown below, "*when the second connection interface is connected to a second host device, the second USB controller would also connect with the second host device through the second connection interface*" which "*form[s] a bridge for data transfer between the second host device and the first USB controller*." *Id*., [0013]. The second USB controller 132 is central to creating the host-to-host bridge and would be understood to function as a device interface for the second host (*see* § VI.B).

Microchip Ex. 1013, p. 76
Microchip v. Aptiv
IPR2024-00230

Aptiv Exhibit 2013 Page 76
Microchip v. Aptiv IPR2024-00228

DocuSign Envelope ID: 572DBD26-4FF7-4FA3-B858-2C79783CD24F

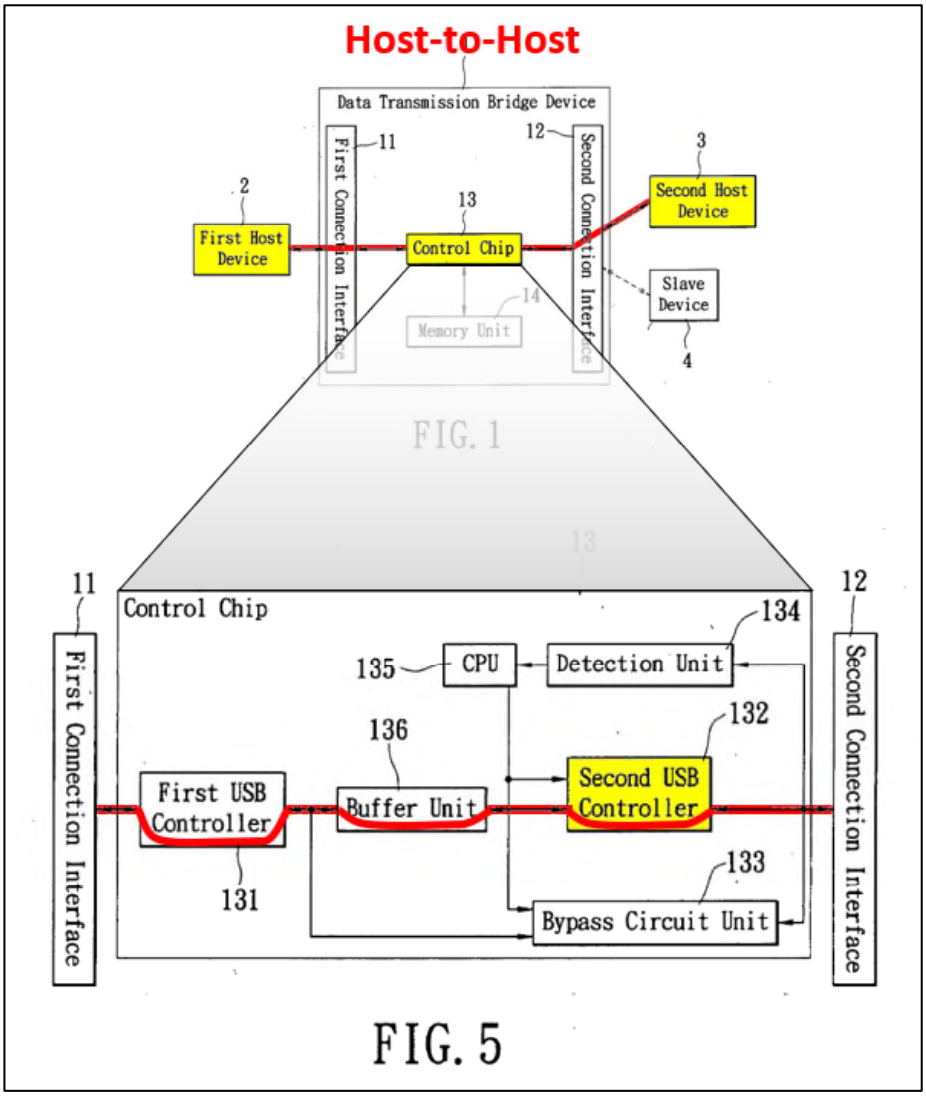

EX1015 (Chang II), Figs. 1, 5 (annotated).

162. As shown below (in purple), "*[t]he second path is the bypass path which spans first connection interface 11, first USB controller 131, bypass circuit unit 133, and second connection interface 12*." EX1015 (Chang II), [0023]. Chang II explains that "*the bypass circuit unit will directly connect the first USB controller and the second connection interface, in order to provide host-slave operation*

Microchip Ex. 1013, p. 77
Microchip v. Aptiv
IPR2024-00230

Aptiv Exhibit 2013 Page 77
Microchip v. Aptiv IPR2024-00228

DocuSign Envelope ID: 572DBD26-4FF7-4FA3-B858-2C79783CD24F

between the first host device and the slave device." *Id*., [0013]; *see also id*., [0037] (describing "*a direct connection between the first USB controller 131 and the second connection interface 12*").

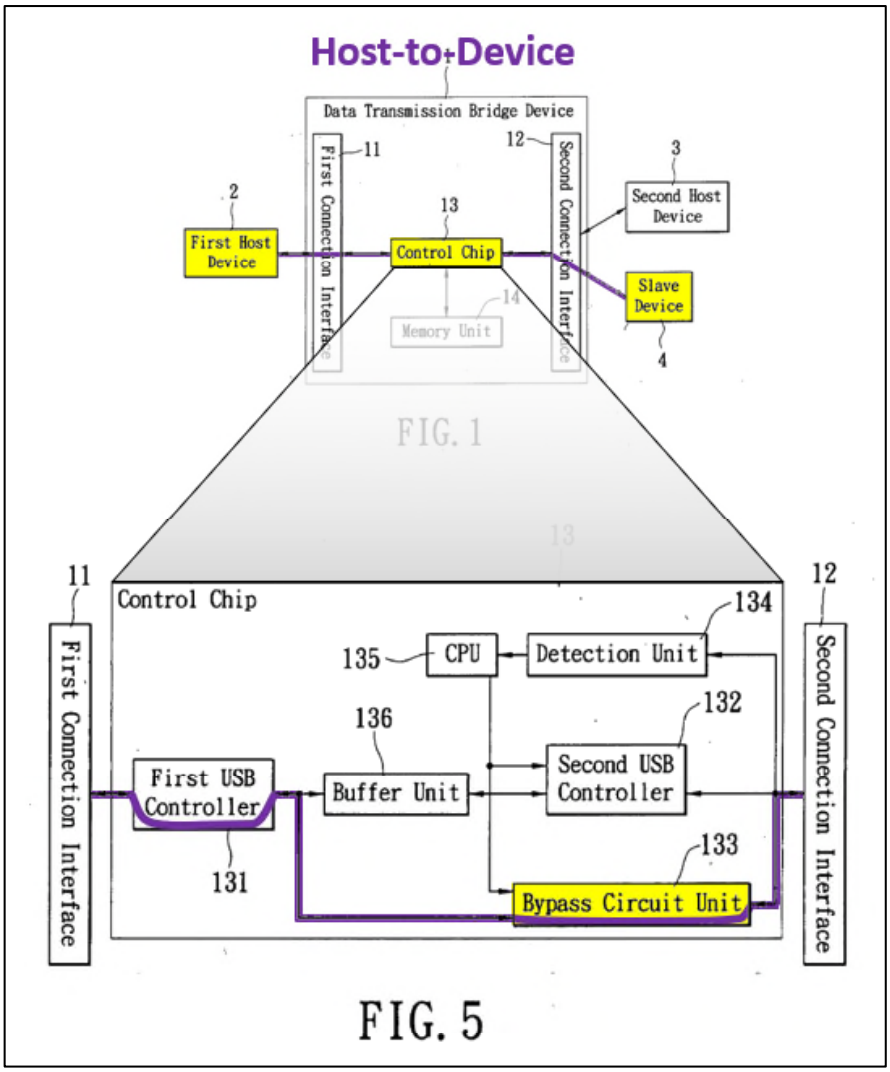

Id., Figs. 1, 5 (annotated).

163. Notably, Chang II discloses that, when in host-to-device mode, the "*data transmission bridge device*" acts "*similar[ly] to the commonly known USB*

Microchip Ex. 1013, p. 78
Microchip v. Aptiv
IPR2024-00230

Aptiv Exhibit 2013 Page 78
Microchip v. Aptiv IPR2024-00228

DocuSign Envelope ID: 572DBD26-4FF7-4FA3-B858-2C79783CD24F

HUB function." EX1015 (Chang II), [0027]; *see also id.*, [0040] ("*the control chip 13 at this time* ***functions like a USB Hub chip****, merely acting with intermediate transmission function*") (emphasis added). In this case, the transmission functions like a hub that connects an upstream host to the downstream device.

164. The CPU 135 performs a switching function: "*the detection signal will be received by the CPU, and the CPU will accordingly control the second USB controller (host to host data transfer) or the bypass circuit unit (host to slave data transfer) for the appropriate operation*." EX1015 (Chang II), [0013]; *see also id.,* [0023] ("*switching to one of the two transmission paths*"); [0038] (CPU setting transmission path). Chang II discloses deploying the relevant circuitry to switch transmission paths. *Id.*, [0039]-[0040].

165. To implement these different transmission paths, a POSITA would have understood that some type of USB switch, mux or crossbar would be required. Chang II's "*Second Connection Interface*" links to a consumer product and would have been understood to be some type of connector. As I discuss above, this connector has one set of USB data lines (D+ and D-) and a POSITA would have understood that those signals, as shown in Fig. 5, would have to be "routed" either to the Second USB Controller (132) or the Bypass Circuit Unit (133). Put another way, because the Second Connection Interface connects to both the Second USB Controller and the Bypass Circuit Unit, only one of these connections can be active

Microchip Ex. 1013, p. 79
Microchip v. Aptiv
IPR2024-00230

Aptiv Exhibit 2013 Page 79
Microchip v. Aptiv IPR2024-00228

DocuSign Envelope ID: 572DBD26-4FF7-4FA3-B858-2C79783CD24F

at the same time or there would be significant risk of signal interference. A POSITA would have understood that Chang II would disconnect the unique portions of the path that is not chosen (*e.g.*, when connecting a host to a device, it would be understood the line from the second interface to the second controller would not be a logically active signal line.). A switch, *e.g.*, a mux, performs this same connect/disconnect function. Accordingly, Chang II would have been understood to disclose (and certainly render obvious) a switch, even though Chang II does not expressly describe structure of a switch or logic to connect the appropriate lines.

166. A critical feature of Chang II is its "*main feature*" of "*the provision of two different transmission paths, so that by automatically detecting the type of device connected (host or slave) the present invention can switch to the proper transmission path*." EX1015 (Chang II), [0021]. The fundamental concepts of (1) detecting the host/device type and (2) selecting/switching between two transmission paths are repeated throughout the specification:

- There are "***two transmission paths****; the control chip is for* ***detecting the device*** *connected with the second connection interface, and accordingly* ***decide on one of the two transmission paths to use*** *for the data transmission*." *Id.*, [0012] (emphasis added).

Microchip Ex. 1013, p. 80
Microchip v. Aptiv
IPR2024-00230

Aptiv Exhibit 2013 Page 80
Microchip v. Aptiv IPR2024-00228

DocuSign Envelope ID: 572DBD26-4FF7-4FA3-B858-2C79783CD24F

- "*[A] detection of whether the type of external device is the second host device 3 or slave device 4 can be made [so] the proper transmission path can be switched to accordingly*." *Id.*, [0045].
- When "*connected to a second host device, the second USB controller ...* ***form[s] a bridge for data transfer between the second host device and the first USB controller****" and when "connect[ed] with a slave device,* ***the bypass circuit unit will directly connect the first USB controller … to provide host-slave operation***." *Id.*, [0013] (emphasis added). "*[T]he detection unit will automatically operate to [detect host/device and provide a] detection signal ... [to access] the second USB controller (host to host data transfer) or the bypass circuit unit (host to slave data transfer)*." *Id.*

***

167. Chang II discloses that its bridge device may be built into a data transmission cable (*see* EX1015 (Chang II), Fig. 3) or "*directly within a first host device*" such as a notebook computer. *Id.*, [0031], Fig. 4. In view of this disclosure, a POSITA would have understood (or at least have found it obvious) that the bridge may work in conjunction with (or be integrated with) a hub. Chang II expressly discloses that when connecting a host to a device, the transmission bridge functions like a USB Hub. *Id.*, [0040]. Chang II's teaching are not only compatible with a

Microchip Ex. 1013, p. 81
Microchip v. Aptiv
IPR2024-00230

Aptiv Exhibit 2013 Page 81
Microchip v. Aptiv IPR2024-00228

DocuSign Envelope ID: 572DBD26-4FF7-4FA3-B858-2C79783CD24F

hub, but these teachings expressly suggest its application to a hub. *Id*., [0012]-[0013], [0027].

168. In summary, Chang II discloses "*a data transmission bridge device, which by automatically detecting the type of connected device to switch between the proper transmission path, can not only support data transmission between a host device and a slave device, but can also directly support data transmission between two host devices*." EX1015 (Chang II), [0046].

C. Chutorash Summary

169. Chutorash is titled "*Vehicle User Interface Systems and Methods*." Chutorash recognizes that "*[v]ehicles typically include a number of electronics systems and subsystems*" such as "*an in-vehicle entertainment system*," but such systems "*typically do not interface well with remote sources and portable devices such as cellular phones*." EX1029 (Chutorash), 1:20-28. As such, there exists "*a need for improved user interface features and/or connectivity features relating to vehicle control systems, remote sources, and/or portable devices*." *Id*., 1:34-36.

170. Chutorash discloses a "*vehicle control system 106 (e.g., media system, navigational system, entertainment system, display system, communications systems, etc.)*" connected to "*a portable electronic device 116*" as shown in Figs. 1 and 3 below. EX1029 (Chutorash), 5:31-33, 6:51-7:10. The "*portable electronic device*

Microchip Ex. 1013, p. 82
Microchip v. Aptiv
IPR2024-00230

Aptiv Exhibit 2013 Page 82
Microchip v. Aptiv IPR2024-00228

DocuSign Envelope ID: 572DBD26-4FF7-4FA3-B858-2C79783CD24F

116 can provide information to vehicle control system 106 for processing." *Id*., 7:8-10.

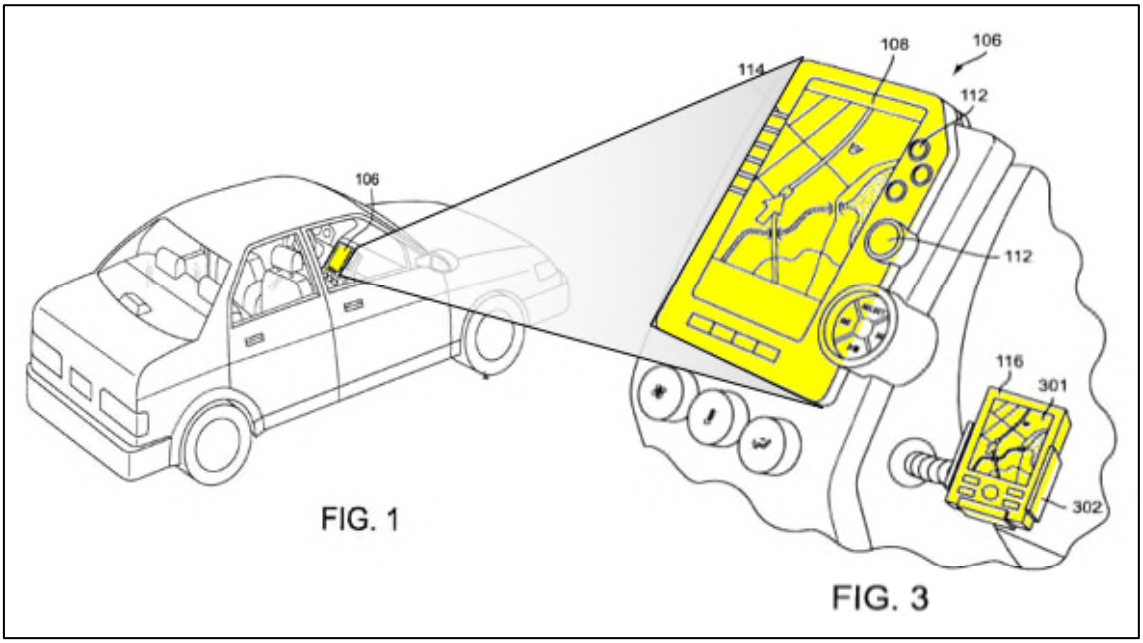

Id., Figs. 1, 3 (annotated).

171. Chutorash discloses "*various embodiments for a vehicle control system connecting via a USB interface to various remote sources*" in Figs. 27-30. EX1029 (Chutorash), 27:1-3. In particular, Chutorash's vehicle control system 106 includes "*a USB connector or interface 2728, 2744*" that "*is provided within vehicle 100*." *Id*., 27:4-10; *see also id*., 27:7-10 ("*The USB interface may be embedded in vehicle control system 106 (interface 2728) or … coupled to vehicle control system 106 (interface 2744)*."). These USB interfaces (with "*mobile phone 2734," "PDA 2746," and "media player 2752*" connected to them) are illustrated in Fig. 27 below. The availability of USB ports in vehicle 100 is unsurprising given that vehicle

Microchip Ex. 1013, p. 83
Microchip v. Aptiv
IPR2024-00230

Aptiv Exhibit 2013 Page 83
Microchip v. Aptiv IPR2024-00228

DocuSign Envelope ID: 572DBD26-4FF7-4FA3-B858-2C79783CD24F

control and entertainment system 106 is essentially a built-in computer that "*could be classified as an embedded host*." *Id.*, 27:26-28.

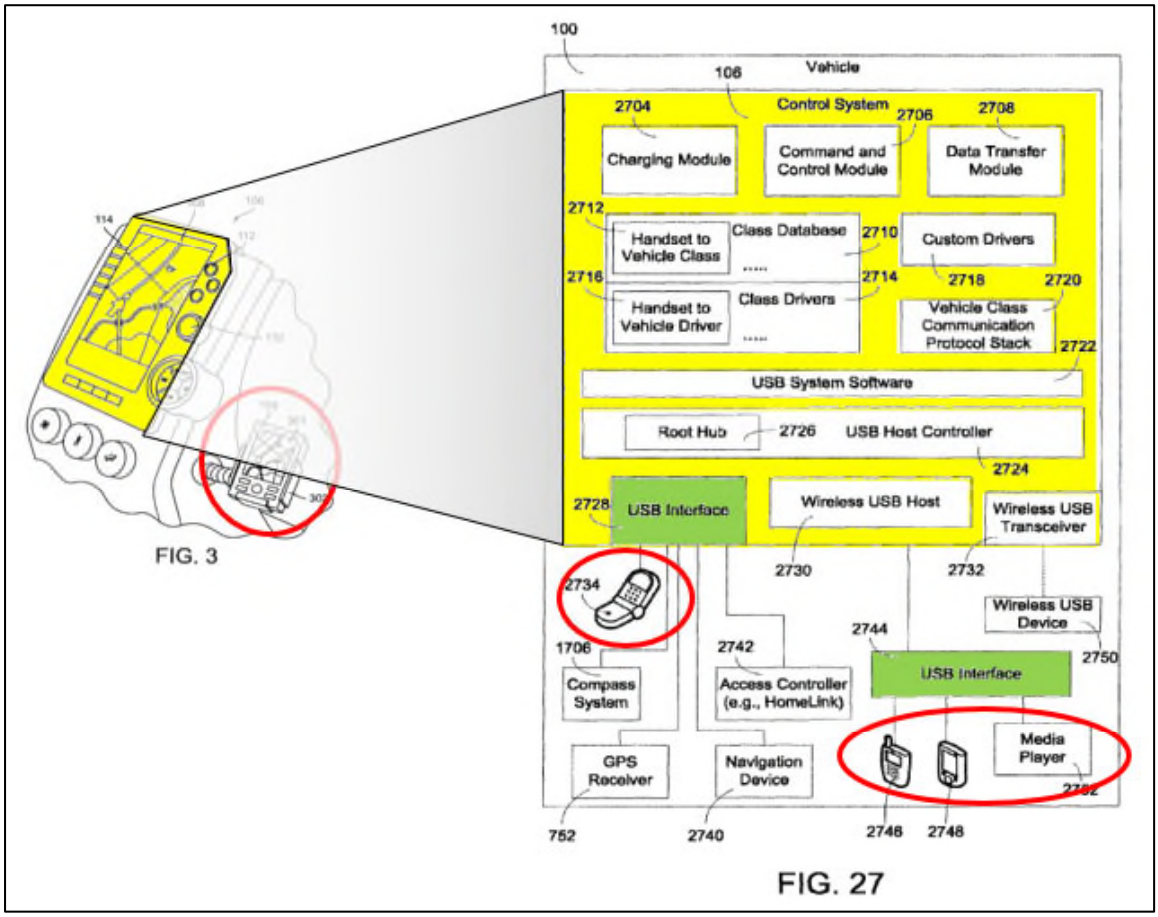

Id., Figs. 3, 27 (annotated).

172. The "*USB interface 2728, 2744 may facilitate operative connection of a mobile phone 2734*." EX1029 (Chutorash), 27:12-25. The "*[v]ehicle control system 106 may use the USB interface 2728 and/or features for charging,* ***command and control****, and/or data transfer*." *Id.* (emphasis added); *see also id.*, 13:22-24. For example, "*[v]ideo services 724 of the portable device 116 may be utilized by*

Microchip Ex. 1013, p. 84
Microchip v. Aptiv
IPR2024-00230

Aptiv Exhibit 2013 Page 84
Microchip v. Aptiv IPR2024-00228

DocuSign Envelope ID: 572DBD26-4FF7-4FA3-B858-2C79783CD24F

vehicle control system 106 to provide video decoding and/or playback features to the vehicle." *Id*., 14:40-53; *see also id*., 14:62-67.

173. "*USB Interface[s]*" 2728 and/or 2744 would be USB hubs because each has multiple products connected to it. As I discuss in §VI.A.2, a hub has an upstream port and multiple downstream ports, which is the function that USB Interfaces 2728 and 2744 are shown to perform.

D. AN96527 Summary

174. AN96527 is a Cypress application. EX1064, 1. Cypress Semiconductor has existed for decades and was a well-known semiconductor company in the industry. Among other products, Cypress offered various USB products, components, and solutions. Like other tech companies, Cypress had a public website that a POSITA would have been aware of and could readily have located AN96527. AN96527 discusses "*the USB-IF Type-C Specification and the Power Delivery Specification and how they can be designed into practical products*" (EX1064, 1), including USB hubs (*id*., 4, 25-26). This application note would have been used (in the context of the USB-PD (EX1020) and USB-C (EX1019) specifications), by POSITAs to assist in implementing this product into a larger system. The application note explains that Power Delivery Specification enables "*power delivery [to] be negotiated*" (*e.g*., variable voltage and current) between a hub and downstream product. EX1064, 6; EX1020, 36-37. The practical use of this was that downstream

Microchip Ex. 1013, p. 85
Microchip v. Aptiv
IPR2024-00230

Aptiv Exhibit 2013 Page 85
Microchip v. Aptiv IPR2024-00228

DocuSign Envelope ID: 572DBD26-4FF7-4FA3-B858-2C79783CD24F

products could operate at different power levels and when higher power for charging (or other purposes) was necessary, it was possible to negotiate a higher power draw.

IX. MOTIVATION TO MODIFY CHANG IN VIEW OF CHANG II AND THE KNOWLEDGE OF A POSITA

175. As I describe in §VIII.A, Chang discloses an enhanced USB hub with several standard downstream device ports (44) and a special purpose downstream port (50) that supports a connection to a USB host via a host-to-host bridge. For several reasons, a POSITA would have been motivated to modify Chang in view of Chang II and the knowledge of a POSITA to replace one or more of Chang's downstream ports with dual-role ports and include a switch to route each port to the appropriate transmission path.

176. **First**, the industry growth of dual-role products leading up to 2013 (the priority date of the Challenged Patents[8]) would have motivated a POSITA to replace the downstream ports with dual-role ports. Including dual-role ports would effectively modernize Chang in line with the industry adoptions of dual-role consumer USB products. There was rapid growth of consumer products (*e.g.*, smartphones) with dual-role USB capabilities before 2013, and the specification of the Challenged Patents recognizes this fact. EX1003 ('420 patent), 2:38-3:3; *see also* §VI.B. The specification also admits that manufacturers that deploy USB

[8] Some claims have a later priority date. *See* ¶¶44, 109, and 123.

Microchip Ex. 1013, p. 86
Microchip v. Aptiv
IPR2024-00230

Aptiv Exhibit 2013 Page 86
Microchip v. Aptiv IPR2024-00228

DocuSign Envelope ID: 572DBD26-4FF7-4FA3-B858-2C79783CD24F

systems, *e.g.*, automobile manufacturers, were "*motivated to adapt to this changing technology*," *i.e.*, adapt the USB systems to support USB products that either present as host or device or that dynamically switch between host and device modes. EX1003 ('420 patent), 3:8-67. Also, the industry had recognized this need to support dual-role products even before Chang I, and the USB-IF promulgated a standard beginning in 2001 (the OTG Supplement) for this very purpose. *See supra* §VI.B.

177. **Second**, dual-role ports that could attach to dual-role products had several common-sense benefits. It would be impractical and contrary to the goals of the USB specifications, to require consumers that use dual-role products to understand when to switch connections between a dedicated host port (*e.g.*, Chang's port 50) and a dedicated device port (*e.g.*, Chang's port 44). The consumer would not necessarily know when to connect the product to the appropriate port. At the very least, it would be inconvenient for the consumer to have to disconnect and reconnect the product to different ports. Further, dual-role ports save costs. Dedicated ports have "*a disadvantage in that it requires multiple connectors, multiple ASIC pins and the like*," which adds "*overhead*" and "*increase[s] the cost[s]*." EX1025 (Castleberry), 1:38-43; *see also* EX1022, §1.1 ("*An OTG product is a portable device that uses a single Micro-AB receptacle (and no other USB receptacles) to operate at times as a USB Targeted Host and at times as a USB*

Microchip Ex. 1013, p. 87
Microchip v. Aptiv
IPR2024-00230

Aptiv Exhibit 2013 Page 87
Microchip v. Aptiv IPR2024-00228

DocuSign Envelope ID: 572DBD26-4FF7-4FA3-B858-2C79783CD24F

peripheral."). Dual-role ports reduce the cost and number of necessary ports relative to dedicated device and host ports.

178. **Third**, modifying Chang to include dual-role ports is consistent with Chang's goals. Chang seeks to achieve "*a device capable of easily establishing a connection between a computer and another computer*." EX1014 (Chang), [0003]. In the context of Chang's system, it partially accomplishes this by allowing a downstream host PC (70) to connect to upstream host PC (20) by plugging the downstream host into a hub port. *Id.*, [0002], [0020], [0023], Figs. 3-4. This works because the bridge is built into the system, two hosts can connect by simply connecting to the appropriate ports. But in the context of dual-role products, such as a smartphone, the problem with this partial solution is the use of a dedicated downstream host port. *Id.* As the specification of the Challenged Patents admits, prior art smartphones had effectively become like laptops or PCs, which usually act as host. EX1005, 2:66-3:3; EX1003, 2:62-66; EX1007, 2:64-3:1; EX1009, 2:65-3:2. The Challenged Patents acknowledge that USB OTG devices could dynamically operate as either host or device, and those devices could switch roles. EX1005, 3:25-27; EX1003, 3:22-24; EX1007, 3:24-26; EX1009, 3:25-27. *See* ¶84. Android smartphones could dynamically switch host/device roles using a version of this scheme. Thus, connecting a smartphone to the dedicated downstream

Microchip Ex. 1013, p. 88
Microchip v. Aptiv
IPR2024-00230

Aptiv Exhibit 2013 Page 88
Microchip v. Aptiv IPR2024-00228

DocuSign Envelope ID: 572DBD26-4FF7-4FA3-B858-2C79783CD24F

port would have the problem that the phone might act as either the USB host (as a computer) or USB device.

179. Chang's dedicated host port would not be compatible with the smartphone acting as a device and would require that the user switch to another port. With a dual-role port, the user would not have to know what mode the smartphone was operating in, and then switch the smartphone between the appropriate dedicated host or device port. When the smartphone acts as a computer (in host mode), all that is necessary is the connection to the dual-role port, which "*easily establish[es] a connection*" (EX1014 (Chang), [0005]) to the upstream host (through the bridge). Likewise, when the smartphone acts as a device, all that is necessary is the same physical connection to the dual-role port where a connection to the upstream host (that bypasses the bridge) would automatically be made. This avoids the inconvenience and confusion of consumers having to know the operating mode of the smartphone and manually switching to the appropriate port (and knowing the appropriate port for each mode). *E.g.*, EX1022, §1.1 (prior art receptacles for this very purpose). Providing dual-role ports is further consistent with Chang's express disclosure of providing a host-to-host connection, which enables the benefits of having a host connected on the downstream port (*e.g.*, using a familiar UI on a

Microchip Ex. 1013, p. 89
Microchip v. Aptiv
IPR2024-00230

Aptiv Exhibit 2013 Page 89
Microchip v. Aptiv IPR2024-00228

DocuSign Envelope ID: 572DBD26-4FF7-4FA3-B858-2C79783CD24F

smartphone).[9] *See* §VIII.A. Accordingly, a POSITA would have been motivated to include a dual-role port (or ports) in view of Chang's express goal of providing easy connections.

180. In the vehicle deployment context (*see* §VI.D), this convenient host-to-host connection was particularly suitable because the vehicle's upstream host was often embedded in a component of the vehicle (*e.g.*, head unit / infotainment system), thus requiring a host-to-host connection when the downstream consumer product, *e.g.*, smartphone, operates as host. *See* EX1029 (Chutorash), 27:26-29 ("*embedded host*"), EX1049 (describing how cars had "*become a PC on wheels*").

181. **Fourth**, a POSITA would have been motivated to additionally consider Chang II for improving Chang because Chang II includes a motivation to use its teachings in the context of hubs. Chang II discloses that, when providing for a host-to-device connection, the data transmission bridge device acts "*similar[ly] to the commonly known USB HUB function*." EX1015 (Chang II), [0027]; *see also id.*, [0040] ("*the control chip 13 at this time* ***functions like a USB Hub chip****, merely acting with intermediate transmission function*") (emphasis added). Chang II refers to the "*intermediate transmission function*" that is similar to the Hub function

[9] A real-world example would be using a preferred smartphone app to select/play music on speakers connected to the upstream host.

Microchip Ex. 1013, p. 90
Microchip v. Aptiv
IPR2024-00230

Aptiv Exhibit 2013 Page 90
Microchip v. Aptiv IPR2024-00228

DocuSign Envelope ID: 572DBD26-4FF7-4FA3-B858-2C79783CD24F

because its operation here is akin to a hub that transmits host communication downstream to a device and vice versa. A POSITA would have understood that Chang II's teachings are thus particularly suitable in the context of a hub.

182. A POSITA would have had a high expectation of success in modifying Chang to include dual-role ports for several reason.

183. **First**, dual-role ports and detection circuity to determine whether the downstream product is in host or device mode were well-known and well understood. §VI.B.1. In addition to actual commercial products, contemporaneous prior art references showed how to implement a dual-role port, including the associated mode detection. *See* EX1025 (Castleberry), 3:10-32, 3:40-4:8, 7:34-40; and EX1052 (Wang), 3:21-50. Consistent with this, the Challenged Patents recognize that several solutions for supporting dual-role ports in a USB system were readily available. EX1005 ('962 patent), 3:21-59.

184. **Second**, Chang provides a roadmap to implement dual-role ports and the necessary switching with little modification. Importantly, Chang already discloses separate transmission paths for a host-to-host connection ("host-to-host transmission path 54") and host-to-device connections ("transmission paths 48"):

Microchip Ex. 1013, p. 91
Microchip v. Aptiv
IPR2024-00230

Aptiv Exhibit 2013 Page 91
Microchip v. Aptiv IPR2024-00228

DocuSign Envelope ID: 572DBD26-4FF7-4FA3-B858-2C79783CD24F

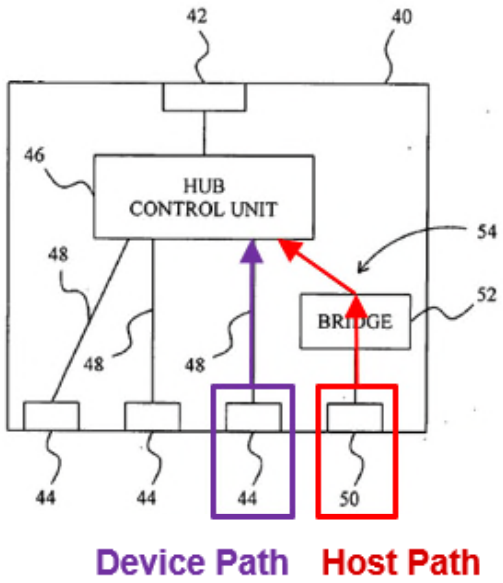

EX1014 (Chang), Fig. 3 (annotated), [0019]-[0020]. A dual-role mode port would require detecting the mode of the product (*viz.*, using signal detection circuitry) and switching functionality to select the appropriate path based on the detected mode.

185. **Third**, it was already well-known to include switching and detection functionality to select the appropriate transmission path for dual-role devices depending on the consumer unit's operating mode, *i.e.*, a path such as the "host-to-host transmission path 54" or the "transmission paths 48." §§VI.B, VI.B.1, and VI.B.2; *see also* EX1053 (Sakaki), Fig. 1, [0031]-[0034] (switching data line connections based on host or device mode detection); EX1052 (Wang), Fig. 1, 3:7-20 (describing "*switching structure 170*" to control data paths depending on operating mode); EX1017 (Hesse), Fig. 6, [0057] (connecting ports to different port routers depending on unit's configuration). Accordingly, in the context of Chang, a

Microchip Ex. 1013, p. 92
Microchip v. Aptiv
IPR2024-00230

Aptiv Exhibit 2013 Page 92
Microchip v. Aptiv IPR2024-00228

DocuSign Envelope ID: 572DBD26-4FF7-4FA3-B858-2C79783CD24F

POSITA would have been motivated to implement dual-role ports by including detection circuitry (*e.g.*, a voltage divider or other means as discussed in §VI.B.1) and a switch (*e.g.*, multiplexer or crossbar) that connects the dual-role port(s) directly to the hub's upstream port (when the consumer product is configured as a device, *i.e.*, path 48) or to the hub through the bridge (when the consumer product is configured as host, *i.e.*, path 54).

186. **Fourth**, Chang discloses a bridge (including referencing commercial bridge chips) but does not detail the bridge. EX1014 (Chang), [0020]. Chang II, however, discloses its bridge in significant detail, including detection and switching functionality. *E.g.*, EX1015 (Chang II), Figs. 1-2 and 5. This would both motivate a POSITA to consider Chang II teachings and as I explain here, provide a high expectation of success in modifying Chang.

187. **Fifth,** the USB context of the dual-role ports, switches, device type detection, etc. of the Chang/Chang II combination were quite straightforward to test and verify. At the time of the filing of the Challenged Patents, there were already existing USB hosts, both in and out of vehicles, and numerous USB devices intended to function with those hosts, including dual-role devices such as smartphones. To test a dual-role USB port a POSITA only has to configure the existing USB host to expect such a device and to plug in the target device to verify that it works. In addition to verifying the device connection functionally, there were numerous tools

Microchip Ex. 1013, p. 93
Microchip v. Aptiv
IPR2024-00230

Aptiv Exhibit 2013 Page 93
Microchip v. Aptiv IPR2024-00228

DocuSign Envelope ID: 572DBD26-4FF7-4FA3-B858-2C79783CD24F

such as USB analyzers (www.totalphase.com/company/press/2005/beagle-usb12-launch/) that showed not only the USB data traffic but also the state of the connection. These tools would add to the functional test and demonstrate that the USB specification was followed. Accordingly, a POSITA would have known that verifying the combined Chang and Chang II teachings would be simple.

188. Chang II provides examples of switching for either a host- or device-product[10] in the context of using a bridge: "*the main feature is the provision of two different transmission paths, so that by automatically detecting the type of device connected (host or slave) the present invention can switch to the proper transmission path, thus not only can host-slave operation between the host device and the slave device be supported, but direct bridging between two host device for data transfer is also possible*." EX1015 (Chang II), [0021]. Thus, Chang II uses "*switch[ing]*" to either connect the consumer port (and corresponding product) to a "*bridge*" transmission path (when the product is a host) or a "*bypass*" path (when the product is a device). *Id*., Figs. 1, 5, [0013]. With reference to Fig. 5, it can be seen that the output of USB Controller 131 is shared between the host and device paths. This is possible because, at no time, will both paths be active and create a conflict on the

[10] It would have been understood (and at least obvious) that connecting a dual-role product to the second interface was within the scope of Chang II's disclosure. ¶157.

Microchip Ex. 1013, p. 94
Microchip v. Aptiv
IPR2024-00230

Aptiv Exhibit 2013 Page 94
Microchip v. Aptiv IPR2024-00228

DocuSign Envelope ID: 572DBD26-4FF7-4FA3-B858-2C79783CD24F

shared wire. At all times, one path will be left floating (*e.g.*, tri-stated). This achieves the same functionality as a switch (*e.g.*, a mux) and is typical when multiple signal lines connect to a common node (this prevents interference that can corrupt signals).

189. Chang II also details detection functionality with a "*detection unit 134*" that is part of the bridge's "*control chip*." EX1015 (Chang II), Figs. 1, 5, [0034]. Chang II refers to an "*inquire*" signal as part of its detection functionality. The detection unit detects the connection of a host or device by (1) sending an "*inquire signal*" and receiving a response (when a host connects) or (2) receiving an "*inquire signal*" (when a device connects). *Id.*, [0038]-[0040]. The detection unit then produces either a "*bridging detection signal*" (after detecting a host) or "*slave detection signal*" (after detecting a device). *Id.* These "*inquire signal[s]*" refer to the Host/Device Detection techniques that I discuss in §VI.B.1.

190. Putting these teachings together, Chang II discloses that the bridging detection signal causes the switching to the appropriate transmission "*path*" (to use the bridge or to bypass the bridge). EX1015 (Chang II), [0042]-[0044]. Accordingly, a POSITA would have been motivated, with a high expectation of success, to route the dual-role ports (and products attached thereto) to the appropriate path using a detection circuit and a switch.

Microchip Ex. 1013, p. 95
Microchip v. Aptiv
IPR2024-00230

Aptiv Exhibit 2013 Page 95
Microchip v. Aptiv IPR2024-00228

DocuSign Envelope ID: 572DBD26-4FF7-4FA3-B858-2C79783CD24F

191. Two obvious implementations for modifying Chang Fig. 3 are shown below. The implementation at left includes a 2:1 multiplexer (green) and one dual-role port (yellow). The implementation at right includes a crossbar switch (green) and three dual-role ports (yellow).

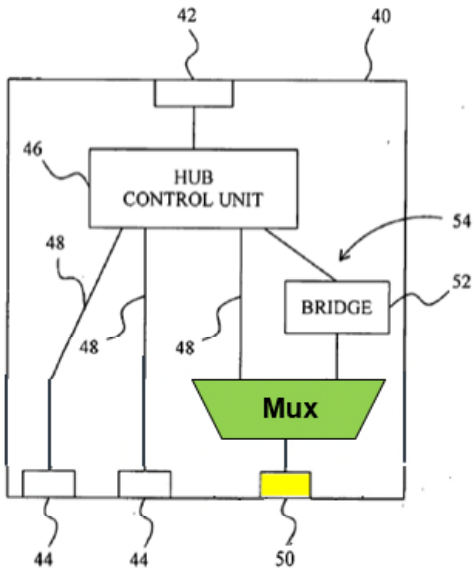

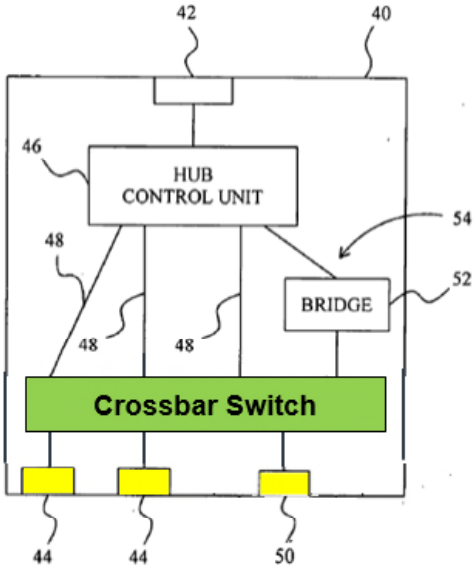

EX1014 (Chang), Fig. 3 (modified and annotated). The primary functional difference is that the "Mux Implementation" (left) only supports a host-to-host connection through port 50 whereas the "Crossbar Implementation" (right) supports a host-to-host connection through any of ports 44 or 50. In this example, with one bridge, only one host-to-host connection at a time is possible.

192. As I describe above, detection circuitry is necessary to detect the mode of the dual-role product, which then causes selection of the appropriate path. An

DocuSign Envelope ID: 572DBD26-4FF7-4FA3-B858-2C79783CD24F

example deployment of a detection unit (*e.g.*, in view of Chang II) is shown in the Mux Implementation:

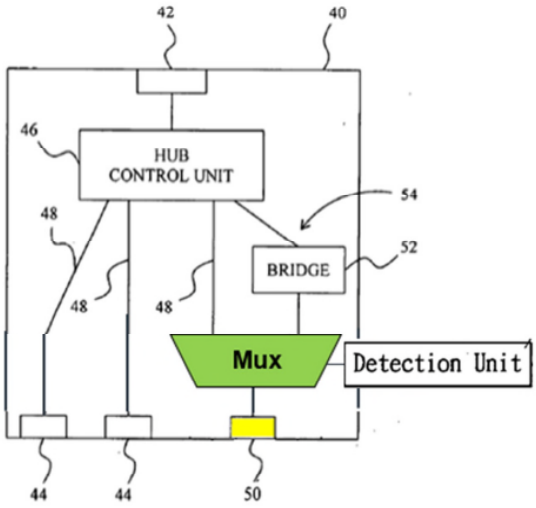

EX1014 (Chang), Fig. 3 (modified and annotated).

193. This detection circuitry could be deployed in several obvious ways. In the example above it is associated with the mux. In another obvious example, it could be separate and between the dual-role port 50 and mux. This location is obvious because it is the first place a signal from a downstream USB product arrives. In a third obvious location, it could be located in the bridge to take advantage of existing logic and circuitry to, for example, process the output of the detection circuit in a manner similar to Chang II's CPU 135 (EX1015 (Chang II), [0038], Fig. 5). It would have been routine and obvious for the bridge and/or the detection unit to control the switching functionality. For example, as I describe above, Chang II's

Microchip Ex. 1013, p. 97
Microchip v. Aptiv
IPR2024-00230

Aptiv Exhibit 2013 Page 97
Microchip v. Aptiv IPR2024-00228

DocuSign Envelope ID: 572DBD26-4FF7-4FA3-B858-2C79783CD24F

bridge includes a "*detection unit*" (in the control chip) that detects the mode of the downstream product for selection of the appropriate transmission path. *Id.*, [0022]-[0023], [0034]. The above illustrates the detection unit connected to the mux to show that host/device detection ultimately controls the mux's select line. Additionally, the detection unit must connect to the downstream port to detect the mode, as shown in Chang II. *Id*., Fig. 5.

194. A POSITA would have been motivated, with a high expectation of success, to implement the crossbar switch so that each downstream port is a dual-role port. Implementing all downstream port as dual-role ports would increase user convenience because users would not need to know which port was a dual-role port and suitable for, *e.g.*, a smartphone. In addition, dual-role ports reduce footprint, because again instead of two ports a single dual-role port in each place can be used.

195. It was well known to include multiple dual-role hub ports. For example, Overtoom discloses a vehicle entertainment system with a hub that includes five dual-role ports (202):

Microchip Ex. 1013, p. 98
Microchip v. Aptiv
IPR2024-00230

Aptiv Exhibit 2013 Page 98
Microchip v. Aptiv IPR2024-00228

DocuSign Envelope ID: 572DBD26-4FF7-4FA3-B858-2C79783CD24F

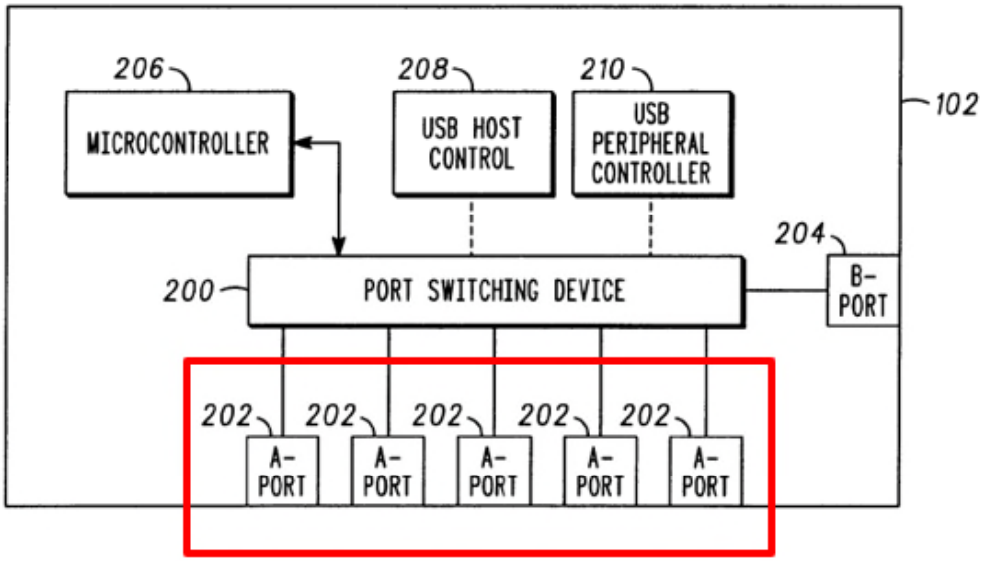

FIG. 2

EX1016 (Overtoom), Fig. 2 (annotated), [0024], [0027] (units through ports 202 may act as device or host), [0005] (A- type ports start as host).

196. U.S. Pub. 2006/0195625 ("Hesse," EX1017) discloses multiple downstream ports that may operate in different modes:

Microchip Ex. 1013, p. 99
Microchip v. Aptiv
IPR2024-00230

Aptiv Exhibit 2013 Page 99
Microchip v. Aptiv IPR2024-00228

DocuSign Envelope ID: 572DBD26-4FF7-4FA3-B858-2C79783CD24F

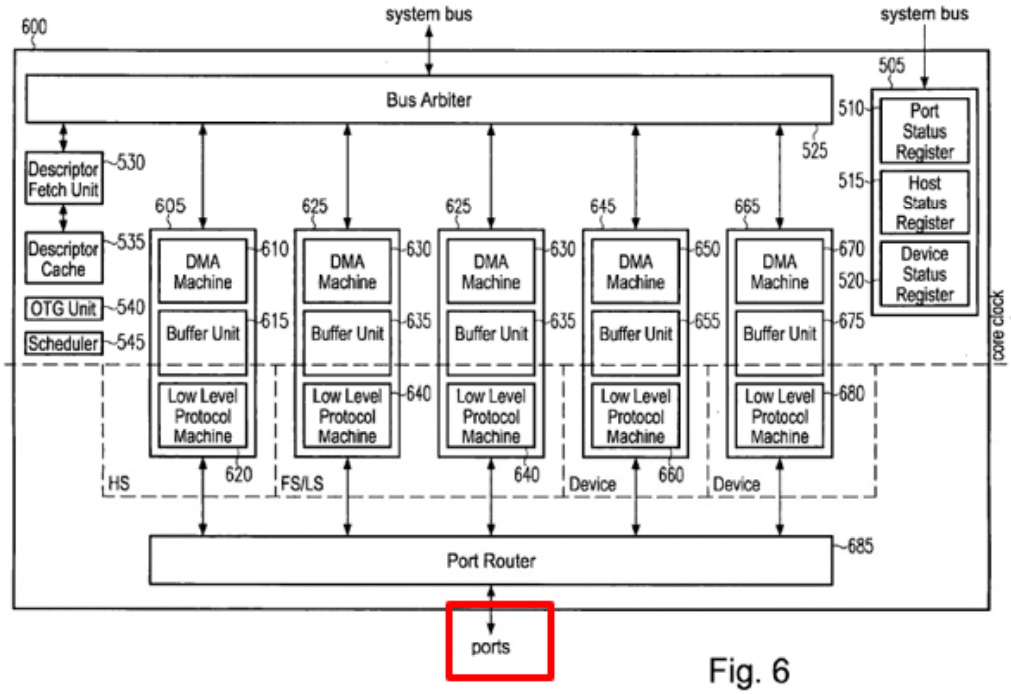

Fig. 6

Id., Fig. 6 (annotated), [0055]-[0056] (ports support "*high speed (HS) host mode*," "*device modes*," etc.).

197. When multiple ports are dual-mode, it was well-known and obvious to a POSITA to include basic switching functionality to route each port to the appropriate transmission path. *See* §VI.B.2. One well-known solution was a crossbar switch that would route any port to any transmission path, *e.g.*, as Hesse discloses that "*Port Router*" may be a "*crossbar switch for assigning each physical port to the respective port handler*":

Microchip Ex. 1013, p. 100
Microchip v. Aptiv
IPR2024-00230

Aptiv Exhibit 2013 Page 100
Microchip v. Aptiv IPR2024-00228

DocuSign Envelope ID: 572DBD26-4FF7-4FA3-B858-2C79783CD24F

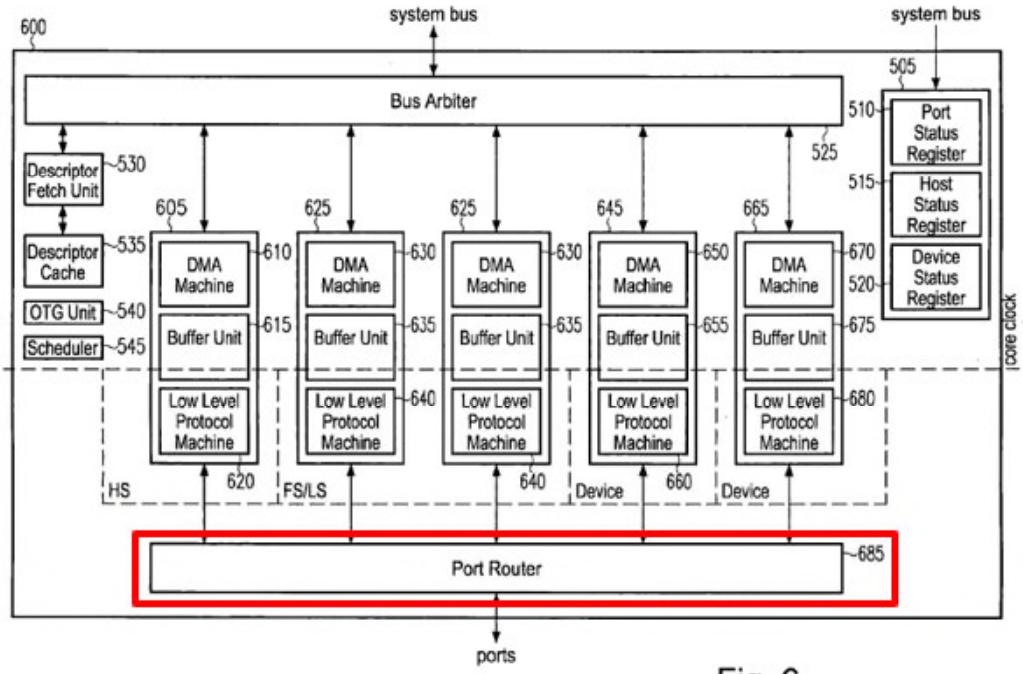

Fig. 6

EX1017 (Hesse), Fig. 6 (annotated), [0055]-[0057].

198. The Crossbar and Mux Implementations of Chang Fig. 3 come, respectively, in two variations, both of which are shown below.

Microchip Ex. 1013, p. 101
Microchip v. Aptiv
IPR2024-00230

Aptiv Exhibit 2013 Page 101
Microchip v. Aptiv IPR2024-00228

DocuSign Envelope ID: 572DBD26-4FF7-4FA3-B858-2C79783CD24F

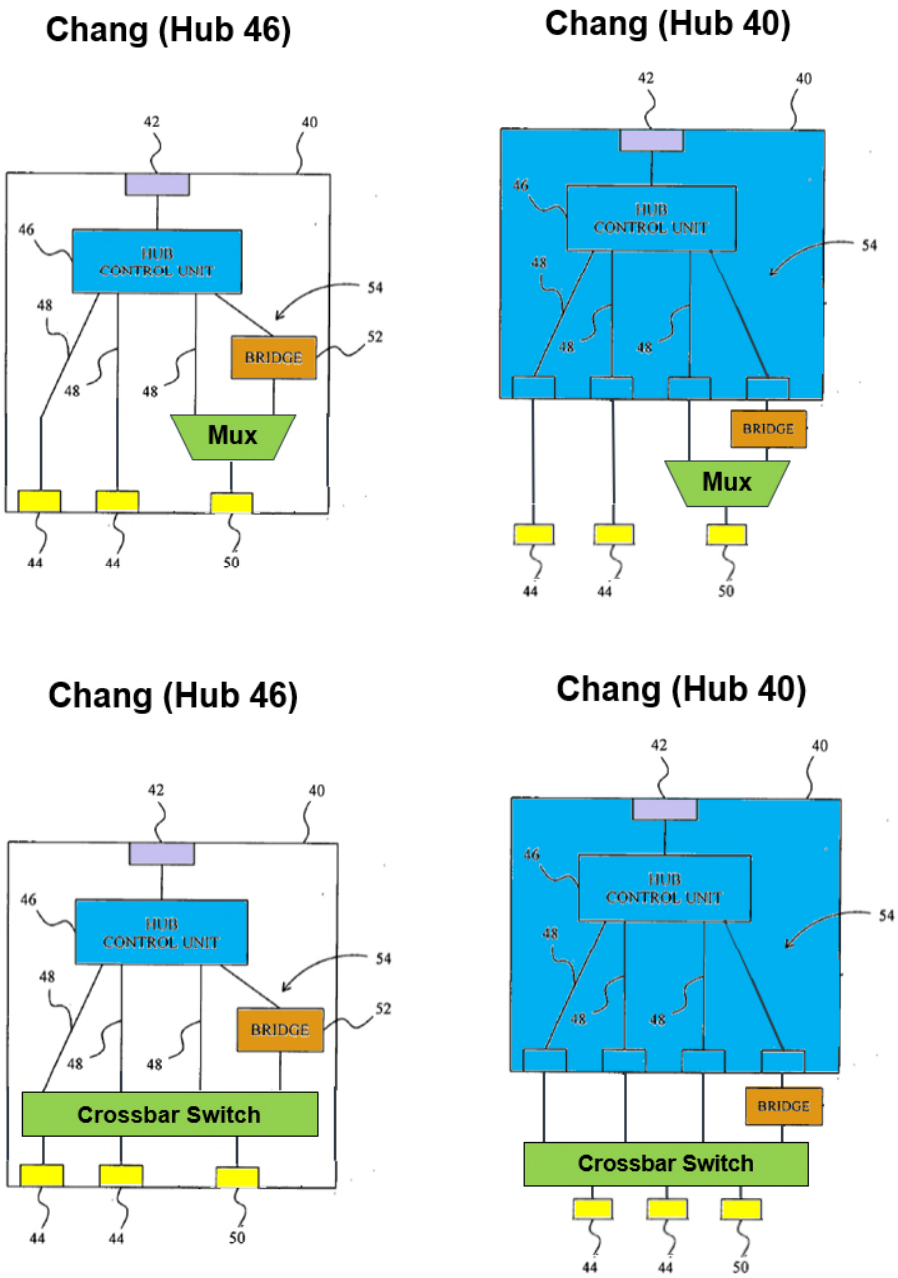

EX1014 (Chang), Fig. 3 (modified annotated).

199. The lefthand version has the (1) bridge and (2) mux or crossbar inside hub 40. In the righthand version, the (1) bridge and (2) mux or crossbar are located

Microchip Ex. 1013, p. 102
Microchip v. Aptiv
IPR2024-00230

Aptiv Exhibit 2013 Page 102
Microchip v. Aptiv IPR2024-00228

DocuSign Envelope ID: 572DBD26-4FF7-4FA3-B858-2C79783CD24F

outside hub 40.[11] For reasons that I explain in my Unpatentability Analysis, I refer to these as "Chang (Hub 46)" and "Chang (Hub 40)," respectively.

200. The placement of the (1) bridge and (2) mux or crossbar inside/outside of hub 40 is merely a design choice, and a POSITA would have been motivated, with a high expectation of success, to implement either depending on design considerations. There are only a few places in the system suitable for placement of these components, *e.g.*, inside the hub 40 enclosure or a larger enclosure that integrates hub 40 and another board including the switch and bridge.

201. As to placing the components outside hub 40, a POSITA would have understood that one benefit is enabling the use of a conventional off-the-shelf hubs, which likely would result in faster development and quicker time to market. In other words, a manufacturer would be able to simply order off-the-shelf hubs (and easily

[11] In the "Hub 40" version of the Mux Implementation, the figure depicts lines connecting the ports 44 to the hub 40. This is intended to reflect that the ports 44 can be connected via wires to allow a variety of different physical placements of the ports (*e.g.*, in the backseat of a vehicle), but the ports 44 can just as easily be located on the hub itself without any additional wiring. This is simply a design implementation based on the deployment context. More generally, the same is true for all of the ports 44 and 50 in both "Hub 40" implementations.

Microchip Ex. 1013, p. 103
Microchip v. Aptiv
IPR2024-00230

Aptiv Exhibit 2013 Page 103
Microchip v. Aptiv IPR2024-00228

DocuSign Envelope ID: 572DBD26-4FF7-4FA3-B858-2C79783CD24F

multi-source these hubs) rather than requiring procurement of custom hubs (or manufacturing custom hubs). The components outside of hub 40 would then simply connect to the conventional hub. For example, Chang II discloses a bridge and bypass outside of any hub (*e.g.*, connecting cable between hub port and consumer dual-role device). EX1015 (Chang II), Figs. 1, 3, [0023], [0029]. This allows for minimal modifications to legacy designs and easy sourcing of components (*e.g.*, the conventional hub).

202. As to integrating the components inside hub 40, one benefit would include a more compact design and overall lower manufacturing/assembly costs. Here, rather than hub 40 and a separate unit (*e.g.*, a separate board with bridge, switching, and detection circuitry) all that is necessary is integrating these additional components into hub 40 (*e.g.*, as Chang II discloses integrating multiple functional circuits into control chip 13, EX1015 (Chang II), Fig. 5). Such integration of additional components into hub 40 was routine. For example, Chang discloses that it is "*possible*" to integrate the bridge into the hub control unit and separately, one could "*integrate*" the bridge with a "*conventional hub*." EX1014 (Chang), [0022]. Moreover, Chang discloses adding host-to-host functionality to the hub "*merely by integrating or adding a bridge to a USB hub*" which "*does not require too many modifications on the current hub control unit*." *Id.*, [0024]. Thus, "*the derived cost*

Microchip Ex. 1013, p. 104
Microchip v. Aptiv
IPR2024-00230

Aptiv Exhibit 2013 Page 104
Microchip v. Aptiv IPR2024-00228

DocuSign Envelope ID: 572DBD26-4FF7-4FA3-B858-2C79783CD24F

is relatively low, while a multi-functional USB hub with a host-to-host transmission function is obtained." *Id*.

X. MOTIVIATION TO MODIFY CHANG IN VIEW OF CHANG II, CHUTORASH, AND THE KNOWLEDGE OF A POSITA

203. A POSITA would have been motivated, and had a high expectation of success, to additionally combine Chutorash because Chutorash provides an obvious deployment environment for the Chang/Chang II system. In particular, Chang, Chang II, and a POSITA's knowledge discloses a USB hub with a host-to-host bridge and one or more dual-role ports. *See* §IX. Chutorash discloses using a USB hub in a vehicle control/infotainment system. *See* §VIII.C. Accordingly, a POSITA would be motivated to apply Chutorash's teachings to Chang and Chang II.

204. Chutorash discloses a vehicle control/infotainment system with "*USB interfaces 2728, 2744*" that "*facilitate operative connection of a mobile phone 2734, a compass system 1706, a GPS receiver 752, another navigation device 2740, an access controller 2742 (e.g., a HomeLink® product sold by Johnson Controls, Inc.), a PDA 2746, a media player 2752, a satellite radio, a USB microphone, a wireless USB device 2750, or another portable device that may be brought into vehicle 100 and configured to communicate via USB connection*." EX1029 (Chutorash), 27:1-30; *see also id.*, Figs. 1, 3, and 27-30; 5:29-33 ("*vehicle 100 may include … vehicle control system 106 (e.g., media system, navigational system, entertainment system, display system, communications systems, etc*."). Indeed, Fig. 27 shows at least 8

Microchip Ex. 1013, p. 105
Microchip v. Aptiv
IPR2024-00230

Aptiv Exhibit 2013 Page 105
Microchip v. Aptiv IPR2024-00228

DocuSign Envelope ID: 572DBD26-4FF7-4FA3-B858-2C79783CD24F

separate USB products connected to the control system 106 via the USB interfaces. As a result, a POSITA would have understood that hub(s) were necessary to implement this system.

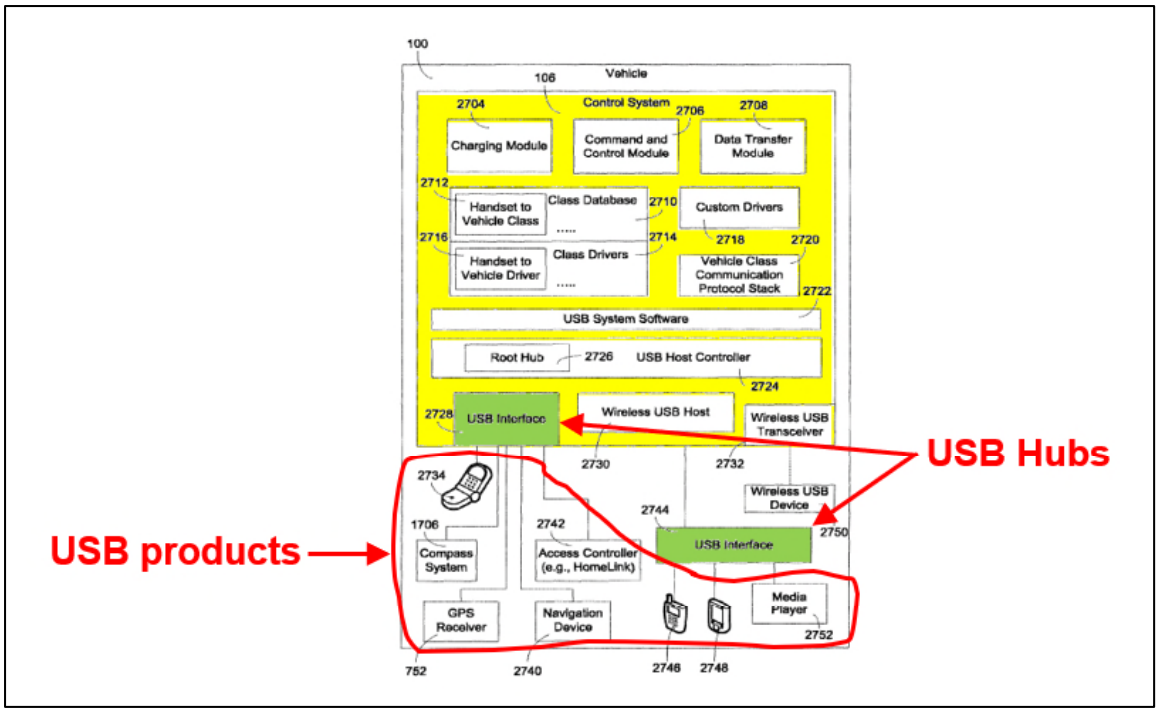

Id., Fig. 27 (annotated).

205. Chutorash does not describe the USB interfaces 2728 or 2744 in detail. But these interfaces connect an upstream host (in vehicle control system 106) to multiple downstream USB devices. Thus, the "*USB Interface[s]*" are USB hubs. *See* §VIII.C. And the very minimum, a POSITA would have found it obvious to use USB hubs for these interfaces.

206. Additionally, a POSITA would have been motivated to use a USB hub with host-to-host capabilities because *"[v]ehicle control system 106 could be*

Microchip Ex. 1013, p. 106
Microchip v. Aptiv
IPR2024-00230

Aptiv Exhibit 2013 Page 106
Microchip v. Aptiv IPR2024-00228

DocuSign Envelope ID: 572DBD26-4FF7-4FA3-B858-2C79783CD24F

classified as an embedded host" and various USB products (*e.g.*, mobile phone 2734, media player 2752, etc.) are precisely the types of products that typically act as USB hosts. EX1029 (Chutorash), 27:1-30. In other words, there will be an upstream host (within vehicle control system 106) that must connect to downstream products that may operate as a host (*e.g.*, mobile phone 2734).

207. Further, Chutorash discloses that the *"[v]ehicle control system 106 may use the USB interface 2728*" for "*command and control*" purposes. EX1029 (Chutorash), 27:12-25; *see also id.*, 13:22-24. For example, *"[v]ideo services 724 of the portable device 116 may be utilized by vehicle control system 106 to provide video decoding and/or playback features to the vehicle*." *Id.*, 14:40-53; *see also id.*, 14:62-67 (discussing gaming applications, including for "*a rear set entertainment system*"), 7:2-10. To a POSITA, these features would have been understood to include functionality of dual-role products (*e.g.*, a smartphone) operating in host mode, and requiring a host-to-host connection.

208. The expectations of users of USB devices make the modified Chang USB hub desirable in a Chutorash deployment environment. In a vehicle, individuals often sit in a certain location, *e.g.*, the backseat. It is desirable to allow each individual the ability to plug a phone (or other USB product) into any USB port in the car, and thus a POSITA would have been motivated to use a hub with dual-role ports to provide this convenient access throughout the vehicle. This is consistent

Microchip Ex. 1013, p. 107
Microchip v. Aptiv
IPR2024-00230

Aptiv Exhibit 2013 Page 107
Microchip v. Aptiv IPR2024-00228

DocuSign Envelope ID: 572DBD26-4FF7-4FA3-B858-2C79783CD24F

with Chutorash's express goal of "*improved user interface features and/or connectivity features relating to vehicle control systems, remote sources, and/or portable devices*." EX1029 (Chutorash), 1:34-36.

209. A POSITA would have had more than a reasonable expectation of success using the modified Chang USB hub in the vehicle control system of Chutorash for several reasons. First, USB products in 2013 were widespread and well understood, and the connection schemes of these elements (a hub to downstream products) was part of the well-known USB standards. *See* §§VI.A, VI.A.1, and VI.A.2. Second, an embedded vehicle control/infotainment systems is similar to a PCs. *See* §VI.D. In other words, the implementation is highly similar to basic USB deployments in the context of PCs.

XI. MOTIVIATION TO MODIFY CHANG IN VIEW OF CHANG II, AN96527, AND THE KNOWLEDGE OF A POSITA

210. A POSITA would have been motivated, and had a high expectation of success, to additionally combine the teachings from Cypress Semiconductor's AN96527 with Chang/Chang II because AN96527 provides an obvious deployment of adjustable power delivery (and the underlying USB-PD standard) for the Chang and Chang II system. In particular, Chang, Chang II, and a POSITA's knowledge discloses a USB hub with a host-to-host bridge and one or more dual-role ports. *See* §IX. AN96527 expressly discloses using adjustable power delivery in a USB hub. *See* §VIII.D; EX1064, 4 ("*Figure 4 shows the power delivery signals of a*

Microchip Ex. 1013, p. 108
Microchip v. Aptiv
IPR2024-00230

Aptiv Exhibit 2013 Page 108
Microchip v. Aptiv IPR2024-00228

DocuSign Envelope ID: 572DBD26-4FF7-4FA3-B858-2C79783CD24F

downstream facing port (DFP), which would be a host ***or a hub*** *and is typically a power provider…*"); 25 ("*This section extends the design of the client board* ***and adds a hub*** *and a collection of other devices that would be found in a docking station*."); 26 (Fig. 31. Data Paths of a Type-C Hub Design) (emphasis added). Accordingly, a POSITA would be motivated to apply AN96527's teachings to Chang and Chang II.

211. **First**, the AN96527 Cypress Application note explains that "*[a]ll USB products, at all speeds, can take advantage of Power Delivery as a power provider, power consumer, or sometimes both …. Up to 100 W can be distributed on a Type-C cable, meaning that even a tablet or notebook can be bus-powered*." EX1064, 1. Thus, the reference itself says that adjustable power delivery applies to "*[a]ll USB products, at all speeds*." *Id*. This certainly includes USB hubs, which were a common type of USB product. Providing power delivery capabilities eliminates the need for having separate wall-socket chargers and also provides the benefit of a reduction in cabling. *Id.*, 13 ("*The result is a single Type-C cable serving all three functions of power, USB data and display*."). Thus, a POSITA would have been motivated to include AN96527's teachings in the modified Crossbar Implementations to achieve better and more convenient USB charging capabilities.

212. **Second**, the USB-PD standards and AN96527 teach a swappable and adjustable power supply delivery system as shown, for example, in Fig. 21 of

Microchip Ex. 1013, p. 109
Microchip v. Aptiv
IPR2024-00230

Aptiv Exhibit 2013 Page 109
Microchip v. Aptiv IPR2024-00228

DocuSign Envelope ID: 572DBD26-4FF7-4FA3-B858-2C79783CD24F

AN96527, which is a flow chart that shows "*power role swap[ping]*" among various voltage and current settings, including "*5V@900mA, 12V@3A, 13V@3A and 20V@3A*." EX1064, 18. Accordingly, in response to changes in power requirements, the system can respond and provide flexible, as-needed power capabilities.

213. **Third**, the AN96527 application note teaches that "*[a] hub now plays a much more important role because it can manage and distribute up to 100 W of power for each Type-C port*," which makes it feasible and convenient for consumers "*to power and/or charge a laptop*" (or other USB product) using just the USB data cable (*i.e.*, there is no need for a separate power cord). EX1064, 25. In my opinion, a POSITA would be motivated to apply the variable power teachings in AN96527 (which are made possible by USB-PD standards) to Chang's modified hub to take advantage of this benefit.

214. Because the purpose of an application note is to teach a POSITA (*e.g.*, an engineer or designer) how to implement the subject matter described in the application note, a POSITA would have had a high expectation of success incorporating AN96527's (and underlying USB-PD teachings) into Chang's hub. As the AN96527 summarizes: "*This application note showed that all forms of Type-C design can be implemented with the CCG1 controller. The reference designs, including full schematics and application software, will get you off to a running*

Microchip Ex. 1013, p. 110
Microchip v. Aptiv
IPR2024-00230

Aptiv Exhibit 2013 Page 110
Microchip v. Aptiv IPR2024-00228

DocuSign Envelope ID: 572DBD26-4FF7-4FA3-B858-2C79783CD24F

start. The examples are based on SuperSpeed, but remember that Type-C Power Delivery is also applicable to USB 2.0 high-speed systems." EX1064, 26; *see also id.* 1 (AN96527 provides "*[w]orking prototype reference designs ... for each application area*"). Moreover, AN96527 expressly teaches its applicability to USB hubs. *See, e.g.*, *id.*, 4 ("*Figure 4 shows the power delivery signals of a downstream facing port (DFP), which would be a host* ***or a hub***.") (emphasis added). The detail provided in AN96527 is more than sufficient to ensure a high expectation of success when implementing its teachings in common USB products, like a USB hub.

XII. CLAIM TERMS

215. I have given the terms in the challenged claims their plain and ordinary meanings, as would have been understood by a person of ordinary skill in the art at the time of the alleged invention, taking into consideration the language of the claims, the specification, and the prosecution history. I have applied these understandings of the claim terms in my analysis and in forming my opinions where appropriate in this Declaration. I specifically address how a POSITA would have understood "embedded USB host" below.

A. "Embedded USB Host"

216. I understand that parties agreed to a stipulated construction for "embedded USB host" in the district court litigation. They agreed that the phrase meant "USB host physically embedded in a vehicle." EX1075, 2.

Microchip Ex. 1013, p. 111
Microchip v. Aptiv
IPR2024-00230

Aptiv Exhibit 2013 Page 111
Microchip v. Aptiv IPR2024-00228

DocuSign Envelope ID: 572DBD26-4FF7-4FA3-B858-2C79783CD24F

217. I agree that, in the context of the ’072 patent, a POSITA would understand the term “*embedded USB host*” to mean “*USB host physically embedded in a vehicle*.” For example, the ’072 patent states that “*[t]he USB Host function is often embedded into a component* ***of the vehicle infotainment system****, such as into the radio or other control module*.” EX1009 (’072 patent), 1:51-53 (emphasis added). Consistent with this, all other references to “*embedded USB host*” in the ’072 patent refer to this host being built (embedded) into a vehicle component. *See id.*, 1:21-23 (“*vehicle electronic systems*”), 1:57-61 (“*vehicle infotainment system can access content …*”), 4:7-11 (“*vehicle’s embedded USB Host system*”), 4:27-30 (“*vehicle’s embedded USB Host*”), 5:50-53, 5:58-60 (“*vehicle’s embedded USB Host (such as a USB Host in a Head Unit)*”), 6:11-13 (“*vehicle’s embedded USB Host*”).

XIII. SUMMARY OF OPINIONS

218. I have been asked to compare the references cited herein to claim 1 of the ’072 patent (the “Challenged Claim”). In my opinion, the Challenged Claim is unpatentable on two Grounds:

- Ground 1: Claim 1 is obvious over Chang in view of Chang II and the knowledge of a POSITA; and
- Ground 2: Claim 1 is obvious over Chang in view of Chang II, Chutorash, and the knowledge of a POSITA.

Microchip Ex. 1013, p. 112
Microchip v. Aptiv
IPR2024-00230

Aptiv Exhibit 2013 Page 112
Microchip v. Aptiv IPR2024-00228

DocuSign Envelope ID: 572DBD26-4FF7-4FA3-B858-2C79783CD24F

219. My substantive analysis in §XIV provides examples of why the Challenged Claim is unpatentable. I reserve the right to cite and rely on additional portions of the prior art in any future declarations or depositions.

XIV. UNPATENTABILITY ANALYSIS

A. Ground 1 (Claim 1): Chang in view of Chang II and the Knowledge of a POSITA Knowledge

1. Claim 1

220. For ease of reference, I provide below annotated color-coded figures showing how the elements of claim 1 map to each of the Mux Implementations of Chang Fig. 3:

Hub 46 Mapping

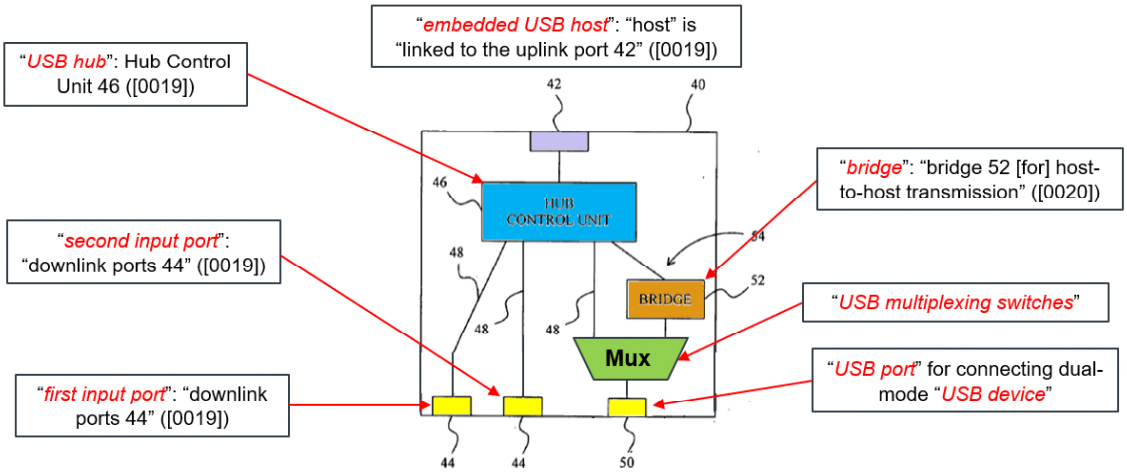

FIG. 3

EX1014 (Chang), Fig. 3 (modified and annotated).

Microchip Ex. 1013, p. 113
Microchip v. Aptiv
IPR2024-00230

Aptiv Exhibit 2013 Page 113
Microchip v. Aptiv IPR2024-00228

DocuSign Envelope ID: 572DBD26-4FF7-4FA3-B858-2C79783CD24F

Hub 40 Mapping

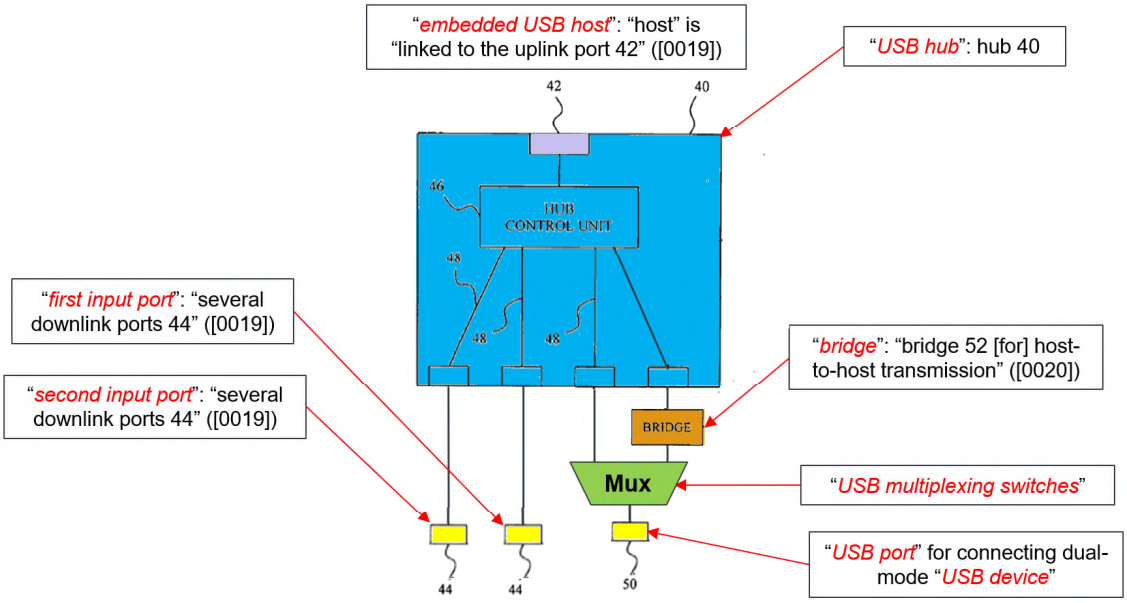

FIG. 3

Id., Fig. 3 (modified and annotated).

a. [Preamble]: "A method, comprising:"

221. As explained in the analysis below, each Mux Implementation of Ground 1 renders obvious all of the method steps of claim 1.

b. 1[a] "providing efficient communications among USB components of a data communication system that includes"

222. The '072 patent does not use the term "*efficient communication*" in the specification, nor does the '072 patent otherwise describe what communication qualifies as "*efficient communication*" versus "inefficient communication." While I have not analyzed the contours of "efficient" communication, both Chang and Chang II explicitly disclose providing "*efficient communication*." Chang explains that

Microchip Ex. 1013, p. 114
Microchip v. Aptiv
IPR2024-00230

Aptiv Exhibit 2013 Page 114
Microchip v. Aptiv IPR2024-00228

DocuSign Envelope ID: 572DBD26-4FF7-4FA3-B858-2C79783CD24F

utilizing a host-to-host "*communication channel between two computers*" makes communication "*simpler and* ***more efficient***." EX1014 (Chang), [0002] (emphasis added). In similar fashion, the Background section of Chang II explains that its "*bridge device*" is intended to help users to "*conveniently and* ***efficiently proceed to transfer data*** *between two computer host[s]*." EX1015 (Chang II), [0010] (emphasis added). Chang II goes on to state that its "*design will attend high* ***transfer efficiency***." *Id.*, [0046] (emphasis added). These passages provide more disclosures of "*efficient communication*" than anything found in the '072 specification. Further, a POSITA understood that while "efficient" has no specialized technical meaning, the designs in Chang and Chang II enhance the efficiency of USB communications and do not degrade the efficiency already present in USB communication.

223. The '072 specification provides no embodiments or examples other than USB communication systems that include "USB components" such as a USB bridge (for host-to-host communication), USB hub, and a bypass path (for host-to-device communication). *See generally* EX1009. Based upon this disclosure, it is my opinion that one example of "*efficient communication*" the '072 patent is claiming includes USB communications among these components as recited in claim 1. As I describe below, each Mux Implementation of Ground 1 renders obvious this same USB communication system with these USB components of claim 1.

Microchip Ex. 1013, p. 115
Microchip v. Aptiv
IPR2024-00230

Aptiv Exhibit 2013 Page 115
Microchip v. Aptiv IPR2024-00228

DocuSign Envelope ID: 572DBD26-4FF7-4FA3-B858-2C79783CD24F

224. As I describe below, each Mux Implementation of Ground 1 render obvious the balance of the claim which recites "*a data communication system that includes*" each component of claim 1. For example, Chang discloses that its system communicates "*data*" in the context of USB communication. EX1014 (Chang), [0002], [0017]; *see also* EX1015 (Chang II), [0046]. USB uses two balanced data signal lines to communicate data. *See* §VI.A; EX1018, Chapter 7. Each Mux Implementation of Ground 1 communicates data over these USB lines.

225. Accordingly, Ground 1 renders obvious "*providing efficient communications among USB components* [Chang and Chang II disclose 'efficient' USB communication, and Ground 1 renders obvious the same USB configuration of the '072 embodiments] *of a data communication system that includes* [Chang discloses communication 'data,' and Ground 1 renders obvious the components of claim 1]."

c. 1[a][i] "a first input port, second input port, a USB hub, a USB bridge connected to the USB hub,"

226. Each Mux Implementation satisfies sub-element 1[a][i]. The downstream ports 44 in Chang are examples of a "*first input port*" and "*a second input port*." EX1014 (Chang), [0019]-[0020]. Chang describes downstream port 44 as "*downlink ports*" and downstream port 50 as "*host port 50*." *Id.* A POSITA would have understood Chang's ports 44 as standard hub DFPs (downward facing ports) while port 50 is also a port that connects a downstream host to a standard hub

DocuSign Envelope ID: 572DBD26-4FF7-4FA3-B858-2C79783CD24F

DFP through the bridge. A POSITA would have further understood that ports 44 correspond to the claimed "*first input port*" and "*second input port*" because of their function in the context of a USB hub.

Hub 46 Mapping

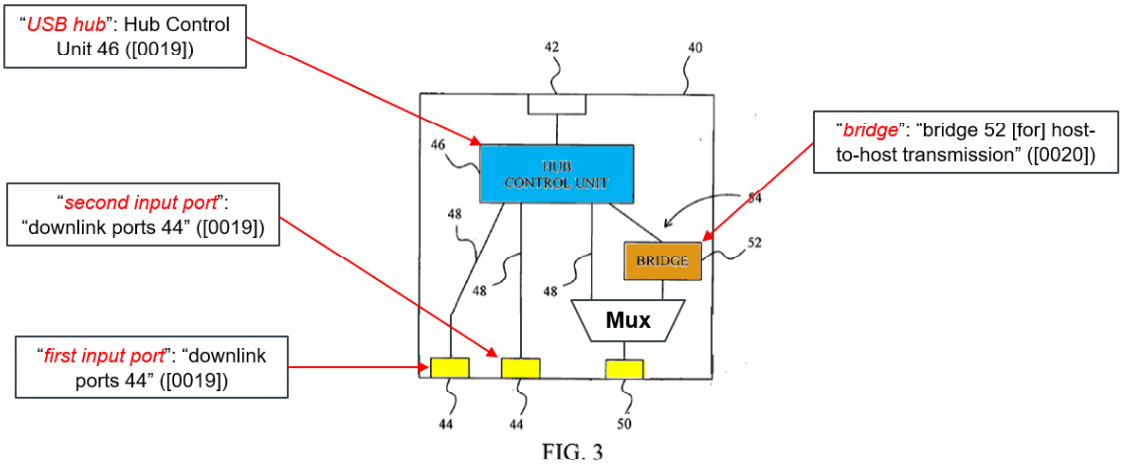

Id., Fig. 3 (modified and annotated).

227. Chang discloses "*a USB hub*," *i.e.*, Hub Control Unit 46. EX1014 (Chang), [0019]. Specifically, Chang discloses "*a hub control unit 46 for establishing several transmission paths 48 between the uplink port 42 and downlink ports 44 such that the host linked to the uplink port 42 can communicate with the devices linked to the downlink ports 44.*" *Id.*

228. Chang refers to a "*hub 40*," but the Hub Control Unit 46 itself satisfies the limitation "*USB Hub*," because Hub Control Unit 46 is what provides communication between upstream and downstream entities (*e.g.*, an upstream host

Microchip Ex. 1013, p. 117
Microchip v. Aptiv
IPR2024-00230

Aptiv Exhibit 2013 Page 117
Microchip v. Aptiv IPR2024-00228

DocuSign Envelope ID: 572DBD26-4FF7-4FA3-B858-2C79783CD24F

and downstream devices). This understanding of hub is consistent with the USB specification and the specification of the ’072 patent.

229. The USB 2.0 provides an overview of “hub” as “*[a] USB device that provides additional connections to the USB*.” EX1018, 34. In other words, a hub provides communication between upstream and downstream entities. This is clearly shown in Figure 3 of Chang, where the USB Hub connects a single upstream port with multiple downstream ports.

230. The specification of the ’072 patent also describes a “hub” similarly. With respect to the Figure 4 embodiment, the specification describes that “*[t]he USB Hub is preferably provided in the form of an integrated circuit (IC)*” and includes “USB ports.” EX1009 (’072 patent), 5:56-65, Figure 4. Separately, the specification describes a “*USB Hub Module*” that includes, for example, the USB Hub IC and Bridge IC. *Id.*, 5:61-6:8, Fig. 4. Thus, “*a USB hub*” does not require a physical enclosure around the component(s) and ports that comprise the hub, but instead refers to the hub logic that provides additional connections to an upstream USB host. With respect to the embodiment of Fig. 5, the ’072 patent illustrates a “*USB Hub*” by drawing a box around the hub’s functionality (the hub logic that provides additional connections to an upstream host). *Id.*, 7:15-21, Fig. 5. Specifically, in Figure 5, the “*USB Hub*” is a portion of “*Combo USB Hub/Bridge IC*,” namely, the “*USB hub digital logic*.” This “*USB hub digital logic*” is what provides the

Microchip Ex. 1013, p. 118
Microchip v. Aptiv
IPR2024-00230

Aptiv Exhibit 2013 Page 118
Microchip v. Aptiv IPR2024-00228

DocuSign Envelope ID: 572DBD26-4FF7-4FA3-B858-2C79783CD24F

additional connections to the upstream host. In other words, while the "*Combo USB Hub/Bridge IC*" of Figure 5 includes a hub, bridge, and switch all on a single IC, the "hub" is the digital logic that performs the USB Specification hub functionality of providing bidirectional communication between upstream and downstream entities.

231. Finally, the file history of the '037 patent (which is the first patent in the family chain) is consistent with this understanding of a hub. The Examiner stated that "*the USB switching hub 119 of Bohm discloses* ***the function of claimed hub.***" EX1002, 141 (emphasis added). Thus, the Examiner understood the claimed "*hub*" to refer to the functionally of the hub, *i.e.*, providing communication between upstream and downstream entities.

232. In sum, Hub Control Unit 46 of Chang is a "hub" in the context of the '072 patent.

233. Chang discloses bridge 52: "*The bridge 52 provides a function for host-to-host communications, and may be implemented with a bridge chip for example OTi2108 of Ours Technology Inc. or other host-to-host transmission chip*." EX1014 (Chang), [0020]. I describe host-to-host bridges in §IV.C. As shown below, Chang discloses each component of 1[a][i]:

Microchip Ex. 1013, p. 119
Microchip v. Aptiv
IPR2024-00230

Aptiv Exhibit 2013 Page 119
Microchip v. Aptiv IPR2024-00228

DocuSign Envelope ID: 572DBD26-4FF7-4FA3-B858-2C79783CD24F

Hub 40 Mapping

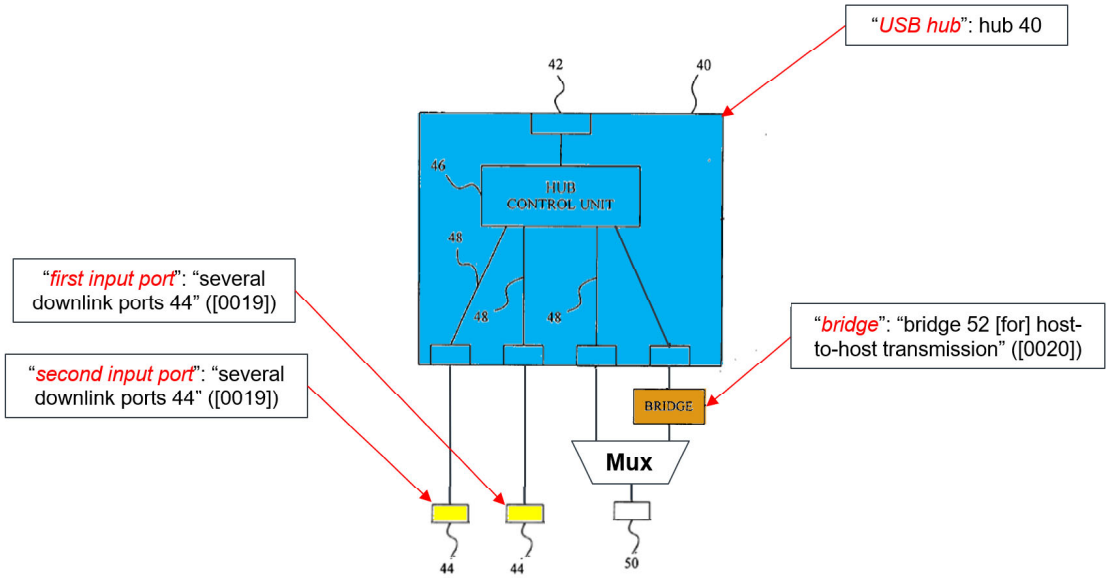

FIG. 3

Id., Fig. 3 (modified and annotated).

234. Ground 1's Mux Implementation with Chang's USB hub 40 as the claimed "*USB hub*" satisfies element 1[a][i]. A POSITA would have understood the USB hub 40 as corresponding to either the end user hub product or a hub chip on a PCB (this latter case making integration easier with the other parts of the system). It would have been obvious for a POSITA to modify Chang such that the bridge is a separate physical component located outside of Chang's hub unit 40 for several reasons.

235. ***First***, Chang recognizes that it is "*possible to integrate*" the bridge into the hub control unit. EX1014 (Chang), [0022]. Accordingly, Chang also teaches that one could locate the bridge elsewhere, and a POSITA would have understood

DocuSign Envelope ID: 572DBD26-4FF7-4FA3-B858-2C79783CD24F

that locating the bridge outside of USB hub 40 was simply a design choice from a given number of possible locations. Locating the bridge outside of USB hub 40 is consistent with Chang II, because Chang II discloses a bridge and bypass outside of any hub. EX1015 (Chang II), Figs. 1, 3, 5, [0023], [0029]. For example, in the cable embodiment of Chang II Fig., 3, one end of the cable (*viz.*, this would be the first interface 11) could be plugged into a USB hub with the other end (*viz.*, this would be the second interface 12) connected to a downstream consumer dual-role device. Even when the first interface controller 131 "*functions like a USB hub chip*" (*id.*, [0040]), the bridge function (second USB controller 132) and bypass are located outside of the first interface controller 131.

236. ***Second***, a POSITA would have had experience performing USB product development with hubs and understood that the points of integration and connection include: (a) on a PCB with a standard USB hub chip and (b) by combining the hub with other functions on a single chip. Accordingly, adding the bridge and switch outside of the hub product 40 was a conventional integration technique with hubs.

237. ***Third***, locating the bridge and switch external to hub 40, *e.g.*, using an external connection to a hub downstream port, provides important advantages. Specifically, this would enable using a conventional hub without modification. Chang specifically recognizes the ability to use a conventional hub and adding the

Microchip Ex. 1013, p. 121
Microchip v. Aptiv
IPR2024-00230

Aptiv Exhibit 2013 Page 121
Microchip v. Aptiv IPR2024-00228

DocuSign Envelope ID: 572DBD26-4FF7-4FA3-B858-2C79783CD24F

bridge to the conventional hub. EX1014 (Chang), [0024]. This allows for minimal modifications to legacy designs. That is, one can simply use a prior art, conventional hub and add downstream to it the bridge and switching functionality. This also would provide for easier sourcing of components. Specifically, rather than requiring a custom hub, one could simply source a conventional hub and add the additional functionality (bridge and switching components). Finally, using a conventional hub would be routine. For example, one would only need to connect the bridge and switching functionality to one or more of the hub downstream ports (*e.g.*, a bridge transmission cable to one or more of the conventional hub's downstream ports).

238. Under this obvious implementation, the bridge is external to physical hub structure 40 and the first and second inputs are ports 44. *See* EX1014 (Chang), [0019] (describing "*downlink ports 44 such that the host linked to the uplink port 42 can communicate with the devices linked to the downlink ports 44*"), [0020] ("*[T]he host linked to the uplink port 42 can communicate with the host linked to the host port 50*."). Note that the function of the bridge is unchanged in this mapping. The bridge would in all cases appear to the downstream USB host as a USB device and to the internal, upstream host like a USB device. *See* §VI.C (discussing function of a bridge, namely, providing a device interface for each host).

DocuSign Envelope ID: 572DBD26-4FF7-4FA3-B858-2C79783CD24F

d. 1[a][ii] "an embedded USB host connected to the USB hub,"

239. Each Mux Implementation of Ground 1 renders this limitation obvious. A POSITA would have understood "*embedded USB host*" in the context of the Challenged Patent to at least encompass a "USB host built into a vehicle." *See* §XII.A. Ground 1 renders obvious that an embedded host, such as a USB host built into a vehicle infotainment system, would connect to Ground 1's upstream port (*see* port 42 of Chang).

240. ***First***, the '072 patent recognizes the use of USB hubs in vehicle infotainment systems was already known, and in this context, "*[t]he USB Host function is often embedded into a component of the vehicle infotainment system, such as into the radio or other control module*." EX1009 ('072 patent), 1:51-53. Using USB hub in vehicles was well-known and had well-known advantages. *See* §VI.D. Accordingly, a POSITA viewing Chang would have understood its application to the vehicle context and would have found it obvious to use Chang's system in a vehicle (and would have been motivated to do so). More particularly, it would have been obvious to connect Chang's system (and this Ground's modified Chang/Chang II hub) to an embedded host in the vehicle context.

241. ***Second***, the '072 patent also recognizes that there was a need for the vehicle infotainment system to connect to downstream hosts. EX1009 ('072 patent), 2:41-3:20. As I describe in §VI.B, this is because of the growth in consumer dual-

Microchip Ex. 1013, p. 123
Microchip v. Aptiv
IPR2024-00230

Aptiv Exhibit 2013 Page 123
Microchip v. Aptiv IPR2024-00228

DocuSign Envelope ID: 572DBD26-4FF7-4FA3-B858-2C79783CD24F

role products. Chang addresses this need by providing a host-to-host bridge. The bridge enables a downstream host to connect to an upstream host. For this additional reason, it would have been obvious to, and a POSITA would have been motivated to, connect Chang's system (and this Ground's modified Chang/Chang II hub) to an embedded host.

242. ***Third***, a POSITA would have understood Chang's disclosures to include using the Chang system with an embedded host, and certainly would have found it obvious. Chang discloses that a "host" is "*linked to the uplink port 42*." EX1014 (Chang), [0019]. Chang depicts a standardized USB cable connection to the upstream host. Accordingly, a POSITA would have understood that Chang may connect to an embedded host via the USB link to connect to the upstream embedded host. Chang's disclosure is thus more general than the '072 patent, as Chang does not limit its disclosure to any particular type of host. Specifically, Chang broadly discloses its invention in the context of a USB hub that allows for a host-to-host connection, not limited to a particular upstream host. *Id.*, [0001], [0003], [0020]. Accordingly, a POSITA would have recognized that Chang is applicable to any system that employs a USB hub, including a vehicle infotainment system with an embedded host. Further, a POSITA would have been particularly motivated to consider Chang's system for use in a vehicle infotainment system because Chang's system provides for a host-to-host connection, and the host-to-host connection

Microchip Ex. 1013, p. 124
Microchip v. Aptiv
IPR2024-00230

Aptiv Exhibit 2013 Page 124
Microchip v. Aptiv IPR2024-00228

DocuSign Envelope ID: 572DBD26-4FF7-4FA3-B858-2C79783CD24F

addresses the need for a host-to-host connection in view of dual-role products in vehicle deployments.

243. ***Fourth***, Chang provides examples that suggest its use with a vehicle infotainment system. In this context, vehicle infotainment systems include host computer systems and connect to, among other things, smartphones (which are akin to computer systems as well) via downstream ports. EX1009 ('072 patent), 1:62-3:5; EX1029 (Chutorash), 5:27-7:34 (describing "*vehicle control system 106*," *e.g.*, a vehicle infotainment system); EX1049, 1 ("*the car has become a PC on wheels*"). Vehicle infotainment systems generally use an upstream host while smart phones may operate as either a host or device. Chang provides an example of an upstream host computer (analogous to a vehicle infotainment system) that connects to downstream products, suggesting application to the vehicle environment. EX1014 (Chang), Fig. 4, [0023]-[0024].

244. Using Chang's system with an embedded host, such as one in a vehicle infotainment system, was highly predictable and would occur naturally to a POSITA. For example, the implementation would merely require arranging the hub, *e.g.*, in the front end of the vehicle, with wiring to downstream ports throughout the vehicle. As outlined in EX1049 ("*PC on Wheels*"), the use of USB in vehicles came about naturally as a result of the auto makers responding to the request for features

Microchip Ex. 1013, p. 125
Microchip v. Aptiv
IPR2024-00230

Aptiv Exhibit 2013 Page 125
Microchip v. Aptiv IPR2024-00228

DocuSign Envelope ID: 572DBD26-4FF7-4FA3-B858-2C79783CD24F

from their customers. Specifically, given the widespread use of personal USB devices, using USB in vehicles was a natural fit. *See* §VI.D.

245. If the Board determines that "*embedded USB host*" does not require that the host be built into a vehicle, Chang and Chang II each expressly disclose this limitation. Specifically, Chang and Chang II disclose USB host support and this includes, under USB specifications, support for an embedded USB host where hubs are supported (which is the case here). *E.g.*, EX1014 (Chang), Fig. 4, [0023]; EX1015 (Chang II), Fig. 4. Moreover, Chang discloses a PC connecting to the upstream port, and PCs were well known to have a built-in USB host function. EX1014 (Chang), Fig. 4, [0023]. For example, the PC in Chang's example would be understood to include a built-in, dedicated host because Chang describes the PC connecting to the hub. *Id.* Chang II also discloses "*build[ing] the data transmission bridge device 1 directly within a first host device 2 (such as a notebook computer), and the first connection interface 11 is internally and directly connected with the host processor unit 21 of the first host device 2. In other words, the first connection interface 11 is permanently attached to the first host device 2*." EX1015 (Chang II), [0031]. Hence, this host is embedded in the first host device, such as a notebook computer.

Microchip Ex. 1013, p. 126
Microchip v. Aptiv
IPR2024-00230

Aptiv Exhibit 2013 Page 126
Microchip v. Aptiv IPR2024-00228

DocuSign Envelope ID: 572DBD26-4FF7-4FA3-B858-2C79783CD24F

246. A POSITA would have understood that the existence of a USB hub, such as in Chang, implies the existence of a local USB host, such as an embedded host. The hub has no function of any kind if it is not connected to an upstream host.

247. Accordingly, Ground 1 renders obvious "*an embedded USB host connected to the USB hub*." The "*embedded USB host*" mapping does not change regardless of whether Chang's "*hub 40*" or "*hub control unit 46*" is mapped to the claimed hub because in both cases the embedded USB host connects to the hub's upstream port.

e. 1[a][iii] "a USB port connected to a USB device capable of operating in a USB Host mode and a USB device mode, and USB multiplexing switches connected to the USB port, the USB hub, and the USB bridge":

248. As I discuss in §IX, Ground 1 modifies Chang to include a dual-role mode USB port (*i.e.*, "*a USB port*") that connects to a dual-role USB product (*viz.*, "*a USB device capable of operating in a USB Host mode and a USB device mode*"). For instance, Chang II discloses that "*the main feature is the provision of two different transmission paths, so that* ***by automatically detecting the type of device connected (host or slave)*** *the present invention can switch to the proper transmission path*." EX1015 (Chang II), [0021] (emphasis added). Chang II's references to a "*host or slave*" would have been understood by a POSITA to correspond to a USB host and USB device, respectively.

Microchip Ex. 1013, p. 127
Microchip v. Aptiv
IPR2024-00230

Aptiv Exhibit 2013 Page 127
Microchip v. Aptiv IPR2024-00228

DocuSign Envelope ID: 572DBD26-4FF7-4FA3-B858-2C79783CD24F

249. Also, a POSITA would have understood Chang II's use of "*transmission path*" as a functional description, and not an explicit reference to an electrical "*transmission line*." *Cf.* EX1069, 32-34 (§13.09, "Transmission lines"). Chang II discloses a single port (the second interface) that supports a connection to either a "*Second Host Device*" or a "*Slave Device*" when communicating with a "*First Host Device*." *See* EX1015 (Chang II), [0030], [0032], Figures 1-2. As can be seen in Figure 2, there is a single set of USB lines (*e.g.*, data line DM_B and DP_B) for connecting to the downstream product. *Id.*, Fig. 2. Chang II further discloses: "*In practical design, the second connection interface 12 can also directly adopt an A-Type male connector and a B-Type male connector of USB specification to achieve dual connector type design*." *Id.*, [0030]. This scheme makes use of USB's Hot Plug mechanism, where USB ports did not have to be assigned to specific peripheral devices. This extends to the device discovery and instantiation requirements which, as discussed in §VI.A.1, includes the exchange of messages where the host "reads" the device Descriptors and sends a command to start the device communication with its associated device driver.

250. A POSITA would have understood (and certainly found it obvious) that connecting a dual-role product to Chang II's second interface was within the scope of Chang II's disclosure. Certain embodiments of Chang II contemplate connecting a dedicated host product or dedicated device product to the second interface. *E.g.*,

Microchip Ex. 1013, p. 128
Microchip v. Aptiv
IPR2024-00230

Aptiv Exhibit 2013 Page 128
Microchip v. Aptiv IPR2024-00228

DocuSign Envelope ID: 572DBD26-4FF7-4FA3-B858-2C79783CD24F

EX1015 (Chang II), Figure 6 ("*S601*": "*Connect a first host device and an external device*"; "*S607*" "*The external device is a second host device*"). Chang II, however, also discloses that "*other combinations and other connector types are too numerous to list, but those connector types covered under USB specification is all within the scope of the present invention*." *Id.*, [0030]. A POSITA would have understood this disclosure to include, for example, the well-known "Micro-AB" connector (and other known connectors) that accepted host, device, and/or dual-mode products. *See, e.g.*, EX1022, 13 (OTG "*provides both host and peripheral capabilities over a single Micro-AB receptacle*"); *see also* EX1070 (Micro-USB). While the Micro-USB connectors were first created with a view to OTG, they have been used in a wide variety of non-OTG environments and are consistent with Chang II's teachings.

251. In addition, Chang II explains that it "*automatically and periodically*" performs a host/device check so "*control chip 13 can respectively switch to the bridge transmission path or the bypass path*." EX1015 (Chang II), [0024]. In this regard, Chang II discloses that "*checking whether the user has exchanged for other external device* ***would occur constantly***." *Id.*, Fig. 6 (step 613 and 625), [0043] (emphasis added).

252. In other words, Chang II supports being able to dynamically detect the mode of the downstream product. And Chang II's disclosure regarding "*constantly*," "*periodically*," and "*automatically*" checking whether a host or device is

Microchip Ex. 1013, p. 129
Microchip v. Aptiv
IPR2024-00230

Aptiv Exhibit 2013 Page 129
Microchip v. Aptiv IPR2024-00228

DocuSign Envelope ID: 572DBD26-4FF7-4FA3-B858-2C79783CD24F

connected—together with a POSITA's knowledge of the numerous dual-role products available (*see* §VI.B) that "*change roles dynamically*" (EX1009 ('072 patent), 3:21-27; *see also* EX1025 (Castleberry), 4:17-22)—render it obvious to a POSITA to periodically recheck host/device status.

253. A POSITA would have understood that the dual-role product could effectively disconnect and reconnect (*see* §VI.A.1) as part of the role switch, similar to Chang II's disclosure of when a user connects a new device. The use of dual-role products and detecting the mode of dual-role products was well understood before the priority date of the Challenged Patents. *See* §VI.B. Accordingly, a POSITA would have Chang II's teaching to support dual-role products.

254. Because of the "one port for all" design goal of USB, Chang II's addition of a special dual-role port would naturally suggest scaling that scheme to multiple ports. A POSITA would have understood that the value of this approach to the end user more than justifies the additional circuitry. Thus, it would be obvious to implement all of Chang downstream ports as dual-role ports.

255. Because of the importance of dual-role mode USB ports, it would have been obvious to include "*USB*[12] *multiplexing switches connected to the USB port,*

[12] That these switches are "***USB*** multiplexing switches" stems from the fact that it switches the "USB" lines.

Microchip Ex. 1013, p. 130
Microchip v. Aptiv
IPR2024-00230

Aptiv Exhibit 2013 Page 130
Microchip v. Aptiv IPR2024-00228

DocuSign Envelope ID: 572DBD26-4FF7-4FA3-B858-2C79783CD24F

the USB hub, and the USB bridge" to route a downstream USB product to the appropriate path. *See* §IX and §VI.B.2. For example, Chang II discloses "*switch[ing] to select one of the two transmission paths*." EX1015 (Chang II), Abstract. As I describe below, it would be obvious to include in Chang two "*transmission paths*": one path would include a bridge and the other path would bypass the bridge.

256. Chang II discloses a detection unit 134 and bypass circuit unit 133:

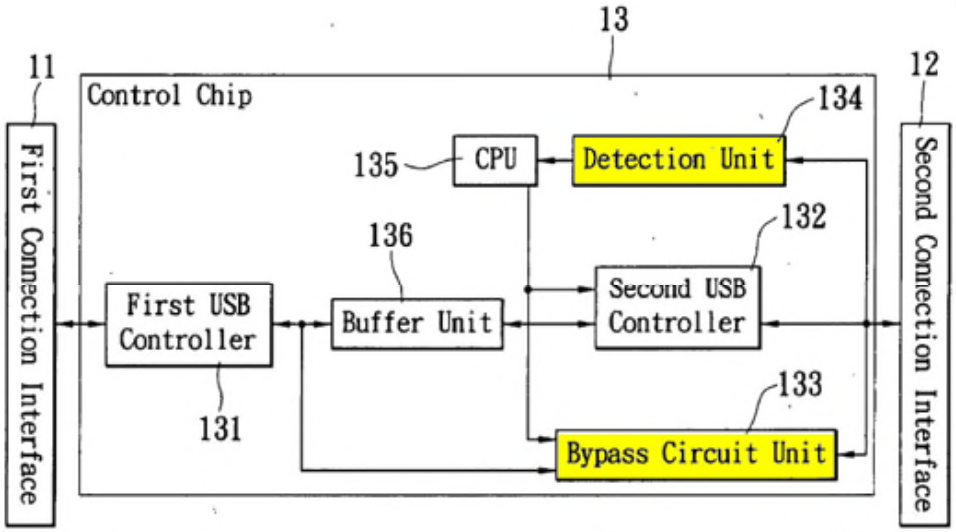

FIG. 5

EX1015 (Chang II), Fig. 5 (annotated).

257. In Chang II, "*the second USB controller 132 coupled [via Buffer Unit 136] with the first USB controller 131 forms a transmission bridge*," and this bridge provides for host-to-host communication between the first interface (host) and second connection interface (host). EX1015 (Chang II), [0036]. But when a non-

Microchip Ex. 1013, p. 131
Microchip v. Aptiv
IPR2024-00230

Aptiv Exhibit 2013 Page 131
Microchip v. Aptiv IPR2024-00228

DocuSign Envelope ID: 572DBD26-4FF7-4FA3-B858-2C79783CD24F

host USB product connects to the second interface, "*a direct connection between the first USB controller 131 and the second connection interface 12 can be made*," and this provides for host-to-device communication between the first interface (host) and second interface (device). *Id.*, [0037], *see also id.*, [0038]-[0040]; [0044] (describing "*bypass path*"). As can be seen above, the "*bypass*" provides a path around the bridging function, and Chang II teaches switching between the two transmission paths depending on the type of consumer unit (host or device). I describe in ¶188 that these paths would be understood to involve the function of a switch to avoid conflicting signals on the same electrical connection.

258. I demonstrate in §VI.B.2 and §IX that switching between transmission paths was extremely well-known, highly predictable, and routine to implement. A POSITA would have recognized that Chang II's detection and switch functionality is a natural combination with Chang to implement dual-role ports in Chang. There were numerous, well-known USB multiplexing switching products that were available by 2013. *See* EX1059; EX1060; EX1068. In view of these teachings, it would have been obvious to employ, for example, multiplexing switches in Chang to switch between the bridge path (when a host connects) or bypass route around the bridge (when a device connects).

259. A USB connection includes two data lines (D+ and D-) that operate as a differential pair. Thus, typical USB switches will technically include at least two

Microchip Ex. 1013, p. 132
Microchip v. Aptiv
IPR2024-00230

Aptiv Exhibit 2013 Page 132
Microchip v. Aptiv IPR2024-00228

DocuSign Envelope ID: 572DBD26-4FF7-4FA3-B858-2C79783CD24F

switches, *e.g.*, to switch (select) among D+ lines and to switch (select) among D- lines:

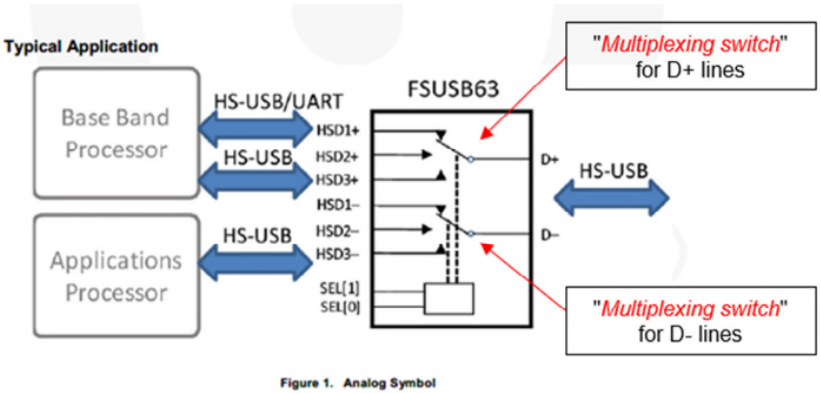

EX1060, Fig. 1 (annotated).

260. Accordingly, it would have been obvious to modify Chang to include a "*USB port*" (dual-role port), "*USB device*" (dual-role product), and "*USB multiplexing switches*" (to select the transmission path). Such a modification to Chang would result in a well-understood improvement to the product in keeping with USB design goals.

Microchip Ex. 1013, p. 133
Microchip v. Aptiv
IPR2024-00230

Aptiv Exhibit 2013 Page 133
Microchip v. Aptiv IPR2024-00228

Hub 46 Mapping

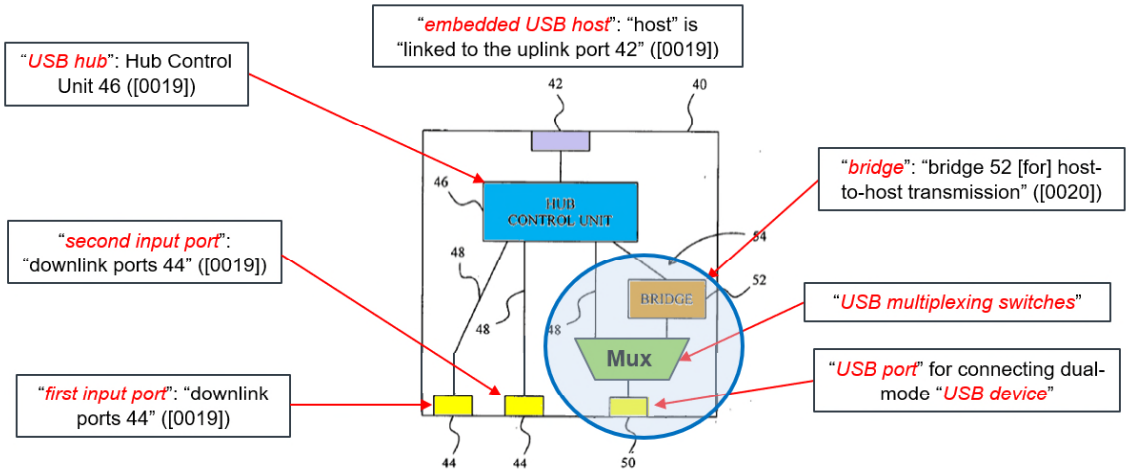

FIG. 3

EX1014 (Chang), Fig. 3 (modified and annotated).

Hub 40 Mapping

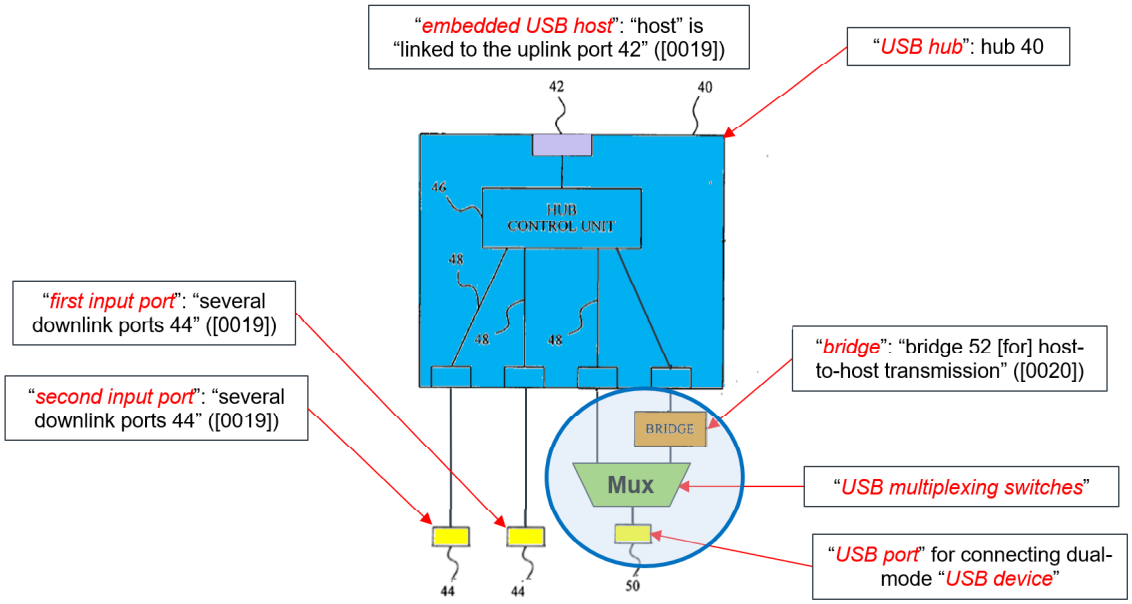

FIG. 3

Id., Fig. 3 (modified and annotated).

DocuSign Envelope ID: 572DBD26-4FF7-4FA3-B858-2C79783CD24F

f. 1[b] "receiving a first USB signal from the USB device[13] via the USB port while the USB device is operating in the USB host mode;"

261. Each Mux Implementation of Ground 1 renders element 1[b] obvious. Chang plainly discloses connecting a USB host to port 50. *See* EX1014 (Chang), Fig. 4 ("*HOST 70*"). So does Chang II. *See* EX1015 (Chang II), Fig. 1 ("*Second Host Device*"). Chang discloses support for host-to-host communication through "*a host-to-host transmission path 54 [that] may be established such that the uplink port 42 may communicate with the host port 50*." EX1014 (Chang), [0020]. In other words, a USB product ("*device*"[14]) sends USB signals to host port 50. *Id.* Note again that a POSITA would have understood the reference here to "*transmission path*" as a functional reference, and that there would be a corresponding actual communications path.

---

[13] A POSITA would understand that this reference to a "*USB device*" is generic, and refers to a USB ***product***. This is apparent from the rest of the claim element that specifically says that the "*USB device*" is "*operating in the USB* ***host mode***."

[14] My discussion for sub-element 1[a][iii] demonstrates that it would have been obvious for the USB product that connects to host port 50 to be a dual-role port that supports dual-role products.

Microchip Ex. 1013, p. 135
Microchip v. Aptiv
IPR2024-00230

Aptiv Exhibit 2013 Page 135
Microchip v. Aptiv IPR2024-00228

DocuSign Envelope ID: 572DBD26-4FF7-4FA3-B858-2C79783CD24F

262. As my analysis in §IX and sub-element 1[a][iii] demonstrate, a POSITA would have found it obvious to modify Chang to include a dual-role port ("*a USB port connected to a USB device capable of operating in a USB Host mode and a USB device mode*") to support dual-mode USB products. Under this obvious modification, the dual-role port "*receiv[es] a first USB signal from the USB device via the USB port while the USB device is operating in the USB host mode*." Specifically, when the dual-mode product operates in host mode, the product sends USB communication through the dual-role USB port (which travels through the bridge and to the upstream host).

g. 1[c] "routing the first USB signal via the USB multiplexing switches from the USB device[15] to the embedded USB host through the USB bridge and the USB hub;"

263. Each Mux Implementation of Ground 1 renders claim element 1[c] obvious. In particular, Chang II describes creating "*a detection signal (bridging detection signal or slave detection signal)*" and "*then according to the detection signal control[ling] the operation of either the second USB controller 132 or the bypass circuit unit 133*." EX1015 (Chang II), [0038]. In other words, depending on the detection signal (detecting a host or device), a "*Transmission path*" is chosen.

[15] As noted foe claim element 1[b], a POSITA would understand that this reference to the "*USB device*" is generic, and refers to a USB ***product***.

Microchip Ex. 1013, p. 136
Microchip v. Aptiv
IPR2024-00230

Aptiv Exhibit 2013 Page 136
Microchip v. Aptiv IPR2024-00228

DocuSign Envelope ID: 572DBD26-4FF7-4FA3-B858-2C79783CD24F

Id., [0021]. A POSITA would have understood the "*detection signal*" as host/device differentiation. Applying these teachings to Chang, it would have been obvious that upon detection of the consumer product in host mode, the switch would connect port 50 to the bridge. My analysis for sub-element 1[a][iii] explains that, upon detecting a product in host mode, it would be obvious to implement the switch to route the USB signals to the embedded host through the bridge. A host-to-host connection requires a bridge, and thus when detecting the host, it would be necessary to route the USB signals to the bridge (as Chang uses the bridge to enable host-to-host communication). Accordingly, this forms a host-to-host connection between the embedded host to the downstream product (through the bridge) when the downstream product is operating in host mode.

264. The red arrows in the figures below illustrate the routing through the bridge for each Mux Implementation:

Microchip Ex. 1013, p. 137
Microchip v. Aptiv
IPR2024-00230

Aptiv Exhibit 2013 Page 137
Microchip v. Aptiv IPR2024-00228

DocuSign Envelope ID: 572DBD26-4FF7-4FA3-B858-2C79783CD24F

Hub 46 Mapping

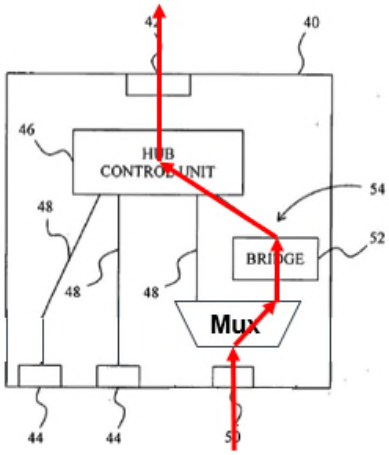

FIG. 3

EX1014 (Chang), Fig. 3 (modified and annotated).

Hub 40 Mapping

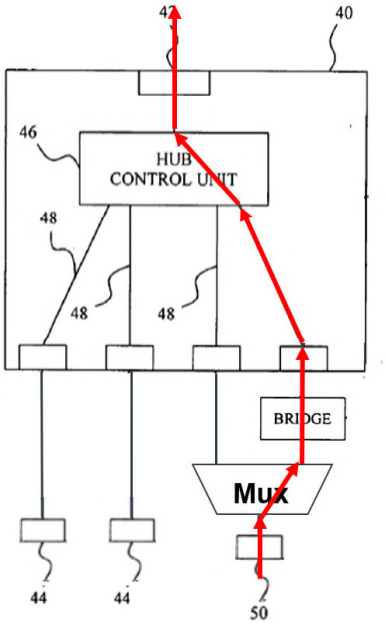

FIG. 3

Id., Fig. 3 (modified and annotated).

Microchip Ex. 1013, p. 138
Microchip v. Aptiv
IPR2024-00230

Aptiv Exhibit 2013 Page 138
Microchip v. Aptiv IPR2024-00228

DocuSign Envelope ID: 572DBD26-4FF7-4FA3-B858-2C79783CD24F

h. 1[d] "receiving a second USB signal from the USB device via the USB port while the USB device is operating in the USB device mode; and"

265. Each Mux Implementation of Ground 1 renders element 1[d] obvious. Chang II discloses connecting a USB device to its dual role port. EX1015 (Chang II), Fig. 1 ("*Slave Device 4*"). Chang discloses "*several transmission paths 48 between the uplink port 42 and downlink ports 44*." EX1014 (Chang), [0019]. In other words, a USB product ("*device*")[16] sends USB signals to downlink port 44. *Id.*

266. My discussion in §IX and 1[a][iii] demonstrates that it would have been obvious to modify Chang to include a dual-role port ("*a USB port connected to a USB device capable of operating in a USB Host mode and a USB device mode*"), like the one in Chang II to support dual-mode USB products. As described for element 1[a][iii], Ground 1 discloses (or at least renders obvious) the use of a dual-role products (which were well-known to switch between host/device roles). Under this obvious modification, the dual-role port "*receiv[es] a second USB signal from the USB device via the USB port while the USB device is operating in the USB device mode*." Specifically, when the dual-mode product operates in device mode, the

[16] My discussion for sub-element 1[a][iii] demonstrates that it would have been obvious for the USB product that connects to host port 50 (or port 44) to be a dual-role port that supports dual-role products.

Microchip Ex. 1013, p. 139
Microchip v. Aptiv
IPR2024-00230

Aptiv Exhibit 2013 Page 139
Microchip v. Aptiv IPR2024-00228

DocuSign Envelope ID: 572DBD26-4FF7-4FA3-B858-2C79783CD24F

product sends USB communication through the dual-role USB port, bypasses the bridge and travels directly to a local hub port on hub control unit 46.

i. 1[e] "routing the second USB signal via the USB multiplexing switches from the USB device to the embedded USB host through the USB hub, wherein the second USB signal from the USB device to the embedded USB host bypasses the USB bridge."

267. Each Mux Implementation of Ground 1 renders claim element 1[e] obvious. In particular, Chang II describes creating "*a detection signal (bridging detection signal or slave detection signal)*" and "*then according to the detection signal control[ling] the operation of either the second USB controller 132 or the bypass circuit unit 133*." EX1015 (Chang II), [0038]. Depending on the detection signal (detecting a host or device), a "*transmission path*" is chosen. *Id*., [0021]. Applying these teachings to Chang, it would have been obvious that upon detection of the consumer product in device mode, the switch would directly connect the dual-role port to a local port on hub control unit 46 and bypass the bridge. This forms a host-to-device connection between the embedded host and the downstream USB dual-role product.

268. I observe that the claim does not require dynamic mode switching (*e.g.*, "*the USB device*" switching roles during, for example, an active session). The claim recites that the device sends a first signal while in a host mode (element 1[b]) and sends a second signal while in device mode (element 1[d]). There is no restriction

Microchip Ex. 1013, p. 140
Microchip v. Aptiv
IPR2024-00230

Aptiv Exhibit 2013 Page 140
Microchip v. Aptiv IPR2024-00228

DocuSign Envelope ID: 572DBD26-4FF7-4FA3-B858-2C79783CD24F

on what occurs between these signals. For example, the USB product could power off and restart in a different mode, and still perform the method steps of sending the first and second signals.

269. However, if Aptiv argues that the claim requires dynamic switching and argues that Chang II does not disclose such, at a minimum a POSITA would have found it obvious in view of Chang II (and the plethora of dual-role products available at the time) to detect a role switch dynamically and route the USB signals accordingly. Again, the use of dual-role smartphones (*e.g.*, iPhone and Android) was well-known, and some of these products switch roles dynamically. *See* §VI.B.

270. Chang II explains that it "*automatically and periodically*" performs a host/device check so "*control chip 13 can respectively switch to the bridge transmission path or the bypass path*." EX1015 (Chang II), [0024]. In this regard, Chang II discloses that "*checking whether the user has exchanged for other external device* ***would occur constantly***." *Id.*, Fig. 6 (step 613 and 625), [0043] (emphasis added). In other words, Chang II supports being able to dynamically detect the mode of the downstream product. At a minimum, Chang II's disclosure regarding "*constantly*," "*periodically*," and "*automatically*" checking whether a host or device is connected—together with a POSITA's knowledge of the numerous dual-role products available (*see* §VI.B) that "*change roles dynamically*" (EX1009 ('072 patent), 3:21-59; *see also* EX1025 (Castleberry), 4:17-22)—render it obvious to a

Microchip Ex. 1013, p. 141
Microchip v. Aptiv
IPR2024-00230

Aptiv Exhibit 2013 Page 141
Microchip v. Aptiv IPR2024-00228

DocuSign Envelope ID: 572DBD26-4FF7-4FA3-B858-2C79783CD24F

POSITA to periodically recheck host/device status. Indeed, "*[d]ynamic role swaps during active connections*" were common, such that USB standards expressly address this situation. EX1022, §1.1.

271. The purple arrows below illustrate the routing that bypasses the bridge for each Mux Implementation:

Hub 46 Mapping

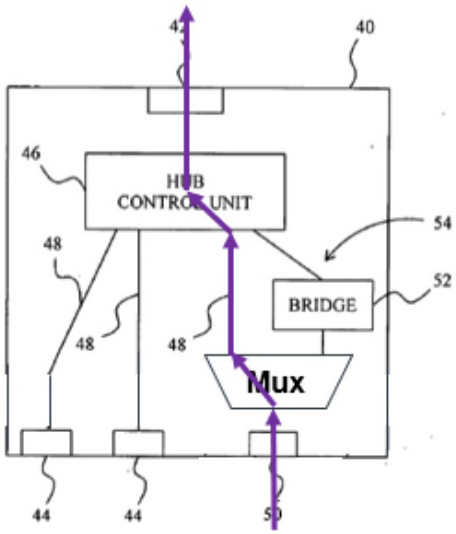

FIG. 3

EX1014 (Chang), Fig. 3 (modified and annotated).

Microchip Ex. 1013, p. 142
Microchip v. Aptiv
IPR2024-00230

Aptiv Exhibit 2013 Page 142
Microchip v. Aptiv IPR2024-00228

DocuSign Envelope ID: 572DBD26-4FF7-4FA3-B858-2C79783CD24F

Hub 40 Mapping

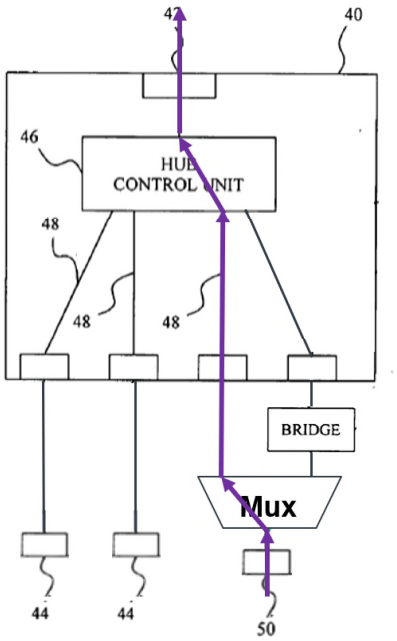

FIG. 3

Id., Fig. 3 (modified and annotated).

B. Ground 2 (Claim 1): Chang in view of Chang II, Chutorash, and the Knowledge of a POSITA

272. Grounds 1 and 2 are the same, except that Ground 2 expressly combines the Chutorash reference. Everything else is the same. The motivation to combine is presented *supra* §X.

1. Claim 1

273. I summarized the Chutorash reference in §VIII.C. Chutorash has a "*vehicle control system 106*" (which includes a "*media system*" and "*entertainment system*") located inside a car ("*vehicle 100*"). Chutorash's infotainment system is

Microchip Ex. 1013, p. 143
Microchip v. Aptiv
IPR2024-00230

Aptiv Exhibit 2013 Page 143
Microchip v. Aptiv IPR2024-00228

DocuSign Envelope ID: 572DBD26-4FF7-4FA3-B858-2C79783CD24F

shown in the figures below. EX1029 (Chutorash), 5:27-33; Figs, 1-3, and 27-30. Recall that "*[t]he USB Host function is often embedded into a component of the vehicle infotainment system, such as into the radio or other control module*." EX1009 ('072 patent), 1:51-53. Accordingly, in view of Chutorash, it would have been obvious to deploy the combined Chang/Chang II system (*i.e.*, the Mux Implementations) in a vehicle with an embedded host.

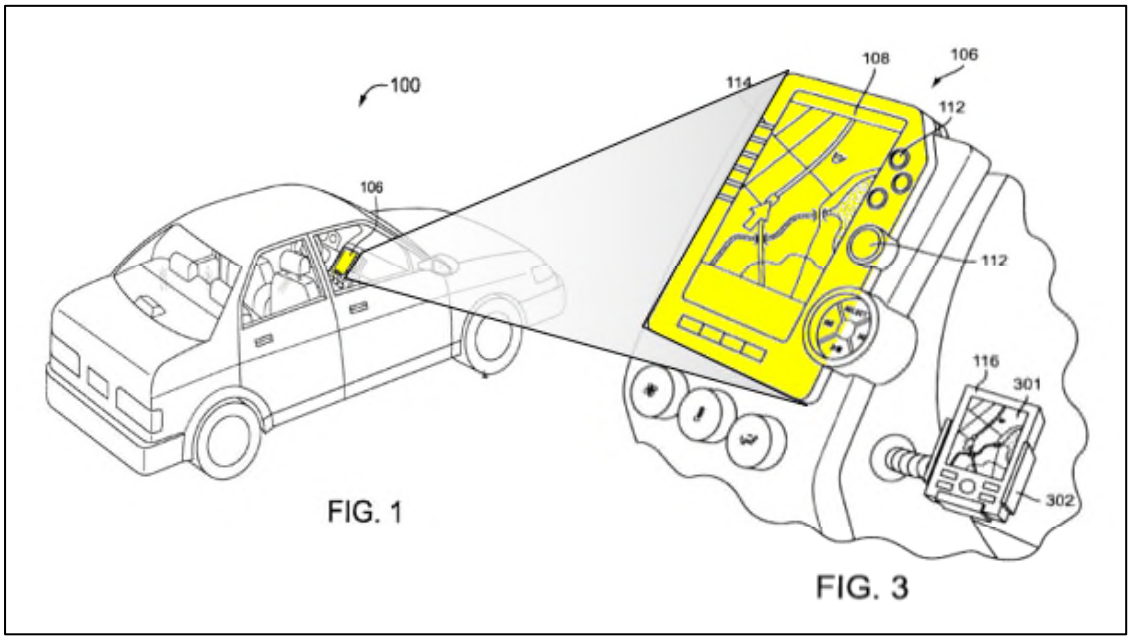

EX1029 (Chutorash), Figs. 1 and 3 (annotated).

C. Secondary Considerations of Nonobviousness

274. Neither Aptiv nor the Examiner identified any secondary considerations that favored a finding of nonobviousness during prosecution of the Challenged Patents (or the other patents in the same family). *See generally* EX1002, EX1004, EX1006, EX1008, EX1010, EX1012. And I am unaware of any secondary

Microchip Ex. 1013, p. 144
Microchip v. Aptiv
IPR2024-00230

Aptiv Exhibit 2013 Page 144
Microchip v. Aptiv IPR2024-00228

DocuSign Envelope ID: 572DBD26-4FF7-4FA3-B858-2C79783CD24F

considerations that tend to show nonobviousness of the Challenged Claims. I am informed by counsel for Microchip that Aptiv sued Microchip in a district court action asserting infringement of the Challenged Patents and two related patents (U.S. Pat. 9,460,037 and U.S. Pat. 10,545,899). Counsel for Microchip provided me with Aptiv's Interrogatory Response No. 4 from that case (EX1045) regarding secondary considerations which I have reviewed. I understand from counsel that establishing the necessary "nexus" requires tying the evidence to what was not known in the prior art.

275. In its Interrogatory Response, Aptiv asserts that "*the following secondary considerations support the nonobviousness of the claimed inventions of the Aptiv Asserted Patents: commercial success, industry praise for Aptiv's innovative products, failure by Microchip to develop a solution like Aptiv's innovative products, and copying by Microchip of Aptiv's innovative products*." EX1045, 11. I disagree. I note that while many of Aptiv's alleged secondary consideration specifically relate to Apple CarPlay, the Challenged Claims do not recite or claim CarPlay or a specialized bridge. Rather, the Challenged Claims simply recite USB operations, such as use of a USB hub, host-to-device connection and host-to-host connection through a USB bridge, etc. that were standard and well-known (*e.g.*, Chang discloses a bridge that works in conjunction with a hub to enable a host-to-host connection). Additionally, Aptiv provides no patent-by-patent or

DocuSign Envelope ID: 572DBD26-4FF7-4FA3-B858-2C79783CD24F

claim-by-claim breakdown, and makes the same blanket assertions for all patent and all claims.

276. ***Industry Praise***. Aptiv asserts that it "*received industry praise and several awards based on the claimed invention. For example, in 2016, Aptiv won the Automotive News PACE Award for the Dual Role Hub, which heralded the Dual Role Hub as solving the 'vexing problem' of integrating an iPhone with a vehicle infotainment system*." EX1045, 11. But Aptiv refers to only a single award, not "*multiple awards*." Before being engaged for this case, I had never heard of Aptiv's "Dual Role Hub," nor had I heard of the "Automotive News PACE Award." Aptiv cited no documents in support of its assertions. Aptiv did not provide the selection criteria for the award, nor am I aware that the award mentioned any of the Challenged Patents.

277. Having never heard of the award, I googled "Automotive News PACE Award 2016" and reviewed the first search result at www.autonews.com/awards/2016-automotive-news-pace-awards (pasted below). I immediately observed that the "PACE Awards" have little (if anything) to do with USB technology. On the contrary, there were over a dozen winners with a wide variety of products such as "*Water-cooled condenser*," "*Cover Carving Technology for seats*," and "*Electronic oil pump*," all of which are in areas that a POSITA would not even be familiar with.

Microchip Ex. 1013, p. 146
Microchip v. Aptiv
IPR2024-00230

Aptiv Exhibit 2013 Page 146
Microchip v. Aptiv IPR2024-00228

DocuSign Envelope ID: 572DBD26-4FF7-4FA3-B858-2C79783CD24F

2016

Organization Name	Winner Title
Valeo	Water-cooled condenser
Valeo	Electric supercharger
Faurecia Emissions Control Technologies	Exhaust System Adaptive Valve
Federal-Mogul Corp.	Hybrid induction-welding for steel pistons
Delphi Automotive	Dual Role Hub
FTE automotive GmbH	Electronic oil pump
Koito Manufacturing Co.	Dual-function LED headlamp
Bosch	Linear Force Solenoid
Gentex Corp.	Full Display Mirror
Magna Closures	Electronic door latch
Faurecia Automotive Seating	Cover Carving Technology for seats
Ichikoh Industries	MonoLED light source
GKN Driveline	Lightweight constant velocity joint

278. The linked description for the Aptiv award (*see* www.autonews.com/awards/2016-winner-delphi-automotive-dual-role-hub) says that the purported "*vexing problem*" was that an "*iPhone running CarPlay™ wanted to operate as the sole 'host' device taking control from the car radio and denying*

Microchip Ex. 1013, p. 147
Microchip v. Aptiv
IPR2024-00230

Aptiv Exhibit 2013 Page 147
Microchip v. Aptiv IPR2024-00228

DocuSign Envelope ID: 572DBD26-4FF7-4FA3-B858-2C79783CD24F

access to other devices."[17] While the award refers to CarPlay, none of the Challenged Claims recites CarPlay. And even the unmodified version of Chang Fig. 3's hub (which included a host-to-host bridge alongside several other simultaneous device connections) allows a downstream USB product to "*operate as the [sole] 'host' device [without] denying access to other devices.*" Although CarPlay had not been developed when Chang was filed in 2005, there is no reason that the so-called "*vexing problem*" of a product that "*wanted to operate as the sole 'host' device …*" would not have worked (at most with simple modifications) with Chang's hub. This is largely due to the fact that Chang's hub is built with an off-the-shelf USB bridge, USB Hub, requires no violation of the USB specifications (*see* EX1014 (Chang), [0002]) and supports a product that wanted to act as host. Given that the prior art already disclosed the required features, I note the award article touts that Aptiv achieved "*a lower cost*" and "*cost effective solution*," which could be a reason for

[17] I note that Aptiv did not assert any "long-felt" need as a secondary consideration of nonobviousness. To the extent Apple CarPlay's requirement that the iPhone serve as host in the vehicle environment has any relevance to secondary considerations, it demonstrates obviousness. This is because the claimed solution was readily apparent to a POSITA upon knowing of Apple's design requirements.

Microchip Ex. 1013, p. 148
Microchip v. Aptiv
IPR2024-00230

Aptiv Exhibit 2013 Page 148
Microchip v. Aptiv IPR2024-00228

DocuSign Envelope ID: 572DBD26-4FF7-4FA3-B858-2C79783CD24F

the award. In my opinion, the PACE award does not support a finding of nonobviousness.

279. ***Commercial Success***. Aptiv asserts that its "*Dual Role Hub, which embodies the claimed inventions of the Aptiv Asserted Patents, was the first USB hub product that supported CarPlay and provided all the features sought by the vehicle manufacturers: (1) accommodating the head unit as a first host and the iPhone as a second host while running CarPlay; (2) providing persistent USB; and (3) using a single lane configuration. Aptiv secured several long-term supply contracts shortly after the Dual Role Hub entered the market, including with the 'Big Three' U.S. car manufacturers (General Motors ('GM'), Ford, and Fiat Chrysler Automobiles ('FCA,' now Stellantis)*." EX1045, 11. I disagree for at least three reasons.

280. First, Aptiv has not shown nor presented any evidence of commercial success for the Dual Role Hub, let alone established that any such purported success has the required nexus to the Challenged Claims. Should Aptiv attempt to establish commercial success (and that any such success was due to practicing the Challenged Claims), I reserve the right to rebut such assertions and evidence, including with countervailing evidence showing that any such commercial success was relatively modest compared to Microchip's sales of unaccused USB hubs in the automotive sector and/or lacked the required nexus (*i.e.*, connection) to the Challenged Claims.

Microchip Ex. 1013, p. 149
Microchip v. Aptiv
IPR2024-00230

Aptiv Exhibit 2013 Page 149
Microchip v. Aptiv IPR2024-00228

DocuSign Envelope ID: 572DBD26-4FF7-4FA3-B858-2C79783CD24F

More generally, there are many other features that any alleged commercial success could be attributable to, including (for example) pricing, marketing efforts, number and type of available downstream ports, power delivery options, etc.

281. Second, even the unmodified hub of Chang Fig. 3 provided the three features Aptiv mentions in its Interrogatory Response. Chang's hub (1) provides for a host-to-host connection through its bridge; (2) provides "*persistent*" USB (*i.e.*, user could plug/unplug a downstream USB host without disrupting the connection of other USB products and vice versa); and (3) has a "*single lane*" configuration[18] (*i.e.*, there was a single USB cable between the hub and the upstream host).

282. Third, the Challenged Claims do not recite or claim "*CarPlay*," any type of a novel bridge, or a "*single lane configuration*" at all. And few (if any) of Challenged Claims could be said to require the concept of "*persistent USB*."

283. In summary, in my opinion, Aptiv's alleged "commercial success" does not support a finding of nonobviousness.

284. ***Copying***. Aptiv's allegations regarding copying are vague and unclear. Aptiv states:

> *Although Microchip was aware of the Dual Role Hub by at least April 2014, Microchip was unable to develop, or market, a competing solution (even an infringing one) until 2017. Indeed, Microchip*

[18] *See* EX1003 ('420 patent), 3:24-34 (discussing sub-optimal solution with multiple cables between the hub and Head Unit).

Microchip Ex. 1013, p. 150
Microchip v. Aptiv
IPR2024-00230

Aptiv Exhibit 2013 Page 150
Microchip v. Aptiv IPR2024-00228

DocuSign Envelope ID: 572DBD26-4FF7-4FA3-B858-2C79783CD24F

> *believed for months that it was not possible to achieve persistent USB in a single-lane configuration. Microchip (incorrectly) dismissed Aptiv's (then Unwired) Dual Role Hub solution as not compliant with USB or Apple's CarPlay requirements. It was not until late January 2015 at the earliest that Microchip first believed it was even technically feasible to develop a solution comparable to Aptiv's Dual Role Hub. Microchip specifically sought to develop a solution similar to Unwired's. The first patent application of the Aptiv Asserted Patents published on March 26, 2015, describing the claimed inventions embodied by the Dual Role Hub and hub chip within in. By July 2015, Microchip had a business plan for its infringing Sandia products.*

EX1045, 12. To the extent Aptiv is insinuating that Microchip "*copied*" anything, Aptiv cites no supporting evidence. For example, Aptiv cites nothing to support its speculation that Microchip copied Aptiv's published patent application. In my opinion, Aptiv's unsubstantiated allegations of "copying" do not support a finding of nonobviousness. I reserve the right to supplement my opinions on this topic in response to any evidence Aptiv may provide.

285. ***Failure by Others***. With respect to failure by others, Aptiv asserts that around 2016 "*Microchip was considering two alternative solutions to CarPlay: FlexConnect and a dual lane solution. But FlexConnect did not allow for persistent USB, and the dual lane solution did not allow for a single lane configuration. Microchip thus failed to offer a solution to CarPlay that met all the features sought by the vehicle manufacturers. The Dual Role Hub remained the sole product on the market that did so, until Microchip began selling its infringing Sandia products in or around 2017*." EX1045, 11-12. I first note that Aptiv does not even allege that

Microchip Ex. 1013, p. 151
Microchip v. Aptiv
IPR2024-00230

Aptiv Exhibit 2013 Page 151
Microchip v. Aptiv IPR2024-00228

DocuSign Envelope ID: 572DBD26-4FF7-4FA3-B858-2C79783CD24F

anyone other than Microchip "*failed*." And, with respect to Microchip, Aptiv cites no evidence in support of its assertions. I have already explained above how prior art like Chang's hub satisfied the three purported "f*eatures sought by the vehicle manufacturers*." And just because a company provided different solutions or introduced additional product offerings over time does not mean there was "failure by others." In my opinion, there is no showing of "failure by others" that supports a finding of nonobviousness. I reserve the right to supplement my opinions on this topic in response to any evidence Aptiv may provide.

286. ***Other***. Aptiv generically asserts that "*Microchip began a campaign to undermine Aptiv's market position. For example, in January 2015, Microchip sent a letter to Aptiv asserting meritless infringement claims. Microchip later filed suit asserting the same claims. Aptiv was found to not infringe the asserted patents at trial. See Microchip Tech. Inc. v. Aptiv Services US, LLC, 1:17-cv-1194-JDW, D.I. 37*." EX1045, 12. I am not aware that a lawsuit on other patents (regardless of the outcome) is a basis for a secondary consideration supporting nonobviousness.

***

287. In conclusion, I find that none of Aptiv's alleged secondary considerations support a finding of obviousness. And even if one or more secondary considerations could be said to tend toward nonobviousness, they would not (alone or in combination) be sufficient to counter the strong case of obviousness presented

Microchip Ex. 1013, p. 152
Microchip v. Aptiv
IPR2024-00230

Aptiv Exhibit 2013 Page 152
Microchip v. Aptiv IPR2024-00228

DocuSign Envelope ID: 572DBD26-4FF7-4FA3-B858-2C79783CD24F

by the modified Mux and Crossbar Implementation of Chang Fig. 3 I have discussed. Even though Aptiv has not alleged other secondary considerations, I address them below.

288. ***Long-standing Problem or Need***. I am not aware of any long-felt or unresolved need for the claimed subject matter which, as previously noted, does not refer to CarPlay. But Aptiv refers to an "*iPhone running CarPlay*™" as a "v*exing problem*." To the extent that an iPhone running CarPlay was a problem at all, it was not a "long-standing" problem, as Apple announced CarPlay in June of 2013. *See* https://en.wikipedia.org/wiki/CarPlay. After the 2013 announcement, Apple worked with Ferrari, Mercedes-Benz, Volvo, BMW, Ford, GM, Honda, Hyundai, Jaguar Land Rover, Kia, Mitsubishi, Nissan, Subaru, Toyota and others to bring up early CarPlay implementations. Ferrari and Volvo demonstrated working systems at the March 2014 Geneva Motor Show (*see* https://9to5mac.com/2014/03/05/hands-on-demo-of-carplay-in-new-ferrari-volvo-vehicles-from-geneva-motor-show-video/ and www.cars.com/articles/apple-unveils-carplay-for-volvo-mercedes-ferrari-at-2014-geneva-motor-show-1420663027611/).

289. Thus, once Apple increased the market demand for supporting an iPhone with CarPlay in host-mode when connected to a vehicle that already contained an embedded upstream host, companies quickly developed a variety of

Microchip Ex. 1013, p. 153
Microchip v. Aptiv
IPR2024-00230

Aptiv Exhibit 2013 Page 153
Microchip v. Aptiv IPR2024-00228

DocuSign Envelope ID: 572DBD26-4FF7-4FA3-B858-2C79783CD24F

approaches/solutions, which suggests that the solutions were obvious. I note that Apple maintained the CarPlay specifications confidential in 2013 and required an NDA to obtain them. With the benefit of Apple's confidential technical specifications, the speed at which Aptiv and others came up with solutions to support CarPlay again suggest obviousness. Thus, if anything, this secondary consideration demonstrates obviousness, not nonobviousness.

290. ***Unexpected Results / Skepticism***. I am not aware of any unexpected results. The components (*e.g.*, USB hub, USB bridge, and USB multiplexers) were readily available off-the-shelf components that were simply used for their intended purposes when combined to create claimed subject matter. There is nothing unexpected about how these components work in combination—they simply perform their normal functions to achieve an expected result. Nor would a POSITA have been skeptical of this.

291. ***Commercial acquiescence of competitors***: I am not aware that anyone has licensed, or sought to license, the Challenged Patents.

XV. CONCLUSION

292. I am aware that this declaration will be filed as evidence in an IPR proceeding before the PTAB. I am aware that making willfully false statements in my declaration are punishable by fine or imprisonment, or both (under 18 U.S.C. §1001), and thus such actions may compromise the validity of the IPR Petition. All

Microchip Ex. 1013, p. 154
Microchip v. Aptiv
IPR2024-00230

Aptiv Exhibit 2013 Page 154
Microchip v. Aptiv IPR2024-00228

DocuSign Envelope ID: 572DBD26-4FF7-4FA3-B858-2C79783CD24F

statements herein made by me of my own knowledge are true, and all statements made on information and belief are believed to be true.

293. I declare under penalty of perjury that the foregoing is true and correct. Executed this 27th day of December, 2023 in Berkeley, California.

Eric Welch

Microchip Ex. 1013, p. 155
Microchip v. Aptiv
IPR2024-00230

Aptiv Exhibit 2013 Page 155
Microchip v. Aptiv IPR2024-00228

DocuSign Envelope ID: 572DBD26-4FF7-4FA3-B858-2C79783CD24F

APPENDIX A

DocuSign Envelope ID: 572DBD26-4FF7-4FA3-B858-2C79783CD24F

Eric Welch

Curriculum Vitae

May 2023

I have over 49 years experience in Systems, Electrical and Software Engineering, Engineering Management and Expert Witness.

Expert Experience

- 2022-2023 Served as testifying expert in patent infringement case involving consumer electronics devices

- 2021 Served as consulting Expert for two co-defendants in a patent infringement case involving Smart Phones and Bluetooth sensors

- 2020-2021 Served as testifying Expert Witness in Arbitration for a contract dispute involving engineering services. Gave deposition and testified at Arbitration hearing.

- 2020-2021 Served as testifying Expert Witness for patent owner in an infringement action and IPR involving USB Memory sticks.

- 2020 - Served as testifying Expert Witness for plaintiff in Microsoft v Dareltech, an IPR case involving "selfie sticks". PTAB found for plaintiff.

- 2018-2020 - Served as testifying Expert Witness for plaintiff in SIMO Holdings v Ucloudlink a Patent Infringement case involving Mobile Cellular devices (phones and WiFi Hotspots). Gave Deposition. Court ruled for plaintiff.

- 2019 - Served as testifying Expert Witness for plaintiff in SZ DJI Technology v Dareltech, an IPR case involving "selfie sticks". Case settled after PTAB institution but prior to completion of IPR process.

- 2018 - Served as consulting Expert for plaintiff in Toshiba and MSI v Walletex Microelectronics, an IPR case involving USB 'C' technology.

- 2017-2018 - Served as testifying Expert Witness for plaintiff in American Security Products Co. v. AT Systems, Inc., an IPR involving smart electronic safes. Found prior art, wrote expert declaration. Case settled just days before filing deadline.

- 2017 - Served as consulting Expert for LG Electronics on Fundamental Innovation Sys v LG Electronics, a case involving USB charging technology. Worked on Claims Construction in support both of an IPR action and for the non-infringement case.

- 2017 — Served as consulting Expert for defendants on Pathway Innovations & Technologies, Inc vs Lumens Integration, Inc, et al., an infringement case involving USB web cameras.

Microchip Ex. 1013, p. 157
Microchip v. Aptiv
IPR2024-00230

Aptiv Exhibit 2013 Page 157
Microchip v. Aptiv IPR2024-00228

Task was to perform tests and engineering analysis on various subject and prior-art devices to determine their USB behavior in support of non-infringement case.

- 2016-2017. served as testifying Expert Witness in VIA Technologies vs. Asmedia Inc., a case involving alleged misappropriation of semiconductor intellectual property. I consulted on numerous aspects of the case and wrote an Expert Report on certain key serial high speed bus testing done by the opposing side. Technology was a high speed USB adapter. I was hired for this case because of my experience with USB and other high speed bus technologies, their testing requirements and for my general engineering experience, both hardware and software, with USB adapters. Gave Deposition. Case settled in August, 2017.

- 2015-2016. Served as testifying Expert Witness retained by plaintiff in Microsoft vs Smart Skins, LLC, an IPR action. Analyzed numerous prior art patents and wrote preliminary and final Expert Reports demonstrating how key claims were anticipated in the pre-existing patents. Read all case documents including all expert reports and deposition transcriptions and helped attorneys finalize their argument. I was hired for this case because of my long experience with Smart Phone accessories, data communication technologies and peripheral interface schemes. Gave deposition on my Expert Report. In July 2017, the USPTO issued a Final Opinion.

- 2012. Served as Expert Witness retained by defendant in Universal Electronics vs Logitech. This case was patent infringement litigation involving programmable TV Remote Controls. In this project I analyzed several dozen patents, from both sides and considered their relative strengths and weaknesses. I also developed a detailed history of the programmable TV Remote and identified key patent and non-patent prior art. Case settled out of court.

- 1980. Served as Expert Witness in a contract dispute involving software intellectual property and the residual knowledge of a Software Programmer. Gave deposition.

Engineering Experience

2008 - Present. President, Bramson Welch & Assoc., Inc.

Bramson Welch is an Engineering Services consultancy specializing in embedded systems, USB, RF (BLE, WiFi, LTE), NFC, IR, Data Communications, mobile devices, iPhone accessories and litigation services including data analysis and Expert Witness. I serve as System Architect and Project Strategist on all BWA projects. I frequently work with multiple client groups to coordinate the design and architecture across many different technical and organizational domains.

Representative Projects:

1. Invented a scheme for thread-safe memory and buffer pool management without the use of synchronization locks or disabled interrupts
2. Led team to create a hand-held Bluetooth Low Energy, battery powered medical device with multiple sensors for use in hospital and clinical settings.

Microchip Ex. 1013, p. 158
Microchip v. Aptiv
IPR2024-00230

Aptiv Exhibit 2013 Page 158
Microchip v. Aptiv IPR2024-00228

3. Invented a scheme for high-speed bus communication and process coordination between standard microcontrollers with mitigation for matching different data rates
4. Designed and developed several novel portable wireless, battery powered, data capture devices for medical research. This included a Bluetooth Low Energy radio, NFC, microcontroller, Analog Front End and Smart Phone and PC support software.
5. Designed and developed a non-iBeacon Bluetooth Low Energy locating device.
6. Developed scheme for a custom USB device to deliver its own host software installer by temporarily emulating a Flash Drive. Device automatically senses if its software is already running bypasses flash drive if so.
7. Developed a scheme of running multiple firmware images on a Cortex-Mx processor to support field firmware update
8. Lead a multiple-team development for a cross-platform consumer medical informatics software product.
9. Designed and developed a general purpose, network connected, manufacturing fixture controller for a major consumer electronics manufacturer.
10. Lead a team development of a Bluetooth iPhone accessory that connects survey grade GPS radios to iPhone and Android smartphones.
11. Implemented a wireless, handheld game controller with NFC and a high resolution touch screen (for Video playback) that ran an embedded game programming language.
12. Designed and developed a specialized USB communication subsystem for a line of consumer medical devices.
13. Designed, evaluated, implemented, and certified numerous iPhone accessories
14. Developed a high-end music player and speaker-phone iPhone accessory
15. Developed software to help a major semiconductor company demonstrate a new face recognition image processing chip.
16. Designed and developed a custom, gesture recognition Human Interface USB peripheral that ran a custom embedded scripting programming language within a micro-VM
17. Advised clients and did development of RF designs, including antenna design, power management, range issues, and certification including 2.4 GHz RF Modems, WiFi, Bluetooth, Bluetooth Low Energy, Zig-Bee, etc.

1995 - 2007. VP Engineering & CTO, Keyspan, a division of InnoSys Incorporated

The Keyspan division of InnoSys develops and markets to the retail channel several lines of computer peripheral and communications devices such as USB adapters, computer remote control devices, USB and FireWire add on cards and related technology

Personally designed and developed core technology for the Keyspan business. Helped increase sales from less than $1MM in 1997 to $13MM in 1999.

Representative Projects:

1. For Microsoft, developed an iPhone adapter cable for the MS Sync Media Player Device.

Microchip Ex. 1013, p. 159
Microchip v. Aptiv
IPR2024-00230

Aptiv Exhibit 2013 Page 159
Microchip v. Aptiv IPR2024-00228

DocuSign Envelope ID: 572DBD26-4FF7-4FA3-B858-2C79783CD24F

2. A Network-attached USB Host Controller that allows USB devices to be shared over a network
3. A wireless LCD remote control for the iPod with an RF Doc.
4. Best-in-industry line of USB/Serial adapters
5. Several IR and RF Remote control products for controlling a PC or Mac

1976 - 2007 VP Engineering & CTO InnoSys Incorporated

- Co-founded InnoSys in 1976 and member of senior management team and board of directors
- Served as chief architect and designer for firm
- Managed Engineering Department with staff of ten including hardware, firmware, software and QA
- InnoSys is a computer hardware and software technology development and marketing company. The Airline Gateway division develops and markets a line of specialized communication gateway products that create telecommunication infrastructure for such systems as WEB based travel booking systems.

Representative Projects:

1. Managed a $2MM project to design, develop and deploy a sophisticated store and forward message switch for a major airline reservation system. The system is still in use after 20 years.
2. Developed several PCI serial communication plug-in computer accessory boards, along with associated firmware and host device driver software.
3. Designed and developed a high performance scheduler and operating system for a line of embedded system protocol converters. The converters were used by Amtrak's ticket kiosks, by various airlines to pass flight plans, for inter-line traffic, etc.
4. Consulted with a high technology consumer electronics company in the design of an early (1980s) hand-held general purpose computer.
5. Developed a multi-line high-fidelity digital sound delivery system for an automated phone response system

Publications

Designing a short-range RF link into a consumer-electronics product, EDN Magazine 7/8/2008

http://www.edn.com/article/472244-Designing_a_short_range_RF_link_into_a_consumer_electronics_product.php

Videotex: A Potent Weapon In Struggle with Nonbanks. ABA Banking Journal, Feb 1983

Microchip Ex. 1013, p. 160
Microchip v. Aptiv
IPR2024-00230

Aptiv Exhibit 2013 Page 160
Microchip v. Aptiv IPR2024-00228

DocuSign Envelope ID: 572DBD26-4FF7-4FA3-B858-2C79783CD24F

Patent Pending

"Small Footprint Reference-Counting Buffer Pool Management Without Synchronization Locks" (Filed 2022)

Provisional

"Electronic Digital Stethoscope and Uses Thereof" (Filed 2023)

Patents Filed (these were shipping products)

"METHOD AND APPARATUS FOR HOST CONTROLLER OPERATIONS OVER A NETWORK" (filed 2003)

"APPARATUS AND METHOD FOR TWO-WAY
REMOTE CONTROL AND CRADLE OR ADAPTOR
TO CONTROL AN A/V MEDIA PLAYER" (filed 2006)

Memberships

IEEE - Senior Member
Microsoft Developer Network (MSDN)
Apple Developer Program (iOS and MacOS)
Apple Made for iPhone (MFi) Developer program

Education

BA, Mathematics (with three years each Computer Science and Physics). UC Berkeley, 1977

Microchip Ex. 1013, p. 161
Microchip v. Aptiv
IPR2024-00230

Aptiv Exhibit 2013 Page 161
Microchip v. Aptiv IPR2024-00228