UNITED STATES PATENT AND TRADEMARK OFFICE

BEFORE THE PATENT TRIAL AND APPEAL BOARD

MICROCHIP TECHNOLOGY INC.,
Petitioner,

v.

APTIV TECHNOLOGIES AG,
Patent Owner.

Inter Partes Review No. IPR2024-00228

Patent No. 9,619,420

PATENT OWNER'S SUR-REPLY

TABLE OF CONTENTS

I. INTRODUCTION 1

II. PETITIONER'S NEW ARGUMENTS ARE ENTITLED TO NO WEIGHT 2

III. PETITIONER'S OBVIOUSNESS COMBINATION RELIES ON PLACING THE DETECTION UNIT IN THE BRIDGE 3

A. In Petitioner's Obviousness Combination, Chang II's Detection Unit and CPU Are Located In the Bridge and Control the Crossbar 3

B. The Petition Does Not Propose Locating the Detection Unit Outside of the Bridge 4

IV. LOCATING THE DETECTION UNIT WITHIN THE BRIDGE AS PROPOSED IN THE PETITION RESULTS IN INOPERABILITY, WITHOUT FURTHER MODIFICATIONS 8

A. Using the Bridge to Control the Crossbar in the Proposed Combination is Defective, Without Additional Modifications 8

B. Petitioner's New Obviousness Theories Find No Support in the Petition 9

C. Petitioner Makes Numerous Additional Modifications to the Prior Art In Its Reply That Reflect Hindsight, Not Obviousness 13

V. PETITIONER FAILS TO REBUT LACK OF MOTIVATION TO COMBINE 17

A. The POR Properly Relies on the Petition's Combined Teachings of the Prior Art 17

B. Petitioner's Additional Modifications Proposed In Reply Are Not Supported By Any Rationale Other Than Mr. Welch's Say-So 19

C. The POSITA's Knowledge Does Not Eliminate Petitioner's Burden To Provide Sufficient Motivation to Combine 20

VI. PETITIONER FAILS TO SUBSTANTIVELY ADDRESS THE DEPENDENT CLAIMS 24

A. Claims 2, 8, 16, 17 24
B. Claim 3 26
C. Claim 4 26
D. Claims 5 and 11 26
E. Claims 6 and 12 27
VII. PETITIONER FAILS TO REBUT PATENT OWNER'S SECONDARY CONSIDERATIONS OF NON-OBVIOUSNESS 28

TABLE OF AUTHORITIES

Page(s)

Cases

Arendi S.A.R.L. v. Apple Inc.,
832 F.3d 1355 (Fed. Cir. 2016) 22

Arista Networks, Inc. v. Cisco Systems, Inc.,
IPR2016-00308, Paper 42 (PTAB May 25, 2017) 2

Cisco Sys., Inc. v. C-Cation Techs., LLC,
IPR2014-00454, Paper 12 (PTAB Aug. 29, 2014) 5

Ericsson Inc., et al. v. Intellectual Ventures II LLC,
IPR2018-01689, Paper 15 (PTAB Apr. 16, 2019) 20

Fox Factory v. SRAM, LLC,
944 F.3d 1366 (Fed. Cir. 2019) 29

Genus PLC v. Inguran, LLC,
IPR2021-01027, Paper 25 (PTAB Dec. 8, 2022) 21

In re DBC,
545 F.3d 1373 (Fed. Cir. 2008) 29

Leo Pharm. Prods., Ltd. v. Rea,
726 F.3d 1346 (Fed. Cir. 2013) 28

Liberty Mutual Ins. Co. v. Progressive Casualty Ins. Co.,
CBM2012-00003, Paper 8 (PTAB Oct. 25, 2012) 2, 4, 19

Medtronic, Inc. v. Teleflex Innovations S.A.R.L.,
70 F.4th 1331, 1347 (Fed. Cir. 2023) 14

Microsoft Corp. v. Biscotti, Inc.,
878 F.3d 1052, 1074–75 (Fed. Cir. 2017) 2

MotivePower Inc. v. Cutsforth, Inc.,
IPR2013-00274, Paper 44 (PTAB Sept. 9, 2016) 17,20

Pevarello v. Lan,
2007 Pat. App. LEXIS 28 (B.P.A.I. Jan. 12, 2007) 21

Vimeo, Inc. v. British Telecommunications PLC,
IPR2019-00833, Paper 20 (PTAB Aug. 5, 2020).....4

Other Authorities

37 C.F.R. § 42.6(a)(3).....5

37 C.F.R. § 42.20(c).....2

Exhibit List for *Inter Partes* Review of U.S. Patent No. 9,619,420

Exhibit #	Exhibit Description
2001	Declaration of Henry Houh ("Houh Decl.")
2002	Trial Transcript Excerpts, *Microchip Tech. Inc. v. Aptiv Servs. US, LLC*, No. 17-cv-1194 (D. Del. Apr. 6-13, 2022) – Testimony of Mitch Obolsky
2003	Trial Transcript Excerpts, *Microchip Tech. Inc. v. Aptiv Servs. US, LLC*, No. 17-cv-1194 (D. Del. Apr. 6-13, 2022) – Testimony of Robert Voto
2004	Complaint, *Aptiv Technologies Ltd. v. Microchip Technology, Inc.*, No. 23-cv-307-JDW (DED)
2005	Trial Exhibit No. 58 - Jun. 18, 2014, Mark Orlosky and Brigham Steele Email Chain re: CarPlay and forced DCP to external ports
2006	Trial Exhibit No. 62 - Oct. 1, 2014, Stefan Saenger, Chris Behal, and Ray Kamps Email Chain re: CarPlay - Fiat
2007	Trial Exhibit No. 66 - Nov. 26-Dec. 1, 2014, David Sroka, Eric Kawamoto, and Sal Canu Email Chain re: Media Hub Interim Update
2008	Trial Exhibit No. 246 - Jul. 20, 2014, Don Perkins Email re: UNG Detroit Sales Meeting and Training July 15 – 18
2009	Trial Exhibit No. 252 Aug. 11, 2014, David Sroka, Don Perkins, and Sal Canu Email Chain re: CarPlay compliance Strategy
2010	Trial Exhibit No. 262 - Sal Canu Dec. 2, 2014, Email re: Microchip Position for the Thursday Chrysler Meeting
2011	*Intentionally Omitted*
2012	Declaration of Eric Welch in IPR2024-00229 (U.S. Patent No. 9,645,962)
2013	Declaration of Eric Welch in IPR2024-00230 (U.S. Patent No. 11,176,072)

Exhibit #	Exhibit Description
2014	Declaration of Eric Welch in PGR2024-00011 (U.S. Patent No. 11,681,643)
2015	*Intentionally Omitted*
2016	Declaration of Robert Dezmelyk in Support of Microchip's Responsive Claim Construction Brief, *Aptiv Technologies Ltd. v. Microchip Technology, Inc.*, No. 23-cv-307-JDW (DED)
2017	Trial Transcript Excerpts, *Microchip Tech. Inc. v. Aptiv Servs. US, LLC*, No. 17-cv-1194 (D. Del. Apr. 6-13, 2022) – Testimony of Michael Dreon
2018	Redacted Version of Jury Verdict Form, *Microchip Tech. Inc. v. Aptiv Servs. US, LLC*, No. 17-cv-1194 (D. Del.), D.I. 357
2019	Supplemental Declaration of Henry Houh ("Suppl. Houh Decl.")
2020	Corrected Joint Claim Construction Brief, *Aptiv Techs. AG. v. Microchip Tech. Inc.,* No. 1:23-cv-00307 (D. Del)
2021	Deposition Transcript of Eric Welch (Oct. 10, 2024)
2022	Trial Exhibit No. 5 – Oct. 23, 2013 Presentation Entitled "Digital iPod Out OTG Solution Dual Role USB HUB"
2023	Trial Exhibit No. 6 – Boston USB Hub with SD Card Port ASIC, Product Specification
2024	Trial Exhibit No. 7 – Functional Diagram of Boston 2 Chip
2025	Trial Exhibit No. 12 – Nov. 10, 2014 Presentation Entitled "Delphi/Unwired USB Hub Apple CarPlay Overview
2026	Trial Exhibit No. 25 – Product Business Plan for Sandia
2027	Trial Exhibit No. 124 – Jun. 9, 2017 Presentation Entitled "Delphi Data Connectivity"
2028	Trial Exhibit No. 143 – Oct. 7, 2015 Presentation Entitled "Delphi Data Connectivity"

Exhibit #	Exhibit Description
2029	Trial Exhibit No. 192 – Jan. 2013 Presentation re: Apple Digital iPod Out Support
2030	Trial Exhibit No. 236 – USB4916 Product Specification
2031	Trial Exhibit No. 248 – Jul. 23, 2014 David Sroka, Brigham Steele, Andrew Rogers, Don Perkins Email Chain re: Debunking Unwired
2032	Trial Exhibit No. 268 – Jan. 5, 2015 David Sroka, Santosh Shetty, Mark Bohm Email Chain re: USB Multi Host Bridge Questions
2033	Trial Exhibit No. 273 – Jan. 12, 2015 Davis Sroka, Mike Pennell, Mark Bohm, Eric Kawamoto Email Chain re: Sparta and Tecvox
2034	Trial Exhibit No. 275 – Jan 26, 2016 Mitchel Obolsky, Steve Sanghi, Ganesh Moorthy Email Chain re: Initial Proposal for Tecvox (Chrysler and Fiat, too) with Attachment
2035	Trial Exhibit No. 287 – Jan. 21, 2016 Mark Bohm, Mitchel Obolsky Email Chain re: Analysis of Unwired Media Connectivity Module
2036	Declaration of Michael Dreon
2037	Dreon Decl. Ex. A – Trial Exhibit No. 18 – Jan. 27, 2016 Presentation Entitled "PACE Award Finalist Dual Role Hub"
2038	Dreon Decl. Ex. B – PACE Award Judge's Citation
2039	Dreon Decl. Ex. C – PACE Award Video Transcript
2040	Trial Transcript (Vol. 2)
2041	Trial Transcript (Vol. 3)
2042	Trial Transcript (Vol. 4)
2043	*Intentionally Omitted*
2044	*Intentionally Omitted*
2045	*Intentionally Omitted*

Exhibit #	Exhibit Description
2046	*Intentionally Omitted*
2047	*Intentionally Omitted*
2048 [NEW]	Deposition Transcript of Eric Welch (Feb. 27, 2025)

I. INTRODUCTION

Petitioner maintains that its obviousness combination is "just fine." (Reply, 1.) Not so. The obviousness combination Petitioner originally proposed suffers from a "dead-end" problem, in which the modified bridge and associated detection circuitry becomes electrically disconnected from the downstream ports and unable to perform the claimed switching functionality. Petitioner tries to minimize this defect with new argument: that it suggested that there would be other obvious places to put the detection unit, and that a POSITA would know to make further modifications to avoid this problem as part of their general design process. According to Petitioner, these previously undisclosed modifications would have been obvious because they are necessary to meet "fundamental" USB requirements.

Wherever the detection unit is located, Petitioner's heavy reliance on the POSITA's knowledge of the USB specification and its expert's view that *any* combination of the USB specification with the base Chang reference is "[p]robably" obvious (EX2048, 17:5-12), is a bridge too far. Contemporaneous evidence of Petitioner's own struggles to understand how two-host systems could possibly be USB compliant demonstrate that USB compliance is a design constraint and challenge, not a gap-filling tool to cure fundamental deficiencies in

the proposed combination. Indeed, if the inventive solution claimed in the '420 patent were as obvious as Petitioner claims, why didn't Petitioner implement it back in 2014?

II. PETITIONER'S NEW ARGUMENTS ARE ENTITLED TO NO WEIGHT

Petitioner's new arguments are entitled to no weight, because they were not presented in the Petition. *See Liberty Mutual Ins. Co. v. Progressive Casualty Ins. Co.*, CBM2012-00003, Paper 8 ("*Liberty Mutual*"), 10, 14 (PTAB Oct. 25, 2012) (under 37 C.F.R. § 42.20(c), the Board "will address only the basis, rationale, and reasoning put forth by the Petitioner in the petition"); *cf. Microsoft Corp. v. Biscotti, Inc.*, 878 F.3d 1052, 1074–75 (Fed. Cir. 2017) (Petitioner's "far more detailed" and "substantial" new invalidity arguments on appeal needed to have been presented in the petition). Petitioner offers no credible explanation why the dead-end problem could not have been addressed in the Petition itself. (*See* EX1085, 288:17-20.) Instead of replying to the issues raised in Patent Owner's Response, Petitioner and its expert essentially provided a "new mapping of the claims to the prior art in light of the gaps that Patent Owner pointed out in its Response." *Arista Networks, Inc. v. Cisco Systems, Inc.*, IPR2016-00308, Paper 42 ("*Arista*"), 14 (PTAB May 25, 2017) (granting motion to strike new argument).

Such an approach is improper and dooms the combination relied upon to attack the challenged claims in the Petition.

III. PETITIONER'S OBVIOUSNESS COMBINATION RELIES ON PLACING THE DETECTION UNIT IN THE BRIDGE

A. In Petitioner's Obviousness Combination, Chang II's Detection Unit and CPU Are Located In the Bridge and Control the Crossbar

Petitioner's first defense to the dead-end problem identified by Patent Owner is that Patent Owner's argument rests on a "false premise" (Reply, 8) because Petitioner allegedly described other locations to put the detection unit from Chang II. The Petition, however, belies that assertion: it stated "Chang II discloses that its bridge chip controls routing," and that the proposed combination of Chang II and Chang includes a bridge "configured to control the crossbar via its control inputs" and "similar logic (like Chang II) to control routing." (Petition, 72-73; EX1013, ¶¶270-271; EX2048, 76:21-77:13.) The Petition further supported this configuration, explaining that "certainly it would have been obvious and advantageous to use existing logic [of Chang II's disclosed bridge chip] to save costs". (Petition, 72-73.)

Petitioner and its expert then relied on this proposed crossbar and bridge-with-detection-unit combination as the basis for their element-by-element obviousness analysis. (EX2048, 76:21-77:13.) For example, in analyzing claim 1,

the Petition explained that "Chang II's control chip sends an 'inquire signal,'" which "[a] POSITA would have understood … to determine connection type (*i.e.*, host/device)"; and that the control chip "then selects the bridge transmission path upon detecting the downstream product is in host mode". (Petition, 61, 28-29.) The Petition emphasized the structural relationship among the bridge, control chip, and detection unit: "Chang II's bridge controls routing, *viz.*, 'Bridge Device 1' in Fig. 1 *includes* 'control chip 13' (shown in Fig. 5) with 'detection unit' (134) and CPU (135)." (*Id.*, 38 n.11; *see also* EX2048, 81:12-21 ("That's certainly Chang [II]'s teaching.").)

B. The Petition Does Not Propose Locating the Detection Unit Outside of the Bridge

Petitioner maintains that its obviousness combination includes hypothetical embodiments in which the detection unit is located "outside the bridge." (Reply, 8-9.) But Petitioner is vague about where, outside the bridge, the detection unit is actually located. Petitioner directs the Board to portions of Mr. Welch's declaration (Reply, 8-9, 11 (citing EX1013, ¶¶192-193)), which were not emphasized or explained in any detail in the Petition. (Petition, 38 n.11.) *See Vimeo, Inc. v. British Telecommunications PLC*, IPR2019-00833, Paper 20, 48 (PTAB Aug. 5, 2020), *Liberty Mutual, supra* at 10, 14; *see also Cisco Sys., Inc. v.*

C-Cation Techs., LLC, IPR2014-00454, Paper 12 ("*Cisco*"), 9 (PTAB Aug. 29, 2014) (citations to expert declaration without explanation or additional support in the Petition constitutes improper incorporation by reference under 37 C.F.R. § 42.6(a)(3)).

Even if the Petition had discussed paragraphs 192-193 of Mr. Welch's opening declaration in detail, these paragraphs describe a hypothetical mux embodiment that Petitioner did not rely upon in its element-by-element analysis. The drawing created by Mr. Welch, to illustrate one purported obvious combination of Chang and Chang II, is shown below:

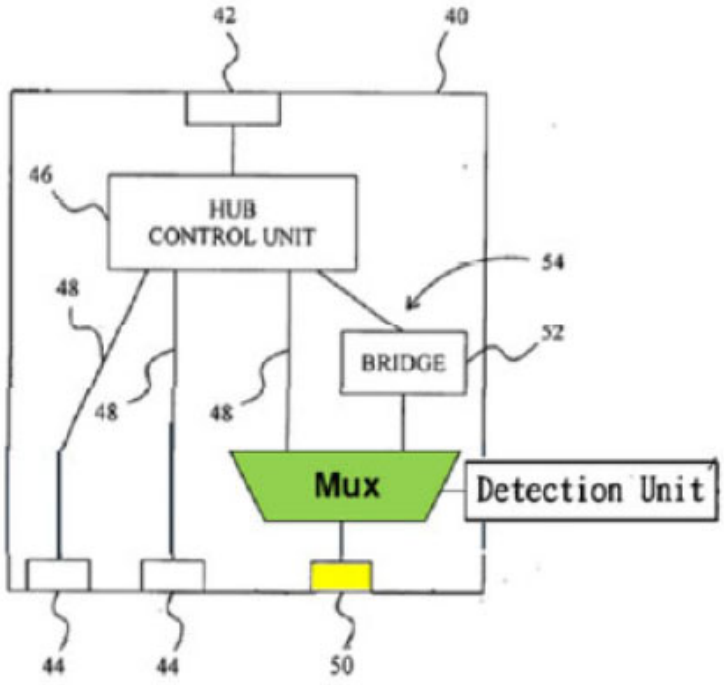

(Reply, 8-9 (citing EX1013, ¶192).)

When asked to explain the various connections and signals of the modified hub module Mr. Welch created, Mr. Welch testified that his drawing (not presented in the Petition) was merely "functional" and thus "not meant to be implementations or … a precise laying out." (EX2048, 87:19-25; 95:21-25.) Moreover, the drawing relates to a different combination than the obviousness combination he and the Petitioner relied upon in their element-by-element analysis, which includes a crossbar switch, not a mux. (Petition, 54-64; EX1013, ¶¶233-239; *see* EX2048, 86:11-87:3 (Mr. Welch confirming that the figure above is a hypothetical mux embodiment, not a hypothetical crossbar embodiment).)

In addition to the fact that this drawing is not the alleged hypothetical crossbar embodiment Mr. Welch relied on in his analysis, Mr. Welch was vague about what it actually shows. In his declaration, he does not explain *how* the detection unit is associated with the mux, or how the detection unit is connected to the mux or other system components (EX1013, ¶193), and at his deposition, he dismissed the issue as an "implementation detail." (EX2048, 94:12-95:18.) Mr. Welch further agreed that *multiple different implementations* (including "implementation detail about how a multiplex[er] such as this needs to work") *could be* represented by the figure. (*Id*., 94:19-98:17.)

The availability of other possible locations for the detection unit underscores that its location is a deliberate design choice the POSITA must make. (*See id*., 109:4-15 ("You'd never do this as an afterthought. This is not an, Oh, by the way.").) And in their element-by-element analysis, Petitioner and Mr. Welch made the affirmative choice to locate the detection unit in the bridge. (Petition, 37-38, 57 n.15, 68-69, 72-73; EX1013 ¶¶238-239, 257-258, 270-271.)[1] Its justifications for that design choice (*e.g.*, lower cost) indicate that the decision was deliberate (*see, e.g.*, Petition, 72-73), and it must now be held to the consequences that flow from this decision.

---

[1] On redirect, in response to leading questions from Petitioner's counsel, Mr. Welch testified that his original opinions were not meant to *exclude* hypothetical embodiments in which the detection unit is outside the bridge. (EX2048, 82:12-22.) But even if the bridge were not the only possible location for the detection unit, it is the only location Mr. Welch relied upon in his analysis of the challenged claims. (EX1013 ¶¶220-301.)

IV. LOCATING THE DETECTION UNIT WITHIN THE BRIDGE AS PROPOSED IN THE PETITION RESULTS IN INOPERABILITY, WITHOUT FURTHER MODIFICATIONS

A. Using the Bridge to Control the Crossbar in the Proposed Combination is Defective, Without Additional Modifications

As explained in the POR, the proposed combination's reliance on the bridge to "determine the type of device currently connected (host/device)" and "control the crossbar via its control inputs" results in the dead-end problem that would defeat the combination. (POR, 23-34; *see* EX2048, 96:20-97:3 ("[Y]ou don't want that connection disrupted. It needs to persist.").) This problem arises from the inclusion of a crossbar switch, which is not described in Chang or Chang II, but was added by Petitioner to satisfy certain claim limitations. (*See, e.g.*, Petition, 61-64.) Accordingly, the Petition and Mr. Welch explained that when a USB device connected via the downstream port is in device mode, the crossbar switches to "host-to-device paths that bypass the bridge," thereby connecting the port (50) to the hub (40), bypassing the bridge[2]:

---

[2] The hypothetical "Hub 40" embodiment is discussed here for brevity, but the arguments apply equally to the hypothetical "Hub 46" embodiment set forth in the Petition.

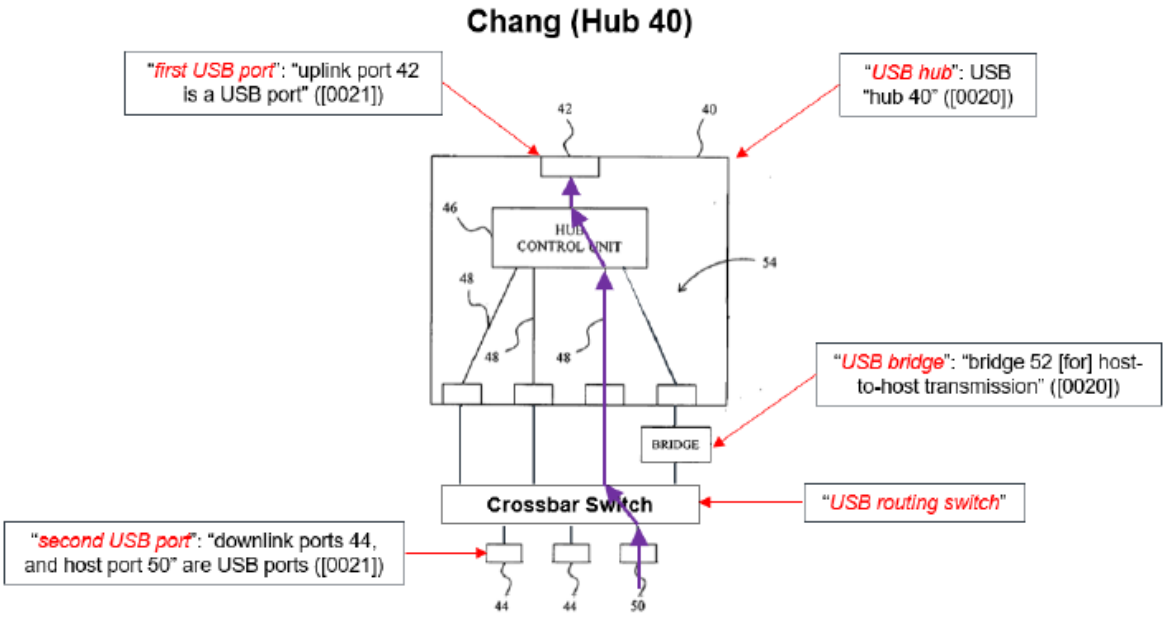

(Petition, 61-64; EX1013, ¶247 (footnote omitted).)

Petitioner does not dispute that when the crossbar switches to a path that bypasses the bridge, the bridge (and its included detection unit and CPU) are electrically disconnected from the downstream ports and cannot communicate with a downstream USB device through the crossbar. (*See* EX2048, 101:23-102:2, 102:20-24.) Consistent with the above figure, in trying to establish the obviousness of the claimed bypass path, the Petition failed to articulate any prior art combination in which the bridge (and its detection circuitry) maintain a persistent, uninterrupted, or direct connection with the downstream ports.

B. Petitioner's New Obviousness Theories Find No Support in the Petition

Yet Petitioner maintains that the hypothetical embodiment depicted above "[w]orks [f]ine." (Reply, 10.) According to Petitioner, the POSITA would infer that there is a direct connection between the bridge and downstream ports (notwithstanding the intervening crossbar) based on Mr. Welch's interpretation of Fig. 5 from Chang II, which purportedly "shows the detection unit (even though part of Chang II's 'bridge') directly connected to the downstream port ('second connection interface 12')":

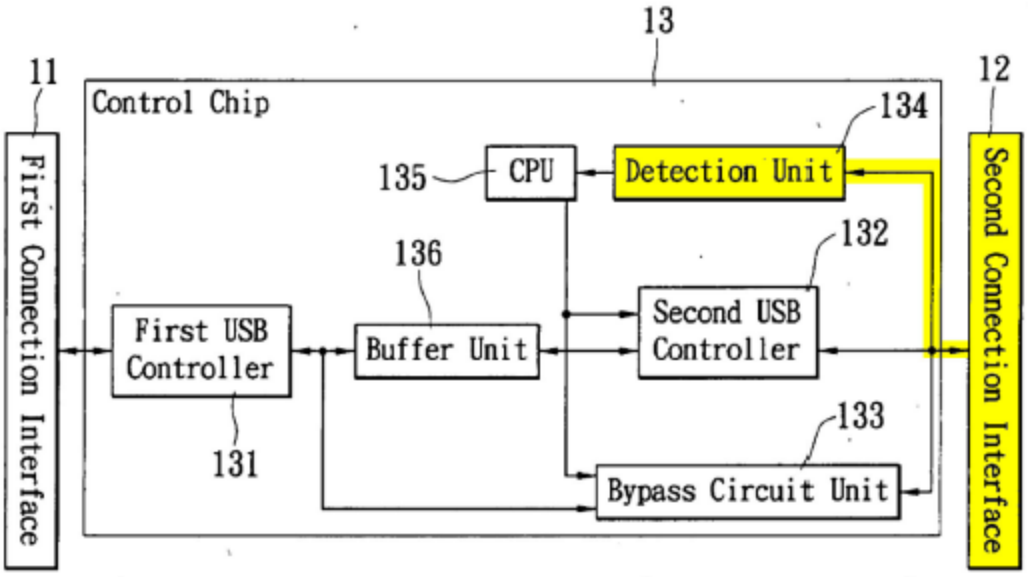

FIG. 5

(Reply, 10-12; *see also* EX1102, ¶39.)

Nowhere does the Petition refer to this alleged "direct connection"; the Petition instead emphasized the presence of switching components, such as a mux

or crossbar, on the paths from Chang II's second connection interface. (Petition, 31-32.) Petitioner's expert acknowledged that the portion of his opening declaration cited by Petitioner does not refer to a "direct" connection. (EX2048, 101:15-102:2.) And he agreed that such a connection would require modification by adding a high impedance connection, not shown in Chang II, to the downstream port. (*Id.*, 103:20-104:3.) Furthermore, this portion of Mr. Welch's declaration only describes a hypothetical mux embodiment, whereas Mr. Welch and Petitioner relied exclusively on separately identified hypothetical crossbar embodiments. (Petition, 45-83; EX1013, ¶¶220-301.) Indeed, in the claim-by-claim analysis, the Petition showed the combination on which Petitioner relied:

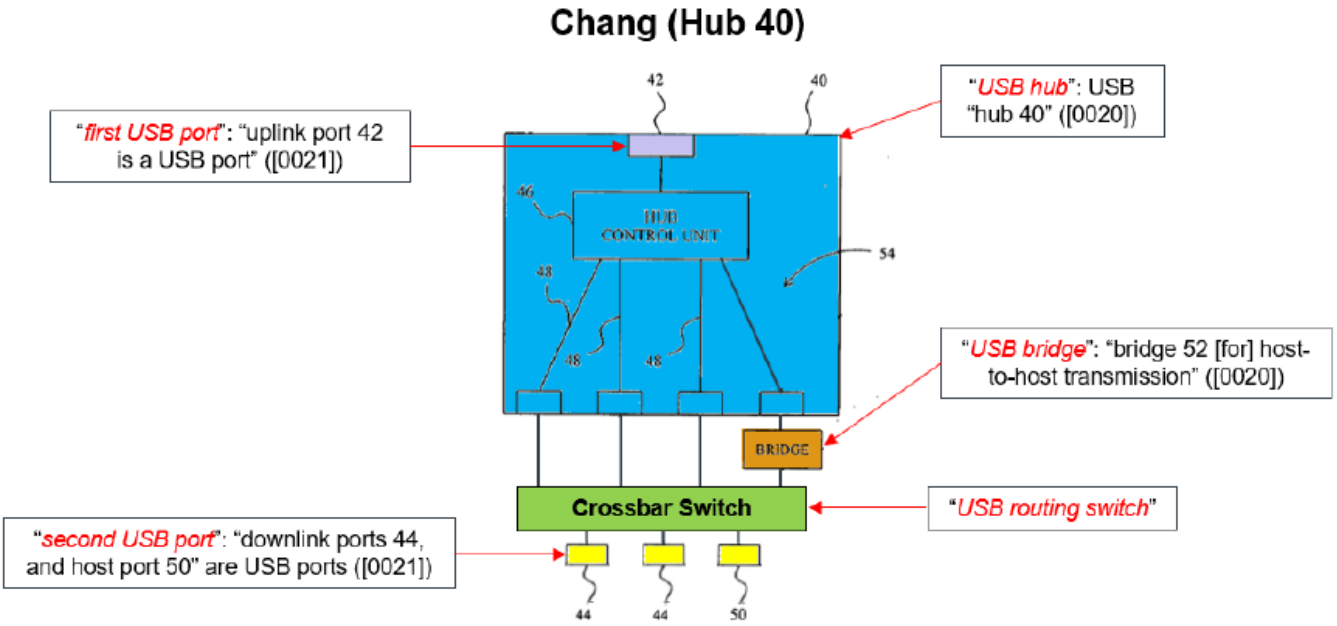

(Petition, 46.)

Even if a POSITA were to interpret Fig. 5 of Chang II as did Mr. Welch (EX2048, 99:19-100:17) and infer a direct connection between the detection unit and the second connection interface, the Petition relied on the *combined* teachings of the prior art and the POSITA's knowledge to insert an intervening crossbar between those two elements (in addition to modifying the ports, bridge, and control logic of Chang), as shown above by Petitioner. (Petition, 42-43, 46, 54-56; *see* EX2048, 71:1-72:20.) For example, the Petition identified that in its prior art combination, the crossbar "connects the [downstream] consumer product to the bridge." (Petition, 57.)

This hypothetical embodiment does not show any direct connection between the bridge and downstream ports. (EX2048, 101:15-102:2.) And the detection unit "would need to be electrically connected to the downstream port in some way … in order to detect what's going on at the downstream port"; but when the signal bypasses the bridge, as in the above figure, the bridge (and its associated detection

circuitry) will be electrically disconnected from the downstream ports. (*Id*., 104:17-23, 101:23-102:2, 102:20-24.)[3]

C. Petitioner Makes Numerous Additional Modifications to the Prior Art In Its Reply That Reflect Hindsight, Not Obviousness

In Section IV.A.3.b of the Reply, Petitioner advances a newly modified version of the Petition's proffered combination, in an untimely attempt to fix the dead-end problem. (Reply, 12-15.) Petitioner hypothesizes that locating the detection unit in the bridge could be operational if a multitude of changes, including adding new circuitry, signals, and control logic, are brought to the original prior art combination. (*See, e.g.*, EX1102, ¶¶52-55.)

---

[3] The cited testimony from Mr. Welch was in the context of the hypothetical mux embodiments, but the same would be true for the hypothetical crossbar embodiments Mr. Welch based his obviousness opinions on.

Even if Petitioner's new modification were considered,[4] the "extensive need to modify [the prior art] in a way not suggested in the Petition" reveals "a hindsight desire to recreate the claimed invention, as opposed to a known need in the art for such a device." *Medtronic, Inc. v. Teleflex Innovations S.A.R.L.*, 70 F.4th 1331, 1347 (Fed. Cir. 2023). This fails to support the grounds of the Petition. (*Id.*; *see* EX2048, 109:19-110:2 (acknowledging that retrofitting aspects of the proposed modification "would be extremely cumbersome").)

To implement Petitioner's proposed "new direction," a POSITA would be required to implement at least the following functionality to the combination described in the Petition:

- Add a permanent detection signal between the modified bridge and the modified downstream ports; OR

---

[4] As set forth in Patent Owner's Motion to Strike (Paper 35, 4), this modification was "not laid out in the petition or in Mr. Welch's declaration" and represents improper new argument on reply. (*See* EX1085, 279:13-22.)

- Have the head unit[5] perform an entirely new function (detecting disconnects); AND
- Add additional control logic/signaling to implement this new functionality.

(EX1102, ¶¶48-55.)

The Petition is silent with respect to each of these modifications, as are Chang and Chang II. Instead, Petitioner and Mr. Welch rely on them being implicit parts of the POSITA's knowledge. But this reveals a defect in Petitioner's obviousness theories more generally: an over-reliance on a POSITA's facility with USB that would render almost any USB-compliant invention obvious. In Mr. Welch's view, the ability to "hot plug," *i.e.*, plug devices in and unplug them, is a "fundamental part of USB." (EX2048, 22:9-14.) Rather than acknowledge how this "fundamental" requirement highlights the importance of the dead-end defect of Petitioner's combination, Mr. Welch relies on it to gloss over that defect, and now suggests that a POSITA would have avoided a dead-end problem to ensure USB

---

[5] As Mr. Welch did not dispute, neither Chang nor Chang II refers to a head unit controlling a switching element, such as a mux or crossbar. (EX2048, 110:17-111:4.) This concept is instead described in the challenged patent. (*See, e.g.*, EX1003, 6:19-28.)

compliance. (*Id*., 25:6-8 ("there is no dead end [issue] because of the way in which . . . USB works").)

Thus, rather than viewing USB standards as setting forth design constraints, Mr. Welch relies on them to pave over an apparent design defect which would, at a minimum, have required a POSITA to add control logic outside of the bridge or additional connections between the bridge and the downstream ports. (*See id*., 45:25-47:14.) Where or what would provide this control logic? Mr. Welch doesn't say; he admittedly "did not take any of these designs far enough to draw an actual schematic." (*Id*., 125:6-13, 49:3-25.)

Petitioner and Mr. Welch's flawed approach to obviousness is all the more problematic given that the claimed inventions of the '420 patent are directed to specific configurations of USB components, designed to solve specific problems. The design decisions involved specifically implicate the way in which communications are controlled and routed among them, yet neither the Petition, nor Mr. Welch's original declaration, describes how this would have been achieved in Petitioner's original combinations.

According to Mr. Welch, the lack of detail is of no concern, because he thinks that combining anything, including components, referenced in the USB standard to Chang would "[p]robably" be obvious. (*Id*., 17:5-14). Mr. Welch's

insistence that the details of his proposed obviousness combinations are merely design choices and implementation details that do not require further analysis and support is incorrect. *MotivePower Inc. v. Cutsforth, Inc.*, IPR2013-00274, Paper 44 ("*MotivePower*"), 50 (PTAB Sept. 9, 2016) ("[R]eliance on a 'design choice' in an obviousness analysis requires reasoned analysis and evidentiary support."). Unsurprisingly, given that the modifications proposed by Petitioner were raised for the first time on Reply, the Petition fails to provide any detail why or how the POSITA would add additional connections, logic, and circuitry necessary to make Petitioner's proposed combination work at all, let alone to work "just fine." Petitioner therefore cannot carry its burden on obviousness.

V. PETITIONER FAILS TO REBUT LACK OF MOTIVATION TO COMBINE

A. The POR Properly Relies on the Petition's Combined Teachings of the Prior Art

Patent Owner's argument is <u>not</u> that Petitioner's obviousness combination depends on Chang II being "bodily incorporat[ed]" into Chang. (Reply, 21.) Instead, Patent Owner argues that Petitioner's obviousness combination fails to pass legal muster, because of the problems that result from Petitioner's attempts to cobble together and arrange all of the elements of the challenged claims from Chang, Chang II, and the knowledge of the POSITA.

Whether the Petition nominally "identified Chang's bridge 52 as the bridge" in its prior art combination is immaterial to Patent Owner's argument. (Reply, 21-22.) Chang admittedly "discloses little" of the bridge, so the Petition instead relied on Chang II to supply "various aspects of its bridge." (Petition, 37-38.) For example, the Petition explained that Chang II's bridge chip "controls routing"; that it "includes detection unit 134 and CPU 135," which "control switching"; and that by "*[a]pplying this teaching to Chang*, Chang's bridge would be configured to control the crossbar via its control inputs." (Petition, 72-73 (emphasis added), 37-38; EX1013, ¶¶270-71; EX2048, 71:1-72:20.) The Petition explained that the bridge accordingly would "include a controller, CPU, or similar logic (like Chang II)" to control the routing. (Petition, 72-73.) This application of Chang II's bridge circuitry is consistent throughout the Petition, including the repeated visual depictions of the combination (showing a "bridge" without any internal detail). (*See, e.g.*, Petition, 45-46.)

The POR demonstrated how this application of the references would result in inoperability and wastefulness; and as Petitioner does not dispute, no POSITA would be motivated to combine the prior art in a manner that would suffer from the dead-end problem. (POR, 23-34, 52-56, 61.) To the extent Petitioner relies on some alternative hypothetical embodiment of the bridge that would avoid these

deficiencies, it was "the responsibility of the Petitioner to clearly articulate" that in the Petition. *Liberty Mutual, supra* at 14 ("It would be unfair to expect the Patent Owner to conjure up arguments against its own patent").

B. Petitioner's Additional Modifications Proposed In Reply Are Not Supported By Any Rationale Other Than Mr. Welch's Say-So

As discussed above, Petitioner newly proposes that the upstream host detects mode changes and controls the crossbar state in the proposed combination. (Reply, 12-15; EX1102, ¶¶48-55.) If "the means to do this [were] straightforward and easy to implement for a POSITA," to whom "the necessary information [was] already available," as Mr. Welch indicates, then the POSITA would have had no reason to look to Chang II to "control the switching functionality," as relied upon by Petitioner. (EX1102, ¶¶53-55; Petition, 38 n.11.)

Instead, the POSITA could have relied on the upstream host to control switching, allegedly within his or her own knowledge, rather than introduce redundant circuitry from Chang II. This is particularly so because according to Mr. Welch, relying on the upstream host for detection and switching would be technically superior and "avoid the 'dead-end' condition." (EX1102, ¶¶53-55.) Once again, Petitioner's approach to this problem is to use the USB standards as a cure-all for their design defect. But by Petitioner's own admission, additional

design work would have been required to solve the dead-end problem, yet none of these design choices is sufficiently described. *MotivePower*, IPR2013-00274, Paper 44 at 50; *Ericsson Inc., et al. v. Intellectual Ventures II LLC*, IPR2018-01689, Paper 15 ("*Ericsson*") at 37 (PTAB Apr. 16, 2019) (rejecting argument based on additional design work unspecified in the Petition). And nowhere do Petitioner or Mr. Welch provide support for the notion that a POSITA would have been motivated to proceed with these additional modifications to the proposed combination of Chang and Chang II, instead of going a different direction entirely, as Petitioner's own business did. *See* EX2010, 1 ("We still believe that our USB84604 solution is the best solution.").

C. The POSITA's Knowledge Does Not Eliminate Petitioner's Burden To Provide Sufficient Motivation to Combine

Petitioner's reliance on the POSITA's knowledge to fill the gaps in the prior art goes beyond straightforward elements and instead requires an artificially heightened level of skill, including *a priori* knowledge of specific documents and

protocols, that Petitioner advances here. (Reply, 2-4; Petition, 22-23.)[6] For example, Petitioner relies on specific disclosures of the USB specification to meet the claim limitations. (*See, e.g.,* Petition, 56-61 (relying on USB specification details of "Bus Enumeration," such as specific request/response protocols, to meet

---

[6] No such heightened level of skill is warranted here: as Patent Owner's expert testified, requiring knowledge of Petitioner's specific documents is "not truly reflective of the actual level of skill necessary in the area of the challenged patents." (EX1084, 105:9-106:2; *see Genus PLC v. Inguran, LLC*, IPR2021-01027, Paper 25 at 8 (PTAB Dec. 8, 2022) (rejecting proposed level of skill as "unnecessarily recit[ing] specific knowledge").) Petitioner's attempts to discredit Dr. Houh miss the mark. (Reply, 4-7.) Dr. Houh is an experienced witness, who the Board has credited and relied on in many proceedings. *See, e.g.*, IPR2022-01345, Paper 44 at 51 ("Dr. Houh's cited testimony is persuasive and credible."); IPR2022-01250, Paper 27 at 37-38 ("In particular, we credit the testimony of Dr. Houh ..."). With respect to his declaration in this matter, the Board has cautioned that inquiries into "how the [expert's] direct declaration testimony came into existence" are "generally a waste of time, both for the witness and the Board." *Pevarello v. Lan*, 2007 Pat. App. LEXIS 28, *23-25 (B.P.A.I. Jan. 12, 2007).

the claimed "bidirectional initiation of communication.").) Even though versions of the USB specification are documentary prior art, the Petition did not allege any combination of Chang and Chang II with the USB specification. (Petition, 3-4.) Instead, Petitioner relies on the POSITA's knowledge to fill the gaps left by Chang and Chang II, in an apparent attempt to avoid having to articulate a motivation to further combine specific portions of the USB specification, but not others, with the already heavily modified combination of Chang and Chang II. *See Arendi S.A.R.L. v. Apple Inc.*, 832 F.3d 1355, 1362 (Fed. Cir. 2016) ("references to 'common sense'—whether to supply a motivation to combine or a missing limitation—cannot be used as a wholesale substitute for reasoned analysis and evidentiary support.").

Further, the alleged general knowledge of the POSITA has continued to grow over the course of this proceeding to fit Petitioner's needs. For example, on reply, Petitioner relies on the USB specification's disclosure of how USB devices open and close data connections, *e.g.*, by "sending an SE0 signal which the receiving port 'may treat … as a reset.'" (Reply, 13-14 (citing EX1018).) Mr. Welch testified that this reset feature is critical: "that works because the reset circuit puts the entire system back into the appropriate state". (EX2048, 106:7-22.) Moreover, not just any default state will suffice: to "make this configuration

work," the default state must "connect to the bridge as if it were a host-to-host connection." (EX2048, 114;15-23.)

Such disclosures are absent from the Petition, and appear in the Reply only in response to the deficiencies pointed out in the POR. Petitioner's expert downplays the new disclosures, aimed at circumventing the dead-end problem, as "implementation details." (*See, e.g.*, EX2048, 104:5-15). He explains that because avoiding a dead-end problem is "fundamental to the way USB works," a POSITA would make design choices "in the beginning" to ensure compliance with the "plug in and the detection, and the unplug case." (EX2048, 124:9-12). In other words, in Petitioner's view, USB compliance was an assumed outcome, so much so that *the way in which it was achieved*, even if it required adding control logic or hardware, is mere "implementation detail" that need not be laid out in the Petition. That position is untenable given the nature of the challenged claims, which recite specific configurations and interconnections of a USB routing switch. *See Ericsson* at 37 ("The reliance on an assertion of 'obvious design choice' omits critical analysis of obviousness and oversimplifies the obviousness analysis.").

However, as Petitioner's own development struggles demonstrate, USB compliance in the context of a two-host system employing a bridge was far from a given. (*See, e.g.*, EX2009 at 1 ("Two USB hosts implementing a single transaction

by splitting it into two serial transactions, instead of one … goes against the primary requirement of USB; one bus / one Host."); EX2005 at 2 ("We need to emphasize that you cannot do Carplay AND own the other ports with one USB data lane. Anybody who states this is doing things with the USB Bus that grossly violates the USB protocol . . . .")) Even Petitioner, one of the leaders in USB design, struggled to comprehend a USB-compliant solution to CarPlay, undermining Mr. Welch's and Petitioner's assumption that USB compliance could be readily achieved through unspecified "implementation details." These contemporaneous emails also serve as powerful evidence that a POSITA would *not* opt for a design that would require additional control logic or hardware to achieve USB compliance, as Petitioner's current obviousness position requires.

VI. PETITIONER FAILS TO SUBSTANTIVELY ADDRESS THE DEPENDENT CLAIMS

A. Claims 2, 8, 16, 17

Claims 2, 8, 16, and 17 recite that the "USB routing switch is configured to" connect *multiple simultaneous* downstream USB devices to the USB hub. The Reply argues that this is met because "USB hubs exist to simultaneously connect multiple downstream devices," and the proposed combination does not change that principle. (Reply, 19-20.)

But the claims require that the *routing switch* be configured to simultaneously connect multiple downstream USB ports directly to the upstream USB port. As explained in the POR, Petitioner's crossbar cannot do this, because the dead-end problem prevents the detection unit from determining the control signals needed for the crossbar to route the downstream ports. (POR, 38-40.)

This is especially problematic for these dependent claims, because using the same routing switch to connect multiple downstream ports utilizes a common set of control signals. (*See*, *e.g.*, EX1063.) These dependent claims require additional switching to simultaneously connect a second device, and that switching becomes inoperable.

The Reply also argues that Patent Owner is setting a double standard by "requiring more of the prior art than the Challenged Patent teaches" with respect to the USB routing switch. (Reply, 20.) But whether the specification is enabling was not challenged in the Petition (nor could it have been). And Petitioner is factually incorrect regarding the patent's teachings: unlike the Petition, the challenged patent explains how the control signals for the routing switch are provided, *e.g.*: "the Head Unit controls the switching device via the USB Bridge hardware or any other convenient means of control." (EX1003, 6:19-21.) The Head Unit, unlike the bridge in Petitioner's proposed combination, is not disconnected from the routing

switch when the downstream device enters a device mode. (*See, e.g.*, Petition, 64 (describing "*host-to-device* paths that bypass the bridge") (emphasis added).)

B. Claim 3

Claim 3 requires the "USB hub module" to recognize whether the consumer device is in host mode or device mode, and "control the USB routing switch accordingly." The Reply does not separately rebut this claim. As explained in the POR, Claim 3 cannot be met at least because entering a dead-end state renders the hub module unable to perform the claimed "recogniz[ing]" or to control the routing switch "accordingly." (POR, 41.)

C. Claim 4

Claim 4 requires that the USB hub module be configured to "dynamically switch" operation of the second USB port between device mode and host mode. The Reply does not separately rebut this claim. As noted in the POR, even if the dead-end problem permits some limited switching (*e.g.*, from host mode to device mode), it does not permit any switching that could be considered "dynamic"— at least because it cannot switch from device mode back to host mode. (POR, 42-48.) Claim 4 cannot be met because the dead-end problem is incompatible with dynamic switching.

D. Claims 5 and 11

Claims 5 and 11 require that the USB routing switch be configured to connect the consumer device to "either the USB bridge or the USB hub" based on whether the consumer device is in host mode or device mode. This claimed switching to one of either 'A' or 'B' is incompatible with Petitioner's new argument. According to Petitioner, the downstream port (to which the consumer device is attached) remains connected to the USB bridge—such that "the detection unit can sense mode changes at any time (regardless of crossbar state)". (Reply, 11-12.) But if the consumer device is permanently connected to the USB bridge regardless of the crossbar's state, then the crossbar (as the purported USB routing switch) does not connect the consumer device to "*either* the USB bridge *or* the USB hub" as claimed. Instead, it connects the device to either the USB bridge alone, or to *both* the USB bridge and the USB hub.

The Reply does not separately rebut these claims, other than to note a clerical error in the POR. But the POR correctly identified that the prior art combination does not meet the requirement that the USB routing switch must be "configured to connect the consumer device to either the USB bridge or the USB hub." (POR, 49.)

E. Claims 6 and 12

Claims 6 and 12 require that "the USB bridge is configured to control the USB routing switch." Petitioner did not address these claims in its Reply. As discussed above, the Reply newly argues that its proposed prior art combination is not defeated by the dead-end problem because the Petition proposed that the detection unit can be located outside of the bridge. But to the extent that is true, claims 6 and 12 cannot be met because the claimed USB bridge must be configured to control the routing switch, and the detection unit, according to the Petition, "control[s] switching." (Petition, 72.)

VII. PETITIONER FAILS TO REBUT PATENT OWNER'S SECONDARY CONSIDERATIONS OF NON-OBVIOUSNESS

Patent Owner's evidence of secondary considerations, set forth in the POR and not credibly rebutted here, demonstrates that Patent Owner's solution was not obvious and helps the Board "avoid[] the trap of hindsight" when reviewing known elements. *Leo Pharm. Prods., Ltd. v. Rea*, 726 F.3d 1346, 1358 (Fed. Cir. 2013). The undisputed real-world outcomes speak volumes: had the patented solution been obvious, Petitioner's well-funded, experienced, and incentivized engineers should have easily met automakers' demands, reaped substantial profits, and maintained market dominance. They did not. Petitioner's failure, and Patent Owner's corresponding success, empirically refutes the obviousness of Petitioner's proposed combination.

Aptiv's dual role hub "*is* the invention disclosed and claimed" in the patent, and thus warrants a presumption of nexus. *Fox Factory v. SRAM, LLC*, 944 F.3d 1366, 1373 (Fed. Cir. 2019) (internal citations omitted). That presumption is unrebutted. A patentee establishes nexus by demonstrating that the objective indicia are the "direct result of the unique characteristics of the claimed invention." *Id.* at 1373-74 (internal citations omitted). As explained in the POR, Aptiv's claimed invention enables (1) a single upstream connection, (2) CarPlay on every port, and (3) persistent downstream connectivity on non-CarPlay ports. (POR, 81-82.)

The challenged claims undisputedly permit these features, which lead directly to the secondary indicia described in the POR. (EX2014, 141:19-22 (Microchip's expert affirming that "Aptiv['s dual-role hub] provides all of those features.").) Petitioner argues that nexus requires limiting claims to one upstream connection (Reply at 24), but objective indicia are relevant "so long as what was sold was within the scope of the claims." *In re DBC*, 545 F.3d 1373, 1384 (Fed. Cir. 2008).

Petitioner further suggests that because the patent does not mention CarPlay by name, it cannot require "CarPlay on all ports." (Reply, 24.) But as explained in the POR, automakers' demand for "CarPlay on all ports" was a demand for

downstream host connectivity on any port, which Aptiv's dual-role hub undisputedly provided. (POR, 81-82.)

Similarly, persistent downstream connectivity on non-CarPlay ports—which Petitioner admits is required by some claims—derives from the claimed structure, which was specifically designed to provide this feature. (Reply, 25.) Petitioner does not dispute that the claimed combination enabled automakers to achieve persistent downstream connectivity in dual-role USB applications using only a single upstream connection. As the challenged patent explains, existing USB hubs could not accommodate dual-role USB devices, such as certain smart phones, without compromising on these market-driven features. (*See, e.g.*, EX1003, 3:4-67, 4:3-11.).

Dated: March 7, 2025

Respectfully submitted,

By: /Adam R. Brausa/

Adam R. Brausa
Reg. No. 60,287
MORRISION & FOERSTER LLP
425 Market Street
San Francisco, CA 94105
Email: ABrausa@mofo.com
Tel: 415-268-6053
Counsel for Patent Owner

Certification of Word Count (37 C.F.R. § 42.24)

I hereby certify that this PATENT OWNER'S SUR-REPLY has 5,482 words (as counted by the Word Count feature of the Microsoft Word™ word-processing system), exclusive of a table of contents, a table of authorities, mandatory notices under § 42.8, a certificate of service or word count, or appendix of exhibits or claim listing.

Dated: March 7, 2025

By: */Bryan Blumenkopf/*
Bryan Blumenkopf

CERTIFICATE OF SERVICE

I hereby certify that the attached PATENT OWNER'S SUR-REPLY was served as of the below date via electronic mail (by agreement) to the following counsel of record for the Petitioner:

Travis Jensen (Registration No. 60,087)
tjensen@orrick.com
T61PTABDocket@orrick.com
Jeremy Jason Lang (Registration No. 73,604)
jlang@orrick.com
PTABDocketJJL2@orrick.com
Orrick, Herrington & Sutcliffe LLP
1000 Marsh Road
Menlo Park, CA 94025-1015

Dated: March 7, 2025

By: */Bryan Blumenkopf/*
Bryan Blumenkopf