IN THE UNITED STATES PATENT AND TRADEMARK OFFICE

BEFORE THE PATENT TRIAL AND APPEAL BOARD

MICROCHIP TECHNOLOGY INC.,
Petitioner,

v.

APTIV TECHNOLOGIES AG AND APTIV TECHNOLOGIES LIMITED,
Patent Owners.

Case No. IPR2024-00228
U.S. Patent No. 9,619,420

PETITIONER'S RESPONSE TO PATENT OWNER'S REQUEST FOR DIRECTOR REVIEW

TABLE OF CONTENTS

TABLE OF CONTENTS ..... **i**

I. INTRODUCTION **1**

II. ARGUMENT **2**

- **A. PO's "Particularity" Argument is Baseless** **2**
- **B. The Board Did Not "Misappl[y]" the Law or "Improperly Shift[] the Burden of Proof"** **7**
- **C. The Board Did Not "Disregard[] the Claim Language"** **9**
- **D. PO's Secondary Considerations Assertions are Baseless** **10**
  - 1. PO's Nexus Arguments Are Baseless 11
  - 2. The Board Evaluated All of PO's Secondary Considerations 13

III. CONCLUSION **15**

As authorized, Petitioner Microchip Technology Inc. respectfully submits this response to Aptiv Technologies AG's ("PO") request for Director Review.

I. INTRODUCTION

Lacking any meritorious basis to challenge the Board's thorough and well-reasoned Final Written Decision (Paper 61, "FWD"), PO takes a kitchen-sink approach, throwing everything at the wall and hoping that something sticks. Excluding sub-parts, PO raises four challenges, representing almost all of PO's failed merits arguments from the underlying proceeding. But the purpose of Director Review is not to relitigate the merits.

To the contrary, "Director Review of a Board's final decision … shall be limited to decisions presenting (a) an abuse of discretion, (b) important issues of law or policy, (c) erroneous findings of material fact, or (d) erroneous conclusions of law." www.uspto.gov/patents/ptab/decisions/director-review-process, §II.B. PO fails to acknowledge—let alone satisfy—any of these criteria. The reason is simple—none are met.

PO's first argues "settled expectations," as if this were a discretionary denial challenge to institution. Paper 62 ("Br."), 1. But the Board issued the FWD, where settled expectations play no role. As the Director has explained, "Director Review of a final decision is not an opportunity to raise issues related to … institution." www.uspto.gov/patents/ptab/decisions/director-review-process,

§III.B. Allowing settled expectations to overturn the well-reasoned FWD would be a dramatic departure from PTAB policy and precedent. It would also waste the extensive resources the Board (and parties) have invested in the proceeding, especially given that the district court stayed the case in deference to the PTAB.

The Petition presented a single, straightforward Ground—obviousness over Chang in view of Chang II. Paper 1 ("Pet."), 4. The Board's FWD is a run-of-the-mill decision that considered a large factual record (over 140 exhibits) and found against PO for multiple reasons. And it was not a close call. The Board's FWD (spanning 78-pages) found by "a ***strong preponderance of the evidence*** [] that the combination of Chang and Chang II teaches all the limitations of the challenged claims and a skilled artisan would have been motivated to combine the relied-upon teachings of Chang and Chang II as set forth in the challenged claims." FWD, 72 (emphasis added). Indeed, the parties litigated the same Ground through final written decision in three other IPR/PGR proceedings (authored by different judges) on related patents with the same result—unpatentability of all challenged claims. IPR2024-00229, Paper 59; IPR2024-00230, Paper 59, PGR2024-00011, Paper 59.

Petitioner addresses below why each of PO's arguments fails.

II. <u>ARGUMENT</u>

A. PO's "Particularity" Argument is Baseless

PO begins by arguing that "[t]he Petition should never have been

instituted"[1] because it "was ambiguous about the location of the detection unit, and how it would control the switching functionality," and thus did not provide the requisite "particularity" under 35 U.S.C. §312(a)(3). Br., 6. This argument does not pass the red-face test and fails for numerous reasons.

First, none of the '420 claims even recite a "detection unit," let alone any particular location for the unrecited detection unit. *See generally* EX1003. Thus, PO's argument fails because it is premised on a non-existent claim limitation. The Board agreed, stating that "[n]one of the claims of the '420 patent recite a detection unit and, thus, the challenged claims are not construed as being limited to requiring a detection unit in any particular location or to requiring a detection unit connected in any particular manner." FWD, 27.

PO's argument that "the detection unit is a component of the Petitioner's cited prior art (Chang II), not the claimed invention" (Br. 7) is self-defeating. Indeed, because a detection unit is "not [a component of] the claimed invention," "it would be nonsensical to expect or require a patent's claims to recite features of the prior art." *Id*. Likewise, the prior art Ground need not provide a detailed

---

[1] As noted, this is not the time to reargue institution. www.uspto.gov/patents/ptab/decisions/director-review-process, §III.B (a request "must be filed within the time period set forth in 37 C.F.R. § 42.71(d)," which is "14 days [from] the entry of [] a decision to institute a trial").

explanation of unclaimed features. PO's argument fails because there was no need for Petitioner to discuss a detection unit at all, much less do so with "particularity."

PO makes much of the Board's passing reference to "particularity."[2] Br., 7 (citing FWD, 29). PO's argument is much ado about nothing. All the Board was conveying was the uncontroversial proposition that the requisite particularity necessarily depends on a claim's specificity (*i.e.*, a petitioner's showing must be commensurate with the claim scope and level of detail therein). FWD, 29 ("[T]he fundamental flaw in [PO's] argument is the claims do not recite a detection unit and it was unnecessary for Petitioner to be particular as to the detection unit in order to establish unpatentability").[3] Regardless, as discussed below, Petitioner was "particular" as to the detection unit.

Second, while not required to do so, Petitioner demonstrated how the prior art satisfied the claims with more "particularity" (*i.e.*, more detail) than the '420

---

[2] Only by misleadingly cropping the FWD can PO assert that the Board found a lack of particularity. Br., 7. But the Board made no such finding. Rather, in context, all the Board said was that if there were a lack of particularity, it would be "understandable as the claims also lack particularity as to the detection unit." FWD, 29. Indeed, the Board found that "the Petition is particular as to the limitations recited in the challenged claims." *Id*.

[3] If a claim recited a "nail," the petitioner's prior art need not show the size, shape, length, weight, cost, etc. of the nail, unless the claim specified those properties.

patent, including for a detection unit. This is beyond dispute. The '420 patent is ***completely silent*** regarding a detection unit (much less its location) and is completely devoid of details on how the claimed "USB routing switch" is configured. *See generally* EX1003. Thus, PO employs a double standard by requiring more disclosure from the prior art than the challenged patent provides. *In re Paulsen*, 30 F.3d 1475, 1481 n.9 (Fed. Cir. 1994).

Nevertheless, Petitioner provided more detail than the '420 patent about host/device detection and USB crossbar/multiplexer operation, routing, and configuration. *Compare* EX1003, Fig. 4 *with* Pet., §§III.B, III.B.1-2, VII.A.1, VII.A.2.f-h and EX1013, §§VI.B, VI.B.1-2, IX, XIV.A.1.f-h. Indeed, PO does not contest that the Petition (and Chang II reference discussed therein) plainly disclose a "detection unit." Rather, PO complains that Petitioner "failed to identify the location of the detection unit." Br., 6. But PO's next sentence contradicts this assertion, admitting that Petitioner identified "three such [locations]." *Id*. Contrary to PO's assertion, these locations were disclosed in Petitioner's opening papers. *See* Pet., 38 at fn.11 (pin-citing EX1013, ¶¶192-193 (explaining that "[the] detection circuitry could be deployed in several obvious ways," including "associated with the mux," "between the dual-role port 50 and mux," and "in the bridge")). Petitioner included the figure below illustrating one exemplary arrangement. EX1013, ¶192.

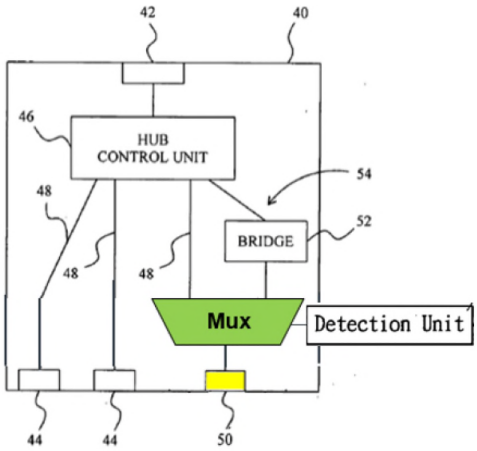

Third, PO's argument fails because the Petition demonstrated why "[a] POSITA would have understood [Chang II's switching] functionality to be implemented by some type of switch, mux, or crossbar." Pet., 32 (citing EX1013, ¶165). The Board agreed:

> Applying the plain and ordinary meaning to the term 'a USB routing switch' …, [PO]'s argument that Chang II does not disclose 'a USB routing switch' falls flat. A form of the word 'switch' (i.e., switch, switches, switching, or switched) is used 38 times in Chang II to describe selecting one of the two transmission paths.

FWD, 37. Not only that, the Board noted that PO's own expert "testified that Chang II teaches a routing switch." FWD, 37 (citing EX1084, 205-207 (admitting that "Chang II is already referencing that there's a switch")).

PO's insinuation that Petitioner pulled a USB routing switch from the ether is absurd. As the Board stated, "[g]iven all the disclosure in Chang II of switching between transmission paths, we determine that PO's argument that the cited art does not teach a routing switch is unavailing." FWD, 37. Moreover, USB

switches were well-known and ubiquitous. EX1059 (listing dozens of commercially available off-the-shelf USB switches). And PO's own expert testified that "a POSITA would understand that the location of the signal detection circuit was a matter of design choice." EX2001, ¶53.

Fourth, PO cites a PTO memorandum (issued ***after*** the FWD and ***long after*** the Petition was filed) changing how the PTAB will apply Rule 42.104(b) to IPR petitions "filed on or after September 1, 2025." July 31, 2025 PTO Memorandum, 3. Even if PO's gripe had merit under the yet-to-be-implemented guidance (which is not the case as explained above), it would be manifestly unfair, arbitrary, and capricious to retroactively apply such a rule to the already decided FWD. This is especially true here, where the PTO's guidance when the IPR Petition was filed stated that "the Board should not deny a petition in which an applicant points to general knowledge and/or a patentee's admissions regarding the scope and content of the prior art to satisfy a claim limitation." June 9, 2022 PTO Memorandum, 6.

B. The Board Did Not "Misappl[y]" the Law or "Improperly Shift[] the Burden of Proof"

PO asserts it was necessary "to be particular as to the detection unit, because the detection unit forms and supports the grounds on which the challenge [is based]." Br., 9. In addition to the reasons discussed *supra* §II.A, this argument fails because it rests on the false premise that "[t]he Petition relies upon the prior art detection unit to show the claimed USB routing switch." *Id*. This is

demonstrably incorrect. As seen below, the Petition maps a "Crossbar Switch"—not a "detection unit"—to the claimed "USB routing switch." Pet., 43-46.

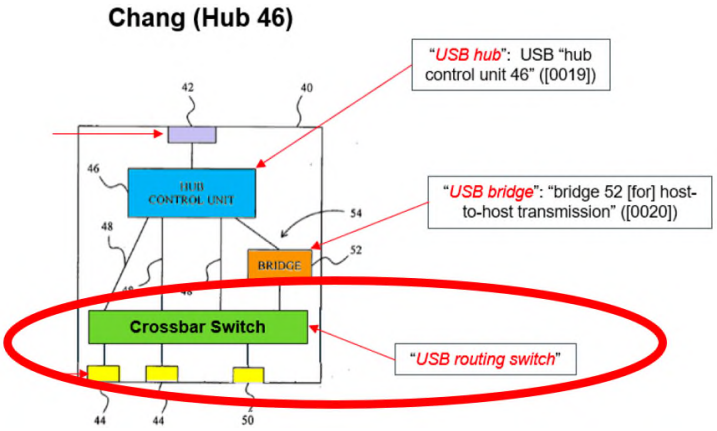

Id., 45. This is not misapplying the law. Only by misrepresenting the Petition can PO even concoct an argument. The Director should reject PO's bait-and-switch tactic, which improperly conflates/substitutes detection unit and switch.

PO also argues that the Board "shift[ed] the burden of proof to [PO], by requiring [PO] to determine how the detection unit could be used to meet the claimed USB routing switch in the proffered combination." Br., 9. First, as shown above, that was never Petitioner's argument—Petitioner pointed to the crossbar as the claimed "USB routing switch." *See* Pet., 55-56 (mapping crossbar to "routing switch"). Second, even though the '420 patent is silent regarding a detection unit (let alone its placement), Petitioner identified three obvious locations for it. EX1013, ¶¶192-193 ("[the] detection circuitry could be … associated with the mux," "between the dual-role port 50 and mux," and "in the bridge.").

Far from "shifting the burden of proof" to PO to guess about a detection

unit, Petitioner provided more granularity than the patent itself and expressly identified several obvious locations. Indeed, the Board had no problem understanding Petitioner's argument. FWD, 25-29.

C. The Board Did Not "Disregard[] the Claim Language"

PO asserts the Board "erred by improperly disregarding the language of the claims," and argues that the Board "contradicted itself" in finding claims 6 and 12 unpatentable. Br., 10. According to PO, claims 6 and 12 require a detection unit to be located inside the bridge. *Id*. But all claims 6 and 12 say is "the USB bridge is configured to control the USB routing switch," not that a detection unit must be inside the bridge. There is no inconsistency, especially given Petitioner's express statement that, regardless of location, "the detection unit must connect to the downstream port to detect the mode, as shown in Chang II." EX1013, ¶193.

PO's argument that the Board was "inconsistent" is based on the faulty premise that the Board held that locating a detection unit inside the bridge would not work. Br., 10-11. But the Board held no such thing. To the contrary, the Board thoroughly rejected PO's artificial "dead-end" argument, calling it "contrive[d]" and explaining that PO "improperly ignores, and, thus, fails to address, Chang II's clear teachings that the detection unit 134 is directly connected to the downstream port." FWD, 26). Applying "Chang II's clear teachings" as expressly proposed by Petitioner, the Board agreed no problem exists (even when

the detection unit is inside the bridge). *Id*., 25-29.

At bottom, there is simply no discrepancy with locating a detection unit inside (or outside) a bridge. Indeed, PO's own expert admitted as much, testifying that "a POSITA would understand that the location of the signal detection circuit was a matter of design choice." EX2001, ¶116. Simply put, the Board did not "disregard[]" any claim language.

D. PO's Secondary Considerations Assertions are Baseless

PO contends that "The Board Erred by Disregarding Unrebutted Evidence of Secondary Considerations Without Adequate Explanation." Br., 11. This assertion fails the red face test. Petitioner thoroughly addressed each secondary consideration PO argued, not only as to nexus but also the underlying merits.[4] *E.g.*, Paper 30 (Reply), 23-29. So, too, did the Board. FWD, 65-72.

PO's concession that "[t]he Board acknowledged that at least some of [PO]'s secondary considerations arguments were meritorious" and "[gave] 'some weight' to those arguments" (Br., 11) makes Petitioner's point—*i.e.*, the Board did not "summarily dismiss[] all of [PO's secondary consideration] arguments for purported lack of nexus" (Br., 11) as PO asserts, but conducted a wholistic analysis. FWD, 65-71. The Board "analyze[d] the arguments and evidence related

[4] Tellingly, PO's expert admitted he had no opinion on commercial acquiescence, unexpected results, and other secondary considerations. EX1085, 302:6-22, 34:25.

to [] secondary considerations" and made its unpatentability determination "based on consideration of all the arguments and evidence as a whole." FWD, 18.

Even if the Board had not found shortcomings with PO's nexus arguments/evidence and flaws for each secondary consideration, the Board noted that "a strong showing of obviousness may stand even in the face of considerable [secondary considerations] evidence." FWD, 65. In other words, given the "***strong preponderance*** of the evidence" of Petitioner's Ground on the technical merits (*id.*, 65, 72), even if PO's secondary consideration arguments were meritorious—they are not—PO would still lose and a remand would be futile.

1. PO's Nexus Arguments Are Baseless

PO's entire nexus argument was little over 1-page, and largely case cites. Paper 25 ("POR"), 81. In other words, PO relegated nexus to an afterthought. Moreover, PO's primary argument during the IPR was that "secondary considerations are the 'direct result of the unique characteristics of the claimed invention'" and that the "specific arrangement claimed in the patent" provided nexus. *Id.*, 82. But PO's Director Review request focuses only on "rebuttable presumption of nexus" (Br., 12), an underdeveloped argument to which PO devoted a single sentence in its POR (POR, 82).

PO's argument is that the Board erred because "PO's showing of nexus was backed by substantial evidence." Br., 9-10. This argument fails for two reasons:

(1) it rests on a false premise (*viz.*, an incorrect legal standard); and (2) PO's argument and evidence was improperly incorporated by reference.

First, the premise of PO's argument is that the Director should vacate (or reverse) if substantial evidence supported its nexus assertion. *E.g.*, Br., 5, 12. But the relevant question is not whether substantial evidence could support PO's failed argument, but whether substantial evidence supports the Board's actual findings in Petitioner's favor. In other words, PO's framing would only be correct had it prevailed before the Board, but it did not.

When the correct question is addressed, it is plain that there was no abuse of discretion or legal error. PO asserts its "[secondary consideration] evidence was unrebutted" (Br., 11), and cites testimony of Mr. Dreon (*id*., 12). This assertion is not credible. The Board addressed Mr. Dreon's fact testimony, finding it "based on hearsay" and that "the witness does not establish []any first-hand knowledge." FWD, 71. But the Board went further, noting that PO's nexus evidence for a "PACE Award" was "entitled to little weight." *Id*. The Board credited Petitioner's argument and evidence that the award was from a non-USB organization (which issued numerous awards for random things like "Cover Carving Technology" and "Electronic oil pump"), the reasons for the award included "lower cost," and that PO self-nominated and hosted "site tours" and "lunches" for the judges. *Id*. Against this counter-evidence, it cannot be said with a straight face that PO's

evidence was "unrebutted" or ignored by the Board.

Moreover, PO's own witness (Mr. Dreon) testified that other aspects of PO's product (undisputedly not claimed) were "very important" to customers. EX2042, 182:10-23 (the "cosmetic component" is "very important to our customers," as are "matching [] colors," "texture," "illumination," and "intensity within the dashboard"). And PO ignores the impact of other factors such as Apple's brand name, lower pricing, etc. Paper 30, 26. Further, it was undisputed PO "benefited from a head start due to early, insider access to Apple's confidential CarPlay requirements through the Jaguar car company." FWD, 55.

In summary, the Board's conclusions rest on solid footing. FWD, 67.

Second, the Board properly criticized PO's sole citation to a single paragraph (spanning 17-pages in its expert report) as procedurally insufficient and improper. FWD, 67. As the Board noted in a related IPR, this is improper incorporation by reference. IPR2024-00230, Paper 59, 16. PO complains that the Board ignored its "analysis for claims 8, 16, and 17 … in ¶¶152, 157, and 158" (Br., 12-13), but PO never cited these paragraphs (which span another 40-pages) in its POR. *See* POR (no cites to ¶¶149-158). This is textbook incorporation by reference and is an independent basis to deny Director Review.

2. The Board Evaluated All of PO's Secondary Considerations

PO asserts that the Board "Failed to Sufficiently Address" the alleged

secondary considerations. Br., 14. Not so. In addition to nexus failures, the Board found that the lion's share of PO's secondary considerations fail for other reasons as well. For example, the Board found that "[PO] fail[ed] to make a showing that there was any [***long-felt need***]" because the alleged need existed for "mere months before the '420 patent's priority date." FWD, 68. Regarding ***industry praise***, the Board found that "Petitioner's criticism of this purported evidence of industry praise has merit" for a host of reasons, and that "[PO]'s argument is based on hearsay and should not be considered." *Id.*, 70-71.

And with respect to alleged ***copying***, the Board found that "[PO]'s purported evidence of alleged copying by Petitioner is entitled to little or no weight because it is not well-supported." FWD, 71-72. The Board credited Petitioner's argument and "evidence that [PO] has th[e] timing wrong" (*viz.*, that Petitioner had already developed its product beforehand). *Id*. Concerning ***skepticism/failure of others***, the Board gave "some weight" to PO's assertions, but not more because of Petitioner's evidence that any skepticism resulted from a miscommunication with Apple, rather than any skepticism regarding the technical merits. *Id.*, 68-69. PO's assertion that the Board did not perform an analysis and that PO's evidence is "unrebutted" is baseless.

Finally, PO seeks to analogize this case to *Verizon Connect Inc. v. Omega Patents, LLC*, IPR2023-01162. Br., 12, 14. But this case is nothing like *Verizon*.

Not even close. To begin, the validity of the challenged patent in *Verizon* had been confirmed in six prior challenges (including district court, *inter partes* review, and *ex parte* reexam) with several decisions relying on secondary considerations.[5] *See* IPR2023-01162, Paper 37, 3 and Paper 38, 2. By contrast, Petitioner's IPR is the first challenge to the '420 patent so the Board was not creating inconsistent results.

Further, unlike in *Verizon* where the patentee actually made out its case in the POR brief, PO's nexus assertion relies on improper incorporation by reference as already discussed. This alone is dispositive in Petitioner's favor. And in *Verizon*, the Director noted the patentee's extensive licensing. IPR2023-01162, Paper 37, 2-3. But here it is undisputed that PO has never licensed the challenged patent. EX1085, 302:6-22, 303:4-304:25.

Additionally, the Board separately analyzed each secondary consideration and overwhelmingly found they lacked merit independent of nexus. Especially given Petitioner's "strong showing of obviousness" on the technical merits (FWD, 72), even if some nexus existed, the Board's decision would stand (*id.*, 65).

III. <u>CONCLUSION</u>

The Director should deny PO's request for Director Review.

---

[5] The Director noted a "jury verdict finding the claims not invalid and highlighting objective indicia of non-obviousness, and [an *ex parte* reexam] decision … [with persuasive] objective indicia of nonobviousness." IPR2023-01162, Paper 37, 2.

Respectfully submitted,

Dated: August 18, 2025

/Travis Jensen/

Travis Jensen, Reg. No. 60,087
Reg. No. 60,087
ORRICK, HERRINGTON &
SUTCLIFFE, LLP
1000 Marsh Road
Menlo Park, CA 94025
Telephone: (650) 614-7400
Facsimile: (650) 614-7401
Email: T61PTABDocket@orrick.com

Counsel for Petitioner

CERTIFICATE OF SERVICE

The undersigned certifies that on August 18, 2025, a copy of the following was served in its entirety via electronic mail, upon the following attorneys of record for the Patent Owner:

Adam R. Brausa Timothy Chen Saulsbury Eric C. Wiener Andrew L. Perito MORRISON & FOERSTER LLP 425 Market Street San Francisco, CA 94105	abrausa@mofo.com tsaulsbury@mofo.com ewiener@mofo.com aperito@mofo.com Microchip-Aptiv-PTAB@mofo.com
Alex S. Yap Mehran Arjomand Bryan Blumenkopf MORRISON & FOERSTER LLP 707 Wilshire Boulevard, Suite 6000 Los Angeles, CA 90017	ayap@mofo.com marjormand@mofo.com bblumen@mofo.com
Andrew T. Jones MORRISON & FOERSTER LLP 2100 L Street, NW, Suite 900 Washington, D.C. 20037	andrewjones@mofo.com

/Valerie Cloyd/
Valerie Cloyd