# AFFIDAVIT OF NATHANIEL E FRANK-WHITE

1. I am a Records Request Processor at the Internet Archive. I make this declaration of my own personal knowledge.

2. The Internet Archive is a website that provides access to a digital library of Internet sites and other cultural artifacts in digital form. Like a paper library, we provide free access to researchers, historians, scholars, and the general public. The Internet Archive has partnered with and receives support from various institutions, including the Library of Congress.

3. The Internet Archive has created a service known as the Wayback Machine. The Wayback Machine makes it possible to browse more than 450 billion pages stored in the Internet Archive's web archive. Visitors to the Wayback Machine can search archives by URL (i.e., a website address). If archived records for a URL are available, the visitor will be presented with a display of available dates. The visitor may select one of those dates, and begin browsing an archived version of the Web. Links on archived files in the Wayback Machine point to other archived files (whether HTML pages or other file types), if any are found for the URL indicated by a given link. For instance, the Wayback Machine is designed such that when a visitor clicks on a hyperlink on an archived page that points to another URL, the visitor will be served the archived file found for the hyperlink's URL with the closest available date to the initial file containing the hyperlink.

4. The archived data made viewable and browsable by the Wayback Machine is obtained by use of web archiving software that automatically stores copies of files available via the Internet, each file preserved as it existed at a particular point in time.

5. The Internet Archive assigns a URL on its site to the archived files in the format http://web.archive.org/web/[Year in yyyy][Month in mm][Day in dd][Time code in hh:mm:ss]/[Archived URL] aka an "extended URL". Thus, the extended URL http://web.archive.org/web/19970126045828/http://www.archive.org/ would be the URL for the record of the Internet Archive home page HTML file (http://www.archive.org/) archived on January 26, 1997 at 4:58 a.m. and 28 seconds (1997/01/26 at 04:58:28). The date indicated by an extended URL applies to a preserved instance of a file for a given URL, but not necessarily to any other files linked therein. Thus, in the case of a page constituted by a primary HTML file and other separate files (e.g., files with images, audio, multimedia, design elements, or other embedded content) linked within that primary HTML file, the primary HTML file and the other files will each have their own respective extended URLs and may not have been archived on the same dates.

6. Attached hereto as Exhibit A are true and accurate copies of screenshots of the Internet Archive's records of the archived files for the URLs and the dates specified in the attached coversheet of each printout.



Microchip Ex. 1061, p. 1
Microchip v. Aptiv
IPR2024-00229

INTERNET ARCHIVE
archive.org

7. Attached hereto as Exhibit B are true and accurate copies of the Internet Archive's records of the archived files for the URLs and the dates specified in the attached coversheet of each file.

8. I declare under penalty of perjury that the foregoing is true and correct.

DATE: 08/09/2023

Nathaniel Frank-White

Nathaniel E Frank-White

**Please see attached All Purpose Jurat form for additional Notary Events**



**Microchip Ex. 1061, p. 2**
**Microchip v. Aptiv**
**IPR2024-00229**

# EXHIBIT A



**Microchip Ex. 1061, p. 3**
**Microchip v. Aptiv**
**IPR2024-00229**

https://web.archive.org/web/20111016142920/http:/www.fairchildsemi.com/tree/signal-path-ics/switches/usb-switches/

INTERNET ARCHIVE WaybackMachine http://www.fairchildsemi.com/tree/signal-path-ics/switches/usb-switches/ Go AUG OCT DEC 16 2010 2011 2012 About this capture
12 captures
26 Jul 2010 - 12 May 2012



**Filter results**

**Function**
Multimedia Switch (8)
USB Switch (26)

**Package Type**
DQFN (5)
MicroPak (13)
MLP (1)
MSOP (6)
QSOP (1)
TSSOP (2)
UMLP (17)
US8 (2)
WL-CSP (1)

**Crosstalk**
-120 dB - -100 dB (1)
-100 dB - -80 dB (1)
-80 dB - -60 dB (10)
-60 dB - -40 dB (18)
-40 dB - -20 dB (5)

**ESD**
2 kV - 4 kV (8)
4 kV - 6 kV (7)
6 kV - 8 kV (11)
8 kV - 10 kV (6)
14 kV - 16 kV (5)

**Leakage Current**
0.05 uA (1)
0.1 uA (1)
0.5 uA (1)
1 uA (10)
2 uA (4)
3 uA (1)
10 uA (8)

**Number of Switches**
1 (14)
2 (8)
3 (2)
4 (1)
5 (1)

**On Resistance**
0 Ohm - 2 Ohm (2)
2 Ohm - 4 Ohm (7)
4 Ohm - 6 Ohm (3)
6 Ohm - 8 Ohm (12)
8 Ohm - 10 Ohm (6)

**Product Family**
USB Switches (26)

**Supply Voltage Range**
1.65 - 5.5 (1)
2.5 - 4.4 (2)
2.7 - 4.3 (2)
2.7 - 4.5 (1)
2.7 - 5.5 (1)
3 - 4.4 (3)
3.0 - 3.4 (1)
3.0 - 3.6 (4)
3.0 - 4.3 (8)
3.0 - 4.4 (2)
4.0 - 6.0 (1)

**Switches Configuration**
2:1 (2)
3:1 (2)
3:1 with Charge D... (2)
3PDT (1)
4:1 (1)
DCP CDP Charge De... (1)
DPDT (12)
DPST (1)
SPDT (1)
SPDT (NO/NC) (1)
SPST (1)
USB and Headphone... (1)

**Off Isolation**
-100 dB - -80 dB (3)
-80 dB - -60 dB (6)
-60 dB - -40 dB (9)
-40 dB - -20 dB (13)

**TTL Control Inputs**
No (7)
Yes (15)

**Undershoot Protection**
No (18)
Yes (4)

**Bandwidth**
250 MHz (1)
350 MHz (1)
720 MHz (13)

Search ☐ Search within the current results Start Over!

*Function = USB Switch*

*Your request so far:* **Function** USB Switch (26) ✕

## Product Parametric Data

COMPARE

**USB Switches (26)** View All Parameters Download to Excel Download to PDF

| Part Number | Switches Configuration | Number of Switches | Bandwidth | ESD | Package Type | Function | Select All/None |
|---|---|---|---|---|---|---|---|
| NEW FSA9285 MCPC Compliant USB Port Multimedia Switch with Accessory Detection | 3PDT | 5 | | 5.0 | WL-CSP | Multimedia Switch USB Switch | ☐ |
| NEW FSA880 USB Port 2:1 Switch with Accessory and Charger Detection | 2:1 | 1 | | 15.0 | UMLP | USB Switch | ☐ |
| NEW FSUSB74 High Speed USB 2.0 Switch/Multiplexer | 4:1 | 1 | | 2.0 | MLP, UMLP | USB Switch | ☐ |
| NEW FSUSB73 High Speed USB 2.0 Switch/Multiplexer | 3:1 | 1 | | 2.0 | UMLP | USB Switch | ☐ |
| NEW FSA831 USB2.0 High-Speed (480Mbps) Charger Detection with Isolation Switch | DCP CDP Charge Detection | 2 | | 15.0 | MicroPak | USB Switch | ☐ |
| NEW FSA881 USB Port 2:1 Switch with Accessory and Charger Detection | 2:1 | 1 | | 15.0 | UMLP | USB Switch | ☐ |
| FSUSB42 Low Power, Two-Port, Hi-Speed USB2.0 (480Mbps) Switch | DPDT | 1 | 720.0 | 8.0 | MSOP, UMLP | USB Switch | ☐ |
| FSUSB30 Low Power 2-Port Hi-Speed USB 2.0 (480 Mbps) Switch | DPDT | 1 | 720.0 | 8.0 | DQFN, MSOP, MicroPak, UMLP | USB Switch | ☐ |
| FSA221 Multimedia and USB 2.0 Hi-Speed and Audio Switches w/ Negative Signal Capability | DPDT | 1 | 720.0 | 7.0 | MSOP, MicroPak, UMLP | Multimedia Switch USB Switch | ☐ |
| FSA223 Multimedia and USB 2.0 Hi-Speed and Audio Switches w/ Negative Signal Capability | DPDT | 1 | 720.0 | 7.5 | MSOP, MicroPak, UMLP | Multimedia Switch USB Switch | ☐ |
| FSA9280A USB 2.0 Accessory Detection Switch w/ 28V FET | 3:1 with Charge Detection | 3 | 720.0 | 4.0 | UMLP | Multimedia Switch USB Switch | ☐ |
| FSUSB31 Low Power Dual SPST Hi-Speed USB 2.0 (480 Mbps) Switch | SPST | 2 | 720.0 | 7.5 | MicroPak, UMLP, US8 | USB Switch | ☐ |
| FSUSB63 3:1 HS - USB Switch / Multiplexer | 3:1 | 1 | 830.0 | 16.0 | UMLP | USB Switch | ☐ |
| FSUSB11 Low Power Full Speed USB Switch | SPDT (NO/NC) | 2 | 350.0 | 8.0 | MicroPak, TSSOP | USB Switch | ☐ |
| FSUSB45 Hi-Speed USB2.0 (480Mbps) Switch w/Dedicated Charger Port Detect | DPDT | 2 | 720.0 | 8.0 | MicroPak, UMLP | USB Switch | ☐ |
| FSA9288A USB 2.0 Accessory Detection Switch w/ 28V FET | 3:1 with Charge Detection | 3 | 720.0 | 4.0 | UMLP | Multimedia Switch USB Switch | ☐ |
| FSUSB20 Low Power 1 Port Hi-Speed USB (480Mbps) Switch | DPDT | 2 | 750.0 | 4.0 | DQFN, MSOP, MicroPak | USB Switch | ☐ |
| FSUSB22 Low Power 2 Port Hi-Speed USB 2.0 (480Mbps) Switch | SPDT | 4 | 800.0 | 4.0 | DQFN, QSOP, TSSOP | USB Switch | ☐ |
| FSUSB46 Hi-Speed USB2.0 (480Mbps) DPST Switch with Dedicated Charger Port Detection | DPST | 2 | 720.0 | 16.0 | MicroPak, UMLP, US8 | USB Switch | ☐ |
| FSUSB23 Low Power Hi-Speed USB 2.0 (480 Mbps) Switch | DPDT | 1 | 750.0 | 7.0 | DQFN, MicroPak | USB Switch | ☐ |
| FSUSB40 Low Power, Two-Port, Hi-Speed USB2.0 (480Mbps) Switch | DPDT | 1 | 720.0 | 7.0 | MicroPak, UMLP | USB Switch | ☐ |
| FSA201 Multimedia, USB 2.0 and Audio Switch | DPDT | 2 | 250.0 | 2.0 | MSOP, MicroPak | Multimedia Switch USB Switch | ☐ |
| FSA2000 Auto Selecting HS-USB Switch with Cap-Free Headphone Audio Amplifier | USB and Headphone Amp | 2 | 720.0 | 4.0 | UMLP | Multimedia Switch USB Switch | ☐ |
| FSA203 Multimedia, Hi-Speed USB, Video, and Negative Swing Audio Switch with Video Amp/Filter | DPDT | 1 | 780.0 | 5.5 | DQFN | Multimedia Switch USB Switch | ☐ |
| FSUSB43 Low Power, Two-Port, Hi-Speed, USB2.0 (480Mbps) Switch | DPDT | 1 | 720.0 | 8.0 | MicroPak | USB Switch | ☐ |
| FSUSB104 Low Power, Two-Port, Hi-Speed USB2.0 (480Mbps) Switch | DPDT | 1 | 720.0 | 8.0 | UMLP | USB Switch | ☐ |

1 - 26 of 26 [Part Number] Page : 1



**Microchip Ex. 1061, p. 5**
**Microchip v. Aptiv**
**IPR2024-00229**

750 MHz (2)
780 MHz (1)
800 MHz (1)
830 MHz (1)

**Max T Off**

0 ns - 100 ns (15)
900 ns - 1000 ns (1)
1000 ns - 1100 ns (1)
1900 ns - 2000 ns (1)
2000 ns - 2100 ns (1)
9900 ns - 10000 ns (1)

**Max T On**

0 ns - 500 ns (15)
500 ns - 1000 ns (1)
1000 ns - 1500 ns (1)
1500 ns - 2000 ns (1)
2000 ns - 2500 ns (1)
9500 ns - 10000 ns (1)

**R On Flatness**

0 Ohm - 0.5 Ohm (7)
0.5 Ohm - 1 Ohm (7)
1 Ohm - 1.5 Ohm (3)
1.5 Ohm - 2 Ohm (4)
2 Ohm - 2.5 Ohm (4)

Products | Applications | Design Support | About Fairchild
Investor Relations | Careers | Contact Us | Site Map | RSS
Privacy Policy | Site Terms & Conditions | Standard Terms & Conditions of Sale
© Copyright 2011 Fairchild Semiconductor. All rights reserved.
Saving our world, 1mW at a time™



**Microchip Ex. 1061, p. 6**
**Microchip v. Aptiv**
**IPR2024-00229**

INTERNET ARCHIVE WayBackMachine
http://www.ali.com.tw/eng/product/peripheral/m5632.htm
Go
14 captures
17 Nov 2002 - 28 Oct 2005
NOV FEB 13 JUN
2002 2003 2004
About this capture
Select a Site

Acer Labs

Quick Search

Go

Advance Search

ABOUT ALi

NEWS & EVENTS

SUPPORT

CONTACT US

# M5632

## USB2.0 Host-to-Host Networking Controller

### Product Overview

ALi's M5632 Host-to-Host Networking Controller provides an USB-based networking solution for two or more USB hosts of PC /Notebook. Designed with the proprietary power-saving technology, M5632 is a low-power single-chip solution with built-in two USB2.0 transceiver/controllers with embedded ping-pong FIFOs for optimized throughput. Through ALi's proprietary auto detecting and switching method between USB High-Speed (HS) and Full-Speed (FS), ALi M5632 supports a user-friendly oriented host-to-host networking application via both USB2.0 and USB1.1 interfaces.

### Features

- USB Specification revision 2.0 Compliant
- Glueless Single-chip Integration with two on-chip USB2.0 Transceivers, Controllers and Ping-Pong FIFOs
- User-Configurable Endpoints for Each USB2.0 Controller
  - Endpoint 0 : 64-byte FIFO support for Control transfer
  - Endpoint A : 512-byte Ping-Pong buffers for Bulk-In transfer
  - Endpoint B : 512-byte Ping-Pong buffers for Bulk-Out transfer
  - Endpoint C : 16-byte Ping-Pong buffers for Interrupt transfer
- Proprietary Auto-detecting and Switching Design to Support Three Kinds of Transfer Operation, i.e. □ochHS vs. HS□och, □ochHS vs. FS□och, □ochFS vs. FS□
- Built-in high-performance micro-controller for interface and flow control
- General Serial EEPROM Interface Support for Vendor USB ID specification
- Built-in Clock Synthesizer for using low-cost 12Mhz crystal or ext 12Mhz clock sources
- 48-pin LQFP package, 2.5/3.3V Low-power CMOS Technology
- Support Standard NDIS Compliant Driver or Customized Linker Utility

**Documentation**

M5632 Product Brief

**Marketing Reference**

M5632 Chip Photo (HiRes)

**Press Release**

ALi Launches High-Speed USB2.0 Host-to-Host Networking Controller
-M5632 Leads in Flexibility, Cost and Performance



Microchip Ex. 1061, p. 8
Microchip v. Aptiv
IPR2024-00229

https://web.archive.org/web/20000303183139/http://www.cypress.com/usb/datasheets.html

INTERNET ARCHIVE WayBackMachine http://www.cypress.com/usb/datasheets.html Go MAY MAR 03 MAY 1999 2000 2001 About this capture
49 captures
19 Feb 1999 - 8 May 2021

## UNIVERSAL SERIAL BUS (USB)

- Data Sheets
- Application Notes
- Tech Support
- Technical Articles
- Development Tools
- Reference Designs

- Low-Speed Microcontrollers
- Full-Speed USB Microcontrollers
- USB Hub and Integrated Hub Solutions
- High-Speed USB Microcontrollers (coming soon)
- USB Development Tools
- USB Programming Tools

### Low-Speed Microcontrollers

*Cypress M8 Series (M8 Core w/ EPROM)*

| Device | Description |
|---|---|
| CY7C63000A | Low-Speed USB Microcontroller (2K EPROM, Low I/O, Two Endpoints) |
| CY7C63001A | Low-Speed USB Microcontroller (4K EPROM, Low I/O, Two Endpoints) |
| CY7C63100A | Low-Speed USB Microcontroller (2K EPROM, Low I/O, Two Endpoints) |
| CY7C63101A | Low-Speed USB Microcontroller (4K EPROM, Low I/O, Two Endpoints) |
| CY7C63411 | Low-Speed USB Microcontroller (4K EPROM, High I/O, Three Endpoints) |
| CY7C63412 | Low-Speed USB Microcontroller (6K EPROM, High I/O, Three Endpoints) |
| CY7C63413 | Low-Speed USB Microcontroller (8K EPROM, High I/O, Three Endpoints) |
| CY7C63511 | Low-Speed USB Microcontroller (4K EPROM, High I/O, Three Endpoints) |
| CY7C63512 | Low-Speed USB Microcontroller (6K EPROM, High I/O, Three Endpoints) |
| CY7C63513 | Low-Speed USB Microcontroller (8K EPROM, High I/O, Three Endpoints) |
| CY7C63612 | Low-Speed USB Microcontroller (6K EPROM, Low I/O, Three Endpoints) |
| CY7C63613 | Low-Speed USB Microcontroller (8K EPROM, Low I/O, Three Endpoints) |

### Full-Speed USB Microcontrollers

**Cypress M8 Series (M8 Core w/ 8K EPROM)**

| Device | Description |
|---|---|
| CY7C64013 | Medium Performance Full-Speed USB Microcontroller (Low I/O) |
| CY7C64113 | Medium Performance Full-Speed USB Microcontroller (High I/O) |

**EZ-USB Series (Enhanced 8051 Core w/ RAM)**

The EZ-USB ***Technical Reference Manual*** provides full device information for the following parts listed below. Download the long form PDF datasheet (3.41Mb) or click on any product number below to view the short form one page datasheet for the AN21XX parts.

| Device | Description |
|---|---|
| AN2121SC | Full-Speed USB Microcontroller (4K RAM, 16 I/O, Isochronous Support) |
| AN2122SC | Full-Speed USB Microcontroller (4K RAM, 16 I/O, Bulk Only) |
| AN2125SC | Full-Speed USB Microcontroller (4K RAM, 8 I/O, 8-bit Databus, Isochronous Support) |
| AN2126SC | Full-Speed USB Microcontroller (4K RAM, 8 I/O, 8-bit Databus, Bulk Only) |
| AN2131SC | Full-Speed USB Microcontroller (8K RAM, 16 I/O, Isochronous Support) |
| AN2135SC | Full-Speed USB Microcontroller (8K RAM, 8 I/O, 8-bit Databus, Isochronous Support) |
| AN2136SC | Full-Speed USB Microcontroller (8K RAM, 8 I/O, 8-bit Databus, Bulk Only) |
| AN2131QC | Full-Speed USB Microcontroller (8K RAM, 24 I/O, 8-bit Databus, Memory Expansion Port, Isochronous Support) |

**EZ-Link Series**

| Device | Description |
|---|---|
| AN2720SC-01 | EZ-Link Single Chip Solution for USB Networking (includes drivers) |

### USB Hub and Integrated Hub Solutions

*Cypress M8 Series (M8 Core w/ EPROM)*

| Device | Description |
|---|---|
| CY7C65013 | 7-Port USB Standalone Hub |
| CY7C65113 | 4-Port USB Standalone Hub |
| CY7C66013 | Full-Speed USB Microcontroller with Integrated Hub (Low I/O) |
| CY7C66113 | Full-Speed USB Microcontroller with Integrated Hub (High I/O) |

### High-Speed Microcontrollers

(coming soon)

### USB Development Tools

| Device | Description |
|---|---|
| CY3650 | CY7C630/31xx Development Kit |
| CY3651 | CY7C634/35/36xx Development Kit |
| CY3652C | CY7C64/65/66xxx Development Kit |
| AN2131-DK001 | EZ-USB Series Development Kit |



Microchip Ex. 1061, p. 10
Microchip v. Aptiv
IPR2024-00229

| | |
|---|---|
| CY3671 | EZ-USB FX Series Development Kit |
| CY3649-110V/220V | Hi-Lo Programmer for Cypress M8 Series |
| CY3660R100-CC | C-Compiler for Windows (Cypress M8 Series Only) |
| CY3661R100-CC | C-Compiler for DOS (Cypress M8 Series Only) |



Please email your comments on this site to Webmaster.
© Copyright 1995-1999. Cypress Semiconductor Corporation. All rights reserved.
Terms & Conditions | Year 2000



Microchip Ex. 1061, p. 11
Microchip v. Aptiv
IPR2024-00229

# PL-2501

## Hi-Speed USB Host to Host Bridge Controller

### Overview

The PL-2501 is a single chip Hi-Speed USB Host-to-Host Bridge Controller. With PL-2501 embedded cable, users can quickly transfer large amount and large size of files directly from one PC to another. Also it's useful for computer data backup/restore, synchronization or file sharing. Additionally, the chip enables two or more Hi-Speed USB or USB1.1 equipped PCs to connect to each other using USB ports as a network. Since Hi-Speed USB extends the speed up to 480 Mbps – 40 times more than previous USB, the network constructed by PL-2501 has data rates almost 5 times faster than a conventional 100BT Ethernet network. Implemented with remote NDIS, users can easily build up this network at a turbo speed without the troubled installation of drivers and add-on network interface cards.

### Features

- Full compliance with the USB Specification v2.0
- On-chip USB2.0 Phy
- Support both Peer to Peer and Network functions
- Transfer data and share resources between two or more PCs with speed up to 480Mbps.
- Remote NDIS specification compliant (For network function only)
- Embedded Turbo 8032 micro-controller
- Supports USB Full/High Speed Control/Interrupt/Bulk Endpoints Transfer
- On-Chip 3.3V-2.5V regulator for internal circuit
- Dual data buffer supporting two-way data transfer
- Supports Suspend, Resume and Remote wake-up power management features
- Supports external serial EEPROM to customize vender/product related information
- Supports LED indicator for connection and transfer status
- Support external customized program ROM via 100-pin LQFP package
- Bus powered from either USB port
- No glue logic needed – can be embedded in small spaces
- 64/100 Pins LQFP packages

View/Download PDF format

PROLIFIC TECHNOLOGY INC.

INTERNET ARCHIVE WayBackMachine http://www.genesyslogic.com/gl620aucb.htm Go MAR APR JUN
14 captures 23 Apr 2001 - 13 Nov 2007 2000 23 2001 2002 About this capture

Products



# GeneLink USB PC-to-PC Networking Controller GL620USB-A

## General Description

The GL620USB-A provides a single-chip solution for networking two or more PCs via their USB ports. According to USB protocol, the PC is the host and the device is a slave, where the host initiates all the USB traffic and the slave responds to the host's requests. In other words, a host cannot talk to another host via USB protocol; instead, a host can only talk to one or more devices. The GL620USB-A's patent-pending architecture overcomes the USB inherently incompatibility of connecting two or more PCs by providing two independent USB transceivers and SIEs for each host, i.e., data can be transferred in both directions simultaneously.

The network driver software comes with GL620USB-A can connect 2 or more PCs via USB ports easily, and the plug-and-play nature of USB protocol makes the installation and usage of end products very simple. Working with a full-featured driver, the GL620USB-A can perform the following functions:

- File transfer
- Ethernet emulation
- Storage device sharing : hard drive, CD-ROM, floppy, iK
- Printer sharing
- Internet sharing

The GL620USB-A networking function can be integrated with the following form factors:

- USB standalone cable
- USB standalone hub
- USB monitor with hub
- PC host

## Features

- Conforms to USB 12Mbps Specification, Version 1.1
- Patent-pending architecture
- Single chip solution for host-to-host communication
- Network driver (NDIS standard) support running on Windows 98 and Windows 2000
- Support TCP/IP, NetBEUI, IPX/SPX protocols
- Up to 8.6Mbps transfer rate I Suitable for mobile and SOHO environment
- Tiniest solution in the market - 16-pin SOP
- On-chip 3.3V output
- 12MHz external clock
- Internal power-on reset
- Power management support

**Data Sheets Download**

1997,2000 Genesys Logic, Inc.



Microchip Ex. 1061, p. 15
Microchip v. Aptiv
IPR2024-00229

INTERNET ARCHIVE WayBackMachine http://www.genesyslogic.com/info.htm Go DEC APR JUN
7 captures 10
12 Dec 2000 - 12 Jun 2002 2000 2001 2002 About this capture

# Corporate Info

Genesys Logic Inc. is a leading design company of advanced integrated circuits for the personal computer, consumer, and industrial markets. With a focus on innovative USB device controller solutions that make its customers to differentiate their products, enable faster time to market, increase performance, and reduce cost, Genesys Logic is committed to technology leadership in USB world. Also, the company's expertise in mixed-signal design results in its market leader position in system hardware monitors, which is indispensable in modern PC motherboard. Genesys Logic's broad portfolio of products include an extensive family of USB controllers (mouse, joystick, game pad, keyboard, scanner, printer, monitor, PC camera and audio), a series of system hardware monitor for Socket 7 and Slot 1 motherboard, and a variety of embedded system ASICs for consumer electronic products and legacy PC peripherals. Advancing its products in above areas, as well as helping to evolve new industry standards (e.g. IEEE 1394) is Genesys Logic's commitment to its customers.

Founded in March 1997 and headquartered in *Taipei, Taiwan*, Genesys Logic was privately held with strong funding support by venture capital before June 1999 and now is a public, fast growth and technology leading company. Genesys Logic's technical staves have broad knowledge of the most advanced design methodologies, design tools, industry standards, process technologies, and programming skill. Their experiences include PC chipset, USB host controller, graphic accelerator, IDE controller, Ethernet controller, micro-controller and other PC-related controller ICs. Not only the ability of IC designing, also Genesys Logic is more proud of its capability of providing total solution to its customers, which includes firmware, BIOS, driver, and application software. Instead of a pure IC vendor, the company would like to play more roles as hardware and software consultant of its customers. In today's highly competitive IC business, the key for Genesys Logic to succeed is its technical support, which is far beyond what traditional FAE can do. Genesys Logic creates extra values for each individual customer, it means that Genesys Logic customizes its firmware and application software upon customer's request. The company's solid software team helps its customer to distinguish itself in the market and creates the long-time partnership with its customer.

Genesys Logic's leadership strategy is to foresee future market trend ahead of its competitors and be first-to-market with increased level of functional integration. With strong IC foundry relationship, Genesys Logic uses leading-edge IC process to manufacture the most integrated and cost-effective products. Since its founding, the company has proven its ability to consistently deliver high-quality semiconductor products in volume, and the fastest development rate in the industry. Genesys Logic will continue to demonstrate its ability in those technologies, such as USB, 1394, mixed-signal, and embedded-system design, and to deliver products for the computer, consumer, and multi-market mixed-signal market.

1997,2000 Genesys Logic, Inc.



Microchip Ex. 1061, p. 17
Microchip v. Aptiv
IPR2024-00229

# EXHIBIT B



Microchip Ex. 1061, p. 18
Microchip v. Aptiv
IPR2024-00229

https://web.archive.org/web/20030608093807/http://www.ali.com.tw/images/documentation/m5632pbrf.pdf

**FEATURES :**

+ **USB Specification revision 2.0 Compliant**
+ **Glueless Single-chip Integration** with two on-chip USB2.0 Transceivers, Controllers and Ping-Pong FIFOs
+ **User-Configurable Endpoints for Each USB2.0 Controller**
  - Endpoint 0 : 64-byte FIFO support for Control transfer
  - Endpoint A : 512-byte Ping-Pong buffers for Bulk-In transfer
  - Endpoint B : 512-byte Ping-Pong buffers for Bulk-Out transfer
  - Endpoint C : 16-byte Ping-Pong buffers for Interrupt transfer
+ **Proprietary Auto-detecting and Switching Design** to Support Three Kinds of Transfer Operation, i.e. “HS vs. HS”, “HS vs. FS”, “FS vs. FS”
+ **Built-in high-performance micro-controller** for interface and flow control
+ **General Serial EEPROM Interface Support** for Vendor USB ID specification
+ **Built-in Clock Synthesizer** for using low-cost 12Mhz crystal or ext 12Mhz clock sources
+ **48-pin LQFP package, 2.5/3.3V Low-power CMOS Technology**
+ **Support Standard NDIS Compliant Driver or Customized Linker Utility**

ALi's M5632 Host-to-Host Networking Controller provides an USB-based networking solution for two or more USB hosts of PC /Notebook. Designed with the proprietary power-saving technology, M5632 is a low-power single-chip solution with built-in two USB2.0 transceiver/controllers with embedded ping-pong FIFOs for optimized throughput. Through ALi’s proprietary auto detecting and switching method between USB High-Speed (HS) and Full-Speed (FS), ALi M5632 supports a user-friendly oriented host-to-host networking application via both USB2.0 and USB1.1 interfaces.

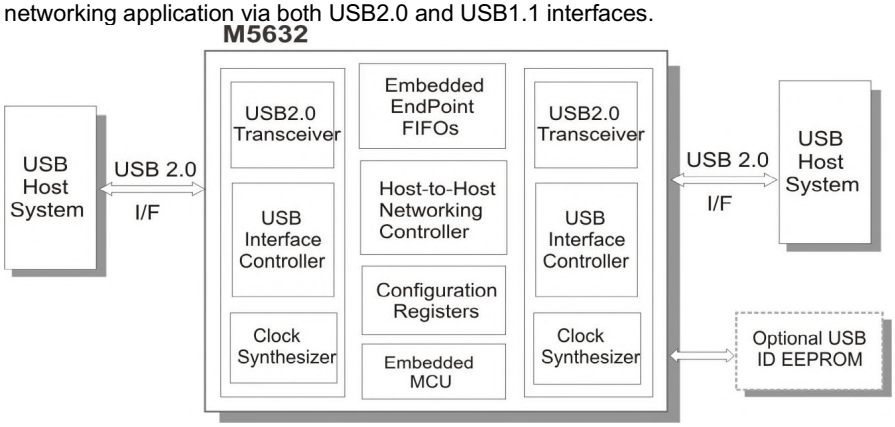


Sep 15, 2002 Document no. : 5632brf.doc
*ALi Corporation : 2F, 246, NeiHu Rd., Sec 1, Taipei, 114, R.O.C. Tel: 886-2-8752-2000, Fax: 886-2-8751-1001*
*Homepage : http://www.ali.com.tw*



**Microchip Ex. 1061, p. 20**
**Microchip v. Aptiv**
**IPR2024-00229**

https://web.archive.org/web/20000530232333/http://www.cypress.com/pub/datasheets/2720scpb.pdf

# Anchor Chips Single-Chip EZ-Link (AN2720SC)

## Features

- Tiniest completely integrated solution in the market
- 32 PQFP
- Only requires crystal for full implementation
- Meets difficult suspend current of 500 uA for both hosts
- 2K data buffer for maximum speed transfer
- Greater than 4 Mbps data transfer rate
- Low power – Less than 100 mW power

## Overview

The Anchor Chips AN2720SC provides a single-chip solution for networking two computers via their USB ports. In a USB system, the PC acts as a host, which initiates all USB traffic. USB devices act as slaves, which respond to host requests. It is inherently incompatible to connect two PCs together via a simple USB cable, since a master (host) cannot talk to another master (host). A master can talk only to one or more slave devices.

The AN2720SC overcomes this "peer-to-peer" incompatibility by providing two USB devices, one for each PC. Two independent Serial Interface Engines (SIE) exchange data through a 2 kilobyte FIFO. Thus, USB data transmitted by one computer is made available to the other computer through the AN2720SC. The connection is full duplex– data can be transferred in both directions simultaneously.

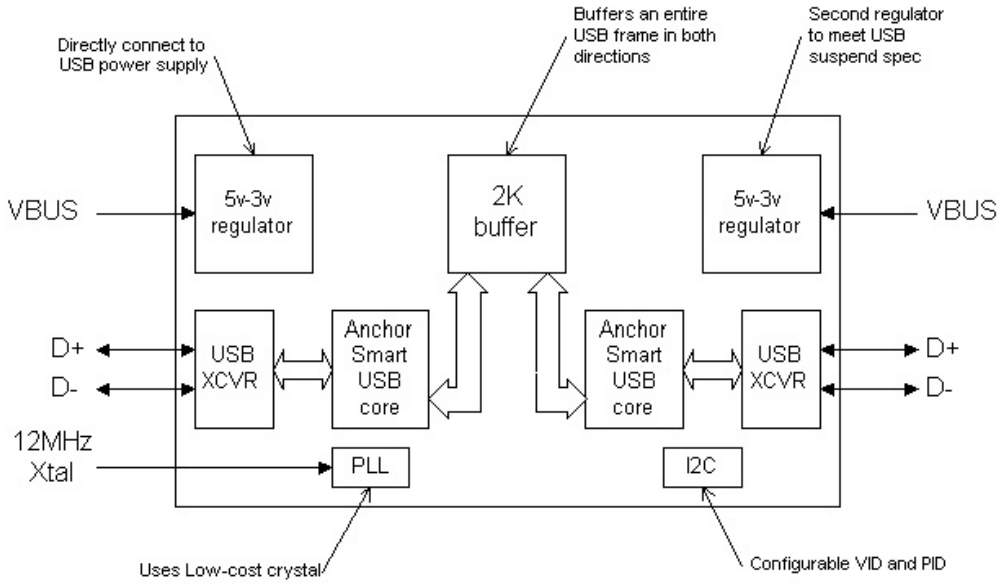


**AN2720SC Block Diagram System Application**




**Microchip Ex. 1061, p. 22**
**Microchip v. Aptiv**
**IPR2024-00229**

## Applications and Markets

The use of the AN2720SC and special network driver software provided by Anchor Chips allows very simple and efficient networking between PCs. The "plug-and-play" nature of USB makes connecting two computers (even when powered) very simple. With the AN2720SC, simple networking can be provided in numerous form factors including:

- USB standalone hubs
- Computer monitors with USB hubs
- Standalone USB cable

Depending on the driver set used, the AN2720SC can perform the following functions:

- USB networking
- File transfer
- Windows CE synchronization
- Printer sharing

## Software

The software provided by Anchor Chips runs on Windows 95 and Windows 98 and is a miniport device driver software which emulates a network interface connector. It manages the USB protocol and the PC-to-PC data flow. The EZ-Link Ethernet device driver is written to the NDIS (Network Driver Interface Specification) standard and provides a standard Windows interface to the resources of the hardware. To the end user, EZ-Link appears and behaves like an Ethernet card even though no physical network interface card is present. Thus, users can use standard Windows interface such as Windows Explorer, Network Neighborhood and standard file sharing security features. Bridging software that allows users to access corporate LANs will be available in first quarter1999.

## System Diagram

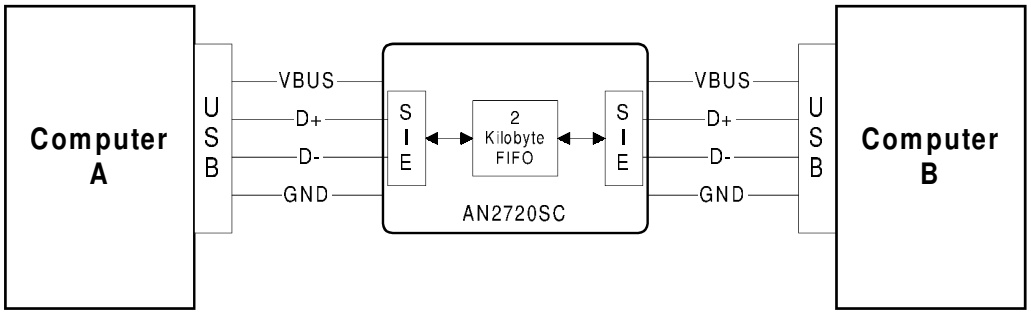


**Anchor Chips Incorporated**
12396 World Trade Drive • M/S 212 • San Diego, CA 92128
Voice (619) 613-7900 • Fax (619) 676-6896
**Anchor Chips Incorporated Europe**
Saville Court • Saville Place • Clifton • Bristol BS8 4EJ • UK
Voice (44) 117 9001606 • Fax (44) 117 9237598
www.anchorchips.com
www.ezlinkusb.com

ANCHORCHIPS

EZ-Link and EZ-USB are trademarks of Anchor Chips Incorporated.
Specifications are subject to change without notice. Patients pending.
© 1998, Anchor Chips Incorporated All rights reserved. 11/98



Microchip Ex. 1061, p. 23
Microchip v. Aptiv
IPR2024-00229

https://web.archive.org/web/20030308180208fw_/http://www.prolific.com.tw/PDF/PL-2501%20Product%20Brochure%20091102.pdf

# PL-2501
# Hi-Speed USB Host to Host Bridge Controller

## OVERVIEW

The PL-2501 is a single chip Hi-Speed USB Host-to-Host Bridge Controller. With PL-2501 embedded cable, users can quickly transfer large amount and large size of files directly from one PC to another. Also it's useful for computer data backup/restore, synchronization or file sharing. Additionally, the chip enables two or more Hi-Speed USB or USB1.1 equipped PCs to connect to each other using USB ports as a network. Since Hi-Speed USB extends the speed up to 480 Mbps – 40 times more than previous USB, the network constructed by PL-2501 has data rates almost 5 times faster than a conventional 100BT Ethernet network. Implemented with remote NDIS, users can easily build up this network at a turbo speed without the troubled installation of drivers and add-on network interface cards.

## BLOCK DIAGRAM

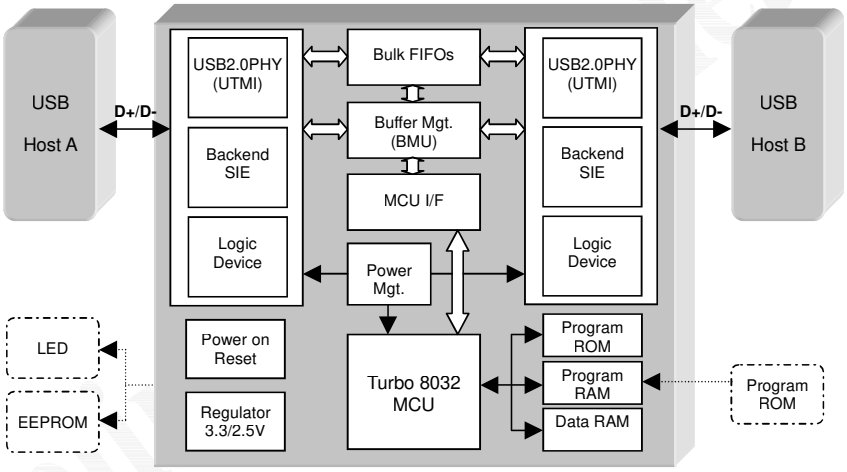


## FEATURES

- Full compliance with the USB Specification v2.0
- On-chip USB2.0 Phy
- Support both Peer to Peer and Network functions
- Transfer data and share resources between two or more PCs with speed up to 480Mbps.
- Remote NDIS specification compliant (For network function only)
- Embedded Turbo 8032 micro-controller
- Supports USB Full/High Speed Control/Interrupt/Bulk Endpoints Transfer
- On-Chip 3.3V-2.5V regulator for internal circuit
- Dual data buffer supporting two-way data transfer
- Supports Suspend, Resume and Remote wake-up power management features
- Supports external serial EEPROM to customize vender/product related information
- Supports LED indicator for connection and transfer status
- Support external customized program ROM via 100-pin LQFP package
- Bus powered from either USB port
- No glue logic needed – can be embedded in small spaces
- 64/100 Pins LQFP packages

**Prolific Technology Inc.**
7F, #48, Sec.3, Nan-Kang Rd., Taipei, Taiwan 115, ROC
Tel: 886-2-2654-6363 Fax: 886-2-2654-6161
E-mail : sales@prolific.com.tw
http://www.prolific.com.tw



Microchip Ex. 1061, p. 25
Microchip v. Aptiv
IPR2024-00229

https://web.archive.org/web/20011116224331/http://www.genesyslogic.com/pdf/GeneLink_Network_gl620usb_a_r16.PDF

# GL620USB-A

## GeneLink
## USB PC-to-PC Networking Controller

*SPECIFICATION 1.6*

Nov 17, 2000

**Genesys Logic, Inc.**
10F, No.11, Ln.3, Tsao Ti Wei, Shenkeng, Taipei, Taiwan
Tel: 886-2-2664-6655 Fax: 886-2-2664-5757
http://www.genesyslogic.com

Document Id: 3E771AA0-3662-11EE-8202-035A8D429FDD
OnlineNotary.net



**Microchip Ex. 1061, p. 27**
**Microchip v. Aptiv**
**IPR2024-00229**

# Index

1. Features ..... 3
2. Functional Overview ..... 4
3. Applications ..... 5
4. Functional Description ..... 6
5. Driver Support ..... 8
6. Pin Definitions and Descriptions ..... 10
7. Electrical Characteristics ..... 11
   *7.1 Absolute Maximum Ratings (Voltages referenced to GND) ..... 11*
   *7.2 DC Characteristics (VCP/D+/D-) ..... 11*
   *7.3 DC Characteristics (PIN1, 2) ..... 11*
   *7.4 DC Characteristics (PIN10, 11) ..... 12*
   *7.5 DC Characteristics (PIN14, 15) ..... 12*
   *7.6 Switching Characteristics ..... 12*
8. Package Diagram ..... 13
9. Application Circuit ..... 14



Document Id: 3E771AA0-3662-11EE-8202-035A8D429FDD
OnlineNotary.net



**Microchip Ex. 1061, p. 28**
**Microchip v. Aptiv**
**IPR2024-00229**

# 1. Features

- Conforms to USB 12Mbps Specification, Version 1.1
- Patented architecture
- Single chip solution for host-to-host communication
- Network driver (NDIS standard) support running on Windows 98 and Windows 2000
- Support TCP/IP, NetBEUI, IPX/SPX protocols
- Up to 8.6Mbps transfer rate
- Suitable for mobile and SOHO environment
- Tiniest solution in the market – 16-pin SOP
- On-chip 3.3V output
- 12MHz external clock
- Internal power-on reset
- Power management support



Document Id: 3E771AA0-3662-11EE-8202-035A8D429FDD
OnlineNotary.net



Microchip Ex. 1061, p. 29
Microchip v. Aptiv
IPR2024-00229

# 2. Functional Overview

The GL620USB-A provides a single-chip solution for networking two or more PCs via their USB ports. According to USB protocol, the PC is the host and the device is a slave, where the host initiates all the USB traffic and the slave responds to the host's requests. In other words, a host cannot talk to another host via USB protocol; instead, a host can only talk to one or more devices. The GL620USB-A's patent-pending architecture overcomes the USB inherently incompatibility of connecting two or more PCs by providing two independent USB transceivers and SIEs for each host, i.e., data can be transferred in both directions simultaneously.

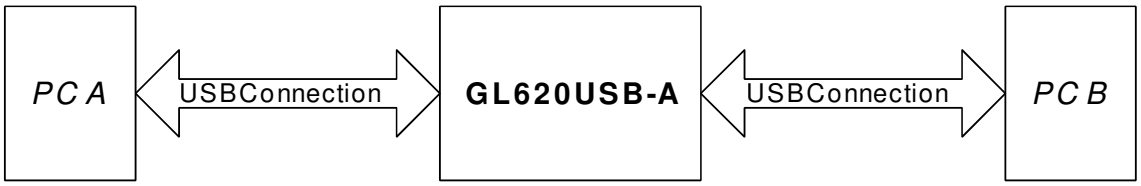


System Diagram



Document Id: 3E771AA0-3662-11EE-8202-035A8D429FDD
OnlineNotary.net



Microchip Ex. 1061, p. 30
Microchip v. Aptiv
IPR2024-00229

# 3. Applications

The windows network driver software comes with GL620USB-A can connect 2 or more PCs via USB ports easily. Genesys Logic also provides Macintosh driver software for GL620USB-A and supports the direct connection between two Macintosh machines. The plug-and-play nature of USB protocol makes the installation and usage of end products very simple.

Working with a full-featured windows driver, the GL620USB-A can perform the following functions between two or more PCs:

- File transfer
- Ethernet emulation
- Storage device sharing: hard drive, CD-ROM, floppy, …
- Printer sharing
- Internet sharing

Working with a full-featured Macintosh driver, the GL620USB-A can perform the following functions between two Macintosh machines:

- Ethernet emulation
- Storage device sharing: hard drive, CD-ROM, floppy, …
- Printer sharing

Working with GL620USB-A and its Windows/Macintosh drivers, PC can provide Internet sharing to Macintosh. GL620USB-A doesn' t support file transfer/sharing function between PC and Macintosh except that the extra third-party software is installed.

The GL620USB-A networking function can be integrated with the following form factors:

- USB standalone cable
- USB standalone hub
- USB monitor with hub
- PC host



Document Id: 3E771AA0-3662-11EE-8202-035A8D429FDD
OnlineNotary.net
Page 31/41
Microchip Ex. 1061, p. 31
Microchip v. Aptiv
IPR2024-00229

# 4. Functional Description

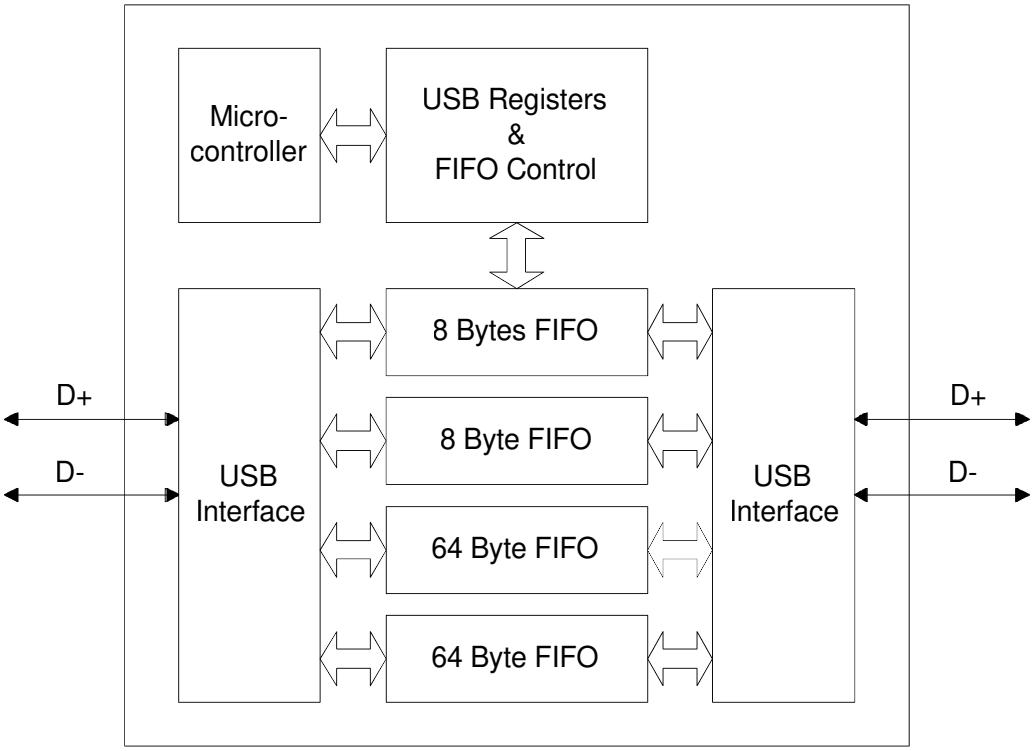


Block diagram of GL620USB-A

The GL620USB-A is equipped with two full-speed USB ports, and each port has four endpoints to provide different functions as follows:

Endpoint 0: control transfer
Endpoint 1: bulk-read transfer
Endpoint 2: bulk-write transfer
Endpoint 3: interrupt transfer

Two 8-bytes FIFO and four 64-bytes FIFO are built in the device as follows:

- Left 8-byte FIFO: provide a pipe to link left endpoint 0 and right endpoint 3. For example, if left host wants to communicate with right host, left host can issue a no data control transfer and the setup command will be



Document Id: 3E771AA0-3662-11EE-8202-035A8D429FDD
OnlineNotary.net



Microchip Ex. 1061, p. 32
Microchip v. Aptiv
IPR2024-00229

stored in the left 8-byte FIFO. Right host can request an interrupt transfer to get the setup command from left host. The status stage of the left side control transfer will not be terminated until the right side get the setup command via interrupt transfer.

- Right 8-byte FIFO: provide a pipe to link right endpoint 0 and left endpoint 3.
- Left 64-bytes DATA0/DATA1 FIFOs: provide a pipe to link left endpoint 2 and right endpoint 1. For example, if left host wants to transfer data to right host, left host can issue bulk write transfer and the payload will be stored in the left 64-byte FIFOs. Right host can request a bulk read transfer to get the data from left host.
- Right 64-bytes DATA0/DATA1 FIFOs: provide a pipe to link right endpoint 2 and left endpoint 1.



Document Id: 3E771AA0-3662-11EE-8202-035A8D429FDD
OnlineNotary.net



Microchip Ex. 1061, p. 33
Microchip v. Aptiv
IPR2024-00229

# 5. Driver Support

The Genesys Logic Ethernet Driver is a mini-port device driver emulating a network interface running on Windows 98 and Windows 2000. The Genesys Logic Ethernet Driver conforms to the NDIS (Network Driver Interface Specification) standard. The users can use standard Windows utilities such as Windows Explorer, Network Neighborhood and standard file sharing security features. Even though there' s no Ethernet card present, the Genesys Logic Ethernet Driver performs all the functions an Ethernet card can do, and more, the plug-and-play feature. The users can build up their own private network by connecting several PCs via the GL620USB-A embedded cables.

The Genesys Logic software router is a network protocol layer driver. The software router can forward packet between the GL620USB-A embedded cable and Ethernet LAN to emulate all PCs on the network build by GL620USB-A is also on the Ethernet LAN. This function can share all resources on Ethernet LAN to GL620USB-A connected PCs.

The Genesys Logic Ethernet Macintosh Driver is a device driver emulating a network interface running on Mac OS 8.5, 8.6 and 9.0. After enable the standard Macintosh file sharing service, the users can share the device resources such as HD, CD-ROM between two Macintosh machines by the Macintosh Network Browser.



Document Id: 3E771AA0-3662-11EE-8202-035A8D429FDD
OnlineNotary.net
Page 34/41
Microchip Ex. 1061, p. 34
Microchip v. Aptiv
IPR2024-00229

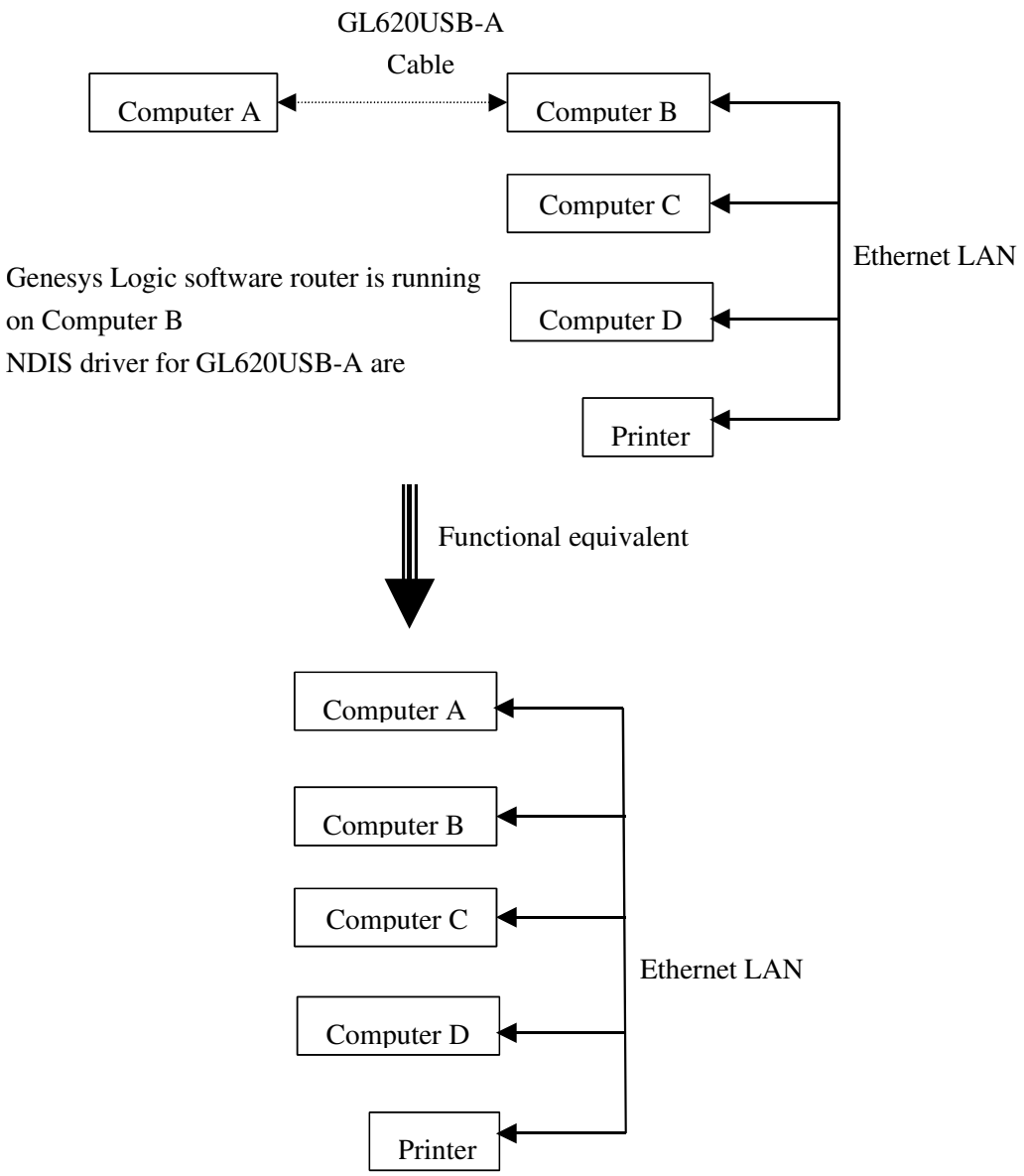




Document Id: 3E771AA0-3662-11EE-8202-035A8D429FDD
OnlineNotary.net



Microchip Ex. 1061, p. 35
Microchip v. Aptiv
IPR2024-00229

# 6. Pin Definitions and Descriptions

| PIN | SYMBOL | I/O | DESCRIPTION |
|---|---|---|---|
| 1 | GPIO1 | B | General purpose IO pin / Driving LED capability |
| 2 | GPIO2 | B | General purpose IO pin / Driving LED capability |
| 3 | LVM | B | Left D- |
| 4 | LVP | B | Left D+ |
| 5 | VCP | O | 3.3V output |
| 6 | RVP | B | Right D+ |
| 7 | RVM | B | Right D- |
| 8 | AGND | - | Ground |
| 9 | DGND | - | Ground |
| 10 | OSCSEL | I | Selection of clock type |
| 11 | EXTRST_ | I | External reset |
| 12 | XTAL1 | I | 12M crystal input |
| 13 | XTAL2 | O | Crystal output |
| 14 | GPIO3 | B | General purpose IO pin |
| 15 | GPIO4 | B | General purpose IO pin |
| 16 | VCC | - | 5V power |

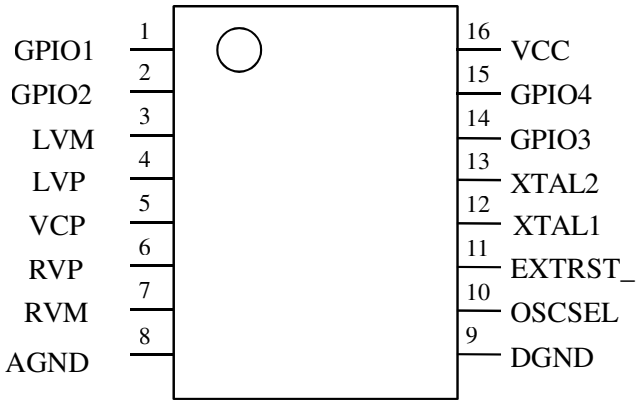


16-pin SOP



Document Id: 3E771AA0-3662-11EE-8202-035A8D429FDD
OnlineNotary.net



Microchip Ex. 1061, p. 36
Microchip v. Aptiv
IPR2024-00229

# 7. Electrical Characteristics

## 7.1 Absolute Maximum Ratings (Voltages referenced to GND)

| SYMBOL | Description | MIN | MAX |
|---|---|---|---|
| VCC | DC supply voltage | -0.5V | +7V |
| $V_I$ | DC input voltage | -0.5V | VCC+0.5V |
| $V_{I/O}$ | DC input voltage range for bidirect pins | -0.5V | VCC+0.5V |
| $V_{AI/O}$ | DC input voltage for USB D+/D- pins(PIN3, 4, 6, 7) | -0.5V | VCC+0.5V |
| $V_{I/OZ}$ | DC voltage applied to outputs in High Z state | -0.5V | VCC+0.5V |
| $V_{ESD}$ | static discharge voltage | 4000V | |

## 7.2 DC Characteristics (VCP/D+/D-)

| SYMBOL | Description | MIN | TYP | MAX | UNIT |
|---|---|---|---|---|---|
| $V_{3.3}$ | VCP regulator output | 3.0 | 3.3 | 3.6 | V |
| $I_{3.3}$ | VCP maximum supply current | 27 | 41 | 56 | mA |
| $V_{OL}$ | D+/D- static output LOW($R_L$ of 1.5K to 3.6V ) | | | 0.3 | V |
| $V_{OH}$ | D+/D- static output HIGH ($R_L$ of 15K to GND ) | 2.8 | | 3.6 | V |
| $V_{DI}$ | Differential input sensitivity | 0.2 | | | V |
| $V_{CM}$ | Differential common mode range | 0.8 | | 2.5 | V |
| $V_{SE}$ | Single-ended receiver threshold | 0.2 | | | V |
| $C_{IN}$ | Transceiver capacitance | | | 20 | pF |
| $I_{LO}$ | Hi-Z state data line leakage | -10 | | +10 | µA |
| $Z_{DRV}$ | Driver output resistance | 28 | | 43 | Ohms |

## 7.3 DC Characteristics (PIN1, 2)

| SYMBOL | Description | MIN | TYP | MAX | UNIT |
|---|---|---|---|---|---|
| $V_{DD}$ | Power Supply Voltage | 4.5 | 5.0 | 5.5 | V |
| $I_{OL}$ | DC output sink current at 0.4V | 13.01 | 19.54 | 24.82 | mA |
| $I_{OH}$ | DC output source current at $V_{DD}$ -0.4V | 6.35 | 9.82 | 12.37 | mA |
| $I_{OHTTL}$ | DC output source current at TTL high | 24.62 | 49.45 | 69.12 | mA |
| $V_{IL}$ | LOW level input voltage | | | 0.7 | V |
| $V_{IH}$ | HIGH level input voltage | 2.66 | | | V |
| $V_{TLH}$ | LOW to HIGH threshold voltage | 2.02 | 2.38 | 2.66 | V |
| $V_{THL}$ | HIGH to LOW threshold voltage | 0.7 | 0.83 | 1.0 | V |
| $V_{HYS}$ | Hysteresis voltage | 1.1 | 1.55 | 1.79 | V |
| $V_{OL}$ | LOW level output voltage when $I_{OL}$=16mA | | | 0.4 | V |



Document Id: 3E771AA0-3662-11EE-8202-035A8D429FDD
OnlineNotary.net



Microchip Ex. 1061, p. 37
Microchip v. Aptiv
IPR2024-00229

## 7.4 DC Characteristics (PIN10, 11)

| SYMBOL | Description | MIN | TYP | MAX | UNIT |
|---|---|---|---|---|---|
| $V_{DD}$ | Power Supply Voltage | 4.5 | 5.0 | 5.5 | V |
| $V_{IL}$ | LOW level input voltage | | | 0.69 | V |
| $V_{IH}$ | HIGH level input voltage | 2.65 | | | V |
| $V_{TLH}$ | LOW to HIGH threshold voltage | 2.01 | 2.37 | 2.65 | V |
| $V_{THL}$ | HIGH to LOW threshold voltage | 0.69 | 0.82 | 0.99 | V |
| $V_{HYS}$ | Hysteresis voltage | 1.1 | 1.55 | 1.79 | V |
| $R_{UP}$ | Pad internal pullup resister | 191.27 | 240.69 | 376.34 | Kohms |

## 7.5 DC Characteristics (PIN14, 15)

| SYMBOL | Description | MIN | TYP | MAX | UNIT |
|---|---|---|---|---|---|
| $V_{DD}$ | Power Supply Voltage | 4.5 | 5.0 | 5.5 | V |
| $I_{OL}$ | DC output sink current at 0.4V | 3.89 | 5.94 | 7.56 | mA |
| $I_{OH}$ | DC output source current at $V_{DD}$ -0.4V | 2.85 | 4.36 | 5.46 | mA |
| $I_{OHTTL}$ | DC output source current at TTL high | 10.9 | 21.5 | 29.75 | mA |
| $V_{IL}$ | LOW level input voltage | | | 0.71 | V |
| $V_{IH}$ | HIGH level input voltage | 2.68 | | | V |
| $V_{TLH}$ | LOW to HIGH threshold voltage | 2.03 | 2.39 | 2.68 | V |
| $V_{THL}$ | HIGH to LOW threshold voltage | 0.71 | 0.83 | 1.0 | V |
| $V_{HYS}$ | Hysteresis voltage | 1.1 | 1.55 | 1.8 | V |
| $V_{OL}$ | LOW level output voltage when $I_{OL}$=4mA | | | 0.4 | V |
| $R_{DN}$ | Pad internal pulldown resister | 122.08 | 160 | 267.31 | Kohms |

## 7.6 Switching Characteristics

| SYMBOL | Description | MIN | TYP | MAX | UNIT |
|---|---|---|---|---|---|
| $F_{X1}$ | X1 crystal frequency | 11.97 | 12 | 12.03 | MHz |
| $T_{CYC}$ | X1 cycle time | | 83.3 | | ns |
| $T_{X1L}$ | X1 clock LOW time | $0.45T_{cyc}$ | | | ns |
| $T_{X1H}$ | X1 clock HIGH time | $0.45T_{cyc}$ | | | ns |
| $T_{r30pf}$ | Output pad rise time from 10% to 90% swing with 30pF loading | 6 | 8 | 12 | ns |
| $T_{f30pf}$ | Output pad fall time from 10% to 90% swing with 30pF loading | 5.3 | 7 | 10.4 | ns |
| $T_{r50pf}$ | Output pad rise time from 10% to 90% swing with50pF loading | 9.5 | 13 | 19 | ns |
| $T_{f50pf}$ | Output pad fall time from 10% to 90% swing with 50pF loading | 7.7 | 10 | 16 | ns |
| $T_{rUSB}$ | D+/D- rise time with 50pF loading | 4 | | 20 | ns |
| $T_{fUSB}$ | D+/D- fall time with 50pF loading | 4 | | 20 | ns |



Document Id: 3E771AA0-3662-11EE-8202-035A8D429FDD
OnlineNotary.net



Microchip Ex. 1061, p. 38
Microchip v. Aptiv
IPR2024-00229

# 8. Package Diagram

| Symbol | Dimension in mils | | | Dimension in mm | | |
|---|---|---|---|---|---|---|
| | Min | Nom | Max | Min | Nom | Max |
| A | --- | 58 | --- | --- | 1.473 | --- |
| A1 | 6 | --- | --- | 0.152 | --- | --- |
| A2 | --- | 24 | --- | --- | 0.610 | --- |
| B | --- | 16 | --- | --- | 0.406 | --- |
| C | --- | 8 | --- | --- | 0.203 | --- |
| D | 388 | 390 | 392 | 9.855 | 9.906 | 9.957 |
| E1 | 152 | 154 | 156 | 3.861 | 3.912 | 3.962 |
| e | --- | 50 | --- | --- | 1.270 | --- |
| eB | --- | 238 | --- | --- | 6.045 | --- |
| L | 25 | --- | --- | 0.635 | --- | --- |
| θ | 0° | 3° | 6° | 0° | 3° | 6° |

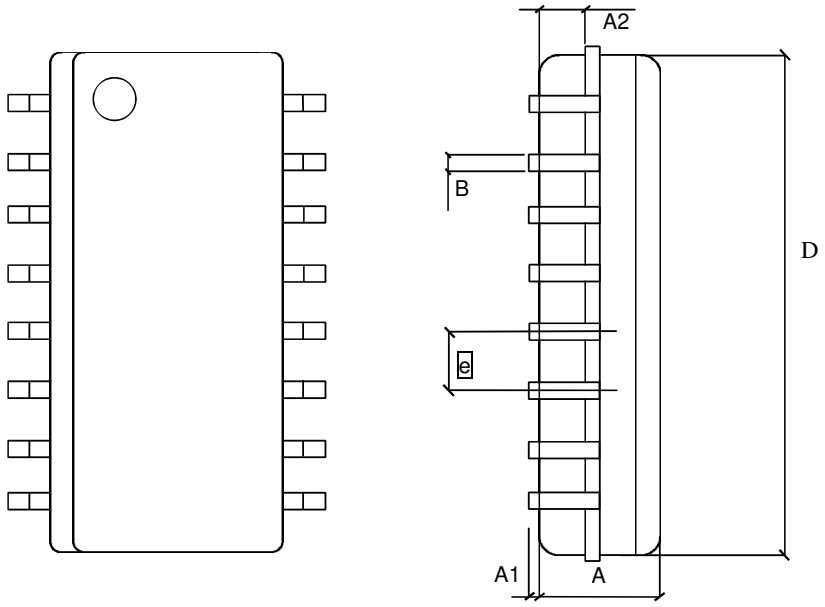


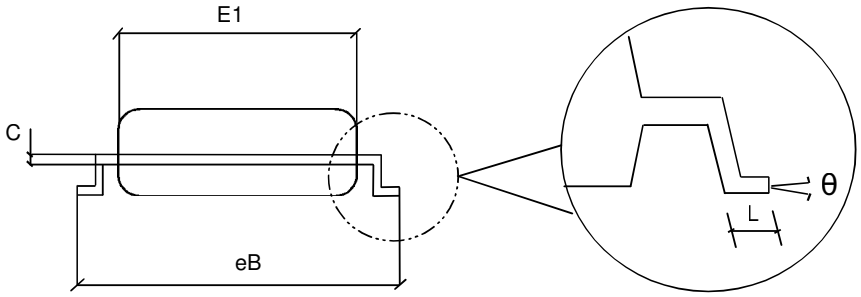




Document Id: 3E771AA0-3662-11EE-8202-035A8D429FDD
OnlineNotary.net



Microchip Ex. 1061, p. 39
Microchip v. Aptiv
IPR2024-00229

# 9. Application Circuit

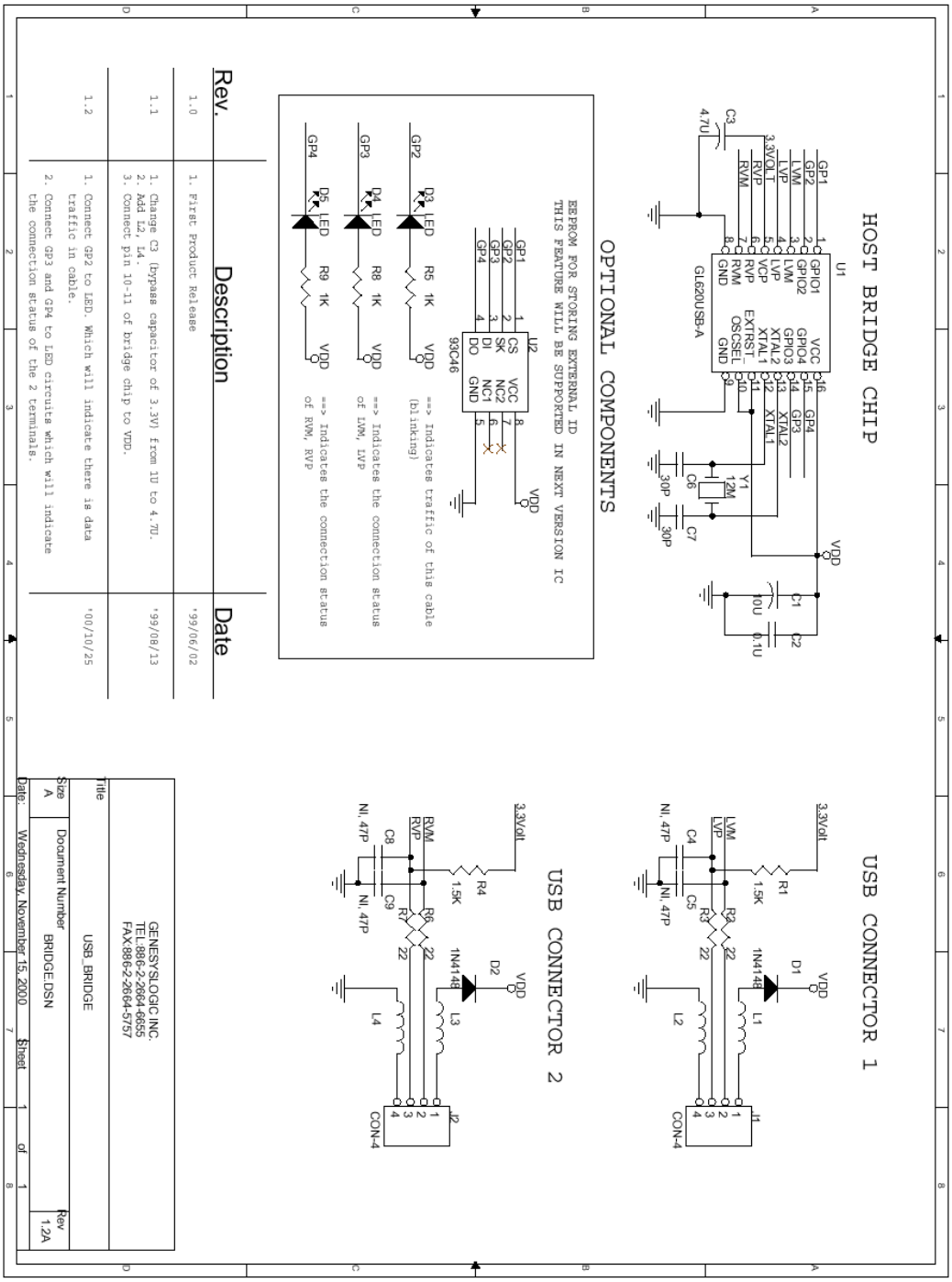




Document Id: 3E771AA0-3662-11EE-8202-035A8D429FDD
OnlineNotary.net



Microchip Ex. 1061, p. 40
Microchip v. Aptiv
IPR2024-00229

# JURAT ATTACHMENT

A notary public or other officer completing this certificate verifies only the identity of the individual who signed the document to which this certificate is attached, and not the truthfulness, accuracy, or validity of that document.

STATE OF Texas }

COUNTY OF Tarrant }

The foregoing instrument was subscribed and sworn before me this date of 08/09/2023, by Nathaniel Frank-White

This notarial act was an online notarization.

BRITTANY RENE COPELAND
ELECTRONIC NOTARY PUBLIC
STATE OF TEXAS
NOTARY ID: 133645929
COMISSION EXP: MARCH 15 2026

(Notary Seal)

Notary's Signature

Registration No.: 133645929

Commission Expiration Date: March 15, 2026



Microchip Ex. 1061, p. 41
Microchip v. Aptiv
IPR2024-00229