IN THE UNITED STATES DISTRICT COURT
FOR THE DISTRICT OF DELAWARE

APTIV TECHNOLOGIES AG, Plaintiff, v. MICROCHIP TECHNOLOGY INC., Defendant.	C.A. No. 23-307-JDW **JURY TRIAL DEMANDED**

ROBERT DEZMELYK DECLARATION
IN SUPPORT OF MICROCHIP'S RESPONSIVE CLAIM CONSTRUCTION BRIEF

I, Robert Dezmelyk, do hereby declare as follows:

I. Introduction

1. I have been asked to provide my opinions regarding certain claim constructions, and the definiteness of some claims from U.S. Patents 9,460,037 (the '037 Patent), 9,619,420 (the '420 Patent), 10,545,899 (the '899 Patent), 11,176,072 (the '072 Patent), and 11,681,643 (the '643 Patent). I may refer to the patents collectively as "the Asserted Patents."

2. I am being compensated at my usual hourly rate for my work in this case. My compensation is not based upon the outcome of the case or the Court's determinations related to claim construction.

II. Background and Qualifications

3. I was President of LCS/Telegraphics, a consulting and technology supply company from 1980 until my retirement in June of 2021. I presently develop products and consult in technological fields where I have expertise. I have been working with input devices, microcomputers, and interactive computer systems since 1976.

Aptiv Exhibit 2016 Page 1
Microchip v. Aptiv IPR2024-00229

4. In 1979, I received my degree from the Massachusetts Institute of Technology ("MIT"). I studied in a specialized program sponsored by the Mechanical Engineering Department on the application of computers to measurement and control that combined Electrical Engineering and Computer Science courses with courses and research in control systems, signal processing, and instrumentation. My course work also included traditional mechanical engineering topics. During the course of my work on instrumentation in the Fluid Mechanics Laboratory, and my thesis research I designed, built, and used several serial and parallel bus interface implementations including an IEEE-488 bus controller and a serial tape drive interface for a Motorola 6800 based microcomputer.

5. In addition, while I was a student, I worked at 2005 AD, Inc. doing research and product development on several early microcomputer systems in an attempt to create a memory mapped coaxial cable-based link between an IMSAI S-100 computer and a Sphere 1 personal computer. As an independent product developer, I also designed and built a number of microprocessor-controlled devices and systems based on the 6502 microprocessor.

6. After graduation from MIT, I formed a business to expand my product development and engineering work, and in 1980 I incorporated it as Laboratory Computer Systems, Inc. (LCS). Initially, LCS primarily offered computer systems and design consulting. Projects I personally completed included a control and data acquisition system for pulsed dye lasers used in research, a dynamic RAM board for IBM, and a number of microcomputer systems for data acquisition and analysis. The dye laser controller required specially designed optical isolators and signaling techniques to operate in an extreme EMI noise environment. Several of those systems used digitizing tablets, input devices which sense the location of a stylus held by a user to input X,Y coordinate data from images. LCS launched several products which were used to analyze images.

The first was a microcomputer-based image analysis system called the Image-80 which incorporated a digitizing tablet, the second was a smaller analyzer built into a digitizing tablet, the Microplan II. The Microplan II was marketed under a private label agreement with Nikon, Inc. and sold by Nikon for a number of years as a part of its scientific instrument product line.

7. At LCS in the early 1980s I continued to undertake research and product development projects. One of those projects was a video arcade game where the entire system, including its Z-80 CPU, a graphics controller, and all memory and I/O interfaces were located on a single printed circuit board. Other projects included systems which utilized multiple modular S-100 cards to control sets of video displays, and a Z-80 based RS-232 serial to optical control link device.

8. In 1984, I developed a concept for an interactive communications program for the newly introduced IBM Personal Computers that allowed users to browse remote time-sharing systems with a graphical interface, similar in appearance in many ways to a modern web browser, and to share typed and drawn communications, in real time, with remote sites using modems and the telephone network. This product was named TeleVision. We also introduced one of the first PC compatible paint programs named TelePaint. Both TelePaint and TeleVision used a fully mouse driven icon and window-based user interface and were some of the earliest PC applications that required a mouse. I designed a major portion of the user interface and led the team of engineers who implemented the products.

9. As a result of our development and marketing efforts for TelePaint, we established relationships with a number of the early manufacturers of mice including Microsoft, Logitech, Mouse Systems, and Torrington, and began to direct our attention to the interface between the input devices and the computers, including both the hardware and software aspects of the interface.

LCS developed the first widely accepted emulation of the functionality of Microsoft's mouse driver, and our licensees distributed millions of copies of the drivers with mice, trackballs, digitizing tablets, touch screens, touch pads, and computers. Many of our customers also relied on our engineering team for assistance with designs related to the interfaces of their input devices to personal computers. Typically, these interfaces used some kind of serial connection.

10. Subsequently at LCS we introduced input device drivers for every version of Windows beginning with Windows 3.0 and extending up through Windows XP, as well as a number of more specialized operating systems such as OS/2 and the various pen computer operating environments, and we provided engineering services and consulting related to the devices themselves and the interfaces used by the devices. During the 1990s LCS developed and provided drivers for touchpads used on notebook computers and provided engineering services related to the integration of the touchpads into newly designed notebook computers. At one point every major vendor of notebook computers in the US who offered a product with a touchpad was shipping LCS' drivers with their notebook computers.

11. LCS also developed a standardized software interface for digitizing tablets, and I founded an industry committee to standardize the software interface between applications software programs and digitizing tablets and other advanced pointing devices. The Wintab standard applications programming interface we developed became the accepted standard for applications such as AutoCAD and Photoshop. It is still used today in some applications.

12. In the early 1990s, in response to the need for better interfaces between input devices and other similar peripherals and the proven benefits of industry standards we saw as a result of the Wintab project, I began to focus on new interface approaches for small serially

interfaced peripherals. Access.bus was one proposed solution, with support from Philips, Digital Equipment Corp. and others.

13. In 1993 I was elected as the Chairman of the Access.bus Software Working Group, and I led its early software standardization effort as well as working on testing the physical layer, and its overall specification. At one of the Access.bus meetings, a number of participants, including myself, decided that it would be better to continue our efforts to implement a new peripheral device standard in coordination with a project launched by Intel. That project became Universal Serial Bus ("USB").

14. I participated in the development of the Universal Serial Bus Version 1.0 Specification and was one of the people who voted for the adoption of the USB 1.0 specification. From 1996 to 1998 I served as the Chairman for the Universal Serial Bus Human Interface Device Working Group, and I was a member of the USB Device Working Group board which guided development of device class related parts of the standard.

15. As the USB product development began, I directed my design efforts towards USB based products and interfaces. LCS assisted its customers in adding USB interfaces to their products and sold hundreds of thousands of USB interface ICs to our customers. I have personally designed many USB interfaces for a wide variety of products, and I have provided consulting regarding USB signal integrity issues, performance of USB interfaces and host controllers, USB signaling over long distances, USB isochronous behavior, USB related EMI emissions, and USB related power issues.

16. For the last 16 years I have provided design consulting and product development for a line of radio frequency test equipment which has grown to include synthesizers, attenuators, phase shifters, and switches for use with signals up to 40 GHz. I designed and developed the USB

interface portion of the devices, as well as portions of the Ethernet interface for the devices that include an Ethernet interface. In order to better support the test equipment products, I worked on a USB hub product that has a set of features useful in test labs and other specialized applications.

17. I have also provided expert services including investigating technologies involved in peripheral interfaces, USB interfaces and connectors, Bluetooth networks, input devices, game controllers, graphical user interfaces, and automotive controls.

18. I am currently a member of IEEE and ACM, and I serve on the U.S. Election Assistance Commission Standards Board, which provides advice to the Election Assistance Commission regarding guidelines related to voting machine and system technology.

19. I have been qualified as an expert regarding input devices, USB technology, capacitive touch screen technology, KVM technology, automotive components and other related technologies. A listing of cases where I have provided testimony at trial, by deposition, or by declaration is included in my CV which is attached as Appendix A**.**

III. Legal Standards

A. Claim Construction

20. I understand that claim construction is a matter of law to be decided by the Court, but the Court may use input from expert testimony to assist in its determination of the meaning of claim terms.

21. I understand that terms in patent claims are given their ordinary and customary meaning as they would be understood by a person having ordinary skill in the art at the time of the invention ("POSITA"). In determining the ordinary and customary meaning, I understand one should look to those sources available that show what one of skill in the art would have understood disputed claim language to mean. I understand that the words of the patent's claims and the context in which the term is used in the patent's claims can be highly instructive in

ascertaining the term's meaning. I further understand that the terms of a claim are interpreted in the context of the entire patent, including the patent's claims, its specification, its figures, and the prosecution history, also referred to as "intrinsic evidence."

22. I understand that "extrinsic evidence," evidence external to the patent and the prosecution history, includes evidence concerning the relevant scientific principles, the meaning of technical terms, and the state of the art. I understand that such evidence may also be useful in interpreting patent claims when the intrinsic evidence itself is insufficient. I understand that, when patents and their claims refer to or utilize terminology from industry standards, the disclosures of the industry standards may also be useful in interpreting patent claims.

23. I understand that words or terms should be given their ordinary and customary meaning to a POSITA unless it appears that the inventors were using them to mean something else. In making this determination, the claims, the patent specification, and the prosecution history are of paramount importance. Additionally, the specification and prosecution history may be consulted to confirm whether the patentee has acted as their own lexicographer (*i.e.*, provided their own special meaning to any disputed terms), or intentionally disclaimed, disavowed, or surrendered any claim scope.

24. I understand that in general, a term or phrase found in the introductory words of the claim—the preamble of the claim—is limiting if it recites additional structure or steps, or is necessary to give life, meaning, and vitality to the claim. Conversely, a preamble term or phrase is not limiting where a patentee defines a structurally complete invention in the claim body and uses the preamble only to state a purpose or intended use for the invention. In making this distinction, one should review the entire patent to gain an understanding of what the inventors claim they actually invented and intended to encompass by the claims.

B. Indefiniteness

25. I understand that a patent claim must particularly point out and distinctly claim the subject matter which the applicant regards as his invention. I understand that a patent claim is invalid if, read in light of the specification and the prosecution history, the claim fails to inform, with reasonable certainty, those skilled in the art about the scope of the invention. I understand that a patent claim must be precise enough to afford clear notice of what is claimed, thereby apprising the public of what is still open to them, while recognizing that absolute precision is unobtainable.

26. I understand that the indefiniteness inquiry focuses on the understanding of a skilled artisan at the time of the patent application. To understand the meaning of a claim term as it would be viewed by a POSITA, I understand that courts may look to extrinsic evidence, such as expert testimony, dictionaries, and learned treatises. I also understand that the claims, when read in light of the specification and the prosecution history, must provide objective boundaries for those of skill in the art.

C. Correcting a Claim

27. I understand that the patentee may seek to "correct" a claim during litigation. It is my understanding that the Court will only correct an "obvious error," meaning one that is evident from the face of the patent. If an error is not evident from the face of the patent, it cannot be corrected. Even "obvious" errors can only be corrected by district courts at claim construction when: (1) the correction is not subject to reasonable debate based on consideration of the claim

language and the specification—from the perspective of one of ordinary skill in the art—and (2) the prosecution history does not suggest a different interpretation of the claims.

D. Means Plus Function Claims

28. I understand that claim terms may be drafted in means-plus-function format where they recite a means for performing a function, and the corresponding structure for performing that function is clearly identified in the specification.

29. I understand that, if a claim term uses the word "means" (e.g., "means for transmitting" or "transmitting means"), it is presumed that it is a means-plus-function term. If, on the other hand, a claim term does not use the word "means," it is presumed that it is not a means-plus-function term. However, this presumption may be overcome, and even a claim term that does not use the word "means" will be treated as a means-plus-function term where it recites a function without reciting sufficient structure for performing that function. For example, if the term uses functional language and/or a nonce word that would have the same effect as though the word "means" was used instead, and does not provide sufficient structure, the presumption against means-plus-function will be overcome. In determining whether a claim term recites sufficiently definite structure, the Court may consider whether that term is used in common parlance by POSITAs to designate a particular structure or class of structures and/or its claimed interaction with other components.

30. If a claim term is a means-plus-function term, the specification must supply the corresponding structure that the claim lacks. If there is no corresponding structure in the specification, the term is indefinite.

IV. Level of Ordinary Skill in the Art

31. I have been asked to consider the abilities and education of a person of ordinary skill in the art as of the priority dates that apply to each of the Asserted Patents. The '037 Patent,

the ’420 Patent, the ’899 Patent, the ’072 Patent, and the ’643 Patent claim priority to a provisional application filed on September 26, 2013.

32. I have considered the type of problems encountered by practitioners, the nature of prior art solutions, the rapidity of innovations in the area of USB technology to which the Asserted Patents are directed, how sophisticated that area of USB technology is, and the educational background of people working in that area of technology, including other engineers and designers I have worked with or hired.

33. In my opinion, a POSITA would have a bachelor’s degree in electrical engineering, computer science, or an equivalent technical degree and substantial experience (e.g., several years) designing USB systems, including USB hosts, USB hubs, and USB devices. Additional education related to the hardware, architecture, and circuit design aspects of serial interfaces such as USB could be substituted for professional experience, and vice versa. A POSITA also would have been familiar with USB standards (including USB 2.0 and 3.0 Specifications and the OTG Supplement).

34. While my experience level exceeds that of a POSITA, I am familiar with POSITAs from the time frame of the priority dates of the Asserted Patents and my opinions regarding what a POSITA would understand are based on a POSITA’s perspective at those times.

V. Technology Background

A. Universal Serial Bus (USB)

35. USB is a serial interface bus[1] originally designed in the 1990s to connect personal computers and their peripherals. USB enabled the use of many different types of peripherals with

[1] A “bus” is a component in a computer system that transfers data between different components.

a PC, including input devices like mice and keyboards, devices that transferred audio, and more complex peripherals like printers and external disk drives. USB was also designed to be easy to use, with built-in support for plugging and unplugging of peripheral devices, and a built-in supply of power for devices that did not require large amounts of power to operate.

36. By the priority date of the Asserted Patents, USB was widely used not only as an interface between personal computers and their peripherals, but also as an interface and power source for mobile phones, and an interface for automotive infotainment systems.

37. USB Specification Revision 2.0 was released on April 27, 2000, and it was subsequently updated with additional functionality, such as that in the On-The-Go and Embedded Host Supplement, Revision 2.0 version 1.1a published on July 27, 2012. USB Specification Revision 3.1, which introduced new super-speed connections that like the earlier USB Specification Revision 3.0 operate in parallel to the USB 2.0 bus, was released on July 26, 2013.

38. For simplicity my discussion concentrates on the operation of the USB Specification 2.0 bus, devices, and hubs, since, as an example, a USB 3.0 hub contains both a USB 2.0 hub subsystem and a USB 3.0 hub subsystem operating alongside each other.

39. Data transfers on a USB bus are initiated by the host controller, which is at the top of a tiered star topology bus. “There is only one host in any USB system.” [USB 2.0 pg. 16 pdf pg. 44]. The directions of data transfers and connections are described relative to the host at the top of the hierarchy so “upstream” refers to data flow towards the host, and an upstream port is “the port on a device electrically closest to the host that generates upstream data traffic from the hub.” [USB 2.0 pg. 10 pdf pg. 38]. Similarly, “downstream” refers to data flow “from the host or away from the host”, and “[a] downstream port is the port on a hub electrically farthest from the

host that generates downstream traffic from the hub." [USB 2.0 pg. 5 pdf pg. 33]. Each segment of the bus uses a cable—or sometimes conductors on a printed circuit card or inside of an integrated circuit—to carry signals between a hub's downstream port and a peripheral device on the bus, or another hub. The root hub at the host only has one or more downstream ports. A bus segment that is configured for operation is often referred to as a link.

40. A USB bus segment has transceivers at each end of the segment. The design of USB 2.0 transceivers varies depending on whether they operate in all speed modes, or only in full-speed and/or low-speed mode. The circuitry in the transceiver contains components to transmit or receive signals representing data on the bus at the supported speeds and translate them into logical bit values, and components that can either set or receive other signaling states used by the bus for tasks such as reset signaling, End-of-Packet markers, connect and disconnect detection, and resume from suspend. [USB 2.0 pg.145]. USB segments indicate connection to an upstream port by connecting a pull up resistor to one of the D+/D- lines. For an upstream port which can operate in high speed or full speed mode the pull up resistor is connected to the D+ line. That signal indicates to a downstream hub port that a peripheral device or a hub has been connected. High-speed capable devices or hubs initially connect as full speed devices. [USB 2.0 pg. 142]. Subsequently a high-speed capable downstream port will attempt to exchange a series of chirp signals with the attached device in order to determine if the link can be operated in high speed mode. The diagram below shows the components of a USB 2.0 transceiver that supports all of the USB 2.0 speeds.

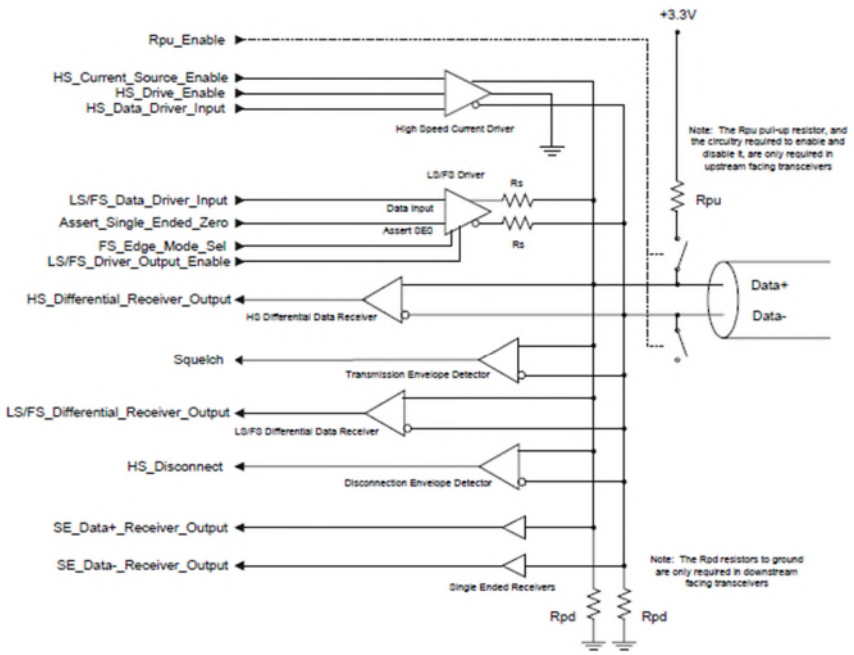

Figure 7-1. Example High-speed Capable Transceiver Circuit

[USB 2.0 Specification Fig. 7-1 pg. 120].

B. USB Hubs[2]

41. USB hubs were well known parts long before 2013, and were used, for example, as the connection point for peripheral devices, and additional hubs (to add additional ports to the bus).

42. USB hubs comprise well known components. For example, the downstream ports of a USB 2.0 hub each have a USB transceiver, and a +5V DC power source which can supply power to connected peripheral devices or hubs. Internally, a USB 2.0 hub has circuitry which selectively provides data path connections from the upstream port to enabled downstream ports through either data repeating and retiming circuitry, or if the device or hub connected to a

[2] POSITAs, and the USB Specifications, often use the term hub to refer to the complete USB device that provides additional ports for expanding the bus, and these background sections do as well. In the Asserted Patents, however, the term hub refers to an integrated circuit that performs the data path related functions of a complete USB hub device, and the term hub module is used to refer to an assembly that includes the hub integrated circuit and additional components such as connectors.

downstream port is not operating at the same speed as the upstream link, through transaction translators which generate bus transactions at the lower speed.

C. USB Bridges

43. USB bridges were also well-known parts long before 2013.

44. Because USB is limited to a single host per USB bus, two USB hosts cannot communicate directly with one another on the same bus. To circumvent this limitation, USB bridges were used to interconnect separate USB buses, each of which contained its own USB host. This facilitated host-to-host communication without violating the requirement that each USB bus must contain only one host.

45. The USB specification disclosed this workaround, explaining that the prohibition on multiple hosts on the same USB bus, "does not prevent using a USB device to provide a bridge between two USB buses." [USB 2.0 pg. 92].

46. USB bridges comprise well known components. A USB bridge has USB device interfaces (internal components within the bridge) on both sides of an internal, non-USB data connection (another internal component within the bridge). The bridge, when connected between the USB hosts, appears as a USB device on each host's USB bus.

47. Early USB bridge devices were primarily used to share files or network connections between a pair of personal computers. For example, the bridge shown below, intended for use with Windows 98 computers, provided "USB Host to host communication" and supported "TCP/IP protocol." [Link-100/200 package].

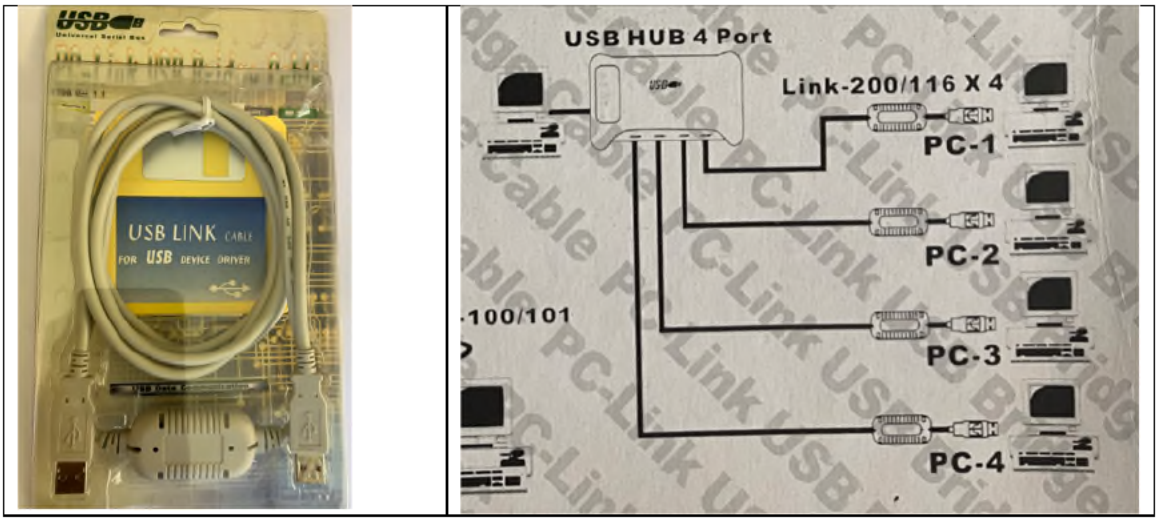

[Link-100/200 package front, portion of back].

VI. Disputed Claim Terms

A. Terms 1 and 2: "connecting the consumer device via the second USB port to the USB hub via the first USB port…" ('420 patent, cl. 13)

No.	Microchip's Proposed Construction	Aptiv's Proposed Construction
1	Plain and ordinary meaning	"connecting the consumer device via the second USB port to the USB ~~hub~~ host via the first USB port through the USB routing switch and the USB bridge"
2	Plain and ordinary meaning	"connecting the consumer device via the second USB port to the USB ~~hub~~ host via the first USB port through the USB routing switch and the USB hub"

48. I disagree with Mr. Andrews that claim 13 contains "an obvious error." Andrews Decl. at ¶ 21. The alleged "error" is not evident from the plain language of the claims and the proposed correction would change the underlying structure of the claimed system. It is my opinion that the claims should be given their plain and ordinary meaning.

49. The claim's preamble recites "a USB hub configured to be interconnected to the first USB port connected to a **USB host**."

50. The following limitations are at issue: (1) "connecting the consumer device via the **second USB port** to the USB hub via the first USB port through the USB routing switch and the

USB bridge" when the consumer device is in host mode, and (2) "connecting the consumer device via the **second USB port** to the USB hub via the first USB port through the USB routing switch and the USB hub" when the consumer device is in device mode. The figure below shows the claimed configuration,[3] using color coding to illustrate how each component matches to the claim language.

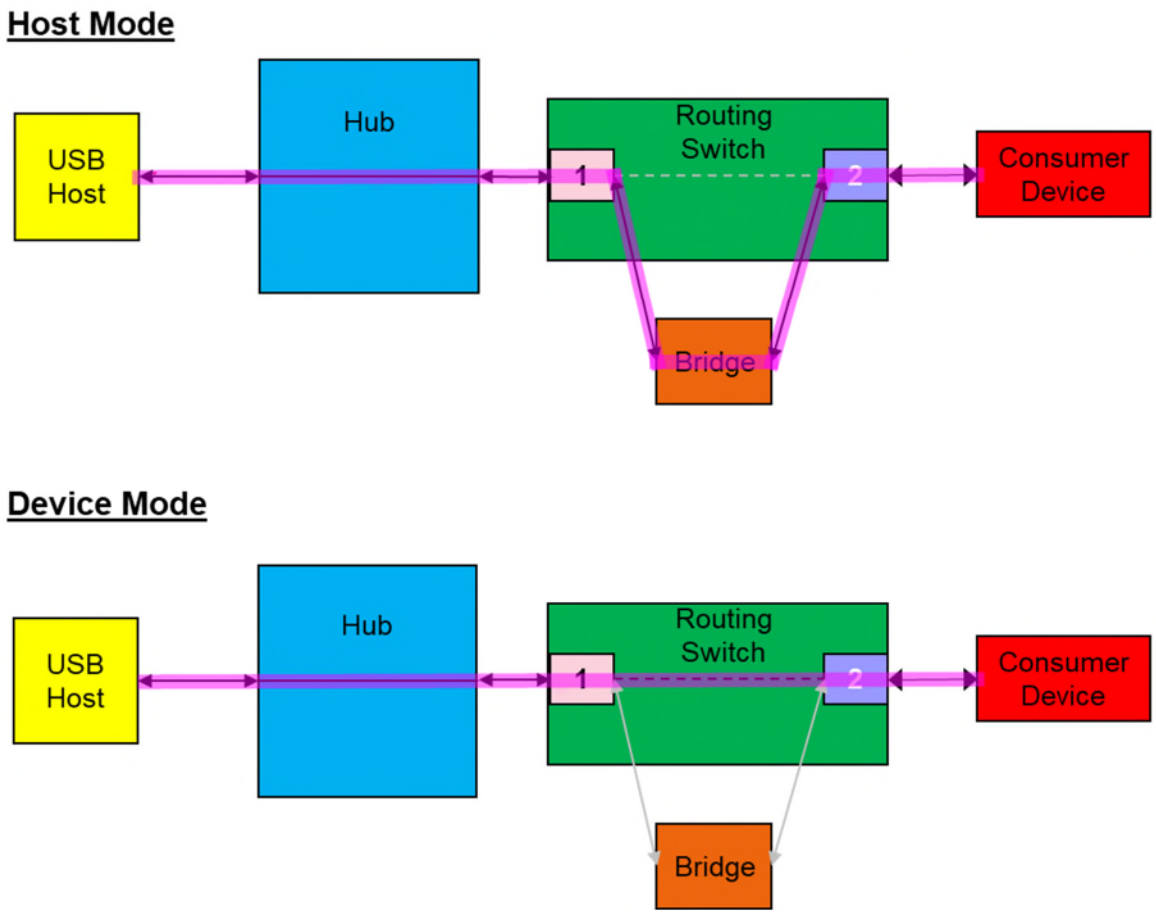

51. A POSITA would understand that this as-written configuration is operable and achieves the claimed purpose of "enabling a vehicle's embedded USB Host system to connect to mobile devices through a USB Hub, regardless of whether the mobile devices are configured to act as USB Hosts or USB Devices." '420 patent, 4:4-7. Namely, when a consumer device is

[3] Only the claimed ports are shown.

configured to act in the host mode, this configuration routes the USB data between the **USB host** and the consumer device through port 2, the routing switch, the bridge, and the USB hub; when the consumer device is configured to act in the device mode, this configuration routes the USB data between the **USB host** and the consumer device through port 2, the routing switch, and the USB hub, bypassing the bridge. Mr. Andrews does not appear to dispute that this is an operable configuration. *See* Andrews Decl. at ¶¶ 21-29.

52. A POSITA would understand that this configuration also offers technical benefits. Typical USB hubs have a plurality of downstream ports. Common hub designs provide 2 or 4 downstream ports, although other configurations are also manufactured. A POSITA would understand that utilizing one port of the available downstream ports for either the bridged or direct path would allow using the other downstream ports on the hub for other purposes.

53. Moreover, this configuration is consistent with the preamble, which requires the "USB hub [is] configured to be interconnected to a first USB port connected to a USB host." In the as-written configuration, communications between the USB Host and the consumer device necessarily run through the first USB port. Accordingly, a POSITA would understand that the first USB port in the as-written configuration is "connected to [the] USB host."

54. I understand that Mr. Andrews argues that claim 13 does not make sense as written because "'the **second USB port**' is already connected to the USB hub and thus would not also connect to the hub 'via [another port *i.e.*,] the first USB port.'" Andrews Decl. at ¶ 23. I disagree because same thing is also true of the embodiment illustrated in Figure 4 and Aptiv's proposed construction: the **second USB port** is connected to the USB hub via another port, *i.e.*, a **third USB port** (described as "Down [n] PHY" port in Figure 4). This is depicted below.

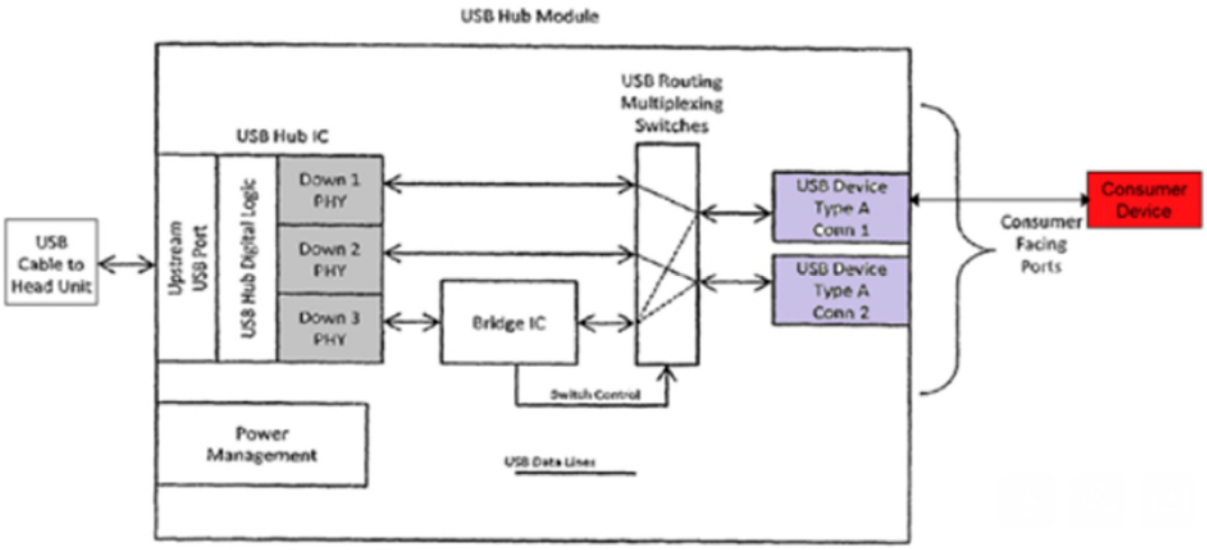

55. In other words, even under Aptiv's construction, the **second USB port** is not connected directly to the USB hub. Instead, some port (either the first USB port (as the plain language of the claim requires) or a third USB port (as Aptiv's re-write requires)) routes signals from the USB bridge and routing switch into the USB hub. I have not seen any explanation from Aptiv as to why the internal ports cannot be the first USB port.

56. I disagree with Mr. Andrews that the surrounding claim language, other claims, or the specification make his proposed correction obvious. Andrews Decl. at ¶¶ 24, 26-28. As an initial matter, Mr. Andrews is incorrect that the claim as written recites an incomplete structure. Although the body of the claim only recites a connection between the consumer device and the USB hub, the preamble states that the USB hub is connected to the USB host. Thus, the claim as a whole recites a complete chain of connections from the consumer device to the USB host.

57. If Mr. Andrews is arguing that the disputed limitation must recite all necessary connections, his proposed construction would violate that same principle, because the USB hub would be missing from the chain. I also note that claim 15 of the '420 patent recites the same combinations of elements as claim 13 but does not recite a hub.

58. Mr. Andrews appears to erroneously assume that the USB host must be connected to the first USB port *directly* when claiming that his proposed correction aligns with the preamble of claim 13. Andrews Decl. at ¶ 25 (After proposed correction, "the 'connecting' limitations would recite connecting the consumer device and host via their ***respective*** ports.") (emphasis added). That assumption is incorrect. For example, claims 1 and 7 recite "connect[ing] the second USB port to the first USB port through the USB bridge." But the first and second USB ports are interconnected through not only the USB bridge, but also the unrecited routing switch. *See* Andrews Decl. at ¶ 34 (annotated Figure 4). Regardless, the "connecting" limitations, as written, are consistent with the preamble, as explained above.

59. I understand that the Court construed "USB device" as "USB hub" in a Microchip patent not at issue in this litigation (US Patent 7,478,191 (the '191 Patent)). I understand that the Court did so because the specification of the '191 Patent repeatedly describes a "USB device" in relation to a "hub," and distinct from a "***peripheral*** USB device." The Court cited portions of the specification that describe the "USB hub" as being part of the "USB device." E.g., '191 Patent, 2:36-43 ("An exemplary system may comprise a USB device [and] a plurality of peripheral devices coupled to the USB device . . . . The USB device may include a USB switching hub . . . ."), 3:4-5 ("As one example, the USB device may be display (monitor) comprising a hub."). The Court also cited portions of the specification that refer to the "USB hub" and "USB device" as the same concept. E.g., '191 Patent, 4:64-5:7 (referring to "USB hub device 106"). In the '420 patent, contrast, the "USB hub" and "USB host" are distinct. Unlike the '191 Patent, the '420 patent does not refer to one as being part of the other or combine the two terms in one concept.

60. Because, as written, claim 13 recites an operable configuration that—consistent with the other claims and the specification—enables communications between a USB host and a consumer device acting in host or device mode, it does not have any clear error.

B. Terms 3 and 4: "a USB hub including a first USB port and a second USB port" / "wherein the USB hub includes a third USB port" ('420 patent, cls. 18, 19)

No.	Microchip's Proposed Construction	Aptiv's Proposed Construction
3	Plain and ordinary meaning	"a USB hub ~~including~~ interconnected to a first USB port and a second USB port"
4	Plain and ordinary meaning	"wherein the USB hub ~~includes~~ is interconnected to a third USB port"

61. In my opinion, there is nothing obviously incorrect about claims 18 or 19. It is my opinion that the claims should be given their plain and ordinary meaning.

62. I note that Mr. Andrews does not appear to separately address claim 19, so I focus on claim 18 here, but claim 19 should not be corrected for the same reasons. Should Aptiv or Mr. Andrews address claim 19 in reply, I reserve the right to respond.

63. Claim 18 recites a system comprising: (1) a **USB hub** including a **first USB port** and a **second USB port**; (2) a **central vehicle microcontroller** connected to said **first USB port**; (3) a first **consumer device** connected to said **second USB port**; (4) a **USB host-to-host bridge** connected to said **first USB port**; (5) a **USB routing switch** providing a first communication path between said **second USB port** and said **USB host-to-host bridge** and a second communication path between said **second USB port** and **said first USB port** that bypasses said **USB host-to-host bridge**. I have depicted this configuration below.

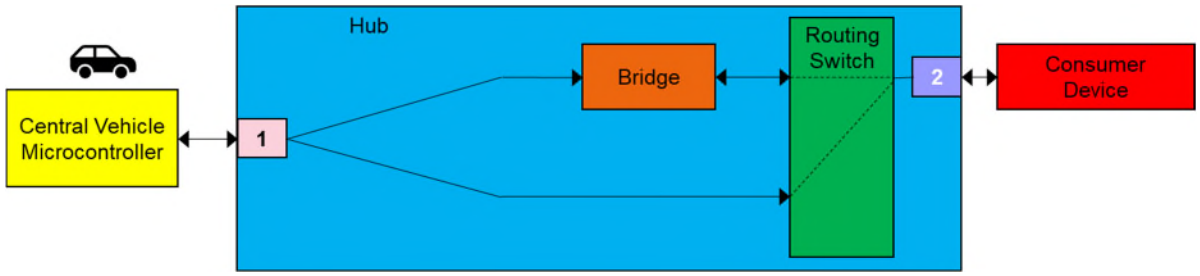

64. I understand this configuration to be operable. Specifically, the bridge and routing switch are integrated inside a USB hub. A POSITA would understand that additional functionality could be integrated into a USB hub integrated circuit, in the same way that transaction translators and reclocking circuitry were added to hub designs when USB 2.0 was introduced.

65. Mr. Andrews emphasized that all the independent claims of the ’420 patent provide two alternate connection paths: one through the bridge and the other bypassing the bridge. Andrews Decl. at ¶¶ 30-31, 33-34. Claim 18, as written, recites the same two alternate connection paths. It thus would not have been obvious to a POSITA that claim 18 is erroneous.

66. Aptiv’s proposed construction would fundamentally change the structure because the first port would no longer be part of the hub and would instead simply be interconnected to it.

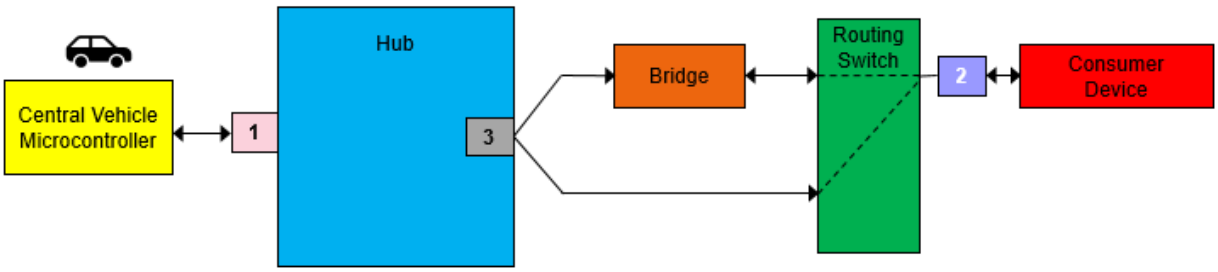

67. Even if claim 18 was clearly erroneous as drafted (which I do not think it is, as explained above), it is my opinion that there are multiple possible corrections. For example, instead of replacing “including” with “interconnected to” as Aptiv proposes, this term could also be corrected by adding the word “module” after hub like this: “a USB hub <u>module</u> including a first

USB port and a second USB port." This alternative correction would cover the preferred embodiment and would have a claim scope different from Aptiv's proposal because it recites a USB hub ***module*** instead of a hub. This is depicted below:

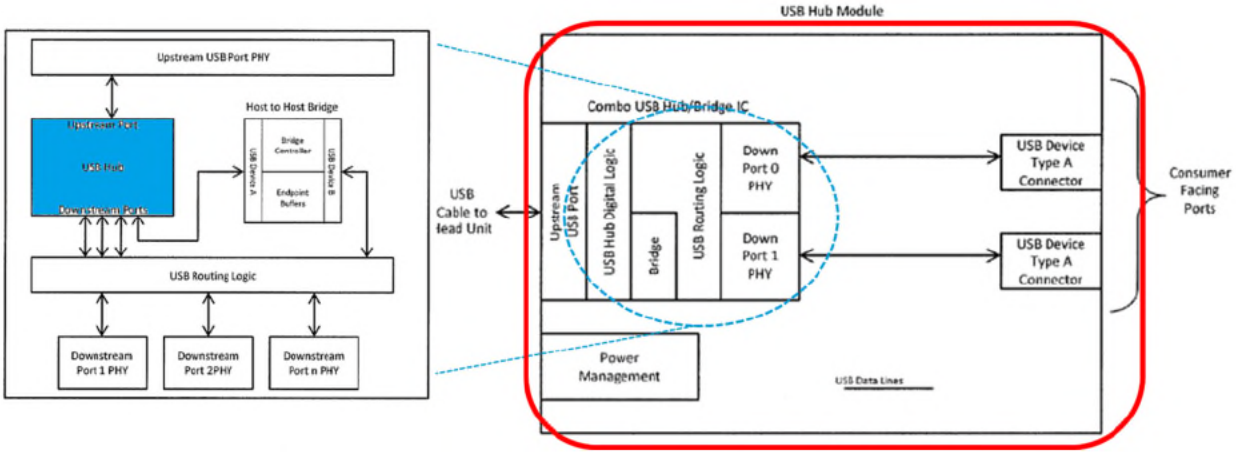

68. In my opinion, this correction is at least as plausible and supported by the specification as Aptiv's proposed correction. It is therefore my opinion that, to the extent the alleged error is evident from the claims, a POSITA would not have known which correction should be made.

C. Term 5: "a USB Hub having a plurality of USB Ports…" / "providing a USB hub having a plurality of USB ports…" ('037 patent, cl. 1 and '899 patent, cl. 1)

No.	Microchip's Proposed Construction	Aptiv's Proposed Construction
5	Indefinite	Not indefinite

69. In my opinion, this term in the '037 and '899 patent is nonsensical, and therefore a POSITA would not have been able to determine its meaning with reasonable certainty. Accordingly, it is indefinite. The claims require that the USB hub ***has*** ("USB hub having") a plurality of USB ports (indicating that the ports are part of the hub), but later recites that the USB hub is ***connected to*** those same ports (indicating that the ports are not part of the hub). That does not make sense. This language is reproduced below:

> [1] "a USB hub ***having*** a plurality of USB Ports";
> [2] "a USB routing switch interconnected to the USB bridge, the USB hub, and the plurality of USB ports wherein the USB routing switch is configured to ***connect*** a first USB port of the plurality of USB ports to the USB Hub through the USB bridge" when a consumer device is in host mode.

This language is from the '899 patent, but it is substantially similar in the '037 patent and Mr. Andrews does not argue that they should be treated differently.

70. In my opinion, a POSITA would have understood that, because the first limitation reproduced above recites "a USB hub having a plurality of USB Ports," the "plurality of USB ports" must be part of the hub and thus refers to the internal downstream[4] ports (labeled "Down PHY" and colored gray in Figure 4 of the patents below).

Figure 4

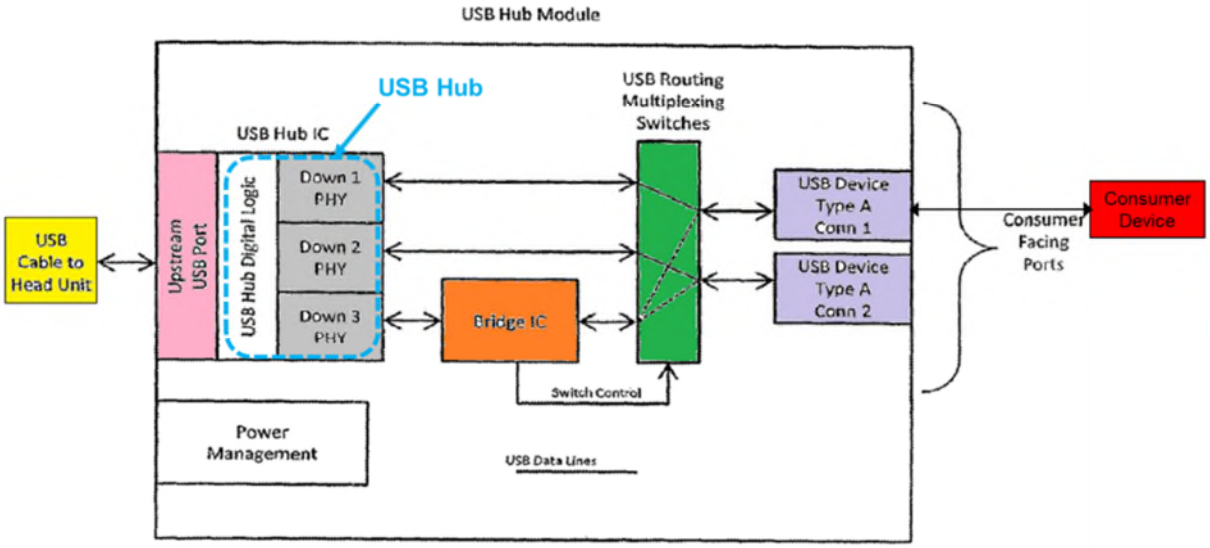

71. But the second limitation reproduced above requires the opposite. Namely, because the "USB routing switch is configured to connect a first USB Port of the plurality of USB Ports to

[4] The claims require that "USB hub configured to simultaneously broadcast data from the USB host to each USB port in the plurality of USB ports." The "Upstream USB Port" therefore is not part of the "plurality of USB ports" because a USB hub cannot broadcast data from an upstream USB port back to that same upstream port.

the USB Hub," this language requires that USB ports are not a part of the hub. Instead, the limitation recites that the USB hub is connected to the USB ports through the bridge when the device is in host mode. Accordingly, a POSITA would understand that, for the ports to be connected to the hub through another component (the bridge), the hub cannot "have" those ports (the ports are not part of the hub). This is also consistent with common sense.

72. I have also reviewed the use of "having" or "have" in the specification, and it is consistently used to describe a component that is part of another. *See, e.g.*, '037 patent, 3:4-5 ("automotive systems ***have*** a USB Host"), 4:33-34 (one embodiment "comprises a USB Hub Module ***having*** a USB Hub, USB Bridge, and USB routing switches"), 5:51-53 (one embodiment "is in the form of a self-powered USB Hub Module ***having*** a USB, a USB Bridge, and a switching device").

73. Moreover, comparison to the specification's use of the similar term, "includes," confirms that Mr. Andrews' interpretation is incorrect. Namely, in the context of Figure 4, the specification explains that "[t]he USB Hub . . . ***includes*** a plurality of downstream USB ports." '037 patent, at 5:58-60. Figure 4, in turn, depicts a "USB Hub IC" physically incorporating multiple ports (Down 1 PHY, Down 2 PHY, and Down 3 PHY), confirming that "includes" refers to components that are a part of the hub. And Aptiv appears to agree that "includes" does not mean "interconnected to," given that they characterize the use of the term "including" instead of "interconnected to" in terms 3 and 4 as an "error." In my opinion, a POSITA would understand the term "having" the same way.

74. Interpreting "having" as requiring the ports to be part of the hub is also consistent with the art and the dictionaries I have seen, e.g., Ex. 1 at 840 (Merriam-Webster's Collegiate

Dictionary) ("have" defined as "hold, include, or contain as a part or whole"); Ex. 2 at 1039 (Webster's Third New International Dictionary) ("have" defined as "contain, include").

75. I disagree with Mr. Andrews that "having" means "possessing" here. Andrews Decl. at ¶ 36. The dictionary definition Mr. Andrews cites in support of this position invokes an abstract principle of ownership, which is not relevant here. Examples given under that dictionary definition include, "they have a new car" and "I have my rights." Ex. C to Aptiv Brief (examples to definition 1a). That same dictionary, however, also includes a definition that, in my opinion, is much more relevant: "to hold, include, or contain as a part." *Id.* (definition 1c). An example given under that definition is "the car has power brakes," which parallels the claim language here—"a USB hub ha[s] a plurality of USB Ports." *Id.* Thus, this definition—"include, or contain as a part"—comports with how I believe a POSITA would have understood "having" in these claims.

76. In my opinion, therefore, given these two conflicting claim elements, a POSITA would not have been able to understand the scope of the claim. The "plurality of USB ports" cannot be both part of the USB hub ("Down PHY" above) and also "connected to" the USB hub.

77. This is further supported by the file history. During prosecution, Aptiv distinguish the prior art by arguing that "it is not logical that [Component A] and [Component B] can be ***components of*** the USB switching hub 119 that are contained within USB switching hub 119 and at the very same time be ***interconnected to*** the same USB switching hub 119." (D.I. 116-1, Ex. 11 at 5 (emphasis added).) By the same logic, that the "plurality of USB ports" cannot be both components of the USB hub and connected to the USB hub.

78. I also disagree with Mr. Andrews that the USB 2.0 Specification somehow supports his interpretation that a USB hub can "have" USB ports that are not themselves part of the hub but are merely connected to the bus by the hub because it refers to "downstream ports of a hub."

Andrews Decl. at ¶¶ 38-45. Mr. Andrews says that the use of the phrase "downstream ports of a hub" suggests those ports can be "further downstream" and not "themselves part of the hub." Andrews Decl. at ¶¶ 38-40. But, in my opinion, a POSITA would understand "downstream ports of a hub" to refer to the ports that are a part of a hub on the downstream side. I do not believe that a POSITA would understand "downstream ports of a hub" to include ports that are not a part of the hub but "further downstream" since a USB hub is agnostic to what is downstream from it. For example, a USB 2.0 hub does not have access to any information regarding the number of ports in a downstream hub that is connected to it. The information available to a hub, such as the number of ports that the hub has, or the status of each of its downstream ports, is stored within the hub in static memory descriptors, or in locally stored values such as the port status. [USB 2.0 Specification pg. 426-430]. I do not think a POSITA would understand the hub to "have" ports that it has no knowledge about.

79. Mr. Andrews' interpretation of how many ports a USB hub has is inconsistent with how actual USB hubs report the number of ports that they have. A USB hub returns the value named bNbrPorts in its Hub Descriptor data structure. The bNbrPorts value is the "[n]umber of downstream facing ports that this hub supports," [USB 2.0 Specification pg. 417] not the number of ports that may exist downstream of the hub that are supported by other hub hardware.

80. To the extent Mr. Andrews is simply arguing that a USB hub ***module*** can have downstream ports, that position is unremarkable. As discussed above, the patents use the term "USB hub" to refer to a component of the "USB hub module." That the USB hub module (in the red box) can "have" (*i.e.*, include) the Consumer Facing Ports (in purple) does not change the fact that the claimed USB hub (in blue) cannot "have" those ports.

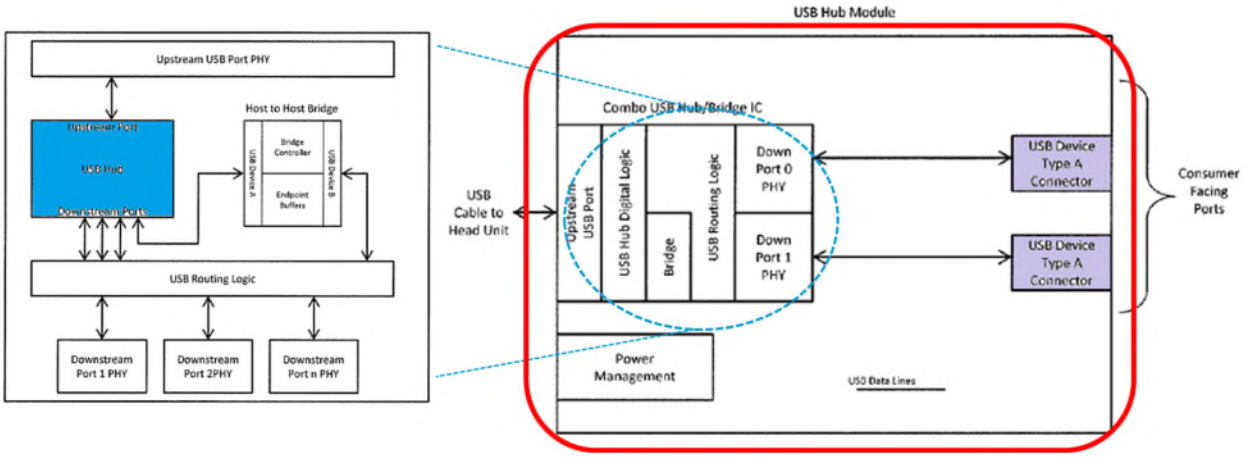

81. Mr. Andrews's interpretation contradicts the claim language. I note that the claims at issue separately use both the term "having" and the term "interconnected to" as part of the same limitation. '037 patent, cl. 1 ("a USB Hub ***having*** a plurality of USB Ports and ***interconnected to*** the embedded USB Host system"); '899 patent, cl. 1 ("providing a USB hub ***having*** a plurality of USB ports ***interconnected to*** the USB host"). In my opinion, this strongly implies that each term has a different meaning and a POSITA would also have had that same understanding.

82. The portions of the specification Mr. Andrews relies upon similarly undermine his interpretation of "having." Andrews Decl. at ¶¶ 46-47. Mr. Andrews claims that Figure 1 of the patent shows that the USB hub "has" both (1) the "Downstream USB Port [n]" (gray below); and (2) the consumer-facing external ports (purple below).[5] *Id.* In the first instance, Mr. Andrews' opinion conflates the USB hub ("USB Hub IC") with the "USB Hub Module." As depicted below, only the latter can be said to have the consumer-facing external ports. Moreover, Mr. Andrews' applying logic would yield absurd results, as it would mean the USB hub would also have the vehicle (yellow below), the consumer devices connected via the consumer facing points, and any other connected devices. That would not make sense to a POSITA.

[5] I note that Figure 1 has to do with the prior art, not the alleged invention.

Figure 1

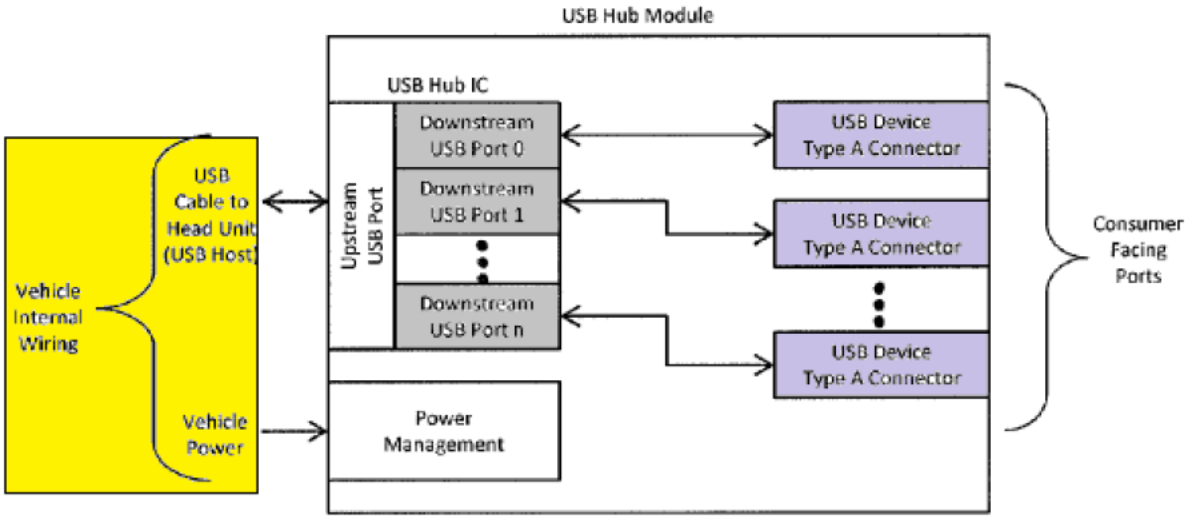

83. Finally, it is my opinion that there are multiple possible ways that this term can be "corrected" or "revised," each resulting in a different claim scope:

(a) "USB hub" could be changed to "USB hub module" so that the claim would encompass a hub module that includes both the Down PHY ports and Consumer Facing Ports;

(b) there could be multiple pluralities of ports such that limitation [1] refers to a "first" plurality of ports (Down PHY ports) and limitation [2] refers to a "second" plurality of ports (Consumer Facing Ports) so that the claim would encompass the hub and the Down PHY and Consumer Facing Ports; or

(c) "having" could be changed to "interconnected to"—which Aptiv actually proposed in footnote 1 of its infringement contentions—such that the claim would encompass just the hub and the Consumer Facing Ports.

84. It is therefore my opinion that a POSITA would not have understood the scope of claim 1 of the '037 patent and claim 1 of the '899 patent with reasonable certainty.

D. Term 6: "providing efficient communications among USB components of a data communication system" ('072 patent, cl. 1)

Microchip's Proposed Construction	Aptiv's Proposed Construction
Indefinite	**Not indefinite**

85. Claim 1 of the '072 patent recites "***providing efficient communications among USB components of a data communication system*** that includes a first input port, a second input

port, a USB hub, a USB bridge connected to the USB hub, an embedded USB host connected to the USB hub, a USB port connected to a USB device capable of operating in a USB Host mode and a USB device mode, and USB multiplexing switches connected to the USB port, the USB hub, and the USB bridge." In my opinion, the term "***providing efficient communications among USB components of a data communication system***" does not provide reasonable certainty to a POSITA as to the scope of the alleged invention.

86. I start by noting that Aptiv stated that "there is no common metric for efficiency in the context of USB networks." Brief at 12; Andrews Decl. at ¶ 48. I agree with this. I am not aware of any well-understood meaning of "efficient" or "efficiency" as it relates to communications in USB systems. I therefore agree with Mr. Andrews that there is no common metric for efficiency in the context of USB communications, which, in my opinion, makes this term indefinite.

87. I understand that Mr. Andrews opined that one type of supposed "efficiency" described in the patent is related to the "need for additional cables and ports" and/or "a special 'On-The-Go' port to be installed." Andrews Decl. at ¶¶ 49-50. This opinion, however, does not appear related to the term at issue, which refers to "providing efficient ***communication***." The use of additional cables and/or special ports is not necessarily related to the efficiency of the communications. Nor has Mr. Andrews opined that it is. It is therefore my opinion that the supposed advantages related to cables and special ports described in the patent do not clarify the scope of this term.

88. I understand that Mr. Andrews opined that a POSITA would have understood efficient "to be a laudatory description of the result of performing" the "receiving" and "routing" steps on the claimed elements. Andrews Decl. at ¶¶ 51-52. I disagree for multiple reasons. First, Mr. Andrews appears to agree that the ***second*** half of the "providing efficient communications"

limitation is limiting because it sets forth the components on which the steps are to be performed. In my opinion, a POSITA would have understood that the ***first*** half of the limitation, not just half of the limitation, also limits the claim.

> providing efficient communications among USB components of a data communication system that includes a first input port, a second input port, a USB hub, a USB bridge connected to the USB hub, an embedded USB host connected to the USB hub, a USB port connected to a USB device capable of operating in a USB Host mode and a USB device mode, and USB multiplexing switches connected to the USB port, the USB hub, and the USB bridge;

89. I do not see any reason in the claims, specification, or file history that would indicate to a POSITA that the disputed portion of the limitation is non-limiting. Further, I understand that the preamble to the claim may not be limiting, but the term at issue is not in the preamble. Thus, in my opinion, there is nothing in the claims or the specification that would indicate "providing efficient communication" does not limit the claim.

90. Second, the '072 patent is one of six related patents asserted in this litigation. Other Asserted Patents have similar claims, with similar structures and steps, that do not require "providing efficient communication." For example, claims 5 and 10 of the '643 patent recite similar communication steps (i.e., "receiving first USB host signals…," "routing the second USB signals…," "receiving second USB signals…," and "routing the second USB signals…") on similar components, without requiring efficient communications. In my opinion, a POSITA would have understood that the patentee's choice to include this claim term in the '072 patent but not in other patents confirms that "efficient communication" is a required, substantive claim element.

E. Term 7: "wherein the USB hub and USB bridge have different components and functionality" ('643 patent, cls. 1, 5, 10)

Microchip's Proposed Construction	Aptiv's Proposed Construction
Indefinite	**Not indefinite**

91. The three independent claims of the '643 patent recite two separate components: a "USB hub" and a "USB bridge." Those claims also separately recite "wherein the USB hub and USB bridge have different components and functionality." It is my opinion that this additional limitation that "the USB hub and USB bridge have different components and functionality" is indefinite because a POSITA would not have understood what it means, and therefore would have been unable to ascertain the scope of the claim with reasonable certainty.

92. As an initial matter, a POSITA would have been familiar with the recited components: "USB hub" and "USB bridge." These are well-known parts with well understood functions and underlying components. A POSITA would have known that a USB hub is used to connect an upstream host to multiple downstream devices. A POSITA would have known that a USB bridge is used to allow two USB hosts to communicate. A POSITA would have also known that, given these different functions, the hub and bridge necessarily have different underlying components to achieve those different functions.

93. Furthermore, a POSITA would have recognized that the claims themselves recite that that the USB hub is connected to the USB bridge and that communications sometimes are routed through the bridge to the hub and other times directly to the hub. A POSITA would have therefore understood that the claims themselves require that the USB hub and USB bridge are separate components that must be linked together. The fact that the hub and the bridge are different components suggests that they "have different components." Mr. Andrews agrees that components

refer to the physical components that make up the USB hub and bridge. *See* Andrews Decl. at ¶¶ 53-55.

94. Given these inherent differences in functionality and components, a POSITA would not have understood the scope of the additional limitation "the USB hub and USB bridge ***have*** different components and functionality."

95. I disagree with Mr. Andrews' position that this additional limitation means "that the hub and the bridge (1) do not have coextensive components, such that either the hub has some component(s) that the bridge does not, vice versa, or to, and (2) do not have identical functionality such that either the hub performs some function that the bridge does not, or vice versa, or both." Andrews Decl. at ¶ 56. That is already required by the claims through the use of the two different well-known terms and other claim language requiring them to connect to each other. Mr. Andrews has not argued otherwise.

96. It is unclear, however, what ***additional*** differences are required by the additional limitation. As to functionality, as already discussed above, both a hub and bridge were well-known components with well-known functions.

97. A POSITA would not have understood whether the claim requires that the hub and bridge must perform different types of functions or whether the claim requires that the hub and bridge must perform different, physically distinct actions (e.g., separate operations that do not operate jointly on the same signals or data) or what degree of difference might be required by this limitation.

98. Adding to the confusion is the fact that the claims themselves already recite different functions to be performed by the bridge and hub, so it would have been unclear to a POSITA what additional differences in functionality would be required by this limitation. Again,

it is my opinion that there must be some additional requirement beyond the normal functional distinctions between a hub and a bridge. But a POSITA would not know what is required by this added limitation, which, in my opinion, renders it indefinite.

99. As to different components, there are many ways the components could be different. For example, the hub and bridge could be made with different component types, *e.g.*, a hub made with bipolar transistors and a bridge made with CMOS transistors. But even if the limitation were read to refer to the "type" of component, a POSITA would still not know whether the limitation requires that the hub and the bridge have only one different component, or must have all different components (mutually exclusive sets).

100. The hub and bridge could also be made with different physical components. For example, although the hub and bridge are made with the same type of components (*e.g.*, transistors or logic cells), each is made with discrete sets of these components and does not use the same physical transistors or logic cells. But again, even if this were the case, a POSITA would still not know whether the limitation requires that the hub and the bridge have only one different physical component, or that each must have its own complete set of physically different components.

101. In my opinion, the specification only adds to the confusion. Although the specification describes the well-known hub and bridge at a high level, there is no component level detail of the hub and only a high-level summary of functional blocks and components that "may" be used in a bridge. '643 patent, 1:63-2:20, 7:22-8:42. There are no schematics or fabrication process descriptions. The specification describes one embodiment (Fig. 4), where the bridge and hub are built with discrete components. EX1011, 5:24-27. But in another embodiment (Fig. 5), the bridge and hub are both part of the same IC, and the specification contrasts this with building the hub and bridge "with discrete components." *Id.*, 7:15-21, Figs. 4-5. For this embodiment, the

specification only depicts the hub and bridge at a conceptual level, without depicting or describing any of the underlying "discrete components." *Id.* But, in my opinion, a POSITA would have known that different circuit blocks on an IC might share the same circuity for various circuits, *e.g.*, power circuits and memory elements. But the specification and the rest of the intrinsic record does not make clear whether this sharing occurs. It is therefore my opinion that the specification does not disclose whether the hub and bridge are made with (i.e., "have") different component types or different sets of physical components (which could be the same types of components).

102. Mr. Andrews also opines that, because a chip may include distinct functional components (e.g., RAM, ROM, and LCD driver), devices may have different components and functionality even if they reside on the same chip. Andrews Decl. at ¶¶ 60-62. But this only highlights the indefiniteness of the claim term at issue. Namely, if a POSITA would understand that the various functional devices on a chip are distinct, that begs the question of what ***additional*** meaning is imparted by the phrase "wherein the USB hub and the USB bridge have different components and different functionality. In my opinion, this additional express limitation would have only confused a POSITA, because a POSITA would not understand what differences are required beyond the inherent differences between these two components.

F. Term 8: "signal detection circuit" ('643 patent, cls. 1, 5)

Microchip's Proposed Construction	Aptiv's Proposed Construction
Indefinite means-plus-function term **Function: determining whether a connected device is operating in host mode** **Corresponding structure: none**	**35 U.S.C. § 112(6) does not apply; not indefinite**

103. Claims 1 and 5 of the '643 patent require a "signal detection circuit" that makes "a determination … that the consumer device is operating in a USB host mode … [or] is operating in a USB device mode" (claim 1) or "determining … whether the second USB signals emanate from

a second USB host" (claim 5). It is my opinion that "signal detection circuit" therefore must be capable of performing the function of determining whether a connected device is operating in host mode.

104. In my opinion, the term "signal detection circuit" has no well understood meaning in the field and does not connote any particular structure or class of structures.

105. A "circuit" is a generic term that refers to any composition of electronic components. I have considered the definition of "circuit" that Mr. Andrews included in his declaration. Andrews Decl. at ¶ 65. That definition, however, does not connote a specific structure. To the contrary, it leaves open the possibility that any combination of electronic components may be covered.

106. Similarly, "signal detection" does not connote a particular structure. A POSITA would have understood that there are many ways to perform that function but would not have associated it with any particular structure. I have considered Mr. Andrews' definition of signal detection as "detecting the presence of a signal in noise," but that is just a functional definition that does not provide structure or imply a class of structures. Andrews Decl. at ¶ 66. There are a nearly unlimited variety of components and circuits which might perform the function in Mr. Andrews' definition. As such, a POSITA would not have associated this term with any particular structure or class of structures.

107. Thus, although "signal detection" implies some sort of function, it does not connote any specific structure. In my opinion, there is also no structure implied by any of the other language in the claims. For example, nothing in the claims describes how the claimed "signal detection circuit" receives signals and detects the USB mode of the consumer product. Nor is there anything in the claims that describes what structure would accomplish those functions. As mentioned, even

Mr. Andrews' proposed definition only recites a function, without any structure. Nowhere in his declaration does Mr. Andrews identify any specific structure that performs the required function of determining whether a connected device is operating in host mode. Andrews Decl. at ¶¶ 63-71.

108. Furthermore, it is my opinion that there is nothing in the claims, such as any claimed interactions with other components, that would connote structure to a POSITA.

109. Because "signal detection circuit" has no well understood meaning in the field and does not indicate any particular structure, it is my opinion it is a means-plus-function term. Accordingly, I understand that the term "signal detection circuit" is indefinite if the specification does not disclose structure corresponding to the claimed function.

110. Having thoroughly reviewed the specification, it is my opinion that the specification discloses no such corresponding structure. There is nothing in the specification that would inform a POSITA of the structure of a "signal detection circuit." In fact, that term is never used in the specification.

111. I understand that Mr. Andrews relies upon certain sections in the USB 2.0 specification to argue that a POSITA would have understood the term "signal detection circuit" to connote structure. Andrews Decl. at ¶¶ 68-71. I disagree. Although I agree that a POSITA would have been generally familiar with the USB 2.0 specification at the time, the USB 2.0 specification only allows for a single USB host. It therefore does not describe any structure for determining if the device is operating in host or device mode such that different communication paths may be used.

112. None of the sections of the USB 2.0 specification relied upon by Mr. Andrews disclose any structure or other means for making this determination. For example, section 4.6 describes certain functions of the USB system at a high level and is unrelated to the determination

of whether a particular device is operating in host mode or device mode. A POSITA would understand that the methods used for detection of attachment and removal of USB devices were only applicable to the detection of USB devices or hubs plugged into a downstream port of a hub. This is because, among other reasons, the USB specification forbids that type of connection to another USB host. A POSITA would understand that the process of USB bus enumeration requires the exchange of data structures using USB data packets over an operational USB link between the USB host and a USB device[6] on the same USB bus. A POSITA would understand that USB bus enumeration cannot be used to determine if a device connected to a USB bus is "operating in in host mode," since a device operating in host mode cannot be connected to a USB bus with another host controller, and USB bus enumeration is a process conducted by the USB host which is controlling the USB bus.

113. Section 7.1 of the USB 2.0 specification describes a circuit used for data communication generally, but not for determining if a device is in host or device mode. As I explained in Section V above, USB transceivers are located at either end of a USB bus segment. One transceiver is located at a downstream facing hub port, and the other is located at the upstream facing port of a USB device or USB hub. Due to the prohibition of, and inability to electrically connect a second USB host to a USB bus, a POSITA would understand that the transceivers shown in section 7.1 would never be operating in a situation where a downstream port on a USB bus with an existing host was simultaneously connected to another USB host.

114. I further understand that Aptiv relies upon an unrelated patent (U.S. Patent No. 7,282,965 ("the '965 patent")) entitled "signal detection circuit capable of automatically adjusting threshold value." Brief at 16. I have carefully reviewed the '965 patent. In my opinion, this patent

[6] For purposes of enumeration the USB host interacts with a hub's controller as a USB device.

does not mean "signal detection circuit" has a well understood meaning or structure to a POSITA. To the contrary, the "signal detection circuit" in the '965 patent is supposed to be a specific, inventive structure, such as the one shown in Figure 1. Furthermore, the function performed by the "signal detection circuit" described in the '965 patent is not for determining if a device is operating in USB host or USB device mode, but for automatically adjusting a threshold value during packet transmission on an already operating serial bus segment link at the receiving end of the segment's cable. The '965 patent discloses a specific design for a circuit which is intended for use with serial ATA buses but is generally related to the squelch circuits used in USB high speed capable transceivers. The Transmission Envelope Detector, used in USB high speed capable transceivers, determines the amplitude of differential data signals arriving at the receiver, and whether they are strong enough so that the receiver should consider the data signals to be valid, or if the link is in the Squelch state. [USB 2.0 pgs. 121, 123, Fig 7-1 at pg. 120]. The '965 patent's circuit can't be used to detect what type of USB device (host or device) is connected to the bus segment it is connected to. Regardless of whether the packet came to the receiver from a host or a device its squelch value would be identical, either true or false. A POSITA would have understood that the structure described for the "signal detection circuit" in the '965 patent could not be used for the "signal detection circuit" claimed in the '643 patent.

G. Term 9 : "routing logic circuit" ('643 patent, cls. 1, 5, 10)

Microchip's Proposed Construction	Aptiv's Proposed Construction
Indefinite	**Not indefinite**

115. All of the claims of the '643 patent require a "routing logic circuit." Claim 1 requires both (a) "routing the USB signals emanating from the consumer USB device to the first USB port ***via a routing logic circuit*** connected directly to a USB bridge and a USB hub connected to the USB bridge" and (b) "routing the USB signals emanating from the consumer USB device

to the first USB port ***via the routing logic*** connected directly to the USB hub" depending on what mode the consumer device is operating in. The other claims recite substantially similar functions of the routing logic circuit. But this is not a term that would be used by a POSITA to describe a component that performs the required function of routing a USB signal depending upon whether the consumer device is in host or device mode. In my opinion, a POSITA would not have understood "routing logic circuit" to be a well-understood component.[7] It is therefore my opinion that a "routing logic circuit" for routing a USB signal depending upon whether the consumer device is in host or device mode is a term that was created for this patent. As such, the term "routing logic circuit" does not have a plain and ordinary meaning in this context.

116. Further, the intrinsic record does not inform a POSITA as to the boundaries of that term with reasonable certainty. For example, the term "routing logic circuit" was never defined or explained in the specification.

117. It is my opinion that this is a different situation than "signal detection circuit" where there is no connotation of possible structures because, unlike for "signal detection circuit," the claimed interactions of "routing logic circuit" with other components at least implies one possible structure.

118. As I discussed above, a "circuit" is just a generic term for electronic components and the term "routing logic" does not clarify the scope of the term for the recited functionality. The phrase "routing logic" could be used by POSITAs to refer to any number of components that direct the path of data, but a POSITA would not understand the objective scope of the term.

119. I understand that Mr. Andrews has opined that a POSITA would have understood that one possible structure that could be used as a "routing logic circuit" would have been a "USB

[7] I render no opinion as to how this term may be understood in other contexts. It is my opinion that this term does not have objective boundaries for the recited functions.

multiplexing switch" that can route signals over different paths (either directly to a hub or through a bridge). Andrews Decl. at ¶ 73. Mr. Andrews goes on to state that "a POSITA would have understood that this routing could be implemented using electronically controlled switches, or using digital logic gates." Andrews Decl. at ¶ 73.

120. I disagree in part. For example, in my opinion, a POSITA would understand that the switches shown in Fig. 4 of the '643 patent are located on a USB bus segment, downstream from the transceivers labeled Down 1 PHY, Down 2 PHY, and Down 3 PHY. Given the location, a POSITA would recognize that the signals in that embodiment could not be "routed" or otherwise re-directed by "using digital logic gates" because, between the transceivers, the bus signals are differential multiple state signals that cannot be processed using digital logic gates. Even if they could, it is my opinion that this single example would not inform a POSITA as to the objective boundaries of "routing logic" circuit in for the recited functions.

121. Mr. Andrews has opined that there are other examples of a "routing logic circuit" in the specification, and there are other well-known technologies that could accomplish the functions the "routing logic circuit" is supposed to perform. Andrews Decl. at ¶¶ 74-76. In my opinion, however, this again does not inform a POSITA as to the objective boundaries of a "routing logic circuit" in the claims.

122. As an initial matter, I note that all of the independent claims recite both a "routing logic ***circuit***" and "the ***routing logic*** connected directly to the USB hub." In my opinion, a POSITA would have understood that the phrase "routing logic" in the claims refers to "routing logic circuit" based upon the parallel structure in the language of the claims: "routing the USB signals emanating from the consumer USB device to the first USB port ***via a routing logic circuit*** connected directly

to a USB bridge and a USB hub . . . routing the USB signals emanating from the consumer USB device to the first USB port ***via the routing logic*** connected directly to the USB hub."

123. In my opinion, the scope of the "routing logic circuit" is indefinite given dependent claim 3, which recites "the bypassing the USB bridge [the second function performed by the routing logic switch above] is performed ***by a USB routing switch***." I understand that dependent claims are supposed to narrow the independent claim from which they depend. Here, the only difference is that one of the functions performed by the "routing logic circuit" is performed by a USB routing switch. A POSITA would have therefore understood that "routing logic circuit" encompasses more than just a USB routing switch, but would not have known what else is encompassed, rendering the term indefinite.

124. In my opinion, the fact that "routing logic circuit" has a different scope than a routing switch is confirmed by the other related patents in this litigation that use "USB routing switch" or "USB multiplexing switch" instead of "routing logic circuit." *See, e.g.*, '899 patent, cl. 1 ("USB routing switch"); '420 patent, cl. 1 (same); '037 patent, cl. 1 (same); '962 patent, cl. 1 (same); '072 patent, cl. 1 ("USB multiplexing switches"). It is my opinion that a POSITA would have understood the patentee intended for "routing logic circuit" to mean something different or else he would have just used "USB routing switch" or "USB multiplexing switch" instead.

125. I have carefully considered the specification as well. Nothing in the specification explains the circuit or logic in the "routing logic circuit." Figures 5 and 6 contain boxes labeled "USB Routing Logic," and the specification states that the bridge may be "configured to act as an OTG port thus negating the need for switches and/or ***routing logic***." '643 patent, 7:2-3. But this language, if anything, suggests to a POSITA that a routing logic circuit is an alternative to a

switch—in contrast to the claims which, as I discussed above, suggest a switch is a type of routing logic circuit.

126. It is therefore my opinion that a POSITA would not have understood the objective boundaries of the claims reciting "routing logic circuit" with reasonable certainty.

H. Term 10: "some combination of embedded devices and consumer devices that are USB Devices along with at least one that is the second USB Host" ('037 patent, cl. 16)

Microchip's Proposed Construction	Aptiv's Proposed Construction
Indefinite	**Not indefinite**

127. Claim 1 recites a "system" comprising "an embedded [USB] Host system" and a port to which "a consumer device [is] connected." '037 patent, cl. 1. Dependent Claim 16 adds the requirement: "wherein the system further comprises an infotainment system, wherein the system[8] is configured to support simultaneous active USB data connections between the infotainment system and ***some combination of embedded devices*** and ***consumer devices*** that are USB Devices along with at least one that is the second USB Host." It is my opinion that claim 16 of the '037 patent is indefinite for multiple reasons.

128. First, it is unclear from the claims whether the previously claimed "embedded [USB] Host system" is part of the infotainment system, which is on one side of the communication, or part of the "embedded devices," which are on the other side of the communication.

129. Claim 5 of this patent recites that the "infotainment system contain[s] the embedded USB Host system." There is no such requirement for claim 16, so its location is unclear.

130. Aptiv, itself, moreover, has taken inconsistent positions on this. In its brief, it argues that the embedded USB host is part of the infotainment system. Brief at 18 ("infotainment system

[8] The reference to "system" in claim 16 has no modifying adjective. It could therefore refer to three different systems: (1) the entire claimed system; (2) the embedded USB host system in claim 1; or (3) the infotainment system in claim 16. This adds further ambiguity to claim 16.

(i.e. the head unit)"), *id.* at 19 ("vehicle's embedded USB host (head unit)"). It says similar things in its infringement contentions. Aptiv's Infringement Contentions, Ex. D at 71 ("an ***infotainment system containing the embedded USB Host system***"). Also in its infringement contentions, however, Aptiv argues that the embedded USB Host is one of the embedded devices. Aptiv's Infringement Contentions, Ex. D at 71 ("some combination of embedded devices (***e.g., the embedded USB host***)"). These inconsistent positions confirm that the scope of the claims is not reasonably clear to even the patent owner, much less a POSITA. Or, if both are true, the same "embedded device" would appear on both sides of the connection, which would not make sense to a POSITA. In my opinion, nothing in the intrinsic record clarifies this ambiguity.

131. Second, it would have been unclear whether the "combination" requires at least one embedded device ***and*** at least one consumer device are required by the claim. After reviewing Aptiv's brief and infringement contentions, it appears that Aptiv's position is that this "combination" may be met by a single consumer device (i.e., a "combination" with just one device that is not an embedded device). Brief at 20 ("What specific combinations of those devices the system must accommodate is immaterial."); Aptiv's Infringement Contentions, Ex. D at 71.

132. This interpretation is inconsistent with the normal usage of "combination." For example, a "combination" is defined as "the mixture you get when ***two or more things*** are combined." Ex. 4 (https://dictionary.cambridge.org/us/dictionary/english/combination). One common example of this is creating a password with a "combination" of letters and numbers, which would not be satisfied by a password using only letters. The screenshot below shows an example of how a website notifies users that a combination of password character types is required. When I enter a string of only letters, the system alerts me that my password strength is "WEAK" and puts up a red stop indicator. If I try to save my password at this point, it fails. If, however, I

add a number at the end to make it a “combination” of letter and numbers, it updates the password strength to “STRONG” and displays three green dots indicating I can proceed. When I try to save my password now, it succeeds.

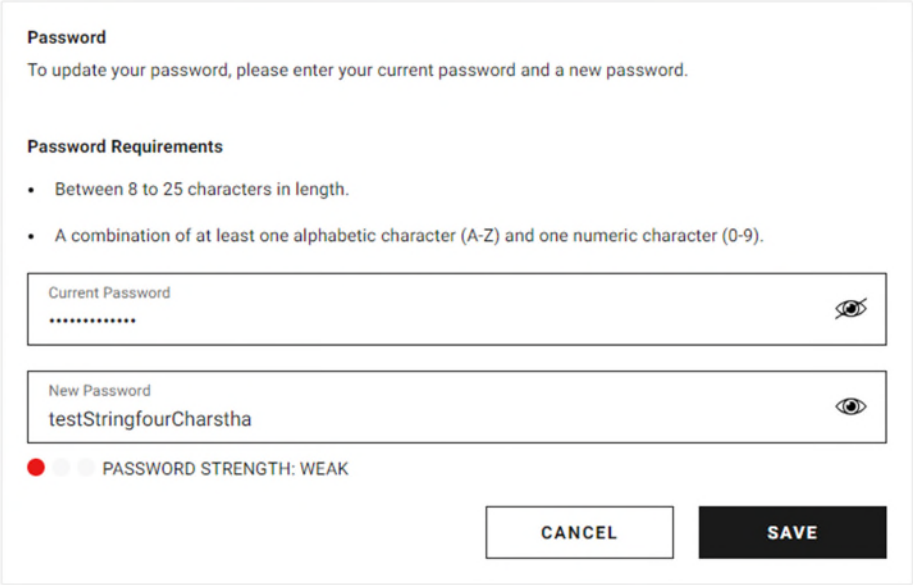

[williams-sonoma.com password update dialog]

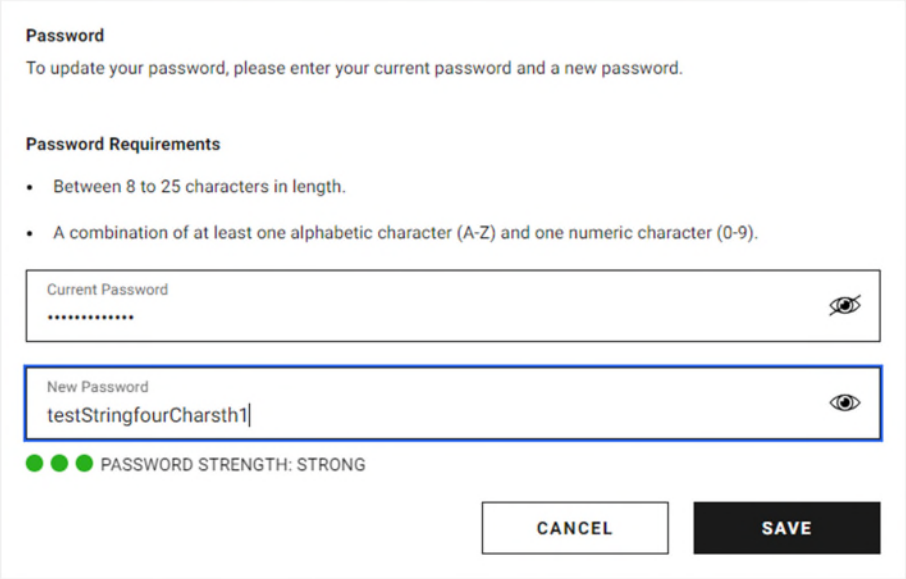

[williams-sonoma.com password update dialog]

133. I have carefully considered the specification and there is nothing in the intrinsic record that would clarify these ambiguities. In my opinion, this term is indefinite.

Aptiv Exhibit 2016 Page 45
Microchip v. Aptiv IPR2024-00229

I declare under penalty of perjury under the laws of the United States of America that the foregoing is true and correct, and that all statements reflect my opinions based upon my knowledge and experience.

Date: February 7, 2024

Robert Dezmelyk