DocuSign Envelope ID: 21006CD8-3A89-44EF-9ECF-DF7EDF8B0033

IN THE UNITED STATES PATENT AND TRADEMARK OFFICE

BEFORE THE PATENT TRIAL AND APPEAL BOARD

MICROCHIP TECHNOLOGY INC.,
Petitioner,

v.

APTIV TECHNOLOGIES AG AND APTIV TECHNOLOGIES LIMITED,
Patent Owners.

Case No. IPR2024–00228
U.S. Patent No. 9,619,420

DECLARATION OF ERIC WELCH

DocuSign Envelope ID: 21006CD8-3A89-44EF-9ECF-DF7EDF8B0033

TABLE OF CONTENTS

I. INTRODUCTION 5
II. QUALIFICATIONS 6
III. COMPENSATION 8
IV. MATERIALS CONSIDERED 8
V. UNDERSTANDING OF THE LAW 14
A. Legal Standards 14
1. Claim Construction 14
2. Burden of Proof 15
3. Anticipation 15
4. Obviousness 15
5. Legal Standard for Invalidity Based on Written Description and Enablement Under 35 U.S.C. § 112 ¶1 18
6. Indefiniteness 21
B. Priority Date 21
C. Level of Skill in the Art 22
VI. TECHNOLOGY BACKGROUND 24
A. USB Basics 25
1. Hosts and Devices 26
2. USB Hubs 30
B. Dual-Role Products 33
1. Host/Device Detection 36
2. Routing Switches 44
C. Host-to-Host Bridges 49
D. Automotive USB Applications 50
E. USB Power Delivery Specifications 53

Microchip Ex. 1013, p. 2
Microchip v. Aptiv
IPR2024-00228

Aptiv Exhibit 2011 Page 2
Microchip v. Aptiv IPR2024-00229

DocuSign Envelope ID: 21006CD8-3A89-44EF-9ECF-DF7EDF8B0033

VII. THE CHALLENGED PATENTS 54

A. Summary of the Challenged Patents 55

B. File History 60

VIII. THE PRIOR ART REFERENCES 69

A. Chang Summary 69

B. Chang II Summary 72

C. Chutorash Summary 83

D. AN96527 Summary 86

IX. MOTIVATION TO MODIFY CHANG IN VIEW OF CHANG II AND THE KNOWLEDGE OF A POSITA 87

X. MOTIVIATION TO MODIFY CHANG IN VIEW OF CHANG II, CHUTORASH, AND THE KNOWLEDGE OF A POSITA 106

XI. MOTIVIATION TO MODIFY CHANG IN VIEW OF CHANG II, AN96527, AND THE KNOWLEDGE OF A POSITA 109

XII. CLAIM TERMS 112

A. "Embedded USB Host" 112

XIII. SUMMARY OF OPINIONS 113

XIV. UNPATENTABILITY ANALYSIS 114

A. Ground 1 (Claims 1-12 and 15-17): Chang in view of Chang II and POSITA Knowledge 114

1. Claim 1 114
2. Claim 2 141
3. Claim 3 146
4. Claim 4 151
5. Claim 5 154
6. Claim 6 155
7. Claim 7 156
8. Claim 8 160
9. Claim 9 161

Microchip Ex. 1013, p. 3
Microchip v. Aptiv
IPR2024-00228

Aptiv Exhibit 2011 Page 3
Microchip v. Aptiv IPR2024-00229

DocuSign Envelope ID: 21006CD8-3A89-44EF-9ECF-DF7EDF8B0033

10. Claim 10 161
11. Claim 11 162
12. Claim 12 162
13. Claim 15 163
14. Claim 16 170
15. Claim 17 173

B. Secondary Considerations of Nonobviousness 177

XV. CONCLUSION 188

Microchip Ex. 1013, p. 4
Microchip v. Aptiv
IPR2024-00228

Aptiv Exhibit 2011 Page 4
Microchip v. Aptiv IPR2024-00229

DocuSign Envelope ID: 21006CD8-3A89-44EF-9ECF-DF7EDF8B0033

I. INTRODUCTION

1. I have been retained by counsel for Microchip Technology Inc. ("Microchip" or "Petitioner") in the above-captioned matter as an independent consultant to offer opinions regarding the patentability of the claims in U.S. Patent No. 9,619,420 ("the '420 patent"), U.S. Patent No. 9,645,962 ("the '962 patent"), U.S. Patent No. 11,176,072 ("the '072 patent"), and U.S. Patent No. 11,681,643 ("the '643 patent"). Collectively, I refer to these patents as the Challenged Patents. As I discuss below, other than certain new matter in the '962 patent, the Challenged Patents share a common specification. Because of the similarities in my opinions regarding the Challenged Patents, my declarations from §§I-XII are identical, but from §XIII onward is unique to the patent for the specific petition that this declaration accompanies.

2. In the preparation of this Declaration, I have confined my analysis to the materials and opinions that were available at the time of the preparation of this Declaration. Should new materials, analyses, or opinions be introduced subsequent to the filing of this Declaration, I reserve the right to provide supplementary Declarations to the extent necessary to address any such newly introduced items.

3. If requested, I am prepared to explain (in a deposition or at a trial before the Patent Trial and Appeal Board (the "Board")) the technology disclosed in the Challenged Patents—including the state of the art in the relevant timeframe.

DocuSign Envelope ID: 21006CD8-3A89-44EF-9ECF-DF7EDF8B0033

Similarly, I am prepared to explain the technology disclosed in the Chang (EX1014, U.S. Patent Pub. 2006/0206650) and Chang II (EX1015, U.S. Patent Pub. 2009/0268743) references, and in any other prior art references cited herein. This may include, among other things, background information on USB technology and standards.

II. QUALIFICATIONS

4. My qualifications to testify as an expert in USB technology are set forth in my *curriculum vitae* attached as Appendix A—which includes a listing of cases in which I have provided expert testimony.

5. I am an expert with nearly 50 years of experience in the fields of electrical and software engineering, and product development for consumer, medical, industrial, aerospace, and other applications.

6. From 1976 to 2007, I was Vice President of Engineering and CTO of InnoSys Incorporated and its Keyspan division. The Keyspan division developed and marketed to the retail channel several lines of computer peripheral and communications devices such as USB adapters, computer remote control devices, USB and FireWire add on cards, and related technology. I personally designed and developed core technology for the Keyspan business, resulting in an increase in sales from less than $1MM in 1997 to $13MM in 1999.

Microchip Ex. 1013, p. 6
Microchip v. Aptiv
IPR2024-00228

Aptiv Exhibit 2011 Page 6
Microchip v. Aptiv IPR2024-00229

DocuSign Envelope ID: 21006CD8-3A89-44EF-9ECF-DF7EDF8B0033

7. From 2007 to the present, I have been president of Bramson Welch & Associates, Inc., an Engineering Services consultancy specializing in embedded systems, USB, Bluetooth, data communications, mobile devices, iPhone accessories, and litigation services, including data analysis and expert witness work. I serve as System Architect and Project Strategist on all Bramson Welch projects. I frequently work with multiple client groups to coordinate design and architecture across many different technical and organizational domains.

8. I have over twenty-five years of significant experience specifically with the development of USB peripherals, adapters, hosts, and special purpose devices. For example, I was responsible for the design and development of the Keyspan USB/serial adapter, the first working serial adapter for the Apple iMac in the mid-1990s, which is still shipping today. Also, for example, I was responsible for the design and development of Keyspan's network-attached host adapter, a device with an ethernet network connection and four USB Host ports. As yet other examples, while at Keyspan and later at Bramson Welch, I was responsible for the design and development of dozens of USB peripheral devices, including class device interface (*i.e.*, storage, HID, and communication adapters), and vendor-specific devices that do not fit any of the existing USB classes. I am also a senior member of the Institute of the Electrical and Electronics Engineers association (IEEE).

Microchip Ex. 1013, p. 7
Microchip v. Aptiv
IPR2024-00228

Aptiv Exhibit 2011 Page 7
Microchip v. Aptiv IPR2024-00229

DocuSign Envelope ID: 21006CD8-3A89-44EF-9ECF-DF7EDF8B0033

9. I also have specific experience with USB entities that can function either as a USB Host or as a USB Device, including several prominent smartphone platforms, where role detection and role switching are important features.

10. My curriculum vitae contains further details regarding my experience, education, publications, and other qualifications which allow me to render expert opinions in connection with this proceeding.

III. COMPENSATION

11. I am being compensated for my work in this matter at an hourly rate of $395 for consulting services. My compensation does not depend on the content of my opinions or the outcome of this investigation.

IV. MATERIALS CONSIDERED

12. In preparing this declaration, I reviewed and considered the following materials, along with any other materials referenced in the body of my declaration:

Exhibit	Description
1001	U.S. Patent No. 9,460,037 ("'037 patent")
1002	Patent Prosecution History for U.S. Patent No. 9,460,037
1003	U.S. Patent No. 9,619,420 ("'420 patent")
1004	Patent Prosecution History for U.S. Patent No. 9,619,420
1005	U.S. Patent No. 9,645,962 ("'962 patent")
1006	Patent Prosecution History for U.S. Patent No. 9,645,962
1007	U.S. Patent No. 10,545,899 ("'899 patent")

Microchip Ex. 1013, p. 8
Microchip v. Aptiv
IPR2024-00228

Aptiv Exhibit 2011 Page 8
Microchip v. Aptiv IPR2024-00229

DocuSign Envelope ID: 21006CD8-3A89-44EF-9ECF-DF7EDF8B0033

Exhibit	Description
1008	Patent Prosecution History for U.S. Patent No. 10,545,899
1009	U.S. Patent No. 11,176,072 ("'072 patent")
1010	Patent Prosecution History for U.S. Patent No. 11,176,072
1011	U.S. Patent No. 11,681,643 ("'643 patent")
1012	Patent Prosecution History for U.S. Patent No. 11,681,643
1014	U.S. Patent Publication No. 2006/0206650 ("Chang")
1015	U.S. Patent Publication No. 2009/0268743 ("Chang II")
1016	U.S. Patent Publication No. 2004/0019732 ("Overtoom")
1017	U.S. Patent Publication No. 2006/0195625 ("Hesse")
1018	*Universal Serial Bus Specification*, Revision 2.0, April 27, 2000 ("USB 2.0 Specification")
1019	*Universal Serial Bus Type-C Cable and Connector Specification*, Revision 1.2, March 25, 2016
1020	*Universal Serial Bus Power Delivery Specification*, Rev. 3.0, V1.0a, March 25, 2016
1021	*Universal Serial Bus Implementers Forum Full and Low Speed Electrical and Interoperability Compliance Test Procedure*, Revision 1.3, February 2004
1022	*On-The-Go and Embedded Host Supplement to the USB Revision 2.0 Specification*, Revision 2.0 version 1.1a, July 27, 2012 (the "OTG Supplement")
1023	*Universal Serial Bus 3.0 Specification*, Revision 1.0, November 12, 2008 ("USB 3.0 Specification")
1024	Declaration of Jeffrey L. Ravencraft re USB Specifications.
1025	U.S. Patent No. 8,683,085 ("Castleberry")

Microchip Ex. 1013, p. 9
Microchip v. Aptiv
IPR2024-00228

Aptiv Exhibit 2011 Page 9
Microchip v. Aptiv IPR2024-00229

DocuSign Envelope ID: 21006CD8-3A89-44EF-9ECF-DF7EDF8B0033

Exhibit	Description
1029	U.S. Patent No. 8,447,598 ("Chutorash")
1030	U.S. Patent No. 8,694,803 ("Rafiee")
1031	GL620USB-A: GeneLink USB PC-to-PC Networking Controller, Specification 1.6, November 17, 2000
1032	U.S. Patent Publication No. 2008/0005262 ("Wurzburg")
1033	U.S. Patent Publication No. 2007/0255885 ("Bohm '885")
1034	U.S. Patent No. 7,162,566 ("Lin")
1035	*PL-2501 Product Brochure*, Prolific Technology Inc., September 11, 2002
1036	*NET1080 USB TurboCONNECT Preliminary Specification*, Revision 0.6, NetChip Technology, Inc., January 31, 2000
1037	*M5632 Preliminary Product Brief*, ALi Corporation, September 15, 2002
1038	U.S. Patent No. 7,085,876 ("Lai")
1039	U.S. Patent Publication No. 2009/0185559 ("Chen")
1040	U.S. Patent No. 3,916,380 ("Fletcher")
1041	U.S. Patent No. 7,057,413 ("Young")
1042	U.S. Patent Publication No. 2006/0227759 ("Bohm '759")
1043	Oral Order, dated December 19, 2017 in *Microchip Technology Incorporated v. Delphi Automotive Systems, LLC et al.*, Case No. 1:17-cv-01194-JDW (D. Del.)
1045	Aptiv Technologies Limited's Responses and Objections to Microchip Technology Inc.'s First Set of Interrogatories (Nos. 1-11), dated June 12, 2023 in *Aptiv Technologies AG, v Microchip Technology Inc.*, Case No. 1:23-cv-00307-JDW (D. Del.)

DocuSign Envelope ID: 21006CD8-3A89-44EF-9ECF-DF7EDF8B0033

Exhibit	Description
1047	U.S. Patent No. 7,502,878 ("Wright")
1049	*USB in Automotive: Not Just for PCs Anymore*, Brian Ellis, Cypress Semiconductor Corp., Electronic Product News, September 1, 2006
1050	*The Car Entertainment System*, Niels Koch (published as Chapter 23 in Part 5 ("Infotainment and Navigation Systems" of *New Trends and Developments in Automotive System Engineering*, Marcello Chiaberge (Editor), InTech, 2011 (2014 Reprint))
1051	*The Car Entertainment System*, Niels Koch (published as Chapter 23 in Part 5 ("Infotainment and Navigation Systems" of *New Trends and Developments in Automotive System Engineering*, Marcello Chiaberge (Editor), IntechOpen, 2011)
1052	U.S. Patent No. 9,864,711 ("Wang")
1053	U.S. Patent Publication No. 2004/0088449 ("Sakaki")
1054	Anchor Chips Single-Chip EZ-Link (AN2720SC), product brochure dated November 1998
1055	*CMOS Circuit Design, Layout, and Simulation*, R. Jacob Baker, IEEE Press, 1st Edition (1998) ("Baker")
1056	Library of Congress Catalog Record for *CMOS Circuit Design, Layout, and Simulation*, R. Jacob Baker, IEEE Press, 1st Edition (1998)
1057	U.S. Copyright WebVoyage Record for *CMOS Circuit Design, Layout, and Simulation*, R. Jacob Baker, IEEE Press, 1st Edition (1998)
1058	Declaration of Mariellen F. Calter re *CMOS Circuit Design, Layout, and Simulation*, R. Jacob Baker, IEEE Press, 1st Edition (1998)
1059	Fairchild Semiconductor USB Switch listing from October 16, 2011 printed from Internet Archive Wayback Machine

Microchip Ex. 1013, p. 11
Microchip v. Aptiv
IPR2024-00228

Aptiv Exhibit 2011 Page 11
Microchip v. Aptiv IPR2024-00229

DocuSign Envelope ID: 21006CD8-3A89-44EF-9ECF-DF7EDF8B0033

Exhibit	Description
1060	Fairchild Semiconductor FSUSB63 3:1 High-Speed USB 2.0 Switch / Multiplexer, dated November, 2010
1061	Internet Archive Affidavit of Nathaniel E Frank-White re Exhibits 1031, 1035, 1037 and 1054
1062	Internet Archive Affidavit of Nathaniel E Frank-White re Exhibits 1036, 1049, 1050/1051, and 1058
1063	Maxim 4989 Datasheet (USB 2.0 Hi-Speed 2-of-4 Crosspoint Switch), dated August 2008
1064	Cypress Semiconductor AN96527 - Designing USB Type-C Products Using Cypress's CCG1 Controllers, dated June 3, 2015
1065	Internet Archive Affidavit of Nathaniel E Frank-White re Exhibits 1059, 1063, 1064, 1068, and 1071
1066	U.S. Patent No. 9,104,821 ("Dunstan")
1067	U.S. Patent Publication No. 2010/0265179 ("Ram")
1068	Fairchild Semiconductor FSUSB30 Low-power, Two-Port, High-Speed USB2.0 Switch, dated January 2007
1069	*The ART of Electronics*, P Horowitz and W. Hill, Cambridge University Press, 2nd Edition (1989)
1070	*Universal Serial Bus: Micro-USB Cables and Connectors Specification*, Revision 1.01, April 4, 2007
1071	Fairchild Semiconductor FSA880 / FSA881 – USB Port 2:1 Switch with Accessory and Charger Detection, dated November 2011
1072	Aptiv's Supplemental Infringement Contentions (Redline), dated November 8, 2023 in *Aptiv Technologies AG, v Microchip Technology Inc.*, Case No. 1:23-cv-00307-JDW (D. Del.) [PROTECTIVE ORDER MATERIAL - FILED UNDER SEAL]

Microchip Ex. 1013, p. 12
Microchip v. Aptiv
IPR2024-00228

Aptiv Exhibit 2011 Page 12
Microchip v. Aptiv IPR2024-00229

DocuSign Envelope ID: 21006CD8-3A89-44EF-9ECF-DF7EDF8B0033

Exhibit	Description
1073	Microsoft Computer Dictionary, 4th ed., Microsoft Press, 1999 ("Microsoft Dictionary")
1074	STMicrosystems, RM0033 Reference Manual, STM32F205xx, STM32F207xx, STM32F215xx and STM32F217xx advanced ARM-based 32-bit MCUs, Doc ID 15403 Rev 2, December 2010
1075	Joint Claim Construction Statement (Dkt. No. 115), dated December 6, 2023 in *Aptiv Technologies AG, v Microchip Technology Inc.*, Case No. 1:23-cv-00307-JDW (D. Del.)

13. I may use these documents and information, or other information obtained during the course of this proceeding, as well as representative charts, graphs, schematics and diagrams, animations, and models based on those documents and information, to support and to explain my testimony.

14. My opinions are based in part on a review and analysis of the above-mentioned documents and materials. I have also drawn on my education, experience, and knowledge of basic engineering and design principles in forming my opinions.

Microchip Ex. 1013, p. 13
Microchip v. Aptiv
IPR2024-00228

Aptiv Exhibit 2011 Page 13
Microchip v. Aptiv IPR2024-00229

DocuSign Envelope ID: 21006CD8-3A89-44EF-9ECF-DF7EDF8B0033

V. UNDERSTANDING OF THE LAW

A. Legal Standards

15. I am not an attorney, but I have been informed of several legal principles, which I have employed in forming my opinions in this declaration. I have been informed that each patent claim is considered separately for purposes of patentability and that a dependent claim that depends from another claim includes all of the limitations of the claim it depends from.

1. Claim Construction

16. I have been informed that the claims of the Challenged Patent in this proceeding are to be construed using the same claim construction standard applied in district court. I have been informed the claim construction analysis begins with the ordinary meaning of a claim term, and there is a presumption that the term carries its plain and ordinary meaning to a person of ordinary skill in the art ("POSITA") as of the effective filing date of the patent. I have also been informed that the most important sources for determining the meaning of a claim term are the claims, the specification, and the prosecution history of the patent at issue, which collectively is called "intrinsic evidence." I have been further informed that the meaning of a claim term may also be guided by "extrinsic evidence," such as contemporaneous dictionaries, treatises, and industry standards, as well as the testimony of technically skilled witnesses such as myself.

Microchip Ex. 1013, p. 14
Microchip v. Aptiv
IPR2024-00228

Aptiv Exhibit 2011 Page 14
Microchip v. Aptiv IPR2024-00229

DocuSign Envelope ID: 21006CD8-3A89-44EF-9ECF-DF7EDF8B0033

2. Burden of Proof

17. I have been informed that the petitioner in an *inter partes* or *post grant* review bears the burden of establishing unpatentability by "a preponderance of the evidence." I have been further informed and understand that, to prove an assertion by "a preponderance of the evidence," the party with the burden of proof must demonstrate that it is more likely than not that the assertion is true.

3. Anticipation

18. I have been informed that a patent claim is unpatentable if it is "anticipated" by prior art. I have been informed that a reference anticipates a claim if the reference discloses each limitation of the claim at issue, either expressly or inherently. I have been informed that a prior art reference may anticipate a claim without disclosing a feature of the claimed invention if that missing characteristic is necessarily present, or inherent, in the single anticipating reference as would have been understood by a POSITA.

19. I have been informed that material not explicitly contained in a single prior art document may still be considered for purposes of anticipation if that material is incorporated by reference into the document.

4. Obviousness

20. I have been informed that a patent claim is unpatentable if it would have been obvious to a POSITA at the time of the claimed invention. I have been further informed that a claimed invention is not patentable if differences between it and the

Microchip Ex. 1013, p. 15
Microchip v. Aptiv
IPR2024-00228

Aptiv Exhibit 2011 Page 15
Microchip v. Aptiv IPR2024-00229

DocuSign Envelope ID: 21006CD8-3A89-44EF-9ECF-DF7EDF8B0033

prior art are such that the subject matter as a whole would have been obvious at the time the invention was made to a person having ordinary skill in the pertinent art. I have been informed that factors relevant to the determination of obviousness include the scope and content of the prior art, the level of ordinary skill in the art at the time of the invention, differences between the claimed invention and the prior art, and "secondary considerations" or objective indicia of nonobviousness.

21. I have been informed that a single reference alone can render a patent claim obvious, if any differences between the reference and the claim would have been known or obvious to a POSITA at the time of the invention. That is, if the POSITA could have adapted the reference to meet the claims of the patent by applying known concepts to achieve expected results, then the patent claims are rendered obvious by that reference.

22. I have been informed that the combination of familiar elements according to known methods is likely to be obvious when it does no more than yield predictable results. I have been further informed and understand that when a patent claim simply arranges old elements with each performing the same function it had been known to perform, and yields no more than one of ordinary skill would expect from such an arrangement, the combination is obvious.

23. I have been informed that a patent claim composed of several limitations is not obvious merely because each limitation was independently known

Microchip Ex. 1013, p. 16
Microchip v. Aptiv
IPR2024-00228

Aptiv Exhibit 2011 Page 16
Microchip v. Aptiv IPR2024-00229

DocuSign Envelope ID: 21006CD8-3A89-44EF-9ECF-DF7EDF8B0033

in the prior art. Hindsight reasoning is not an appropriate basis for combining references to form an obviousness combination. I have been further informed that it can be important to identify a reason that would have prompted a POSITA to combine multiple prior art references, or multiple teachings of the same prior art reference.

24. I have been informed that various "secondary considerations" (sometimes referred to as objective indicia of nonobviousness) may support a determination of nonobviousness and that such secondary considerations must be considered as part of an obviousness analysis. I have been informed that even strong evidence of secondary considerations may not be sufficient to rebut a strong showing of obviousness. I have been informed that the patentee bears the burden of showing the existence and effect of secondary considerations of nonobviousness, after which the burden of coming forward with rebuttal evidence shifts to the party arguing obviousness. I have been informed that the following secondary considerations may indicate nonobviousness:

25. ***Copying***: evidence that others, including the accused infringer, copied the patented invention.

26. ***Long-standing problem or need***: evidence of a persistent problem or need in the art that was resolved by the patented invention.

Microchip Ex. 1013, p. 17
Microchip v. Aptiv
IPR2024-00228

Aptiv Exhibit 2011 Page 17
Microchip v. Aptiv IPR2024-00229

DocuSign Envelope ID: 21006CD8-3A89-44EF-9ECF-DF7EDF8B0033

27. ***Prior failure***: evidence that others have tried and failed to solve the problem or failed to provide the need resolved by the claimed invention.

28. ***Commercial acquiescence of competitors***: the willingness of industry to license the patent at issue.

29. ***Skepticism***: evidence that those of ordinary skill in the art were skeptical as to the merits of the invention.

30. ***Praise***: evidence of praise directed to an invention by others in the field.

31. ***Unexpected results***: evidence that those of ordinary skill in the art were surprised by the capabilities of the claimed invention.

32. I have also been informed that the ***near-simultaneous invention*** by others can be evidence that a claimed invention is obvious.

33. I have further been informed that the patentee bears the burden of showing a "nexus" between the claimed invention and the evidence proffered on secondary considerations (*e.g.*, proof of commercial success of a product that practices the claimed invention is not enough; there must be evidence that the commercial success resulted, at least in part, from the claimed invention).

5. Legal Standard for Invalidity Based on Written Description and Enablement Under 35 U.S.C. § 112 ¶1

34. I understand that a patent claim is invalid for lack of written description under 35 U.S.C. § 112 ¶1 if the specification does not "*contain a written description of the invention, and of the manner and process of making and using it, in such full,*

Microchip Ex. 1013, p. 18
Microchip v. Aptiv
IPR2024-00228

Aptiv Exhibit 2011 Page 18
Microchip v. Aptiv IPR2024-00229

DocuSign Envelope ID: 21006CD8-3A89-44EF-9ECF-DF7EDF8B0033

clear, concise, and exact terms as to enable any person skilled in the art to which it pertains, or with which it is most nearly connected, to make and use the same."

35. This requirement has two parts: (1) the specification must describe the invention, and (2) the originally-filed specification and claims must describe the manner and process of making and using the invention.

36. I also understand that the written description must include every feature or limitation of the claimed invention.

37. I further understand that the written description must convey clearly to those skilled in the art that, as of the priority date sought, the inventor was in possession of the invention claimed.

38. I understand that, in conducting a written description analysis:

- The written description analysis is based on an objective inquiry into the four corners of the specification.
- This inquiry into the specification is done from the perspective of one of ordinary skill in the art.
- The written description requirement does not require any particular form of disclosure, and support may be based on a combination of figures and disclosures throughout the specification.

Microchip Ex. 1013, p. 19
Microchip v. Aptiv
IPR2024-00228

Aptiv Exhibit 2011 Page 19
Microchip v. Aptiv IPR2024-00229

DocuSign Envelope ID: 21006CD8-3A89-44EF-9ECF-DF7EDF8B0033

- The specification need not recite the claimed invention in haec verba, *i.e.*, it need not use the same words, phrasings or presentation style as the claims.
- A description that merely renders the invention obvious does not satisfy the written description requirement.
- The level of detail required to satisfy the written description requirement depends on (i) the nature and scope of the claims and (ii) the complexity and predictability of the relevant technology.
- Factors to be taken under consideration include the existing knowledge in the particular field, the extent and content of the prior art, the maturity of the science or technology, and the predictability of the aspect at issue.

39. I understand that lack of written description must be proven by clear and convincing evidence.

40. I understand that the written description requirement must be shown with respect to the full scope of the claims, *e.g.*, that the inventor had possession of the full scope of the claims.

Microchip Ex. 1013, p. 20
Microchip v. Aptiv
IPR2024-00228

Aptiv Exhibit 2011 Page 20
Microchip v. Aptiv IPR2024-00229

DocuSign Envelope ID: 21006CD8-3A89-44EF-9ECF-DF7EDF8B0033

6. Indefiniteness

41. I understand that for a patent claim to be valid under 35 U.S.C. § 112, the patent claim must particularly point out and distinctly claim the subject matter which the applicant regards as his or her invention. I understand that a patent claim must be sufficiently clear that, by reading the patent claim, a POSITA of the invention is able to determine what the claim covers and what it does not cover. I understand that the standard for determining compliance is that the patent claim, read in light of the specification and the prosecution history from the perspective of one of ordinary skill in the art, must inform with reasonable certainty those of ordinary skill in the art as to the claim scope—that is, the scope of the invention. I further understand that if a patent claim does not meet this requirement, then the claim is said to be indefinite, and the claim is invalid under 35 U.S.C. § 112.

42. I am informed and understand that a claim can be found unpatentable due to the prior art (*i.e.*, anticipated or obvious) in certain circumstance even if the claim is indefinite. One example is where the outer bounds of a claim limitation are not reasonably certain, but the prior art disclosure falls within the scope of the limitation that is not subject to uncertainty.

B. Priority Date

43. I have been informed that a U.S. patent may claim "priority" to the filing date of one or more earlier filed applications. I have been informed that the

Microchip Ex. 1013, p. 21
Microchip v. Aptiv
IPR2024-00228

Aptiv Exhibit 2011 Page 21
Microchip v. Aptiv IPR2024-00229

DocuSign Envelope ID: 21006CD8-3A89-44EF-9ECF-DF7EDF8B0033

priority date, also called the "effective filing date," is the earliest filing date to which a claim is entitled—and that such date is relevant for determining what qualifies as prior art. I understand that a claim must have written description support in the application(s) to which it claims priority to be entitled to an earlier effective filing date. I have been informed that the priority date determination is done on a claim-by-claim basis, and that claims in the same patent may have different priority dates.

44. I have been instructed to use September 26, 2013 as the priority date for all of the challenged claims of the Challenged Patents except for certain claims of the '962 patent. Specifically, for claims 11-13 and 18-19 of the '962 patent (which relate to power delivery), I have been instructed to use September 6, 2016 as the priority date.

C. Level of Skill in the Art

45. I have been informed that the level of ordinary skill in the relevant art at the time of the invention is relevant to inquiries such as the meaning of claim terms, the meaning of disclosures found in the prior art, and the reasons one of ordinary skill in the art may have for combining references.

46. I have been informed that factors that may be considered in determining the level of ordinary skill include: (1) the type of problems encountered in the art; (2) prior art solutions to those problems; (3) rapidity with which innovations are made; (4) sophistication of the technology; and (5) education level of active workers

Microchip Ex. 1013, p. 22
Microchip v. Aptiv
IPR2024-00228

Aptiv Exhibit 2011 Page 22
Microchip v. Aptiv IPR2024-00229

DocuSign Envelope ID: 21006CD8-3A89-44EF-9ECF-DF7EDF8B0033

in the relevant field. I have been further informed that a POSITA is also a person of ordinary creativity.

47. The Challenged Patents pertain generally to the field of USB connectivity (*e.g.*, USB systems/architectures/communications), though other technical fields may be relevant. *See* EX1003 ('037 patent), 1:17-19. A POSITA at the time of the alleged invention would have been well-versed in USB standards (including the USB 2.0 and 3.0 Specifications and the OTG Supplement) and the design/deployment of USB hosts (including embedded hosts), USB devices, and USB hubs (including embedded Hubs),[1] including suitable environments for USB systems. A POSITA would also have had a working understanding of network/communication architectures (*e.g.*, client/server) and components (*e.g.*, host-to-host bridges), computer hardware and peripherals, computer programming, and the design/implementation of communication software/firmware/drivers in standard operating systems (*e.g.*, Windows, MacOS and Linux) and embedded systems. A POSITA would have had at least a four-year degree in electrical engineering, computer engineering, computer science, or a related field and four years of experience designing USB systems, including USB hosts, USB hubs, and

[1] For the '962 patent that has a later priority date, a POSITA would also have been well-versed in the USB-C Connector Specification and the USB-PD Specification.

Microchip Ex. 1013, p. 23
Microchip v. Aptiv
IPR2024-00228

Aptiv Exhibit 2011 Page 23
Microchip v. Aptiv IPR2024-00229

DocuSign Envelope ID: 21006CD8-3A89-44EF-9ECF-DF7EDF8B0033

USB devices. A relevant advanced degree may substitute for some work experience. Similarly, relevant work experience may substitute for formal education.

48. I was at the time of the alleged invention at least a POSITA in the art relevant to the Challenged Patents. Further, based on my experience, I understand and know of the capabilities of a POSITA in 2013 (and in 2016 for certain claims of the '962 patent)—and I am familiar with how a POSITA would have understood and used the terminology found in the Challenged Patents at the time of filing, and with the state of the art at that time.

49. Even though my own experience and qualifications exceed that of a POSITA, the statements herein regarding the knowledge of a POSITA and what would have been obvious to a POSITA are from the perspective of POSITA at the relevant priority date. *See* §V.B.

VI. TECHNOLOGY BACKGROUND

50. I will first provide background on the context of the Challenged Patents. Because the specification of the Challenged Patents is written in the context of various Universal Serial Bus ("USB") specifications, standards and products that follow those standards, I provide a tutorial relating to the knowledge of a POSITA in these subject matter areas below.

Microchip Ex. 1013, p. 24
Microchip v. Aptiv
IPR2024-00228

Aptiv Exhibit 2011 Page 24
Microchip v. Aptiv IPR2024-00229

DocuSign Envelope ID: 21006CD8-3A89-44EF-9ECF-DF7EDF8B0033

A. USB Basics

51. USB ("Universal Serial Bus") has been a ubiquitous technology for connecting host computers and peripherals since the mid-1990s. It was initially conceived to improve the end user's experience by replacing and standardizing the peripheral ports (*e.g.*, serial, parallel, and other ports), some of which were proprietary. Additional motivation included:

- Improve performance
- Provide power
- Reduce the number of ports
- Support hot plug and unplug
- Provide for standard and inexpensive cables

52. USB was standardized by a group (called the Promoter's Group) of major companies in the computer industry, some of whom were competitors. This was the USB-IF ("USB Implementors Forum"). The promoters were motivated by the idea that standardizing the computer/peripheral interface was in everybody's best interest, provided a high-quality user experience and importantly, left considerable room for innovation and competitive advantage. The USB 1.0 specification (January 1996) outlined the overall architecture, set out requirements for mechanical and electrical details including cables and new connectors, and defined two communication speeds: Low (1.5 Mbps (megabits per second)) and Full (12 Mbps).

Microchip Ex. 1013, p. 25
Microchip v. Aptiv
IPR2024-00228

Aptiv Exhibit 2011 Page 25
Microchip v. Aptiv IPR2024-00229

DocuSign Envelope ID: 21006CD8-3A89-44EF-9ECF-DF7EDF8B0033

53. The USB 2.0 specification was published in April of 2000, cleaned up some details, and added High Speed communications (480 Mbps). EX1018. The USB 2.0 specification clarified the practice of backwards compatibility with earlier specifications. High Speed capable devices were required to work on Full Speed systems, etc. Cables that had been created in strict adherence to the 1.0 specification (not all were) would work at High Speed. Through USB 2.0 all data speeds used a single balanced wire pair (called D+ and D-), although at different voltage levels for the different speeds.

54. The USB 3.0 Specification, which was also backwards compatible with the earlier USB versions, was published in November 2008, adds higher speeds, but "*has similar architectural components as USB 2.0*." EX1023, §3.1; *see also id.*, §3 ("*USB 3.0 … provides backward compatibility with USB 2.0*.").

1. Hosts and Devices

55. USB Products and subsystems[2] come in two types: USB Host (or just "host") and USB Device (or just "device"). In general, the host manages the connection, and it "instantiates" the device by connecting it electrically and through the software protocol stack to the rest of the system. USB devices are divided into

[2] Some literature uses the term "device" generically, referring to products that may operate as a USB device, a USB host, or both.

Microchip Ex. 1013, p. 26
Microchip v. Aptiv
IPR2024-00228

Aptiv Exhibit 2011 Page 26
Microchip v. Aptiv IPR2024-00229

DocuSign Envelope ID: 21006CD8-3A89-44EF-9ECF-DF7EDF8B0033

classes (*e.g.*, mice, keyboard, game controllers, printers, storage devices, network adapters, other communication devices, vendor specific, etc.). The USB host is responsible for providing the right software device driver for the specific device. The host operating system vendor usually provides the overall control software for USB and all or most of the class drivers. When communication starts, the host is responsible for both sending data to the device and "polling" the device (in USB 2.0) to query it for information. Over this framework the individual device class driver manages the communication in whatever way makes most sense for its specific requirements.

56. The USB 2.0 Specification contemplates "*only one host in any USB system*." EX1018, §4.1.1.1. In the simplest configuration (*e.g.*, without a hub, *see infra*), one USB host (*e.g.*, personal computer) connects to one USB device (*e.g.*, keyboard):

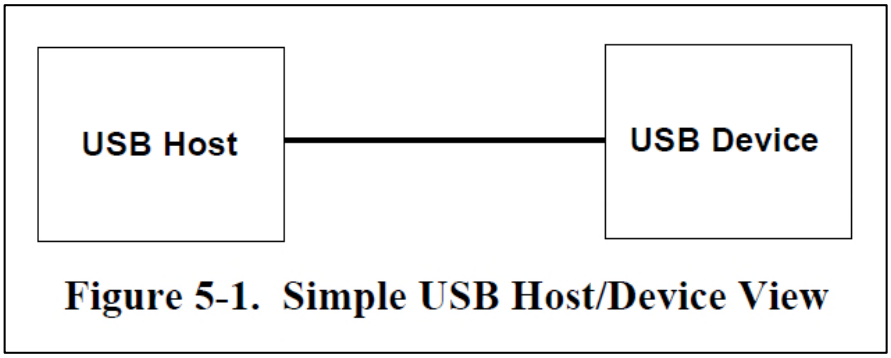

Id., Fig. 5-1.

Microchip Ex. 1013, p. 27
Microchip v. Aptiv
IPR2024-00228

Aptiv Exhibit 2011 Page 27
Microchip v. Aptiv IPR2024-00229

DocuSign Envelope ID: 21006CD8-3A89-44EF-9ECF-DF7EDF8B0033

57. Under the USB 2.0 specification (EX1018) host/device detect and connect has been designed to be simple and deterministic. The device sees the host VBUS and turns on its speed resistor (1.5k pull-up resistor). The host is not driving either data line yet and sees a positive voltage indicating a potential device connect. The host starts the "instantiation" process by first setting the bus address of the device and reading the "device descriptors" to get the device Model Name, Manufacturer, serial number, and USB class and subclass, among other things. Instantiation is completed by matching a device driver (provided either by the host manufacturer (*e.g.*, Microsoft, Apple, Linux, Android, etc.) or by the device manufacturer in the case of "vendor specific" device) thereby connecting the USB device to the rest of the system as appropriate for the function of the device as provided by a combination of the device hardware and device driver.

58. Once connected a host and device can disconnect electrically without having to physically disconnect plug and receptacle. The host can disconnect by turning off VBUS and tri-stating its data lines. The device can disconnect by turning off its speed resistor.

59. With the publication of the USB OTG and Embedded Host supplement (EX1022) these processes became more generalized. VBUS is not always supplied, and even when it is it is sometimes just a logic signal indicating that that the counterpart device is connected. Also, OTG allows host and device to swap roles

Microchip Ex. 1013, p. 28
Microchip v. Aptiv
IPR2024-00228

Aptiv Exhibit 2011 Page 28
Microchip v. Aptiv IPR2024-00229

DocuSign Envelope ID: 21006CD8-3A89-44EF-9ECF-DF7EDF8B0033

(but there still remains only one product as the host) such that the device instead of the host can supply VBUS. The OTG supplement generally assumes that VBUS is on during an active USB session. In practice this is not always the case, especially with dual-role devices.

60. The later publication of the USB 3.x, USB-PD, and USB-C specifications generalized these functions even further.

61. Well before 2013 (the priority date of the Challenged Patents), other USB configurations (with additional devices and/or hosts) were well-known. *See infra* §VI.A.2 (hubs) and §VI.C (bridges).

62. The terms "master" and "slave" are sometimes used in the technical vernacular and in some patents (*e.g.*, Chang II, *see infra*). Although these terms are not used in the USB-IF specifications, they are easily understood by POSITA: a USB host is a master and a USB device is a slave. EX1073, 3 ("*Slave*" definition: "*Any device, including a computer, that is controlled by another computer, referred to as the master*.").

63. The convention of characterizing USB communication as "commands" being sent from a host to a device or between two hosts is not uncommon and would be understood by a POSITA. However, a POSITA would have understood that at the electrical signal and "link" level, all USB communication is bidirectional. Generally, the USB host "polls" (in USB 2.0) the device endpoints and the USB

Microchip Ex. 1013, p. 29
Microchip v. Aptiv
IPR2024-00228

Aptiv Exhibit 2011 Page 29
Microchip v. Aptiv IPR2024-00229

DocuSign Envelope ID: 21006CD8-3A89-44EF-9ECF-DF7EDF8B0033

device responds with either data or an indication of no data, so that every poll receives some response. At the higher protocol layers, the communication details are dictated by the class definition, for example a HID device like a keyboard mostly sends data from the device to the host. A USB printer device mostly receives data from the USB host. USB comm class devices send data in both directions.

64. From its first introduction, USB power ("VBUS") was used not only to power USB devices, but also used to power and charge devices that had nothing else to do with USB. Even though this use was not explicitly covered in the original specification, the USB-IF reacted and created the first of several specifications for power and battery charging.

2. USB Hubs

65. USB hubs are fundamental to USB architecture. *See* EX1018, Chapter 11 ("*Hub Specification*"). The USB 2.0 Specification defines the term "*hub*" as a "*USB device that provides additional connections to the USB*." *Id.*, 34. A typical hub is shown below:

Microchip Ex. 1013, p. 30
Microchip v. Aptiv
IPR2024-00228

Aptiv Exhibit 2011 Page 30
Microchip v. Aptiv IPR2024-00229

DocuSign Envelope ID: 21006CD8-3A89-44EF-9ECF-DF7EDF8B0033

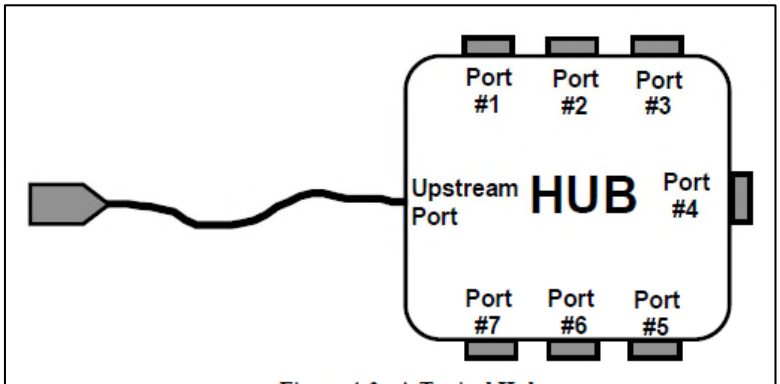

Figure 4-3. A Typical Hub

Id., Fig. 4-3. The hub's attachment points are called "ports." *Id.*, 36, 50. "*The upstream port of a hub connects the hub towards the host.*" *Id.*, 50. The remaining hub ports are "downstream" ports for connecting USB products. *Id.*, 33. More specifically, hubs have one upward facing port ("UFP") and two or more downward facing ports ("DFP") (shown above as Port #1-7).[3] Hubs support the simultaneous connection of multiple devices to one host. That is, "*[i]n the downstream direction, hubs operate in a broadcast mode*" (*id.*, §11.1.2.1), such that the upstream host communications are sent to all downstream ports with corresponding connections to downstream devices (*id.*). *See also id.*, 33, 38. USB 2.0 Specification Fig. 11-2 (below) shows both "downstream" (left) and "upstream" (right) communications.

66. As shown below in EX1018, Fig. 11-2 ("*Hub Signaling Connectivity*"), HUBs typically broadcast data from the UFP to the DFPs.

[3] In this declaration, I will often refer to these as upstream and downstream ports.

Microchip Ex. 1013, p. 31
Microchip v. Aptiv
IPR2024-00228

Aptiv Exhibit 2011 Page 31
Microchip v. Aptiv IPR2024-00229

DocuSign Envelope ID: 21006CD8-3A89-44EF-9ECF-DF7EDF8B0033

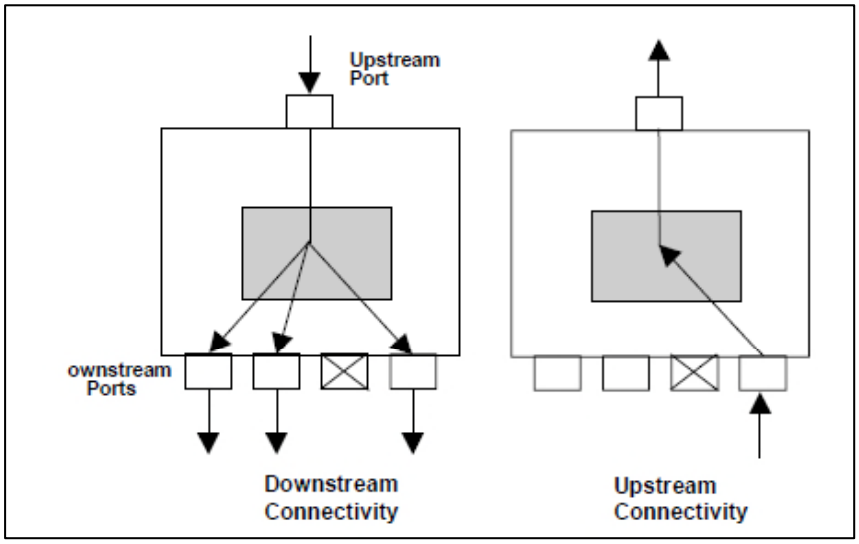

67. There is a special case where the UFP does not broadcast to all DFPs. Specifically, when the UFP operates at High Speed and one or more DFPs operate at full or low speed, data is not always from the UFP to the downstream DFPs that operate at different speeds. SuperSpeed Hubs don't broadcast SuperSpeed UFP data to the downstream ports.

68. Hubs can be self-powered (often with an external power brick or adapter (*i.e.*, wall wart) or battery) or bus powered (operating from the VBUS connection on the UFP). Hubs can be plugged into one another to create a complex tree with the USB host at the root and USB devices as the leaves.

Microchip Ex. 1013, p. 32
Microchip v. Aptiv
IPR2024-00228

Aptiv Exhibit 2011 Page 32
Microchip v. Aptiv IPR2024-00229

DocuSign Envelope ID: 21006CD8-3A89-44EF-9ECF-DF7EDF8B0033

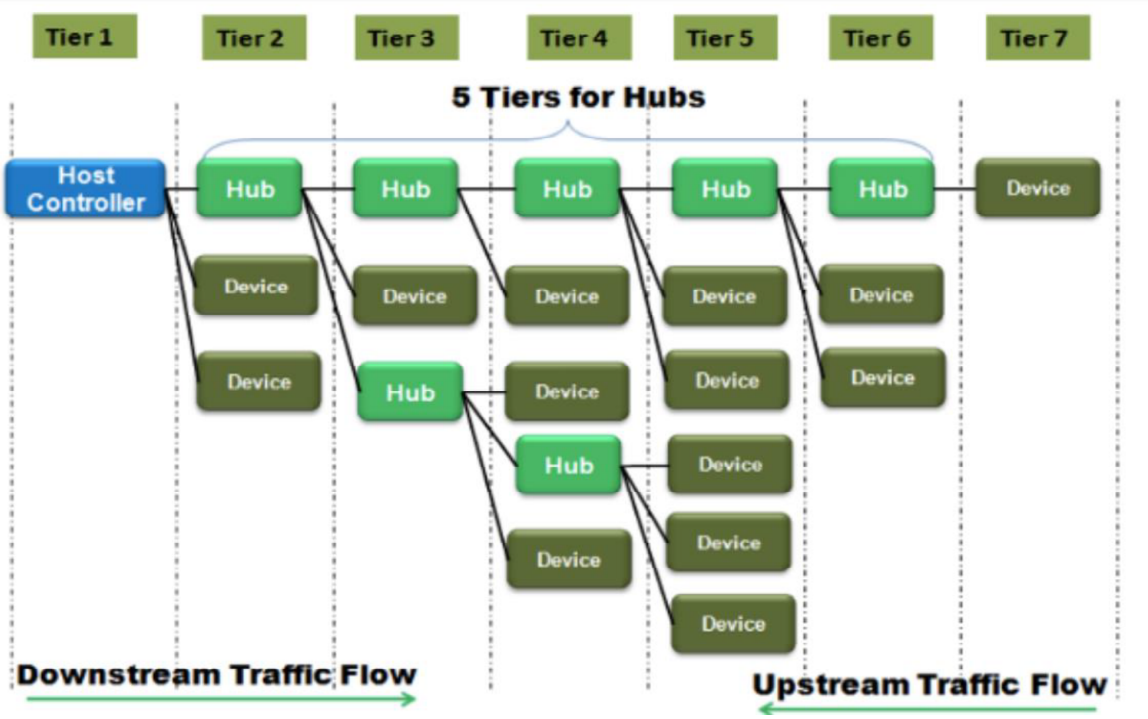

B. Dual-Role Products

69. The earliest versions of USB did not standardize the use of dual-role devices. EX1025 (Castleberry), 1:21-24 ("*When the USB standard was developed, it was assumed that the Host and Device functions were separate and permanent, meaning that a Host unit could never function as a Device unit and vice versa*."). The USB-IF, however, became interested in standardizing dual-role operation and developed the USB On-The-Go ("OTG") supplement (version 1.0 published in December 2001 and version 2.0 published in May 2009, EX1022), defining how two devices could connect and negotiate their individual roles between USB Host and USB Device.

Microchip Ex. 1013, p. 33
Microchip v. Aptiv
IPR2024-00228

Aptiv Exhibit 2011 Page 33
Microchip v. Aptiv IPR2024-00229

DocuSign Envelope ID: 21006CD8-3A89-44EF-9ECF-DF7EDF8B0033

70. Various Android smartphones included dual-role USB via a Micro-USB connector in the 2012-2013 timeframe. Some examples include:

- Samsung Galaxy S4 (released April 2013) (https://web.archive.org/web/20130701223742/http://www.gsmarena.com/samsung_i9500_galaxy_s4-5125.php) EX1065, 10-12;
- Nexus 7 (released July 2013) (https://web.archive.org/web/20130813011121/https://www.gsmarena.com/asus_google_nexus_7_2_2013-review-964p8.php) EX1065, 4-6; and
- Acer Iconia Tab A210 (released November 2012). (https://web.archive.org/web/20130620152516/http://www.gsmarena.com/acer_iconia_tab_a210-5066.php) EX1065, 7-9.

71. These devices used a mechanism taken from the OTG supplement, that of the "ID" pin on the micro-USB connector to determine the role of an attached device. The Micro-A plug has its ID pin connected to Ground and indicates that the attached is a USB Device. The Micro-B plug has its ID pin floating and indicates that the attached is a USB Host. EX1070 (USB Micro-USB Cables and Connectors Specification, Revision 1.01 April 4, 2007), 10. *See also* https://developer.android.com/develop/connectivity/usb, and https://www.javatpoint.com/android-versions.

DocuSign Envelope ID: 21006CD8-3A89-44EF-9ECF-DF7EDF8B0033

72. Well before 2013 (the priority date of the Challenged Patents), dual-role products became ubiquitous. EX1016 (Overtoom), Abstract (discussing "*dual-role devices (OTG devices)*"); EX1032 (Wurzburg), [0007] (discussing "*dual role peripheral devices*" such as "*dual role USB printer*"), [0052] ("*dual role USB Digital Versatile Disc (DVD) read/write drive, among others*."), and [0102]; EX1033 (Bohm '885), [0040].

73. Certain consumer devices (*e.g.*, smartphones, PDAs, etc.) are not only dual role, but have the capability to switch roles dynamically. For example, EX1025 (Castleberry) explains that "*USB unit 202 can be configured to switchably alternate, in a dynamic fashion, between the Host mode and the Device mode. Such might be the case, for example, when one of the devices is a portable device, such as a PDA or hand-held device, whose role may change*." 4:17-22; *see also* EX1032 (Wurzburg), [0052] (describing "*dual role peripheral device 207*" which "*may simultaneously act as a host to one or more peripheral devices and/or as slave peripheral device to a separate host*"); EX1066 (Dunstan), 5:25-28 ("*In some embodiments, the host operating as the host and the host operating as the device can be dynamically swapped using hardware and/or software at one or both of the hosts*."). The USB-IF later formalized dynamic role switching in the USB Power Delivery Specification. EX1020, §6.3.9 ("*DR_Swap Message*"). However, prior to this standard, a variety of schemes were adopted including the in-band method

Microchip Ex. 1013, p. 35
Microchip v. Aptiv
IPR2024-00228

Aptiv Exhibit 2011 Page 35
Microchip v. Aptiv IPR2024-00229

DocuSign Envelope ID: 21006CD8-3A89-44EF-9ECF-DF7EDF8B0033

sending of a particular control message, or out of band schemes involving, for example, the ID signal on the Micro-USB connector. *See* ¶71 and ¶84.

1. Host/Device Detection

74. A dual-role USB product is supported by a dual-role port (*i.e.*, a port that can accept a connection to either a host or device). Having to have dedicated ports "*add[ed] overhead and increase[d] the cost associated with devices that are implemented with both Host and Device functionality*." EX1025 (Castleberry), 1:41-43. A dual-role port requires detection circuitry that determines whether the connecting product is in host or device mode. As I discuss below, this detection circuitry was well known, and was available in various forms. *E.g.*, *id.*, 7:30-52 (describing various "*suitable way[s]*" to detect downstream USB products, including the monitoring of the USB data and power lines).

75. USB hosts and USB hub DFPs electrically identify themselves with 15k pull down resistors on D+ and D-. This is outlined in chapter 7 of the USB 2.0 Specification which defines electrical characteristics for host and device connections. *See* EX1018, §7.1. In particular, an upstream host must have 15kΩ pull-down resistors on the D+/D- data line. *See id.*, §7.1.1.3 ("*On downstream facing ports, R_{PD} resistors (15kΩ ±5%) must be connected from D+ and D- to ground*."); §7.1.5.1 ("*The pull-down terminators on downstream facing ports are resistors of 15 kΩ [] connected to ground*."). In contrast, a USB device must have

Microchip Ex. 1013, p. 36
Microchip v. Aptiv
IPR2024-00228

Aptiv Exhibit 2011 Page 36
Microchip v. Aptiv IPR2024-00229

DocuSign Envelope ID: 21006CD8-3A89-44EF-9ECF-DF7EDF8B0033

a 1.5kΩ pull-up resistor on one terminal of the data line. *Id*. ("*Full-speed devices are terminated as shown in Figure 7-20 with the pull-up resistor on the D+ line. Low-speed devices are terminated as shown in Figure 7-21 with the pull-up resistor on the D- line*."). Fig. 7-21 is shown below, with the upstream host's 15kΩ pull-down resistors (R_{pd}) and the downstream device's 1.5kΩ pull-up resistor (R_{pu}) identified.

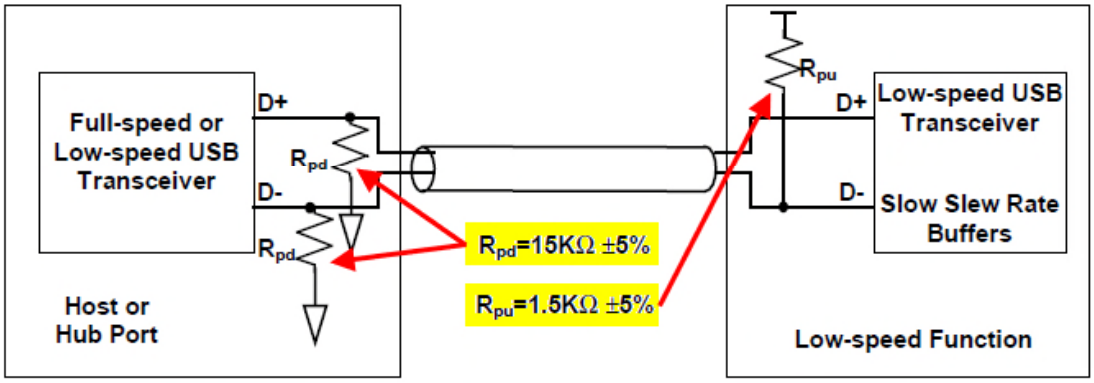

Figure 7-21. Low-speed Device Cable and Resistor Connections

EX1018, Fig. 7-21 (annotated).

76. It was well-known to POSITAs circa 2013 that detecting the presence/values of the resistors using, *e.g.*, a voltage divider, indicated whether a host or device was connected. Some examples that illustrate this are in the following paragraph.

77. *See, e.g.*, EX1042 (Bohm '759), [0006] ("*A connection between the USB device and the host may include four wires (a power line, a ground line, and a*

Microchip Ex. 1013, p. 37
Microchip v. Aptiv
IPR2024-00228

Aptiv Exhibit 2011 Page 37
Microchip v. Aptiv IPR2024-00229

DocuSign Envelope ID: 21006CD8-3A89-44EF-9ECF-DF7EDF8B0033

pair of data lines (D+ and D-). When a USB device connects to the host, the USB device may first pull a D+ line high (the D- line if the device is a low speed device) using a pull up resistor on the D+ line."); EX1025 (Castleberry), 7:30-40 ("*Step 500 determines whether a USB unit is to operate in a Host or a Device mode. This step can be performed in any suitable way. For example, ... the USB unit can passively monitor the signaling which another USB unit presents on VBUS, D+, and D- after the USB cable is connected, determine if the other USB unit is acting as a Host or Device*."); EX1033 (Bohm '885), [0009] ("*In some embodiments, the USB hub may automatically detect the switching condition. For example, the USB hub may have a sensing mechanism, e.g., present in the physical layer (PHY) of connections to the USB hub, specifically for detecting the switching condition. In one embodiment, the switching condition may include a change of impedance in one or more pins of one of the connections to the USB hub, e.g., one or more of the ports. For example, in one embodiment, the invoked switching condition, e.g., via the means described above, may include a change in impedance on the D+ and D-pins of the USB cable, e.g., connected to the peripheral device that is requesting logic reversal. As a specific example, normally two of the pins in the PHY may have an impedance of 15 kOhms, and after tying, for example, two pins together, the impedance may decrease to 7.5 kOhms. Correspondingly, the USB hub may detect this change in impedance*

Microchip Ex. 1013, p. 38
Microchip v. Aptiv
IPR2024-00228

Aptiv Exhibit 2011 Page 38
Microchip v. Aptiv IPR2024-00229

DocuSign Envelope ID: 21006CD8-3A89-44EF-9ECF-DF7EDF8B0033

as the switching condition. Thus, the USB hub may receive input invoking a switching condition indicating a change in logic in the hub.").

78. After VBUS is applied, USB Devices identify themselves with a "speed resistor" on D+ in the case of Full-speed and High-Speed Devices. The OTG protocol SRP (*see* ¶8080) allows a USB Device to identify itself and request a connection by pulsing its speed resistor without VBUS being on.

79. Without OTG, a dual-role port could detect if something connected is a USB Host or a USB Device. *E.g.*, EX1032 (Wurzburg), [0005] (explaining use of data line for host/device detection). First, keeping VBUS off, the dual-role port could look for the 15k pull-down resistors of a USB Host by using a voltage divider (EX1069, 17) and measuring the voltage at the center tap with a Field Effect Transistor when the on case yields a logic true voltage, with a comparator (*id.*, 31, Fig. C, "window discriminator"), an A/D converter (*id.*, 28-30) or some other means. If it is a USB Host, then the dual role port would take the Device role and turn on its 1.5K speed resistor. If it is not a USB Host, then the dual-role port would turn on its 15k pull down resistors, turn on VBUS and check for a 1.5k speed resistor. EX1018, §7.1.5 ("*Device Speed Identification*").

80. This use of resistors can be thought of as producing signals on the data lines that a detection circuit detects. For example, Chang II discloses a "*detection unit 134*" for detecting whether the consumer product is host or device. EX1015

Microchip Ex. 1013, p. 39
Microchip v. Aptiv
IPR2024-00228

Aptiv Exhibit 2011 Page 39
Microchip v. Aptiv IPR2024-00229

DocuSign Envelope ID: 21006CD8-3A89-44EF-9ECF-DF7EDF8B0033

(Chang II), [0038]. The detection unit determines the connection of either a host or device by (1) sending an "*inquire signal*" and receiving a response (*e.g.*, sees VBUS input and/or zero on the data lines as a result of the 15k pull-downs when a host connects) or (2) receiving an "*inquire signal*" (*e.g.*, see the 1.5k pull-up resistor after applying VBUS output when a device connects). *Id.*, [0038]-[0040]. Another example of this signaling is the "*Session Request Protocol*" (SRP) under the OTG Supplement (EX1022, §5.1). This is a scheme whereby an OTG B-device (the OTG term for USB device) pulses its pull-up speed resistor to indicate (*i.e.*, "*Inquire signal*") that it wants to attach as a USB Device and requesting that the host (*i.e.*, dual-role port in this context) turn on VBUS and start operation as a USB Host. While "inquire signal" is not a common term, this technique simply refers to the use of signaling, such as with pull-up or pull-down resistors.

81. With OTG, it was also well-known to POSITAs by 2013 that, in OTG implementations, the physical connector and a "ID Pin" may be used to ascertain host/device status. *See* EX1022, §4.2.4 and EX1070, 10. Additionally, with OTG, a dual-role port can determine the host or device role of the attached object in a variety of ways. Although OTG devices are supposed to use a Micro-A/B USB connector (EX1022, §3.1.1), the OTG Supplement offers a wide variety of mechanisms for Hosts and Devices, with and without power to detect one another and determine the Host/Device roles. One example is the use of the ADP protocol.

Microchip Ex. 1013, p. 40
Microchip v. Aptiv
IPR2024-00228

Aptiv Exhibit 2011 Page 40
Microchip v. Aptiv IPR2024-00229

DocuSign Envelope ID: 21006CD8-3A89-44EF-9ECF-DF7EDF8B0033

Id., §5.4 (Attach Detection Protocol). ADP is used when VBUS is off and works by measuring the capacitance between VBUS and ground by applying a known small voltage intermittently, measuring the VBUS voltage during the applied voltage "off" time and by counting the time required for VBUS to reach a certain voltage. The capacitance can be calculating from the RC time constant including charging voltage, the series resistance of the voltage source and the time:

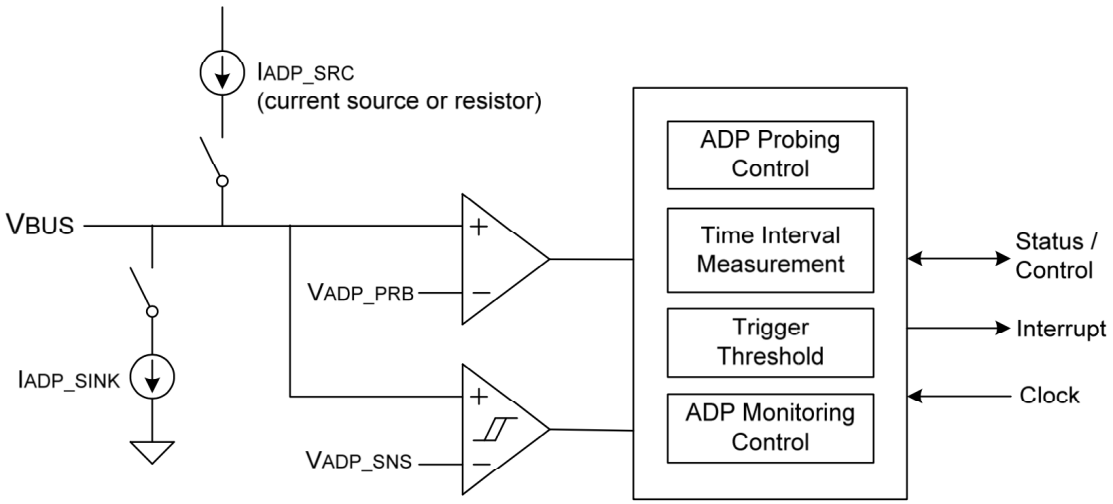

Figure 5-5: ADP Architecture

EX1069, §1.13.

82. Regardless of what connectors are used, a dual-role port could use ADP sensing/ADP probing to determine the role of the counterpart object. If ADP sensing detects ADP probing from the other side, then a Host is attached, otherwise by applying an ADP probe and measuring the capacitance and noting that downstream facing (*i.e.* Host) ports have much higher capacitance (10 uF-120 uF) as compared

Microchip Ex. 1013, p. 41
Microchip v. Aptiv
IPR2024-00228

Aptiv Exhibit 2011 Page 41
Microchip v. Aptiv IPR2024-00229

DocuSign Envelope ID: 21006CD8-3A89-44EF-9ECF-DF7EDF8B0033

to Upstream (*i.e.* Device) ports with 1 uF-10 uF, the type can be determined. EX1022, §5.4 ("*Attach Detection Protocol*").

83. A POSITA would have understood that the implementation of a device type detection circuit could be done with discrete components or in an integrated circuit (IC) or System on Chip (SOC).

84. An in-band scheme for switching the host/device role is the USB OTG Host Negotiation Protocol (HNP). EX1022, §6.3. This mechanism defines a new USB descriptor for a USB device to opt-in to this scheme. An interrupt endpoint is dedicated to HNP status and polled periodically by the host. The device can set a bit in this periodic status message which will cause the host to suspend the bus and allow the device to take over the host role.

85. An Android product with a micro-USB connector can affect a dynamic mode switch by electrically detaching from the USB (¶58) and then changing the ID pin to the required state (floating for an attached host, ground for device) and reasserting the appropriate pull-up or pull-down resistors. If attached device is selected, Android will also turn on VBUS. *See* https://developer.android.com/develop/connectivity/usb.

86. Another example of a dual-role product is the STM32F2, a microcontroller released in 2010 by STMicrosystems. It has two USB ports each of which is dual-role and can support connection to either a host or device, with or

Microchip Ex. 1013, p. 42
Microchip v. Aptiv
IPR2024-00228

Aptiv Exhibit 2011 Page 42
Microchip v. Aptiv IPR2024-00229

DocuSign Envelope ID: 21006CD8-3A89-44EF-9ECF-DF7EDF8B0033

without OTG. STMicrosystems consulted me in the design of this product. The following image is from RM0033 Reference Manual STM32F2xx, April 2011, a publicly available document from prior to 2013 that I had kept in my files.

29.4 OTG dual role device (DRD)

Figure 344. OTG A-B device connection

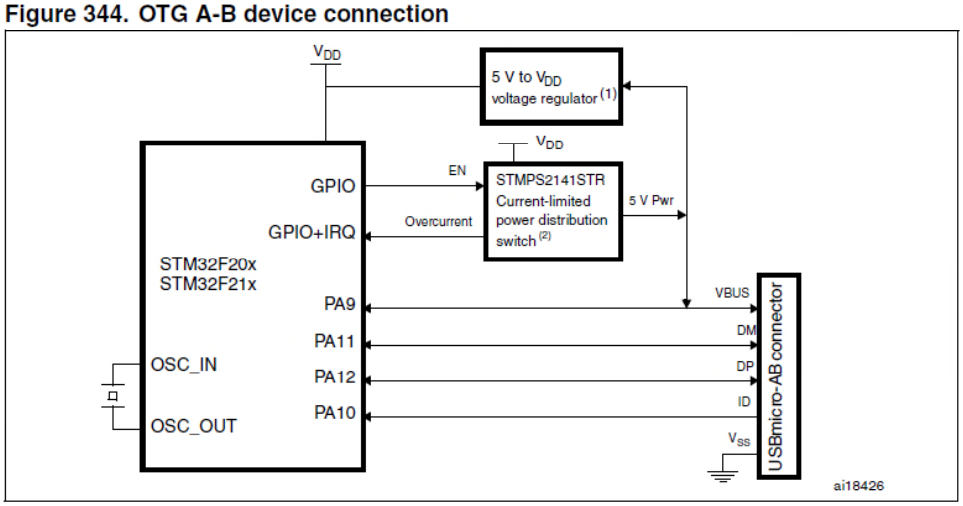

EX1074, 922.

87. As with the OTG Supplement, the STM32F2 product offered developers a wide variety of tools that can be separately selected and configured according to the product requirement. It can be used as USB device only, USB host only, it can switch host and device roles based on OTG mechanisms (HNP and SRP can be separately configured) or in-band signaling with control messages entirely under firmware control.

Microchip Ex. 1013, p. 43
Microchip v. Aptiv
IPR2024-00228

Aptiv Exhibit 2011 Page 43
Microchip v. Aptiv IPR2024-00229

DocuSign Envelope ID: 21006CD8-3A89-44EF-9ECF-DF7EDF8B0033

2. Routing Switches

88. Supporting dual-role products (particularly in the context of USB Hubs) naturally led to the use of routing switches to connect the dual-role port to the appropriate transmission path depending on whether the downstream product is operating in host or device mode (*e.g.*, as I describe in §VI.C, when the downstream product is operating in host mode, the transmission path would include a host/host bridge). A POSITA would understand that using a bridge and an extra USB hub port is simpler and faster than creating a custom hub from scratch because the both the USB hub and bridge chips were commodity parts and the marginal cost of each hub port was low in comparison with the relative cost of a custom hub. Of course, in mass production, the design of a custom hub may be preferable due to smaller footprint, lower manufacturing costs, etc.

89. Routing switches, also known as routing logic (made with logic gates), have existed for many decades. *See, e.g.*, EX1040 (Fletcher). A common example is a multiplexer. These components connect particular input and output ports so that an input(s) may be routed to an output(s). For example, as shown below, a 2:1 multiplexing switch enables connecting either input "a" or "b" to output "z" via the "sel" (select) control signal.

Microchip Ex. 1013, p. 44
Microchip v. Aptiv
IPR2024-00228

Aptiv Exhibit 2011 Page 44
Microchip v. Aptiv IPR2024-00229

DocuSign Envelope ID: 21006CD8-3A89-44EF-9ECF-DF7EDF8B0033

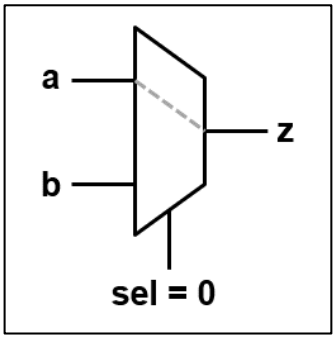

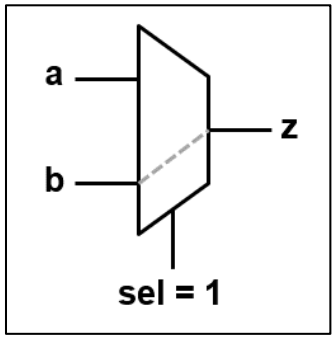

90. These switches exist as both digital and analog switches. EX1069, 21-27.

91. One type of well-known switch is the crossbar switch that can route any input to any output. *See, e.g.*, EX1040 (Fletcher), 4:39-5:29. An example 3x2 crossbar switch (without control logic/signals shown) is shown below:

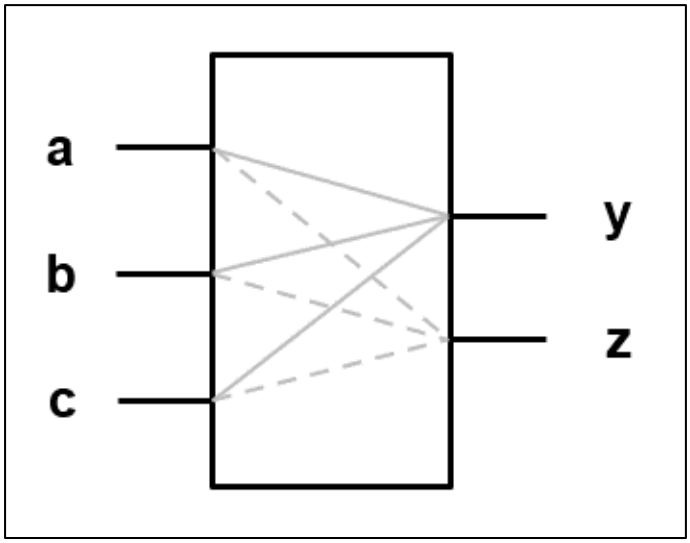

3x2 Crossbar Switch

See also EX1063 (MAX4989 commercial 2x2 USB crosspoint switch from Maxim Integrated Products).

Microchip Ex. 1013, p. 45
Microchip v. Aptiv
IPR2024-00228

Aptiv Exhibit 2011 Page 45
Microchip v. Aptiv IPR2024-00229

DocuSign Envelope ID: 21006CD8-3A89-44EF-9ECF-DF7EDF8B0033

92. Crossbar switches are often built from multiplexers. *See, e.g.*, EX1041 (Young), 1:31-36 ("*FIG. 2 shows a multiplexer implementation of the crossbar switch*."). Multiplexers and crossbars come in many different configurations to fit the particular application, namely, a particular number of inputs and output ports. *Id.* Routing switches were basic building blocks of logic design and were well-known and easy to implement. *Id.*; *see also id.*, 1:20-36 (crossbar switch); EX1055 (Baker), 284-288.

93. Building on this very general purpose and widely known circuit type, companies have started to offer special purpose switches specifically for USB. *See* EX1059; EX1060; EX1063; EX1068; EX1071. The differences are that not just one signal, but two (*i.e.*, D+ and D-) have to be switched, and that impedance discontinuity is minimized across the switch. This is important at the High Speed (480 mb) data rate. An example of a USB switch is shown below:

Microchip Ex. 1013, p. 46
Microchip v. Aptiv
IPR2024-00228

Aptiv Exhibit 2011 Page 46
Microchip v. Aptiv IPR2024-00229

DocuSign Envelope ID: 21006CD8-3A89-44EF-9ECF-DF7EDF8B0033

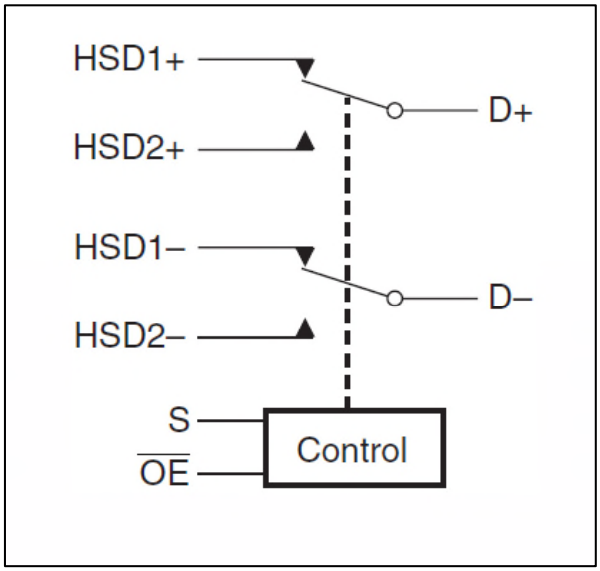

EX1068 ("*FSUSB30 Low-Power, Two-Port, High-Speed USB 2.0 (480Mbps) Switch*"); *see also* EX1060 (Fairchild FSUSB63); EX1063 (Maxim 4989 Datasheet for USB 2.0 Hi-Speed 2-of-4 Crosspoint Switch). Other examples of USB switch offerings from the well-known Fairchild Semiconductor company in 2011 are shown in EX1059.

94. To demonstrate how easy it is to construct a crossbar switch, I show below a simple USB 3 x 2 partial crossbar[4] design created using two USB 2:1

[4] In a full crossbar, every input can be routed to every output, and vice versa. The design I show is a partial crossbar because Port 1 cannot be routed to H2 in the hub, and Port 2 cannot be routed to H1 in the hub. But that does not matter in the context of the hub design shown, because each of Ports 1 and 2 can be routed through the bridge or around the bridge.

Microchip Ex. 1013, p. 47
Microchip v. Aptiv
IPR2024-00228

Aptiv Exhibit 2011 Page 47
Microchip v. Aptiv IPR2024-00229

DocuSign Envelope ID: 21006CD8-3A89-44EF-9ECF-DF7EDF8B0033

multiplexers. I show a 3 x 2 crossbar for illustrative purposes, but a POSITA could readily design and construct a USB crossbar with any reasonable number of input and output ports using similar components. This works because switch "OFF isolation" is approximately -40 dB which is well within the USB High Speed noise specification. In addition, these switch parts have been carefully designed and characterized to fully support the USB Specifications including USB High Speed (480 mb).

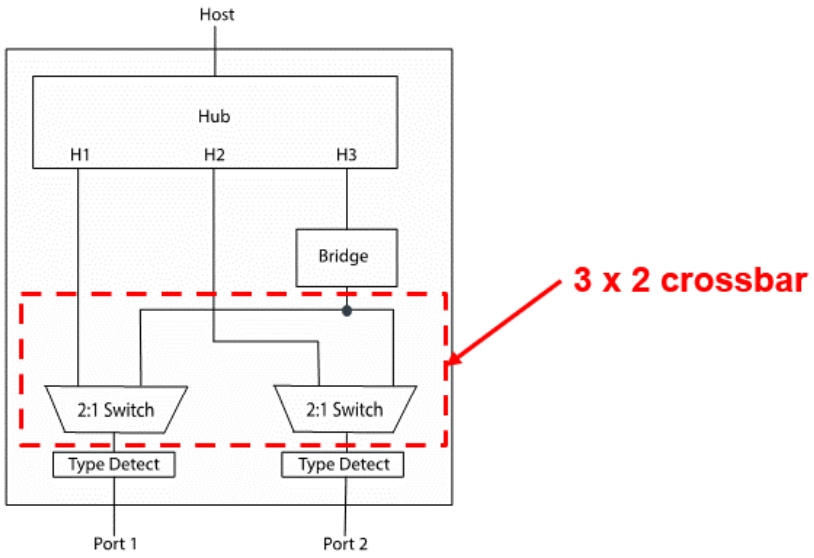

95. One notable use of routing switches was to route USB communications emanating from a USB product to the appropriate path upon detection of whether the product is operating in host or device mode. For example, Hesse discloses a crossbar switch (which Hesse also refers to as "*port router*") that routes ports (the inputs) to the appropriate "*port handler*" (the outputs) depending on whether the

Microchip Ex. 1013, p. 48
Microchip v. Aptiv
IPR2024-00228

Aptiv Exhibit 2011 Page 48
Microchip v. Aptiv IPR2024-00229

DocuSign Envelope ID: 21006CD8-3A89-44EF-9ECF-DF7EDF8B0033

USB product is operating in host or device mode. EX1017 (Hesse), Fig. 6, [0056]-[0057] (port routing depending on unit's configuration). Similarly, Wang discloses a "*switching structure*" to route USB ports to the appropriate path depending on host or device detection. EX1052 (Wang), Fig. 1, 3:7-20; *see also* EX1053 (Sakaki), Fig. 1, [0031]-[0034] (switching data line connections according to detection of hot or device mode).

96. A POSITA would have understood that such a switch could easily be included and/or integrated on the same chip as other components such as a detection circuit of VII.B.1. For example, as I discuss in §VIII.B, Chang II co-locates switching and detection circuitry on a common "*control chip*."

C. Host-to-Host Bridges

97. Although not specifically anticipated in the USB-IF specifications, and because end users sometimes thought of USB as a "cable replacement" technology, there was early interest in a USB product that could connect two USB hosts. For example, connecting two PCs (both being a host) to enable file transfer. *See, e.g.*, EX1034 (Lin), 5:56-59; EX1035 (commercial product brochure for connecting two hosts).

98. The effort to connect two USB hosts led to the host-to-host bridge. A bridge includes two USB device ports. Each host would connect to the device port, and the device port would present a device to the host. From the host's perspective,

Microchip Ex. 1013, p. 49
Microchip v. Aptiv
IPR2024-00228

Aptiv Exhibit 2011 Page 49
Microchip v. Aptiv IPR2024-00229

DocuSign Envelope ID: 21006CD8-3A89-44EF-9ECF-DF7EDF8B0033

the host connects to a device (*e.g.*, it enumerates the device interface). The bridge then effectively transfers data between the two internal devices, allowing the hosts to transfer data (bridging the hosts). These connections comply with the USB standards because each host would use standard USB communications to its side of the bridge. *See, e.g.*, EX1035 ("*Hi-Speed USB Host to Host Bridge Controller*" featuring "*Full compliance with the USB Specification v2.0"); EX1037 ("USB2.0 Host-to-Host Networking Controller*" that is "*USB Specification revision 2.0 Compliant*"); EX1034 (Lin), 7:7-11 ("*USB ... compliant*").

99. Examples include the Prolific PL-2501 and Cypress EZ-Link (AN2720SC), both of which implement comm class NDIS. *See* EX1035, EX1054. Often these devices implemented one of the USB comm class interfaces, thus making the interface look like a serial cable or an ethernet cable. The "far side" of these types of interfaces were originally designed to terminate in a physical serial or network connector.

D. Automotive USB Applications

100. USB has been used in a wide variety of environments beyond the original computer host and peripheral. Use cases include automotive entertainment, airplane cockpits, the local environment of a high precision surveyor, a high-end recording studio, a bird watcher up a tree, and so on. Types of devices included (by 2013) computer keyboards and mice, printers, disk, thumb drive and CD/DVD

Microchip Ex. 1013, p. 50
Microchip v. Aptiv
IPR2024-00228

Aptiv Exhibit 2011 Page 50
Microchip v. Aptiv IPR2024-00229

DocuSign Envelope ID: 21006CD8-3A89-44EF-9ECF-DF7EDF8B0033

drives, GPS receivers, audio headsets, chargers, fans, video devices, etc. As the USB 3.0 Specification stated in 2008, "*USB is the most successful PC peripheral interconnect ever defined and it has migrated heavily into the [consumer electronics] and Mobile segments*." EX1023, §1.1. And "*USB has gone beyond just being a way to connect peripherals to PCs*," with devices like PDAs and smartphones acting as hosts. *Id*. More generally, by 2008, the USB protocol was even "*being picked up and used in many nontraditional applications*." *Id*.

101. USB came to be used in automotive applications for several reasons, including (1) the car's electrical system was a natural fit for USB and could easily provide charging power for portable devices, (2) car navigation and other systems could take advantage of GPS transceiver in a smartphone, and (3) songs on a smartphone could be played through the car audio system.

102. Well before 2013 (the priority date of the Challenged Patents), vehicles often included USB-compatible embedded host computers in the form of infotainment systems. *See, e.g.*, EX1029 (Chutorash), Figs. 1, 3, and 27-30; 1:20-25, 14:40-53, and 27:4-55. These infotainment systems are effectively computers. Thus, connecting downstream USB devices to such an infotainment system was well developed and understood. And well before 2013, numerous portable consumer products (like GPS/navigation, smartphones, and media players) with USB ports were being used. *Id*. Thus, USB connectively was a natural fit for vehicle systems.

Microchip Ex. 1013, p. 51
Microchip v. Aptiv
IPR2024-00228

Aptiv Exhibit 2011 Page 51
Microchip v. Aptiv IPR2024-00229

DocuSign Envelope ID: 21006CD8-3A89-44EF-9ECF-DF7EDF8B0033

By way of another example, a 2006 article titled "*USB In Automotive: No Longer Just For PCs*" explained that because "*the car has become a PC on wheels*" and "*consumer electronics are PC dependent*," employing USB in the automobile will avoid "*reinvent[ing] the wheel*." EX1049, 1. The article states that USB hosts can be located in "*either the portable consumer device or the infotainment system*." *Id.* Such vehicle deployments were "*scalab[e]*" and "*straight forward and easy to implement*." EX1050, 19. Scalable refers to the fact that it is simple to increase the size of the system, *e.g.*, adding a downstream hub to increase the number of downstream available ports.

103. By 2013, USB deployments in vehicles were common, including using hubs to increase the available downstream ports. For example, by 2002, USB hubs were already used in automobile entertainment systems. *See* EX1016 (Overtoom), Title, Abstract, and Fig. 1 (describing a "*Dual-Role Compatible USB Hub*" for "*vehicle entertainment systems*").

104. U.S. Patent No. 8,447,598 ("Chutorash," EX1029) (discussed *infra* §VIII.C) provides a discussion of a USB deployment in a vehicle. Chutorash discloses a "*vehicle control system 106 (e.g., media system ...)*" shown in Figs. 1 and 3 below, *i.e.*, an infotainment system. EX1029 (Chutorash), 5:31-33. Chutorash's vehicle control system includes "*a USB connector or interface 2728, 2744*" that is

Microchip Ex. 1013, p. 52
Microchip v. Aptiv
IPR2024-00228

Aptiv Exhibit 2011 Page 52
Microchip v. Aptiv IPR2024-00229

DocuSign Envelope ID: 21006CD8-3A89-44EF-9ECF-DF7EDF8B0033

"*within vehicle 100*" for connecting "*mobile phone 2734*," "*PDA 2746*," "*media player 2752*," etc. to an "*embedded host*." *Id.*, 27:4-29; *see also* Fig. 27.

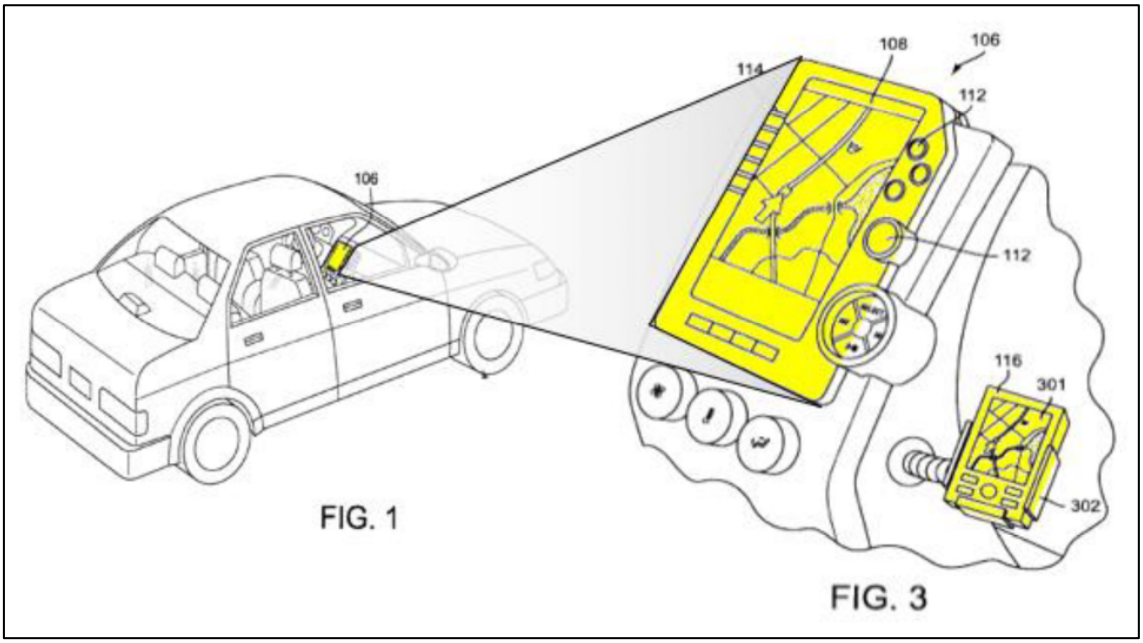

E. USB Power Delivery Specifications

105. The '962 patent cites "*USB Power Delivery Specification Rev. 3.0 v1.0 published Mar. 25, 2106 [sic] by the USB Implementer's Forum, Inc*." and "*USB Type-C Cable and Connector Specification, Revision 1.2 published Mar. 25, 2106 [sic] by the USB Implementer's Forum, Inc*." EX1005, 10:36-57.

106. The USB PD Specification Revision 1.0 was published on July 5, 2012, Revision 2.0 on August 11, 2014 (on the same day as the first USB-C specification) and Revision 3.0 on December 11, 2015. EX1020, 13. It established an entirely new scheme for USB power management, tied (as of R2.0) to the USB-C connector. With this new scheme, devices had a new way (beyond OTG) to negotiate Host and

DocuSign Envelope ID: 21006CD8-3A89-44EF-9ECF-DF7EDF8B0033

Device roles and additionally to negotiate separately about Source and Sink power roles. Traditionally USB power was always five volts, was initially limited to 0.5A, and gradually expanded to 1.5A or more. Under USB PD, higher voltages and currents could be negotiated, up to 20V @ 5A or up to 100W.

107. The USB-C connector specification Revision 1.0 was published on August 11, 2014. EX1019, 14. This new connector supported all previous signaling schemes (USB 2.0 single twisted pair and USB 3.0 two additional twisted pairs), provided the same connector for both ends of a cable and allowed that connector to be plugged into its associated receptacle in either orientation. It also provided some new signals (CC1 and CC2) for detecting cable orientation and for a new communication scheme where each side could exchange information and control messages about power and role (*i.e.*, host and device).

VII. THE CHALLENGED PATENTS

108. The Challenged Patents include the ’962, ’072, ’420, and ’643 patents. Each of these patents includes a common specification except for the ’962 patent, which includes additional material (*see* below). For convenience, I will refer to the specification of the Challenged Patents as being the common subject matter among these four patents, and specifically refer to the new subject matter in the ’962 patent where appropriate.

Microchip Ex. 1013, p. 54
Microchip v. Aptiv
IPR2024-00228

Aptiv Exhibit 2011 Page 54
Microchip v. Aptiv IPR2024-00229

DocuSign Envelope ID: 21006CD8-3A89-44EF-9ECF-DF7EDF8B0033

109. The '962 patent is a continuation-in-part patent titled "*Flexible Mobile Device Connectivity to Automotive Systems with USB Hubs*" and was filed September 6, 2016. EX1005. The '962 patent claims priority to September 26, 2013 (which I understand is the priority date except for the new matter). The '962 patent contains 19 claims. The new matter includes Figs. 9-10 and accompanying discussion related to power delivery capabilities in a "*USB hub power module*." *See id.*, Figs. 9-10, 10:36-11:9. This new matter is relevant to claims 11-13 and 18-19.

110. The '072 patent is titled "*Flexible Mobile Device Connectivity to Automotive Systems with USB Hubs*" and claims priority to September 26, 2013. EX1009. The '072 patent contains a single claim.

111. The '420 patent is titled "*Flexible Mobile Device Connectivity to Automotive Systems with USB Hubs*" and claims priority to September 26, 2013. EX1003. The '420 patent contains 20 claims.

112. The '643 patent is titled "*Flexible Mobile Device Connectivity to Automotive Systems with USB Hubs*" and claims priority to September 26, 2013. EX1011. The '643 patent contains 15 claims.

A. Summary of the Challenged Patents

113. The specification of the Challenged Patents includes a "BACKGROUND" section (including Figs. 1-3) that summarizes some of the basic

Microchip Ex. 1013, p. 55
Microchip v. Aptiv
IPR2024-00228

Aptiv Exhibit 2011 Page 55
Microchip v. Aptiv IPR2024-00229

DocuSign Envelope ID: 21006CD8-3A89-44EF-9ECF-DF7EDF8B0033

USB functionality from the USB 2.0 Specification.[5] For example, the specification describes the connection of a "*USB Host or master*" to "*a USB Device or slave*." EX1003, 1:33-38. The specification also describes "*use of USB Hubs*" to "*allow a single USB Host to connect to multiple USB Devices over a single cable*." *Id*., 1:66-2:2.

114. The specification also discusses the OTG Supplement, which provides "*dual-role*" functionality, where a USB product can "*act as either USB Host or USB Device*." EX1003, 3:17-23. With respect to smartphones in particular, the specification states that it is "*not surprising*" that "*system level design thinking has shifted towards viewing smart phones as the USB Host*" because "*this is exactly how laptops and PCs work today*." *Id*., 2:62-66.

115. The specification alleges that in the context of an application using a hub (*e.g.*, an automobile deployment), traditional "*USB Hubs do not support OTG*" and cannot support a downstream host, *e.g.*, a smartphone acting as a host. EX1003, 3:28-29. The specification discounts "*custom USB hubs*" that support OTG because these custom USB hub perform a host/device role swap that disconnects "*all other*

[5] The Challenged Patents share a common specification, with the exception of the '962 patent which add some new matter. For consistency, I cite to the '420 patent unless otherwise noted.

Microchip Ex. 1013, p. 56
Microchip v. Aptiv
IPR2024-00228

Aptiv Exhibit 2011 Page 56
Microchip v. Aptiv IPR2024-00229

DocuSign Envelope ID: 21006CD8-3A89-44EF-9ECF-DF7EDF8B0033

downstream ports of the USB Hub[]." *Id*., 3:46-67. This refers to when the downstream USB product acts as a host, the upstream host swaps to being in device mode, and the upstream host (now a device) no longer has connection to other downstream USB products. Simply put, the upstream host is no longer a host, and thus cannot connect to other downstream devices.

116. The Challenged Patents' alleged novelty is shown in Fig. 4. In particular, the specification discloses adding two components (a host-to-host bridge and a routing switch) to a traditional USB hub. *See, e.g*., EX1003, 5:21-24, 5:46-6:63. The USB host-to-host bridge and switching components were well-known. The bridge enables a host-to-host connection through the hub. *Id*., 6:5-10. The upstream host may connect through the hub because the bridge has a device interface, and thus the connection through the bridge appears as a standard host-to-device connection. The switch provides a bypass route. *Id.*, 6:5-13. Because consumer products may be dual-role, this switch enables bypassing the bridge when the downstream product is in device mode. *Id*.

117. The bridge and switch enable dual-role downstream smartphones to connect to the embedded upstream host[6] as device or host. *See, e.g.*, EX1003, 6:5-

[6] As the '420 patent describes, the "head unit" refers to an upstream host in a vehicle. *See, e.g.*, EX1003 ('420 patent), 5:53-58.

Microchip Ex. 1013, p. 57
Microchip v. Aptiv
IPR2024-00228

Aptiv Exhibit 2011 Page 57
Microchip v. Aptiv IPR2024-00229

DocuSign Envelope ID: 21006CD8-3A89-44EF-9ECF-DF7EDF8B0033

13. When the downstream "*consumer device is acting as USB Host, the USB Bridge processes the USB packets from the consumer port … thereby rendering the consumer device compatible with the vehicle's embedded USB Host*." *Id.*, 6:5-10. When the downstream "*consumer device is acting as USB Device, … the switching device provides the USB signaling directly to the USB Hub, bypassing the Bridge*." *Id.*, 6:10-13.

118. The communication paths are illustrated in annotated versions of Fig. 4 below for the two cases where the downstream product, *e.g.*, a smartphone, is operating in device and host mode. The purple arrows show the path taken when the smartphone mode is in device mode, and the red arrows show the host mode path.

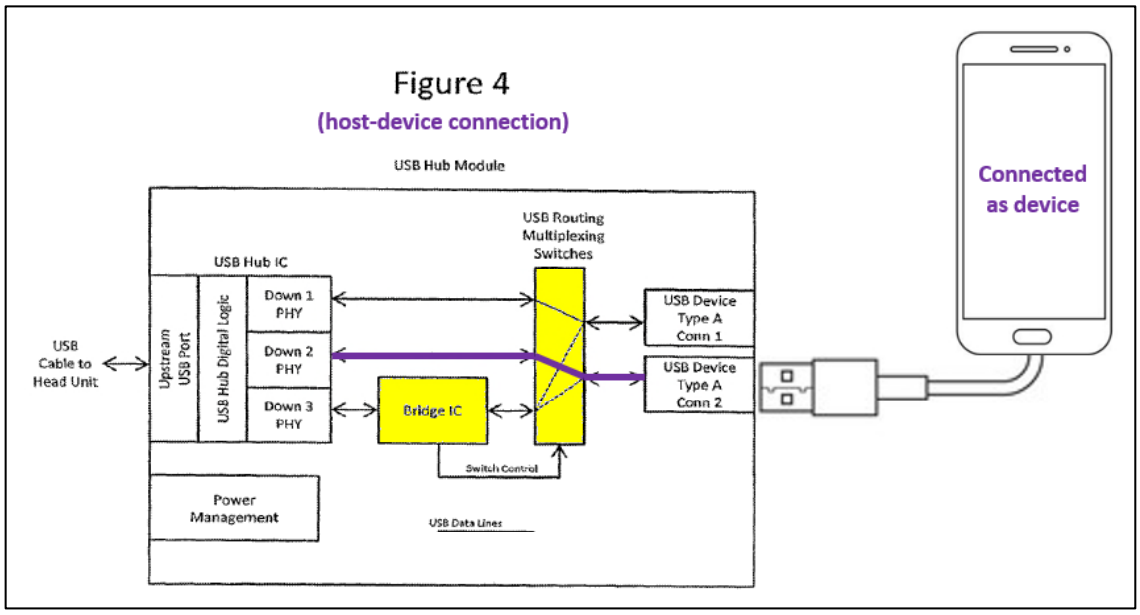

Microchip Ex. 1013, p. 58
Microchip v. Aptiv
IPR2024-00228

Aptiv Exhibit 2011 Page 58
Microchip v. Aptiv IPR2024-00229

DocuSign Envelope ID: 21006CD8-3A89-44EF-9ECF-DF7EDF8B0033

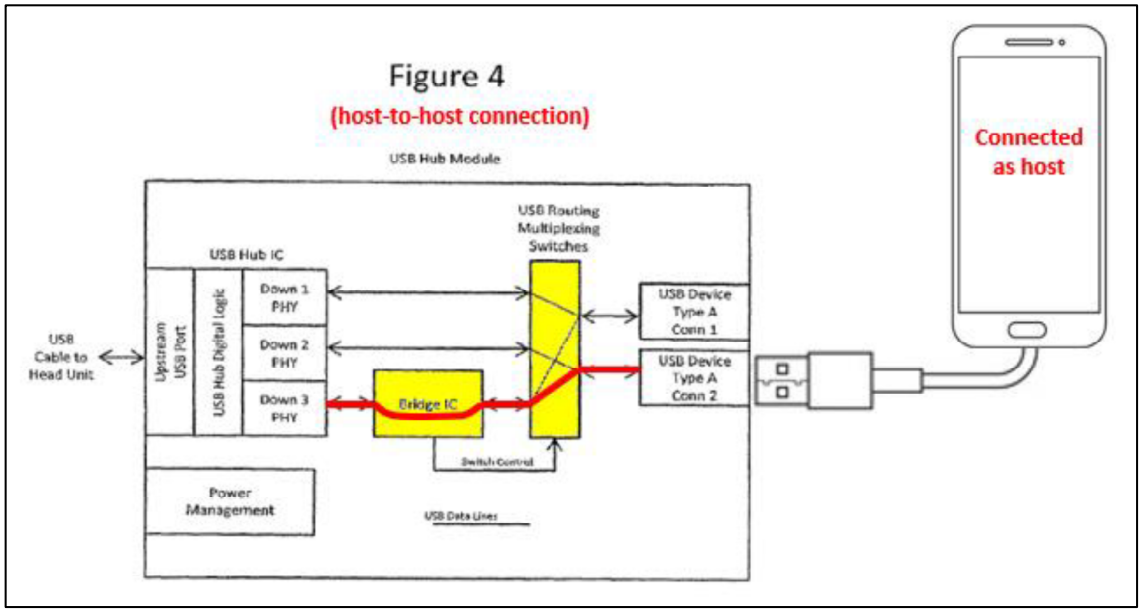

119. Fig. 5 is an alternate embodiment with a similar architecture. The primary difference between Figs. 4 and 5 is that in the Fig. 5 embodiment, the "*USB routing/switching logic and a USB Bridge are integrated with a USB Hub in a combination USB Hub/USB Bridge Integrated Circuit (IC)*." EX1003, 5:27-29; *see also id.*, 7:11-17.

120. Figs. 6-7 provide additional details regarding Fig. 5. EX1003, 5:30-33 and 7:18-8:38. These figures illustrate the device interfaces of the bridge.

121. Fig. 8 shows "*a Head Unit Software Architecture*." EX1003, 5:34-35 and 8:39-9:9. This figure illustrates that a head unit (namely, a head unit of a vehicle) connects to the hub's upstream port.

122. The Challenged Patents do not disclaim use of downstream dual-role OTG devices. That is, while the Challenged Patent criticize the use of OTG device

DocuSign Envelope ID: 21006CD8-3A89-44EF-9ECF-DF7EDF8B0033

swapping such that the upstream host becomes a device, it does not disclaim the use of downstream OTG products that may operate in host or device mode. For example, the Challenged Patents only states that the "*embedded USB host*" lacks "*On the Go (OTG) capability*." EX1003, 1:17-24.

123. The '962 patent includes new matter that is not in the specification of the other Challenged Patents. This new matter is Figs. 9-10 and accompanying text. The new matter describes "*USB hub power module[s]*" that admittedly is "*described [in] USB Power Delivery Specification Rev. 3.0 v1.0 … [and] USB Type-C Cable and Connector Specification, Revision 1.2 published Mar. 25, 2106 [sic] by [USB-IF]*" (*see* EX1020 and EX1019). EX1005, 10:36-47; *see also id.*, 6:48-51 and 10:36-11:9. The new matter discloses that the hub modules may "*include[] adjustable voltage power supplies 938, power control logic circuits 940 to facilitate handshaking over the CC1 and CC2 pins, and a communication control stack that is integral to the logic circuits*." *Id.*, 10:47-53. In short, the new matter relates to the hub and downstream product being able to negotiate the power that the hub will provide to the downstream product.

B. File History

124. In this section, I describe the file histories of each patent in the family of the Challenged Patents. As part of my review of the file histories, I was asked to opine on (1) whether there were any rejections of pending claims that are based on

Microchip Ex. 1013, p. 60
Microchip v. Aptiv
IPR2024-00228

Aptiv Exhibit 2011 Page 60
Microchip v. Aptiv IPR2024-00229

DocuSign Envelope ID: 21006CD8-3A89-44EF-9ECF-DF7EDF8B0033

prior art that is substantially the same as Chang or Chang II, and (2) whether any arguments made by the Examiner are substantially the same as that of Chang in view of Chang II and the knowledge of a POSITA (and other grounds that include these references) render the claims of the Challenged Patent obvious. As I describe below, it is my opinion the answer is no to each question.

U.S. Pat. 9,460,037

125. The claims of the '037 patent application were rejected over two primary references: Kellzi (U.S. Pub. 2007/0156293, EX1046) and Bohm '759 (U.S. Pub. 2006/0227759, EX1042). *See generally* EX1002. Neither of these references is substantially the same as Chang or Chang II.

126. The Examiner issued an anticipation rejection over Kellzi. EX1002, 76. In response, Applicant amended the claims to require a bridge that establishes a host-to-host connection. *Id.*, 98. Applicant also argued that Kellzi did not anticipate due to Kellzi's OTG implementation for several reasons:

- lacked an "embedded host";
- lacked a host-to-host connection; and
- had limited connection and port swapping capabilities where "there is an intervening hub."

See id., 104-108. Note that with an upstream OTG controller, as in Kellzi, there would be role "swapping" that the specification of the Challenged Patents discourages. Kellzi is not substantially the same as Chang or Chang II.

Microchip Ex. 1013, p. 61
Microchip v. Aptiv
IPR2024-00228

Aptiv Exhibit 2011 Page 61
Microchip v. Aptiv IPR2024-00229

DocuSign Envelope ID: 21006CD8-3A89-44EF-9ECF-DF7EDF8B0033

127. Then, the Examiner issued anticipation and obviousness rejections based on Bohm '759. EX1002, 115. Bohm '759 is not substantially the same as Chang or Chang II.

128. The Applicant argued that the Examiner's reading of Bohm '759 was "*not logical*" because components such as Hub Controller 203 (the alleged bridge shown in yellow below) could not be inside the hub and "*separate elements ... interconnected to the [hub]*." EX1002, 163.

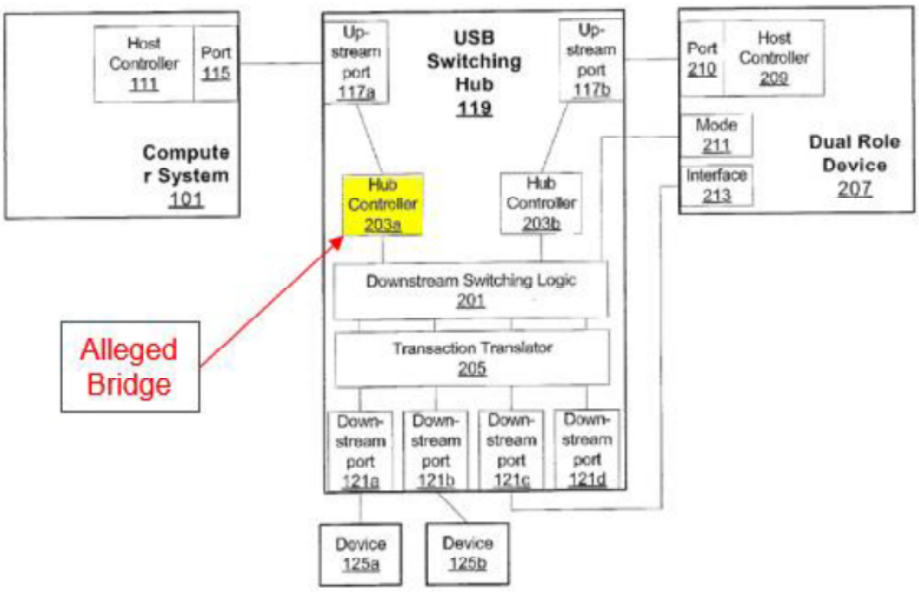

EX1042 (Bohm '759), Fig. 3 (annotated).

129. An Examiner Interview, Examiner Amendment, and Notice of Allowance followed. EX1002, 185-197. I discuss the amendment with respect to two changes to the claims.

DocuSign Envelope ID: 21006CD8-3A89-44EF-9ECF-DF7EDF8B0033

130. First, with Applicant's consent, Examiner amended claim 1 to require the hub to "*connect the embedded USB Host system to a second USB Host*." *Id.*, 190-191; *see also* EX1042 (Bohm '759), [0038]. In other words, the amendment requires a host-to-host connection. As can be seen in the above figure, Bohm '759 does not support host-to-host connections, as there is no bridge (the upstream hosts only connect to downstream devices and do not connect to each other).

131. Second, the Examiner amended claim 1 to require "*broadcast[ing] data from the embedded USB Host system to each USB Port in the plurality of USB Ports*." EX1002, 190-191. As shown below, this amendment distinguishes the configuration of Bohm '759 as shown in Figs. 4a-b because each upstream host broadcasts to specific downstream ports. *See* EX1042 (Bohm '759), Fig. 4a-b and [0040]-[0042].

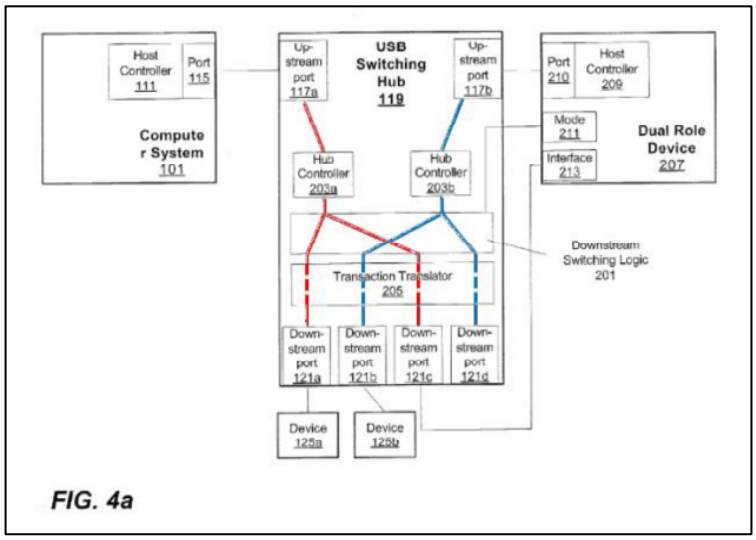

FIG. 4a

DocuSign Envelope ID: 21006CD8-3A89-44EF-9ECF-DF7EDF8B0033

U.S. Pat. 9,619,420

132. There were no prior art rejections, and the claims issued with an Examiner Amendment following an Examiner Interview. *See* EX1004, 146-156.

U.S. Pat. 9,645,962

133. There were no prior art rejections. *See* EX1006.

U.S. Pat. 10,545,899

134. The '899 patent application was rejected over U.S. Pat. 7,502,878 ("Wright," EX1047). EX1008, 401. Applicant amended claim 1 to require (among other things) "*a USB bridge interconnected to the USB hub, and a USB routing switch interconnected to the USB bridge, the USB hub, and the second USB port*." *Id.*, 454. Applicant argued Wright lacked a bridge. Specifically, Applicant argued that "*hub logic 38*" (which the Examiner argued was a bridge) is not a bridge because "*hub logic 38*" is a conventional hub. *Id.*, 460.

135. Examiner again rejected the claims over Wright. Here, the Examiner defined the hub functionally, asserting that Wright discloses a bridge because its "*hub logic 38 ... performs the same claimed bypass function as claimed 'USB bridge' .... If claimed '**USB bridge'** is a specific 'bridge', the specifics have to be recited*." EX1008, 466 (emphasis in original).

136. Applicant then made significant claim amendments, including defining the bridge as connecting two hosts (EX1008, 488) and argued Wright does not

Microchip Ex. 1013, p. 64
Microchip v. Aptiv
IPR2024-00228

Aptiv Exhibit 2011 Page 64
Microchip v. Aptiv IPR2024-00229

DocuSign Envelope ID: 21006CD8-3A89-44EF-9ECF-DF7EDF8B0033

disclose "*a USB bridge interconnected to the USB hub and configured to connect the USB host to a second USB host*." *Id.*, 493.

137. In an Examiner Interview, Applicant "*described the invention as a hub to dynamically switch a device connection between USB Device mode and USB host mode when desired*." EX1008, 498. The Examiner allowed the claims, noting that the prior art does not disclose the claim language. *Id.*, 523.

138. Wright is not substantially the same as Chang or Chang II. I discuss Wright further below. Wright does not disclose a bridge for host-to-host communication.

U.S. Pat. 11,176,072

139. The '072 patent application was filed with 11 claims, but only claim 1 ultimately issued. EX1010, 372-373, 274. Thus, I will describe the file history with respect to claim 1.

140. The Examiner rejected claim 1 as anticipated by Wright and objected because the "mode change" language was unclear. EX1010, 274-281. Applicant substantially amended claim 1 (similar to its current form) in a Supplemental Amendment and Response to expressly recite "host" and "device" modes (where device mode signals "*bypass[ed] the USB Bridge*"). *Id.*, 352.

Microchip Ex. 1013, p. 65
Microchip v. Aptiv
IPR2024-00228

Aptiv Exhibit 2011 Page 65
Microchip v. Aptiv IPR2024-00229

DocuSign Envelope ID: 21006CD8-3A89-44EF-9ECF-DF7EDF8B0033

141. As shown below, the Examiner's anticipation rejection was based on mapping Wright's "*multiplexer 36*" to the claimed bridge and "*hub logic 38*" to the claimed USB hub. EX1010, 356.

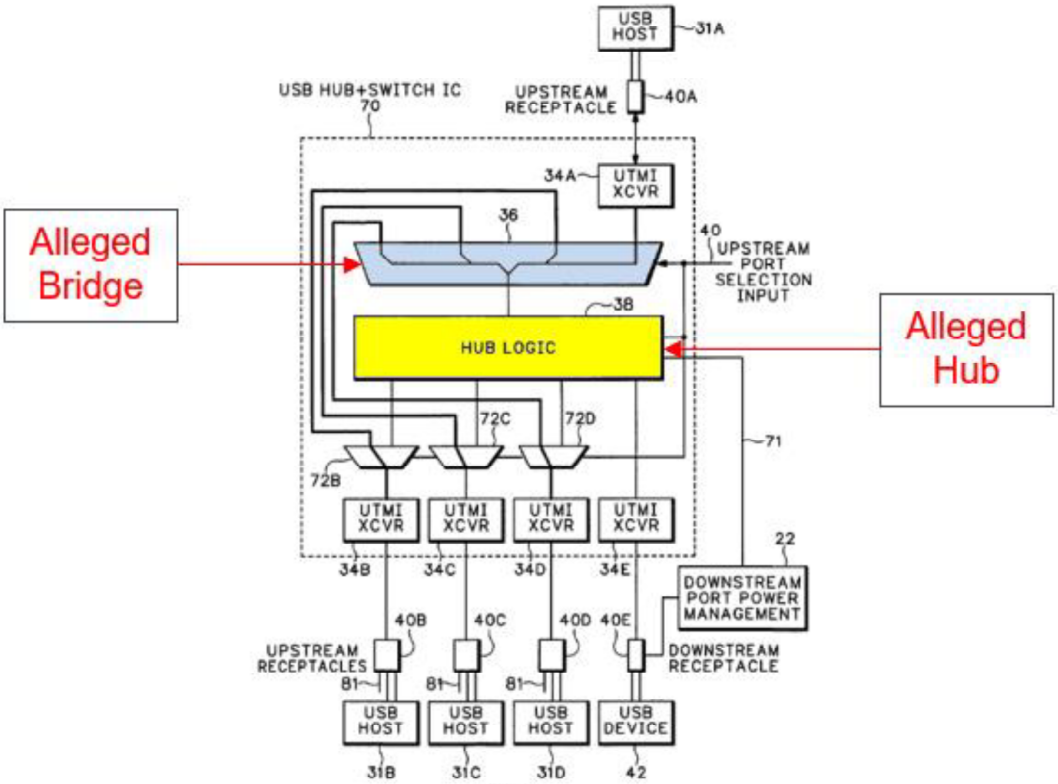

FIG.5

EX1047 (Wright), Fig. 5 (annotated).

142. Applicant argued two distinctions over Wright: (1) Wright's alleged host-to-host communications (between hosts 31A and 31B) bypassed the hub entirely; and (2) Wright's host-to-device communications passed through the bridge instead of bypassing it. EX1010, 356. The Examiner allowed the claims following an Examiner Interview and minor clarifying amendments. *Id.*, 371-376.

Microchip Ex. 1013, p. 66
Microchip v. Aptiv
IPR2024-00228

Aptiv Exhibit 2011 Page 66
Microchip v. Aptiv IPR2024-00229

DocuSign Envelope ID: 21006CD8-3A89-44EF-9ECF-DF7EDF8B0033

143. Notably, Wright ***does not*** disclose a host-to-host connection. This is plainly clear from the fact that Wright discloses no bridge for such a connection, as well as other details. A multiplexer is not a bridge and only routes inputs to outputs. Regardless, as Applicant points out, the alleged host-to-host connection bypasses the hub and the alleged host-to-device communication passes through the alleged bridge.

U.S. Pat. 11,681,643

144. The Examiner issued a rejection over Wright, this time contending Wright's "*mux 36*" was the claimed hub and "*connection 74*" (*i.e.*, the wire between mux 36 and mux 72B) was the claimed USB bridge. EX1012, 67.

Microchip Ex. 1013, p. 67
Microchip v. Aptiv
IPR2024-00228

Aptiv Exhibit 2011 Page 67
Microchip v. Aptiv IPR2024-00229

DocuSign Envelope ID: 21006CD8-3A89-44EF-9ECF-DF7EDF8B0033

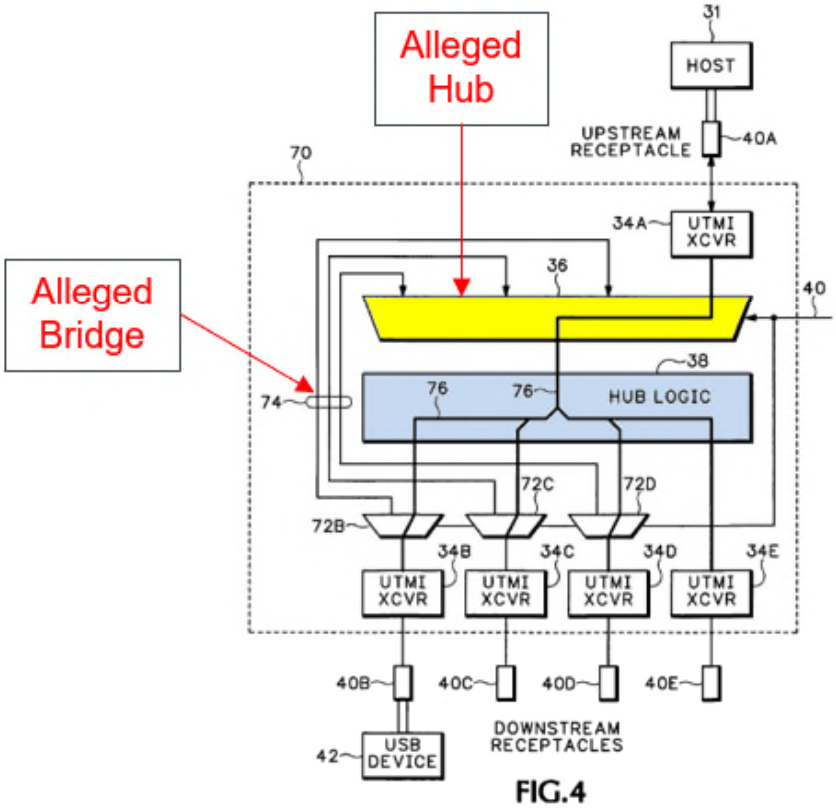

FIG.4

EX1047 (Wright), Fig. 4 (annotated). Applicant argued that "*multiplexer 36 of Wright cannot be fairly characterized as a USB hub*." *See* EX1012, 89.

145. Following an Examiner Interview and Examiner Amendment, namely, that the "*USB bridge includes a bridge controller, buffers, and a plurality of ports*," the claims were allowed. EX1012, 102-110.

146. Again, Wright is not substantially the same as, much less similar to, Chang or Chang II. A "mux" (which merely routes inputs to outputs) is not a hub. *See* §§VI.B.2 and VI.A.2 (describing multiplexers and hubs, respectively). The wire certainly is not a bridge (which connects two host by, *e.g.*, using to device

DocuSign Envelope ID: 21006CD8-3A89-44EF-9ECF-DF7EDF8B0033

interfaces). *See* §VI.C. And again, Wright ***does not*** disclose a host-to-host connection.

147. I understand that the Applicant disclosed Chang II along with other references to the Examiner. EX1012, 175, 180. Following another Examiner Interview, Examiner Amendment, and Notice of Allowance, the '643 patent issued. *Id.*, 197, 208. The amendments add that routing occurs via a "*routing logic circuit connected directly to a USB bridge*," the USB hub is "*connected to the USB bridge*," and "*the USB hub and USB bridge have different components and functionality*." *Id.*, 201-208. To the extent that the Examiner was considering Chang II specifically, the obviousness grounds of Chang in view of Chang II does not rely on any alleged hub in Chang II, and thus whatever the Examiner may have been considering when viewing Chang II is different than the obvious grounds upon which I opine herein.

VIII. THE PRIOR ART REFERENCES

A. Chang Summary

148. Chang is titled "*Hub with a Host-to-Host Transmission Function*." The "*SUMMARY OF THE INVENTION*" explains that "*host-to-host transmission*" is accomplished via "***a bridge connected between the host port and hub control unit*** *for the first and second hosts to communicate with each other*." EX1014 (Chang), [0005] (emphasis added). Chang does not detail the operation of the bridge. This is because Chang recognizes the "*host-to-host transmission mechanism [viz., USB*

Microchip Ex. 1013, p. 69
Microchip v. Aptiv
IPR2024-00228

Aptiv Exhibit 2011 Page 69
Microchip v. Aptiv IPR2024-00229

DocuSign Envelope ID: 21006CD8-3A89-44EF-9ECF-DF7EDF8B0033

bridge] is a prior art," and for that reason "*is not described in detail*." *Id.*, [0020]; *see also id.*, [0022] ("*conventional bridge*"); [0020] (The OTi2108 commercial chip). Chang cites an example commercial bridge chip. *Id.*

149. Fig. 3 of Chang illustrates how Chang creates a host-to-host connection through a hub, namely, by including a bridge 52 (which has a device interface) below Hub Control Unit 46. Chang explains that Fig. 3 "*shows a hub 40 ..., which has, as a conventional hub, an uplink port 42 for being linked to a host, several downlink ports 44 for being linked to devices, and a hub control unit 46 for establishing several transmission paths 48 between the uplink port 42 and downlink ports 44*." EX1014 (Chang), [0019].

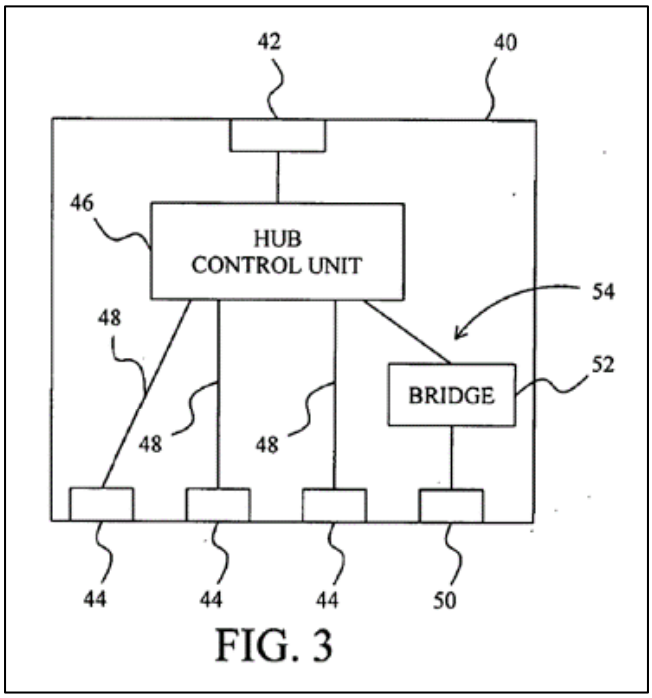

FIG. 3

Id., Fig. 3.

Microchip Ex. 1013, p. 70
Microchip v. Aptiv
IPR2024-00228

Aptiv Exhibit 2011 Page 70
Microchip v. Aptiv IPR2024-00229

DocuSign Envelope ID: 21006CD8-3A89-44EF-9ECF-DF7EDF8B0033

150. As shown above, hub 40 includes "*host port 50 for being linked to a host, and a bridge 52 connected between the hub control unit 46 and host port 50*" where "*[t]he bridge 52 provides a function for host-to-host communications*." EX1014, (Chang), [0020]. That is, downstream ports 44 are dedicated device ports and downstream port 50 is a dedicated host port.

151. Consistent with conventional hubs, the uplink port "*link[s] to a host*," and "*several transmission paths may be established*" so the uplink port "*can communicate with each downlink port.*" EX1014 (Chang), [0018]. This refers to the typical common function of a USB hub.

152. Chang further teaches that its "*invention can be implemented merely by integrating or adding a bridge to a USB hub, and thus does not require too many modifications on the current hub control unit. Therefore, the derived cost is relatively low, while a multi-functional USB hub with a host-to-host transmission function is obtained*." EX1014 (Chang), [0024]. Additionally, Chang teaches that the bridge may be a discrete component (as shown in Fig. 3) or integrated with other circuity comprising the hub. *See id*., [0022]. In other words, Chang recognizes, as a POSITA would, that there are several available alternatives for incorporating the bridge into the above USB system.

Microchip Ex. 1013, p. 71
Microchip v. Aptiv
IPR2024-00228

Aptiv Exhibit 2011 Page 71
Microchip v. Aptiv IPR2024-00229

DocuSign Envelope ID: 21006CD8-3A89-44EF-9ECF-DF7EDF8B0033

B. Chang II Summary

153. Chang II is titled "*Data Transmission Bridge Device and Control Chip Thereof for Transmitting Data*." As its title suggests, Chang II relates to "*a bridge device for transmitting data; and more particular[ly] to a data transmission bridge device and control chip thereof for transmitting data that adopts USB specification, and can utilize switching to bridge between two host devices for transmitting data*." EX1015 (Chang II), [0002]. As I describe in §VI.C, USB Host-to-Host bridges are compliant with the USB specification.

154. Recall that Chang has dedicated host and device ports. In contrast, Chang II discloses a single port that allows a connected USB product to act either as a "*Second Host Device*" or a "*Slave Device*" (*see* ¶6262 on the term "*slave*") when communicating with a "*First Host Device*." *See* EX1015 (Chang II), [0030] ("*In practical design, the second connection interface 12 can also directly adopt an A-Type male connector and a B-Type male connector of USB specification to achieve dual connector type design*"); *see also id.* [0012] ("*the second connection interface is for connecting to a second host device or a slave device*.").[7]

[7] A POSITA would have understood (and certainly found it obvious) that connecting a dual-role product to the second interface was within Chang II's disclosure.

Microchip Ex. 1013, p. 72
Microchip v. Aptiv
IPR2024-00228

Aptiv Exhibit 2011 Page 72
Microchip v. Aptiv IPR2024-00229

DocuSign Envelope ID: 21006CD8-3A89-44EF-9ECF-DF7EDF8B0033

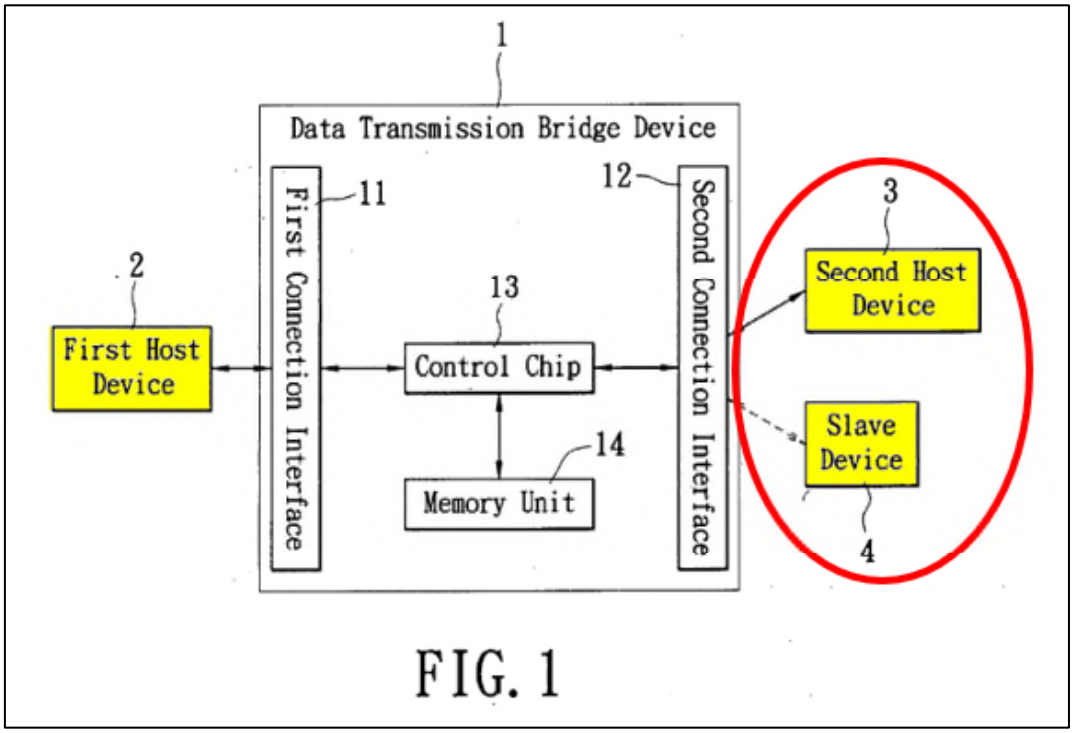

Id., Fig. 1 (annotated).

155. The single port that can accept either a device or host is also shown by viewing Figs. 1 and 2 together. Fig. 1 depicts the control chip as 13 and second connection interface as 12. As can be seen in Fig. 2, there are only two data lines (D+ and D- comprising the balanced USB data lines for a single port connection) between the control chip 13 and second interface 12 (DM_B and DP_B).

156. The "*data transmission bridge device … automatically detect[s] the connecting device type and accordingly switch[es] between different transmission paths, which would not only allow for support of data transfer between a host device and a slave device, but also can directly support data transfer between two host*

Microchip Ex. 1013, p. 73
Microchip v. Aptiv
IPR2024-00228

Aptiv Exhibit 2011 Page 73
Microchip v. Aptiv IPR2024-00229

DocuSign Envelope ID: 21006CD8-3A89-44EF-9ECF-DF7EDF8B0033

devices, … [and] is suitable for simple 'plug and play.'" EX1015 (Chang II), [0011]. I discuss in more detail how this detection occurs below.

157. Various embodiments of Chang II contemplate connecting a dedicated host product or dedicated device product to the second interface. Chang II also discloses, however, that "*other combinations and other connector types are too numerous to list, but those connector types covered under USB specification is all within the scope of the present invention*." EX1015 (Chang II), [0030]. One well-known connector type that this would include is the "Micro-AB" connector (and other known connectors) that accepted host, device, and/or dual-mode products. EX1022, 13 (OTG product "*provides both host and peripheral capabilities over a single Micro-AB receptacle*"). Thus, a POSITA would have understood (and certainly found it obvious) that connecting dual-role products to the second interface was within the scope of Chang II's disclosure. This is consistent with Chang II's overall disclosures including "*automatically detect[ing] the connecting device type*," that supports a dual-role product that dynamically switches between modes. EX1015 (Chang II), [0011].

158. The bridge is primarily implemented in control chip 13, as detailed in Fig. 5, reproduced with highlights below. Fig. 5 is "*a schematic diagram for a control chip for a data transmission bridge device ….*" EX1015, (Chang II), [0019]. "*As the figure shows, the present embodiment provides a control chip 13 for a data*

Microchip Ex. 1013, p. 74
Microchip v. Aptiv
IPR2024-00228

Aptiv Exhibit 2011 Page 74
Microchip v. Aptiv IPR2024-00229

DocuSign Envelope ID: 21006CD8-3A89-44EF-9ECF-DF7EDF8B0033

transmission bridge device 1, which includes: a first USB controller 131, a second USB controller 132, ***a bypass circuit unit 133, a detection unit 134****, a central processing unit (CPU) 135, and a buffer unit 136*." *Id.*, [0034] (emphasis added).

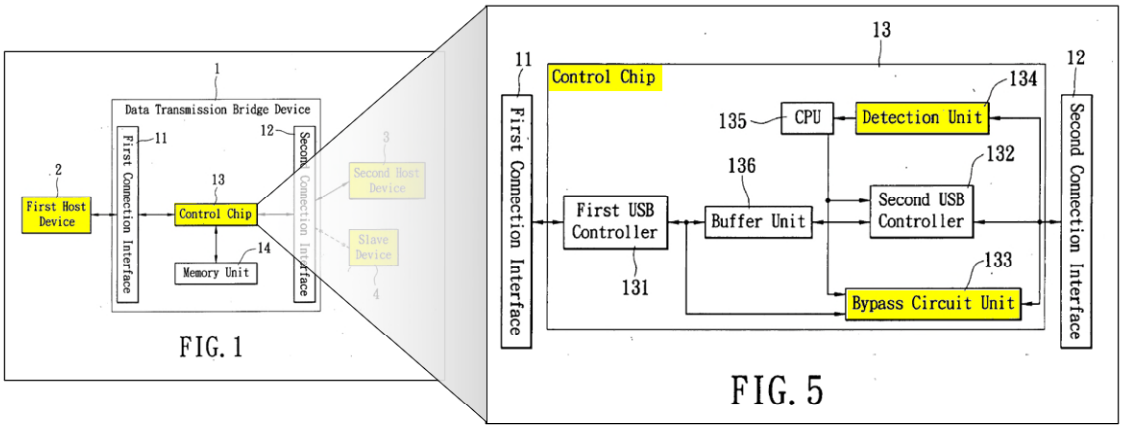

Id., Figs. 1, 5 (annotated).

159. ***Host/Device Detection***. As highlighted in Fig. 5 above, Chang II discloses a "*Detection Unit 134*." EX1015 (Chang II), [0038]-[0040], Fig. 6. "*The detection unit 134 … will automatically operate to switch between [states] … to determine the type of device currently connected*." *Id.*, [0038]; *see also id.*, [0028]. Chang II discloses that "*[f]or those skilled in the art of USB devices it is common knowledge*" to use an "*inquire signal*" to determine whether a connected USB product is a host or device. *Id.*, [0025]-[0027]. In view of the discussion at [0025]-[0027] and [0038]-[0040], a POSITA would have understood that this involves detecting the presence/values of resistors or other detection schemes as discussed *supra* §VI.B.1. More specifically, the detection unit detects the connection of a host

Microchip Ex. 1013, p. 75
Microchip v. Aptiv
IPR2024-00228

Aptiv Exhibit 2011 Page 75
Microchip v. Aptiv IPR2024-00229

DocuSign Envelope ID: 21006CD8-3A89-44EF-9ECF-DF7EDF8B0033

or device by (1) sending an "*inquire signal*" and receiving a response (when a host connects) or (2) receiving an "*inquire signal*" (when a device connects). EX1015 (Chang II), [0038]-[0040]. The detection unit then produces either a "*bridging detection signal*" (after detecting a host) or "*slave detection signal*" (after detecting a device). *Id.* These signals cause the switching to the appropriate transmission "*path*" (to use the bridge or bypass the bridge). *Id.*, [0042]-[0044]. That is, "*the control chip 13 can respectively switch to the bridge transmission path or the bypass path*." *Id.*, [0024]. A POSITA would have understood that an obvious implementation of Chang II's "*virtual slave state*," "*virtual host state*," "*inquire signal*," and "*inquire response*" is the combination of the USB Speed resistor on one of the data lines in a device, and the corresponding pull-down resistors and transactions on the data lines in a host that are the initiation of normal USB communication.

160. ***Switching Between Two Transmission Paths***. Chang II discloses "*a data transmission bridge*" that includes "***two different transmission paths, so that by automatically detecting the type of device connected (host or slave) the present invention can switch to the proper transmission path****, thus not only can host-slave operation between the host device and the slave device be supported, but direct bridging between two host device[s] for data transfer is also possible*." EX1015 (Chang II), [0021] (emphasis added).

Microchip Ex. 1013, p. 76
Microchip v. Aptiv
IPR2024-00228

Aptiv Exhibit 2011 Page 76
Microchip v. Aptiv IPR2024-00229

DocuSign Envelope ID: 21006CD8-3A89-44EF-9ECF-DF7EDF8B0033

161. The "*two transmission paths*" are (1) "*a bridge transmission path*" and (2) "*a bypass path*." EX1015 (Chang II), [0024]. These two transmission paths (shown with red lines for bridge and purple for bypass) are illustrated in annotated Figs. 1 and 5 below. The "*first path is the bridge transmission path which spans first connection interface 11, first USB controller 131, buffer unit 136, second USB controller 132, and second connection interface 12*." *Id.*, [0023]. As shown below, "*when the second connection interface is connected to a second host device, the second USB controller would also connect with the second host device through the second connection interface*" which "*form[s] a bridge for data transfer between the second host device and the first USB controller*." *Id.*, [0013]. The second USB controller 132 is central to creating the host-to-host bridge and would be understood to function as a device interface for the second host (*see* § VI.B).

Microchip Ex. 1013, p. 77
Microchip v. Aptiv
IPR2024-00228

Aptiv Exhibit 2011 Page 77
Microchip v. Aptiv IPR2024-00229

DocuSign Envelope ID: 21006CD8-3A89-44EF-9ECF-DF7EDF8B0033

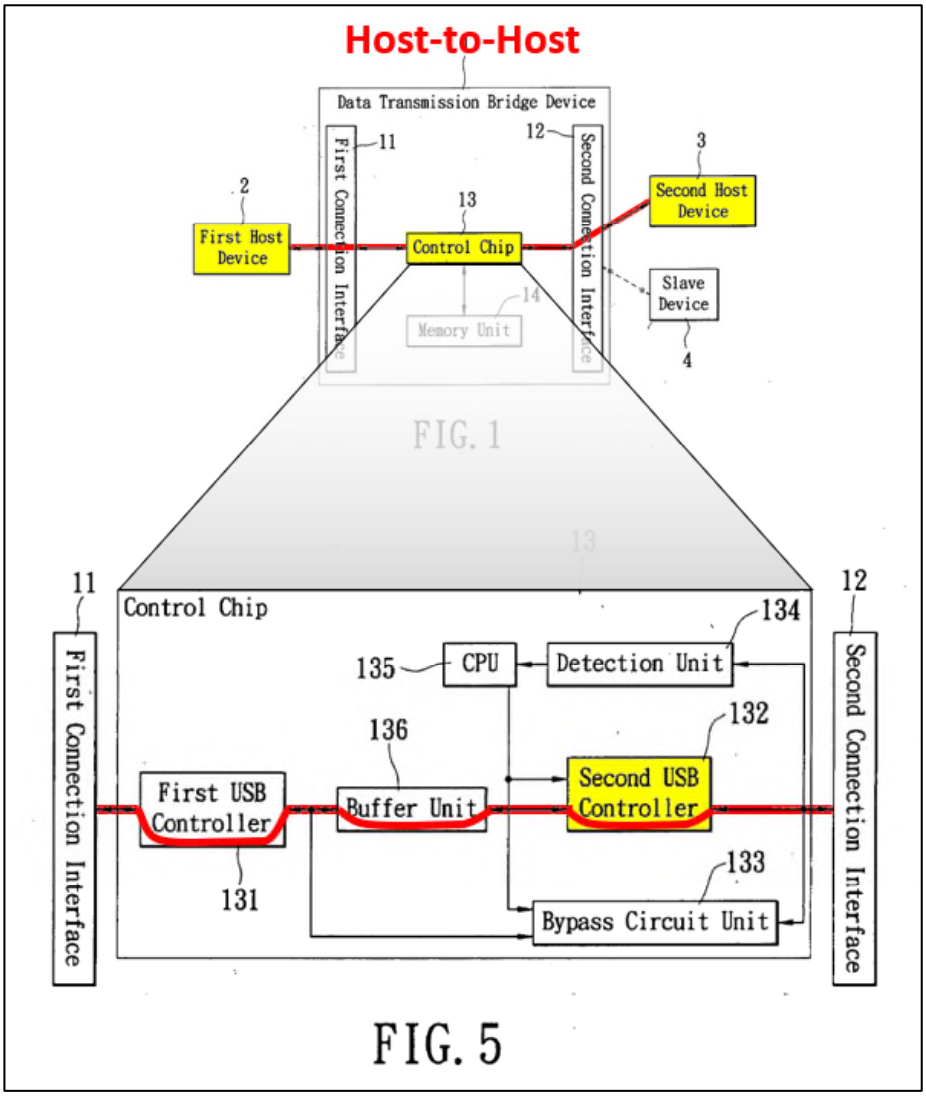

EX1015 (Chang II), Figs. 1, 5 (annotated).

162. As shown below (in purple), "*[t]he second path is the bypass path which spans first connection interface 11, first USB controller 131, bypass circuit unit 133, and second connection interface 12*." EX1015 (Chang II), [0023]. Chang II explains that "*the bypass circuit unit will directly connect the first USB controller and the second connection interface, in order to provide host-slave operation*

Microchip Ex. 1013, p. 78
Microchip v. Aptiv
IPR2024-00228

Aptiv Exhibit 2011 Page 78
Microchip v. Aptiv IPR2024-00229

DocuSign Envelope ID: 21006CD8-3A89-44EF-9ECF-DF7EDF8B0033

between the first host device and the slave device." *Id.*, [0013]; *see also id.*, [0037] (describing "*a direct connection between the first USB controller 131 and the second connection interface 12*").

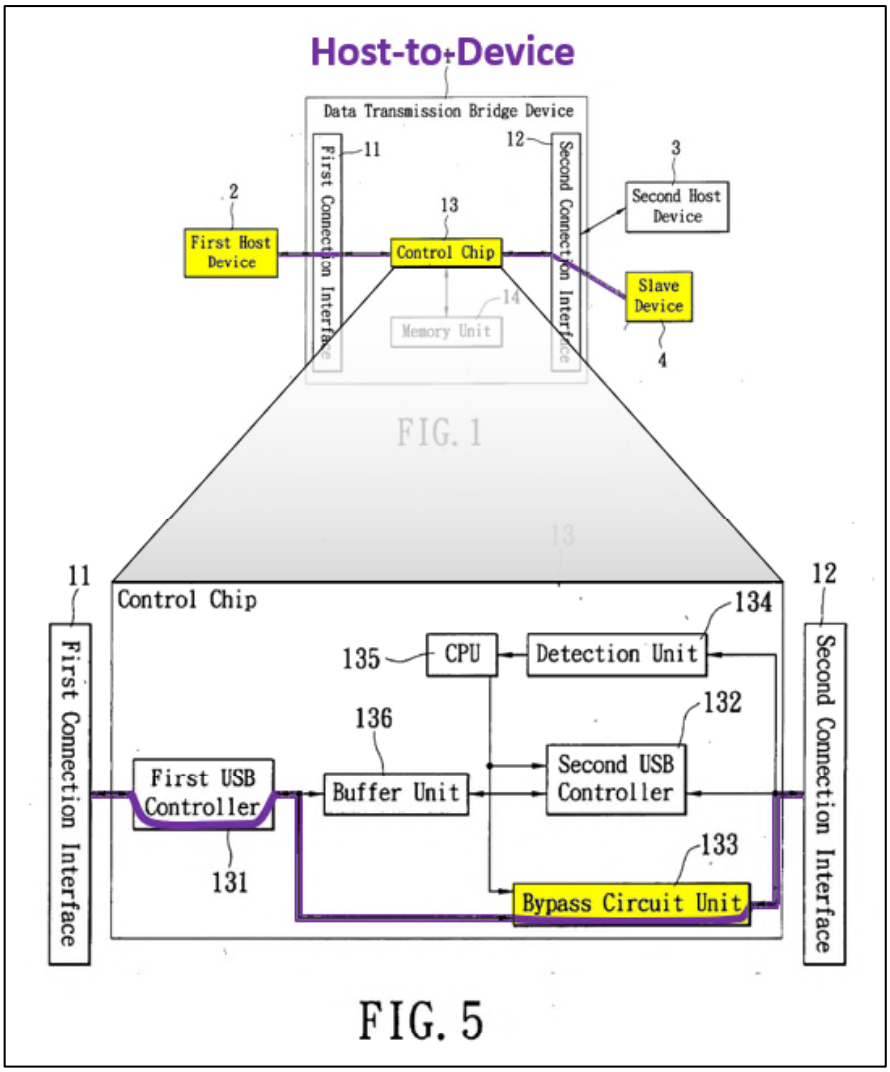

Id., Figs. 1, 5 (annotated).

163. Notably, Chang II discloses that, when in host-to-device mode, the "*data transmission bridge device*" acts "*similar[ly] to the commonly known USB*

Microchip Ex. 1013, p. 79
Microchip v. Aptiv
IPR2024-00228

Aptiv Exhibit 2011 Page 79
Microchip v. Aptiv IPR2024-00229

DocuSign Envelope ID: 21006CD8-3A89-44EF-9ECF-DF7EDF8B0033

HUB function." EX1015 (Chang II), [0027]; *see also id.*, [0040] ("*the control chip 13 at this time* ***functions like a USB Hub chip****, merely acting with intermediate transmission function*") (emphasis added). In this case, the transmission functions like a hub that connects an upstream host to the downstream device.

164. The CPU 135 performs a switching function: "*the detection signal will be received by the CPU, and the CPU will accordingly control the second USB controller (host to host data transfer) or the bypass circuit unit (host to slave data transfer) for the appropriate operation*." EX1015 (Chang II), [0013]; *see also id.*, [0023] ("*switching to one of the two transmission paths*"); [0038] (CPU setting transmission path). Chang II discloses deploying the relevant circuitry to switch transmission paths. *Id.*, [0039]-[0040].

165. To implement these different transmission paths, a POSITA would have understood that some type of USB switch, mux or crossbar would be required. Chang II's "*Second Connection Interface*" links to a consumer product and would have been understood to be some type of connector. As I discuss above, this connector has one set of USB data lines (D+ and D-) and a POSITA would have understood that those signals, as shown in Fig. 5, would have to be "routed" either to the Second USB Controller (132) or the Bypass Circuit Unit (133). Put another way, because the Second Connection Interface connects to both the Second USB Controller and the Bypass Circuit Unit, only one of these connections can be active

Microchip Ex. 1013, p. 80
Microchip v. Aptiv
IPR2024-00228

Aptiv Exhibit 2011 Page 80
Microchip v. Aptiv IPR2024-00229

DocuSign Envelope ID: 21006CD8-3A89-44EF-9ECF-DF7EDF8B0033

at the same time or there would be significant risk of signal interference. A POSITA would have understood that Chang II would disconnect the unique portions of the path that is not chosen (*e.g.*, when connecting a host to a device, it would be understood the line from the second interface to the second controller would not be a logically active signal line.). A switch, *e.g.*, a mux, performs this same connect/disconnect function. Accordingly, Chang II would have been understood to disclose (and certainly render obvious) a switch, even though Chang II does not expressly describe structure of a switch or logic to connect the appropriate lines.

166. A critical feature of Chang II is its "*main feature*" of "*the provision of two different transmission paths, so that by automatically detecting the type of device connected (host or slave) the present invention can switch to the proper transmission path*." EX1015 (Chang II), [0021]. The fundamental concepts of (1) detecting the host/device type and (2) selecting/switching between two transmission paths are repeated throughout the specification:

- There are "***two transmission paths**; the control chip is for **detecting the device** connected with the second connection interface, and accordingly **decide on one of the two transmission paths to use** for the data transmission*." *Id.*, [0012] (emphasis added).
- "*[A] detection of whether the type of external device is the second host device 3 or slave device 4 can be made [so] the proper transmission path can be switched to accordingly*." *Id.*, [0045].

Microchip Ex. 1013, p. 81
Microchip v. Aptiv
IPR2024-00228

Aptiv Exhibit 2011 Page 81
Microchip v. Aptiv IPR2024-00229

DocuSign Envelope ID: 21006CD8-3A89-44EF-9ECF-DF7EDF8B0033

- When "*connected to a second host device, the second USB controller … **form[s] a bridge for data transfer between the second host device and the first USB controller**" and when "connect[ed] with a slave device, **the bypass circuit unit will directly connect the first USB controller … to provide host-slave operation**.*" *Id*., [0013] (emphasis added). "*[T]he detection unit will automatically operate to [detect host/device and provide a] detection signal … [to access] the second USB controller (host to host data transfer) or the bypass circuit unit (host to slave data transfer)*." *Id*.

***

167. Chang II discloses that its bridge device may be built into a data transmission cable (*see* EX1015 (Chang II), Fig. 3) or "*directly within a first host device*" such as a notebook computer. *Id.*, [0031], Fig. 4. In view of this disclosure, a POSITA would have understood (or at least have found it obvious) that the bridge may work in conjunction with (or be integrated with) a hub. Chang II expressly discloses that when connecting a host to a device, the transmission bridge functions like a USB Hub. *Id.*, [0040]. Chang II's teaching are not only compatible with a hub, but these teachings expressly suggest its application to a hub. *Id*., [0012]-[0013], [0027].

168. In summary, Chang II discloses "*a data transmission bridge device, which by automatically detecting the type of connected device to switch between the proper transmission path, can not only support data transmission between a host device and a slave device, but can also directly support data transmission between two host devices*." EX1015 (Chang II), [0046].

Microchip Ex. 1013, p. 82
Microchip v. Aptiv
IPR2024-00228

Aptiv Exhibit 2011 Page 82
Microchip v. Aptiv IPR2024-00229

DocuSign Envelope ID: 21006CD8-3A89-44EF-9ECF-DF7EDF8B0033

C. Chutorash Summary

169. Chutorash is titled "*Vehicle User Interface Systems and Methods*." Chutorash recognizes that "*[v]ehicles typically include a number of electronics systems and subsystems*" such as "*an in-vehicle entertainment system*," but such systems "*typically do not interface well with remote sources and portable devices such as cellular phones*." EX1029 (Chutorash), 1:20-28. As such, there exists "*a need for improved user interface features and/or connectivity features relating to vehicle control systems, remote sources, and/or portable devices*." *Id.*, 1:34-36.

170. Chutorash discloses a "*vehicle control system 106 (e.g., media system, navigational system, entertainment system, display system, communications systems, etc.)*" connected to "*a portable electronic device 116*" as shown in Figs. 1 and 3 below. EX1029 (Chutorash), 5:31-33, 6:51-7:10. The "*portable electronic device 116 can provide information to vehicle control system 106 for processing*." *Id.*, 7:8-10.

Microchip Ex. 1013, p. 83
Microchip v. Aptiv
IPR2024-00228

Aptiv Exhibit 2011 Page 83
Microchip v. Aptiv IPR2024-00229

DocuSign Envelope ID: 21006CD8-3A89-44EF-9ECF-DF7EDF8B0033

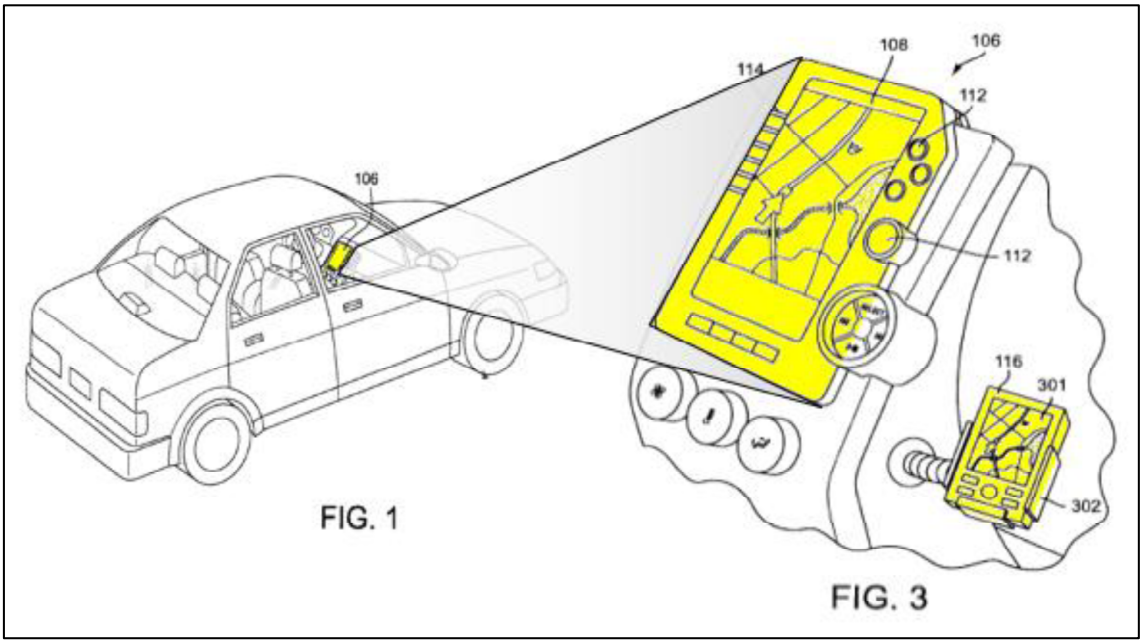

Id., Figs. 1, 3 (annotated).

171. Chutorash discloses "*various embodiments for a vehicle control system connecting via a USB interface to various remote sources*" in Figs. 27-30. EX1029 (Chutorash), 27:1-3. In particular, Chutorash's vehicle control system 106 includes "*a USB connector or interface 2728, 2744*" that "*is provided within vehicle 100*." *Id.*, 27:4-10; *see also id.*, 27:7-10 ("*The USB interface may be embedded in vehicle control system 106 (interface 2728) or … coupled to vehicle control system 106 (interface 2744)*."). These USB interfaces (with "*mobile phone 2734," "PDA 2746," and "media player 2752*" connected to them) are illustrated in Fig. 27 below. The availability of USB ports in vehicle 100 is unsurprising given that vehicle control and entertainment system 106 is essentially a built-in computer that "*could be classified as an embedded host*." *Id.*, 27:26-28.

Microchip Ex. 1013, p. 84
Microchip v. Aptiv
IPR2024-00228

Aptiv Exhibit 2011 Page 84
Microchip v. Aptiv IPR2024-00229

DocuSign Envelope ID: 21006CD8-3A89-44EF-9ECF-DF7EDF8B0033

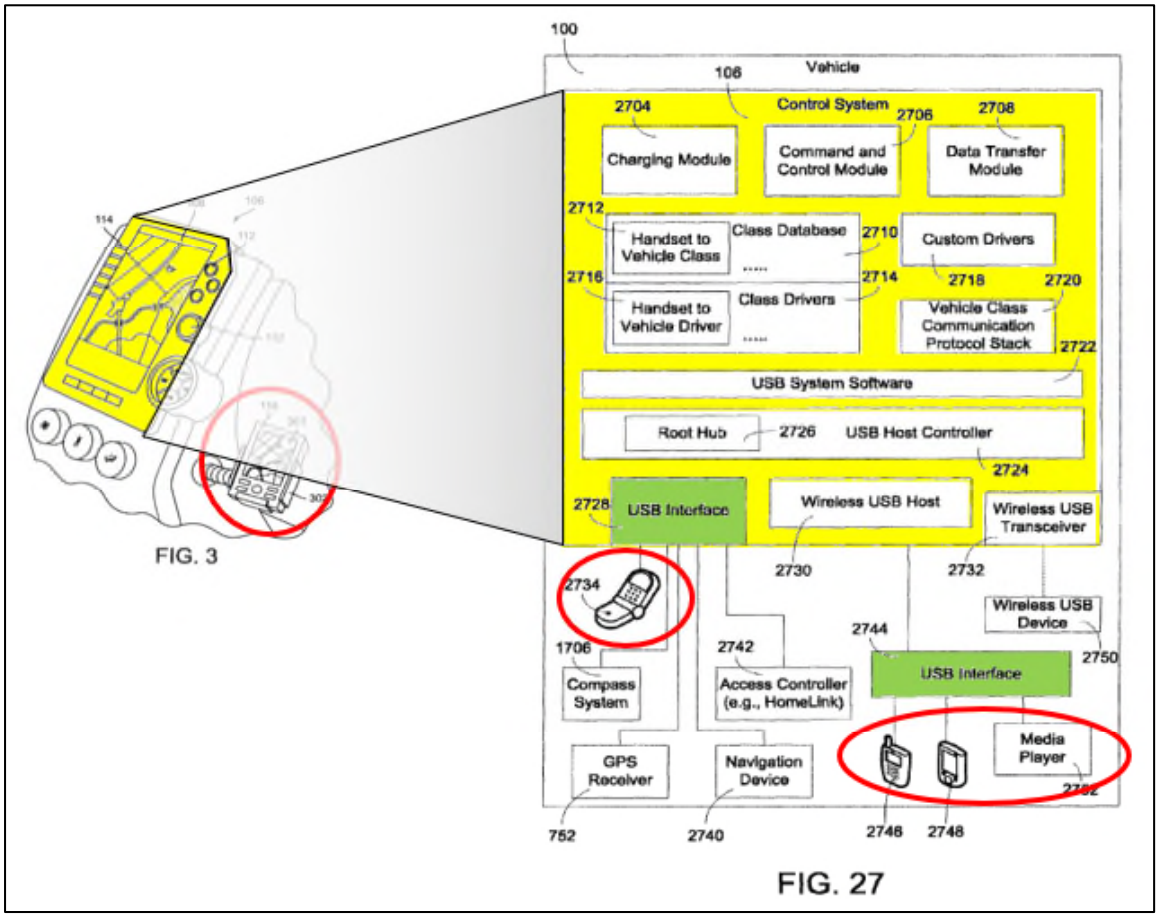

Id., Figs. 3, 27 (annotated).

172. The "*USB interface 2728, 2744 may facilitate operative connection of a mobile phone 2734*." EX1029 (Chutorash), 27:12-25. The "*[v]ehicle control system 106 may use the USB interface 2728 and/or features for charging,* ***command and control****, and/or data transfer*." *Id.* (emphasis added); *see also id.*, 13:22-24. For example, "*[v]ideo services 724 of the portable device 116 may be utilized by vehicle control system 106 to provide video decoding and/or playback features to the vehicle*." *Id.*, 14:40-53; *see also id.*, 14:62-67.

DocuSign Envelope ID: 21006CD8-3A89-44EF-9ECF-DF7EDF8B0033

173. "*USB Interface[s]*" 2728 and/or 2744 would be USB hubs because each has multiple products connected to it. As I discuss in §VI.A.2, a hub has an upstream port and multiple downstream ports, which is the function that USB Interfaces 2728 and 2744 are shown to perform.

D. AN96527 Summary

174. AN96527 is a Cypress application. EX1064, 1. Cypress Semiconductor has existed for decades and was a well-known semiconductor company in the industry. Among other products, Cypress offered various USB products, components, and solutions. Like other tech companies, Cypress had a public website that a POSITA would have been aware of and could readily have located AN96527. AN96527 discusses "*the USB-IF Type-C Specification and the Power Delivery Specification and how they can be designed into practical products*" (EX1064, 1), including USB hubs (*id.*, 4, 25-26). This application note would have been used (in the context of the USB-PD (EX1020) and USB-C (EX1019) specifications), by POSITAs to assist in implementing this product into a larger system. The application note explains that Power Delivery Specification enables "*power delivery [to] be negotiated*" (*e.g.*, variable voltage and current) between a hub and downstream product. EX1064, 6; EX1020, 36-37. The practical use of this was that downstream products could operate at different power levels and when higher power for charging (or other purposes) was necessary, it was possible to negotiate a higher power draw.

Microchip Ex. 1013, p. 86
Microchip v. Aptiv
IPR2024-00228

Aptiv Exhibit 2011 Page 86
Microchip v. Aptiv IPR2024-00229

DocuSign Envelope ID: 21006CD8-3A89-44EF-9ECF-DF7EDF8B0033

IX. MOTIVATION TO MODIFY CHANG IN VIEW OF CHANG II AND THE KNOWLEDGE OF A POSITA

175. As I describe in §VIII.A, Chang discloses an enhanced USB hub with several standard downstream device ports (44) and a special purpose downstream port (50) that supports a connection to a USB host via a host-to-host bridge. For several reasons, a POSITA would have been motivated to modify Chang in view of Chang II and the knowledge of a POSITA to replace one or more of Chang's downstream ports with dual-role ports and include a switch to route each port to the appropriate transmission path.

176. **First**, the industry growth of dual-role products leading up to 2013 (the priority date of the Challenged Patents[8]) would have motivated a POSITA to replace the downstream ports with dual-role ports. Including dual-role ports would effectively modernize Chang in line with the industry adoptions of dual-role consumer USB products. There was rapid growth of consumer products (*e.g.*, smartphones) with dual-role USB capabilities before 2013, and the specification of the Challenged Patents recognizes this fact. EX1003 ('420 patent), 2:38-3:3; *see also* §VI.B. The specification also admits that manufacturers that deploy USB systems, *e.g.*, automobile manufacturers, were "*motivated to adapt to this changing technology*," *i.e.*, adapt the USB systems to support USB products that either present

[8] Some claims have a later priority date. *See* ¶¶44, 109, and 123.

Microchip Ex. 1013, p. 87
Microchip v. Aptiv
IPR2024-00228

Aptiv Exhibit 2011 Page 87
Microchip v. Aptiv IPR2024-00229

DocuSign Envelope ID: 21006CD8-3A89-44EF-9ECF-DF7EDF8B0033

as host or device or that dynamically switch between host and device modes. EX1003 ('420 patent), 3:8-67. Also, the industry had recognized this need to support dual-role products even before Chang I, and the USB-IF promulgated a standard beginning in 2001 (the OTG Supplement) for this very purpose. *See supra* §VI.B.

177. **Second**, dual-role ports that could attach to dual-role products had several common-sense benefits. It would be impractical and contrary to the goals of the USB specifications, to require consumers that use dual-role products to understand when to switch connections between a dedicated host port (*e.g.*, Chang's port 50) and a dedicated device port (*e.g.*, Chang's port 44). The consumer would not necessarily know when to connect the product to the appropriate port. At the very least, it would be inconvenient for the consumer to have to disconnect and reconnect the product to different ports. Further, dual-role ports save costs. Dedicated ports have "*a disadvantage in that it requires multiple connectors, multiple ASIC pins and the like*," which adds "*overhead*" and "*increase[s] the cost[s]*." EX1025 (Castleberry), 1:38-43; *see also* EX1022, §1.1 ("*An OTG product is a portable device that uses a single Micro-AB receptacle (and no other USB receptacles) to operate at times as a USB Targeted Host and at times as a USB peripheral*."). Dual-role ports reduce the cost and number of necessary ports relative to dedicated device and host ports.

Microchip Ex. 1013, p. 88
Microchip v. Aptiv
IPR2024-00228

Aptiv Exhibit 2011 Page 88
Microchip v. Aptiv IPR2024-00229

DocuSign Envelope ID: 21006CD8-3A89-44EF-9ECF-DF7EDF8B0033

178. **Third**, modifying Chang to include dual-role ports is consistent with Chang's goals. Chang seeks to achieve "*a device capable of easily establishing a connection between a computer and another computer*." EX1014 (Chang), [0003]. In the context of Chang's system, it partially accomplishes this by allowing a downstream host PC (70) to connect to upstream host PC (20) by plugging the downstream host into a hub port. *Id.*, [0002], [0020], [0023], Figs. 3-4. This works because the bridge is built into the system, two hosts can connect by simply connecting to the appropriate ports. But in the context of dual-role products, such as a smartphone, the problem with this partial solution is the use of a dedicated downstream host port. *Id.* As the specification of the Challenged Patents admits, prior art smartphones had effectively become like laptops or PCs, which usually act as host. EX1005, 2:66-3:3; EX1003, 2:62-66; EX1007, 2:64-3:1; EX1009, 2:65-3:2. The Challenged Patents acknowledge that USB OTG devices could dynamically operate as either host or device, and those devices could switch roles. EX1005, 3:25-27; EX1003, 3:22-24; EX1007, 3:24-26; EX1009, 3:25-27. *See* ¶8484. Android smartphones could dynamically switch host/device roles using a version of this scheme. Thus, connecting a smartphone to the dedicated downstream port would have the problem that the phone might act as either the USB host (as a computer) or USB device.

Microchip Ex. 1013, p. 89
Microchip v. Aptiv
IPR2024-00228

Aptiv Exhibit 2011 Page 89
Microchip v. Aptiv IPR2024-00229

DocuSign Envelope ID: 21006CD8-3A89-44EF-9ECF-DF7EDF8B0033

179. Chang's dedicated host port would not be compatible with the smartphone acting as a device and would require that the user switch to another port. With a dual-role port, the user would not have to know what mode the smartphone was operating in, and then switch the smartphone between the appropriate dedicated host or device port. When the smartphone acts as a computer (in host mode), all that is necessary is the connection to the dual-role port, which "*easily establish[es] a connection*" (EX1014 (Chang), [0005]) to the upstream host (through the bridge). Likewise, when the smartphone acts as a device, all that is necessary is the same physical connection to the dual-role port where a connection to the upstream host (that bypasses the bridge) would automatically be made. This avoids the inconvenience and confusion of consumers having to know the operating mode of the smartphone and manually switching to the appropriate port (and knowing the appropriate port for each mode). *E.g.*, EX1022, §1.1 (prior art receptacles for this very purpose). Providing dual-role ports is further consistent with Chang's express disclosure of providing a host-to-host connection, which enables the benefits of having a host connected on the downstream port (*e.g.*, using a familiar UI on a smartphone).[9] *See* §VIII.A. Accordingly, a POSITA would have been motivated to

[9] A real-world example would be using a preferred smartphone app to select/play music on speakers connected to the upstream host.

Microchip Ex. 1013, p. 90
Microchip v. Aptiv
IPR2024-00228

Aptiv Exhibit 2011 Page 90
Microchip v. Aptiv IPR2024-00229

DocuSign Envelope ID: 21006CD8-3A89-44EF-9ECF-DF7EDF8B0033

include a dual-role port (or ports) in view of Chang's express goal of providing easy connections.

180. In the vehicle deployment context (*see* §VI.D), this convenient host-to-host connection was particularly suitable because the vehicle's upstream host was often embedded in a component of the vehicle (*e.g.*, head unit / infotainment system), thus requiring a host-to-host connection when the downstream consumer product, *e.g.*, smartphone, operates as host. *See* EX1029 (Chutorash), 27:26-29 ("*embedded host*"), EX1049 (describing how cars had "*become a PC on wheels*").

181. **Fourth**, a POSITA would have been motivated to additionally consider Chang II for improving Chang because Chang II includes a motivation to use its teachings in the context of hubs. Chang II discloses that, when providing for a host-to-device connection, the data transmission bridge device acts "*similar[ly] to the commonly known USB HUB function*." EX1015 (Chang II), [0027]; *see also id.*, [0040] ("*the control chip 13 at this time* ***functions like a USB Hub chip****, merely acting with intermediate transmission function*") (emphasis added). Chang II refers to the "*intermediate transmission function*" that is similar to the Hub function because its operation here is akin to a hub that transmits host communication downstream to a device and vice versa. A POSITA would have understood that Chang II's teachings are thus particularly suitable in the context of a hub.

Microchip Ex. 1013, p. 91
Microchip v. Aptiv
IPR2024-00228

Aptiv Exhibit 2011 Page 91
Microchip v. Aptiv IPR2024-00229

DocuSign Envelope ID: 21006CD8-3A89-44EF-9ECF-DF7EDF8B0033

182. A POSITA would have had a high expectation of success in modifying Chang to include dual-role ports for several reason.

183. **First**, dual-role ports and detection circuity to determine whether the downstream product is in host or device mode were well-known and well understood. §VI.B.1. In addition to actual commercial products, contemporaneous prior art references showed how to implement a dual-role port, including the associated mode detection. *See* EX1025 (Castleberry), 3:10-32, 3:40-4:8, 7:34-40; and EX1052 (Wang), 3:21-50. Consistent with this, the Challenged Patents recognize that several solutions for supporting dual-role ports in a USB system were readily available. EX1005 ('962 patent), 3:21-59.

184. **Second**, Chang provides a roadmap to implement dual-role ports and the necessary switching with little modification. Importantly, Chang already discloses separate transmission paths for a host-to-host connection ("host-to-host transmission path 54") and host-to-device connections ("transmission paths 48"):

Microchip Ex. 1013, p. 92
Microchip v. Aptiv
IPR2024-00228

Aptiv Exhibit 2011 Page 92
Microchip v. Aptiv IPR2024-00229

DocuSign Envelope ID: 21006CD8-3A89-44EF-9ECF-DF7EDF8B0033

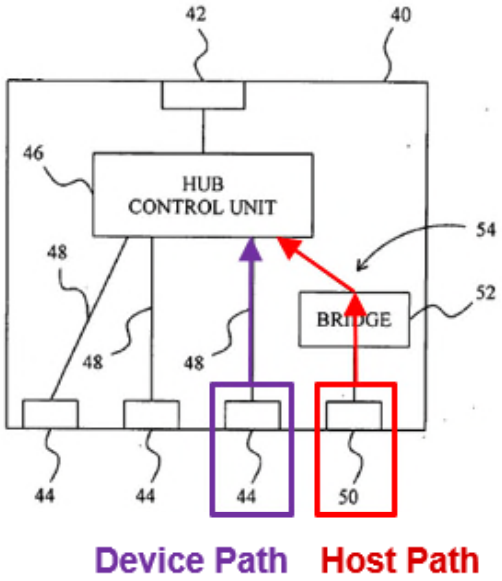

EX1014 (Chang), Fig. 3 (annotated), [0019]-[0020]. A dual-role mode port would require detecting the mode of the product (*viz.*, using signal detection circuitry) and switching functionality to select the appropriate path based on the detected mode.

185. **Third**, it was already well-known to include switching and detection functionality to select the appropriate transmission path for dual-role devices depending on the consumer unit's operating mode, *i.e.*, a path such as the "host-to-host transmission path 54" or the "transmission paths 48." §§VI.B, VI.B.1, and VI.B.2; *see also* EX1053 (Sakaki), Fig. 1, [0031]-[0034] (switching data line connections based on host or device mode detection); EX1052 (Wang), Fig. 1, 3:7-20 (describing "*switching structure 170*" to control data paths depending on operating mode); EX1017 (Hesse), Fig. 6, [0057] (connecting ports to different port routers depending on unit's configuration). Accordingly, in the context of Chang, a

Microchip Ex. 1013, p. 93
Microchip v. Aptiv
IPR2024-00228

Aptiv Exhibit 2011 Page 93
Microchip v. Aptiv IPR2024-00229

DocuSign Envelope ID: 21006CD8-3A89-44EF-9ECF-DF7EDF8B0033

POSITA would have been motivated to implement dual-role ports by including detection circuitry (*e.g.*, a voltage divider or other means as discussed in §VI.B.1) and a switch (*e.g.*, multiplexer or crossbar) that connects the dual-role port(s) directly to the hub's upstream port (when the consumer product is configured as a device, *i.e.*, path 48) or to the hub through the bridge (when the consumer product is configured as host, *i.e.*, path 54).

186. **Fourth**, Chang discloses a bridge (including referencing commercial bridge chips) but does not detail the bridge. EX1014 (Chang), [0020]. Chang II, however, discloses its bridge in significant detail, including detection and switching functionality. *E.g.*, EX1015 (Chang II), Figs. 1-2 and 5. This would both motivate a POSITA to consider Chang II teachings and as I explain here, provide a high expectation of success in modifying Chang.

187. **Fifth,** the USB context of the dual-role ports, switches, device type detection, etc. of the Chang/Chang II combination were quite straightforward to test and verify. At the time of the filing of the Challenged Patents, there were already existing USB hosts, both in and out of vehicles, and numerous USB devices intended to function with those hosts, including dual-role devices such as smartphones. To test a dual-role USB port a POSITA only has to configure the existing USB host to expect such a device and to plug in the target device to verify that it works. In addition to verifying the device connection functionally, there were numerous tools

Microchip Ex. 1013, p. 94
Microchip v. Aptiv
IPR2024-00228

Aptiv Exhibit 2011 Page 94
Microchip v. Aptiv IPR2024-00229

DocuSign Envelope ID: 21006CD8-3A89-44EF-9ECF-DF7EDF8B0033

such as USB analyzers (www.totalphase.com/company/press/2005/beagle-usb12-launch/) that showed not only the USB data traffic but also the state of the connection. These tools would add to the functional test and demonstrate that the USB specification was followed. Accordingly, a POSITA would have known that verifying the combined Chang and Chang II teachings would be simple.

188. Chang II provides examples of switching for either a host- or device-product[10] in the context of using a bridge: "*the main feature is the provision of two different transmission paths, so that by automatically detecting the type of device connected (host or slave) the present invention can switch to the proper transmission path, thus not only can host-slave operation between the host device and the slave device be supported, but direct bridging between two host device for data transfer is also possible*." EX1015 (Chang II), [0021]. Thus, Chang II uses "*switch[ing]*" to either connect the consumer port (and corresponding product) to a "*bridge*" transmission path (when the product is a host) or a "*bypass*" path (when the product is a device). *Id*., Figs. 1, 5, [0013]. With reference to Fig. 5, it can be seen that the output of USB Controller 131 is shared between the host and device paths. This is possible because, at no time, will both paths be active and create a conflict on the

[10] It would have been understood (and at least obvious) that connecting a dual-role product to the second interface was within the scope of Chang II's disclosure. ¶157.

Microchip Ex. 1013, p. 95
Microchip v. Aptiv
IPR2024-00228

Aptiv Exhibit 2011 Page 95
Microchip v. Aptiv IPR2024-00229

DocuSign Envelope ID: 21006CD8-3A89-44EF-9ECF-DF7EDF8B0033

shared wire. At all times, one path will be left floating (*e.g.*, tri-stated). This achieves the same functionality as a switch (*e.g.*, a mux) and is typical when multiple signal lines connect to a common node (this prevents interference that can corrupt signals).

189. Chang II also details detection functionality with a "*detection unit 134*" that is part of the bridge's "*control chip*." EX1015 (Chang II), Figs. 1, 5, [0034]. Chang II refers to an "*inquire*" signal as part of its detection functionality. The detection unit detects the connection of a host or device by (1) sending an "*inquire signal*" and receiving a response (when a host connects) or (2) receiving an "*inquire signal*" (when a device connects). *Id.*, [0038]-[0040]. The detection unit then produces either a "*bridging detection signal*" (after detecting a host) or "*slave detection signal*" (after detecting a device). *Id.* These "*inquire signal[s]*" refer to the Host/Device Detection techniques that I discuss in §VI.B.1.

190. Putting these teachings together, Chang II discloses that the bridging detection signal causes the switching to the appropriate transmission "*path*" (to use the bridge or to bypass the bridge). EX1015 (Chang II), [0042]-[0044]. Accordingly, a POSITA would have been motivated, with a high expectation of success, to route the dual-role ports (and products attached thereto) to the appropriate path using a detection circuit and a switch.

Microchip Ex. 1013, p. 96
Microchip v. Aptiv
IPR2024-00228

Aptiv Exhibit 2011 Page 96
Microchip v. Aptiv IPR2024-00229

DocuSign Envelope ID: 21006CD8-3A89-44EF-9ECF-DF7EDF8B0033

191. Two obvious implementations for modifying Chang Fig. 3 are shown below. The implementation at left includes a 2:1 multiplexer (green) and one dual-role port (yellow). The implementation at right includes a crossbar switch (green) and three dual-role ports (yellow).

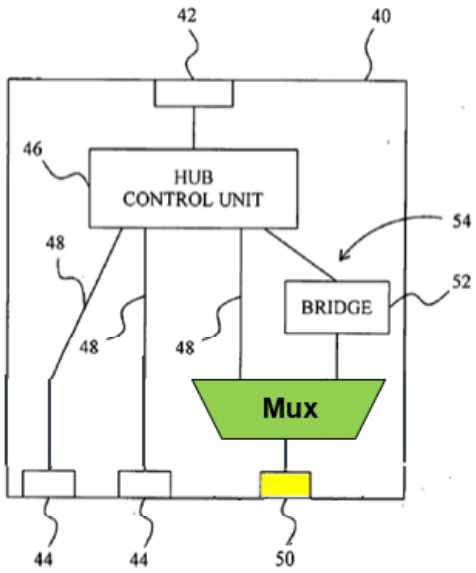

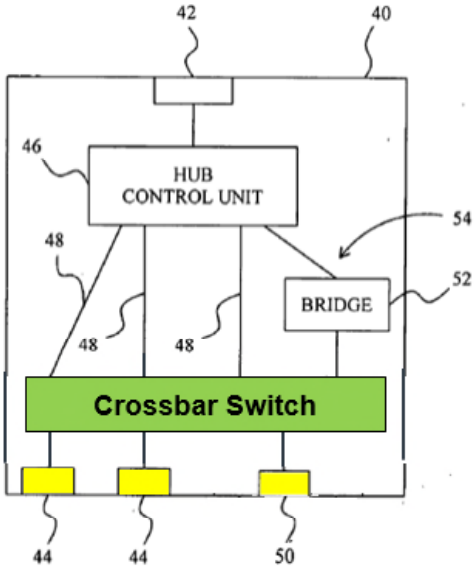

EX1014 (Chang), Fig. 3 (modified and annotated). The primary functional difference is that the "Mux Implementation" (left) only supports a host-to-host connection through port 50 whereas the "Crossbar Implementation" (right) supports a host-to-host connection through any of ports 44 or 50. In this example, with one bridge, only one host-to-host connection at a time is possible.

192. As I describe above, detection circuitry is necessary to detect the mode of the dual-role product, which then causes selection of the appropriate path. An

Microchip Ex. 1013, p. 97
Microchip v. Aptiv
IPR2024-00228

Aptiv Exhibit 2011 Page 97
Microchip v. Aptiv IPR2024-00229

DocuSign Envelope ID: 21006CD8-3A89-44EF-9ECF-DF7EDF8B0033

example deployment of a detection unit (*e.g.*, in view of Chang II) is shown in the Mux Implementation:

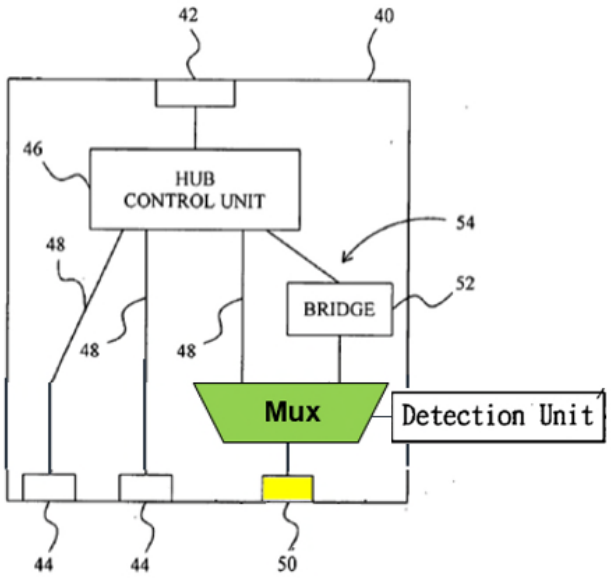

EX1014 (Chang), Fig. 3 (modified and annotated).

193. This detection circuitry could be deployed in several obvious ways. In the example above it is associated with the mux. In another obvious example, it could be separate and between the dual-role port 50 and mux. This location is obvious because it is the first place a signal from a downstream USB product arrives. In a third obvious location, it could be located in the bridge to take advantage of existing logic and circuitry to, for example, process the output of the detection circuit in a manner similar to Chang II's CPU 135 (EX1015 (Chang II), [0038], Fig. 5). It would have been routine and obvious for the bridge and/or the detection unit to

Microchip Ex. 1013, p. 98
Microchip v. Aptiv
IPR2024-00228

Aptiv Exhibit 2011 Page 98
Microchip v. Aptiv IPR2024-00229

DocuSign Envelope ID: 21006CD8-3A89-44EF-9ECF-DF7EDF8B0033

control the switching functionality. For example, as I describe above, Chang II's bridge includes a "*detection unit*" (in the control chip) that detects the mode of the downstream product for selection of the appropriate transmission path. *Id.*, [0022]-[0023], [0034]. The above illustrates the detection unit connected to the mux to show that host/device detection ultimately controls the mux's select line. Additionally, the detection unit must connect to the downstream port to detect the mode, as shown in Chang II. *Id.*, Fig. 5.

194. A POSITA would have been motivated, with a high expectation of success, to implement the crossbar switch so that each downstream port is a dual-role port. Implementing all downstream port as dual-role ports would increase user convenience because users would not need to know which port was a dual-role port and suitable for, *e.g.*, a smartphone. In addition, dual-role ports reduce footprint, because again instead of two ports a single dual-role port in each place can be used.

195. It was well known to include multiple dual-role hub ports. For example, Overtoom discloses a vehicle entertainment system with a hub that includes five dual-role ports (202):

Microchip Ex. 1013, p. 99
Microchip v. Aptiv
IPR2024-00228

Aptiv Exhibit 2011 Page 99
Microchip v. Aptiv IPR2024-00229

DocuSign Envelope ID: 21006CD8-3A89-44EF-9ECF-DF7EDF8B0033

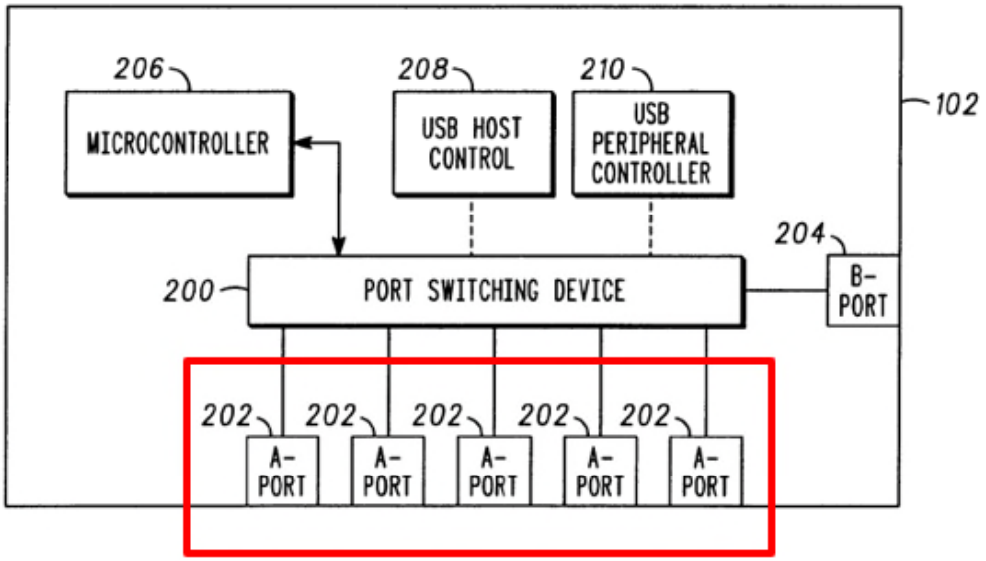

FIG. 2

EX1016 (Overtoom), Fig. 2 (annotated), [0024], [0027] (units through ports 202 may act as device or host), [0005] (A- type ports start as host).

196. U.S. Pub. 2006/0195625 ("Hesse," EX1017) discloses multiple downstream ports that may operate in different modes:

Microchip Ex. 1013, p. 100
Microchip v. Aptiv
IPR2024-00228

Aptiv Exhibit 2011 Page 100
Microchip v. Aptiv IPR2024-00229

DocuSign Envelope ID: 21006CD8-3A89-44EF-9ECF-DF7EDF8B0033

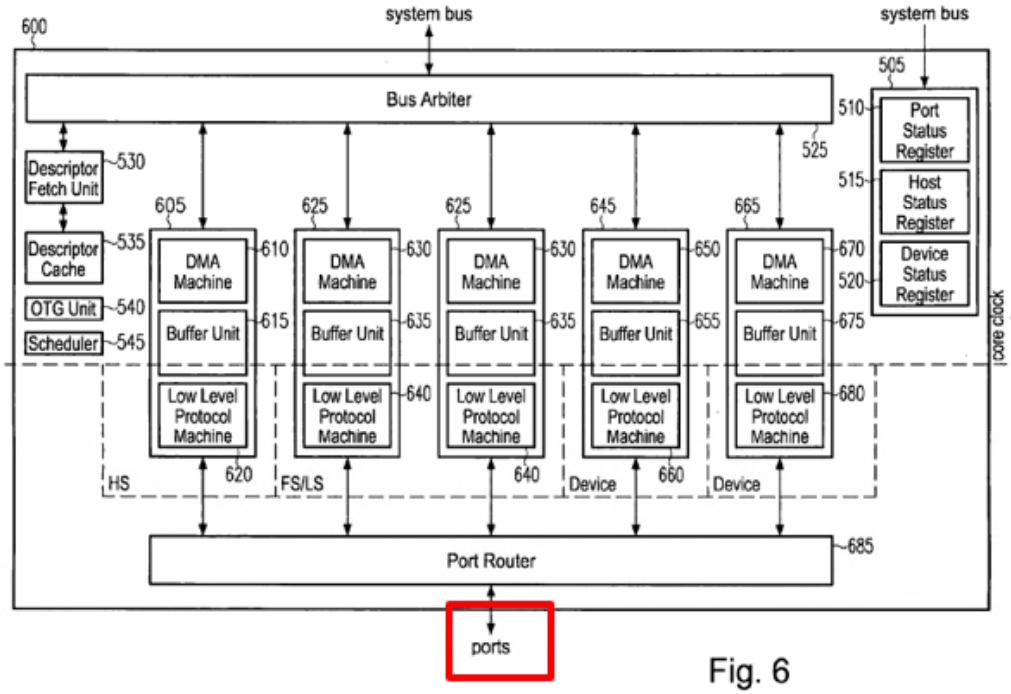

Fig. 6

Id., Fig. 6 (annotated), [0055]-[0056] (ports support "*high speed (HS) host mode*," "*device modes*," etc.).

197. When multiple ports are dual-mode, it was well-known and obvious to a POSITA to include basic switching functionality to route each port to the appropriate transmission path. *See* §VI.B.2. One well-known solution was a crossbar switch that would route any port to any transmission path, *e.g.*, as Hesse discloses that "*Port Router*" may be a "*crossbar switch for assigning each physical port to the respective port handler*":

Microchip Ex. 1013, p. 101
Microchip v. Aptiv
IPR2024-00228

Aptiv Exhibit 2011 Page 101
Microchip v. Aptiv IPR2024-00229

DocuSign Envelope ID: 21006CD8-3A89-44EF-9ECF-DF7EDF8B0033

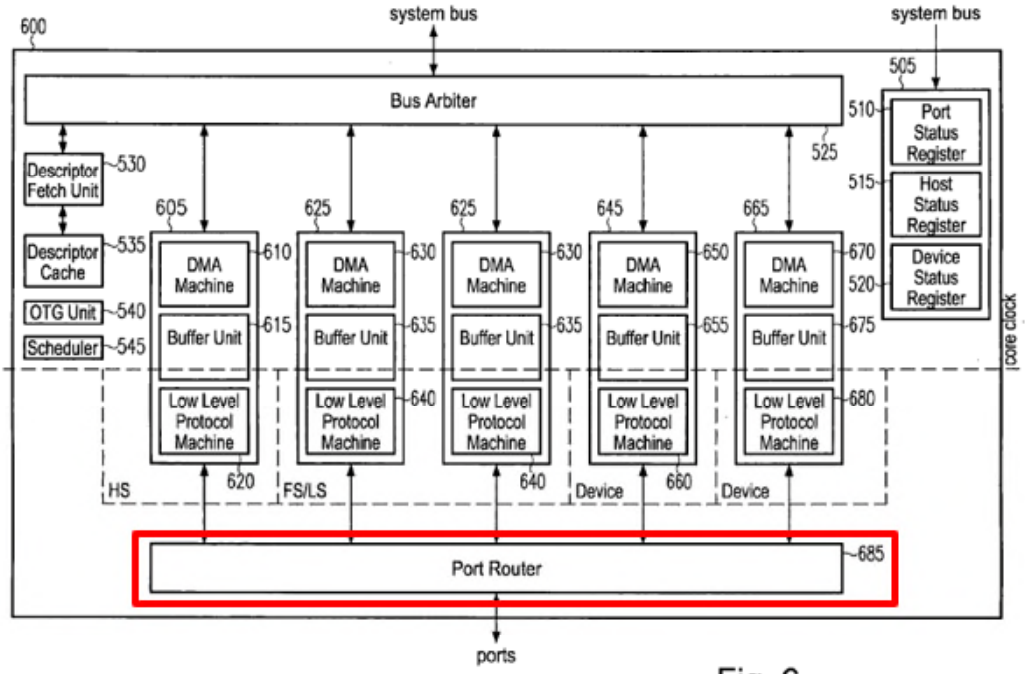

Fig. 6

EX1017 (Hesse), Fig. 6 (annotated), [0055]-[0057].

198. The Crossbar and Mux Implementations of Chang Fig. 3 come, respectively, in two variations, both of which are shown below.

Microchip Ex. 1013, p. 102
Microchip v. Aptiv
IPR2024-00228

Aptiv Exhibit 2011 Page 102
Microchip v. Aptiv IPR2024-00229

DocuSign Envelope ID: 21006CD8-3A89-44EF-9ECF-DF7EDF8B0033

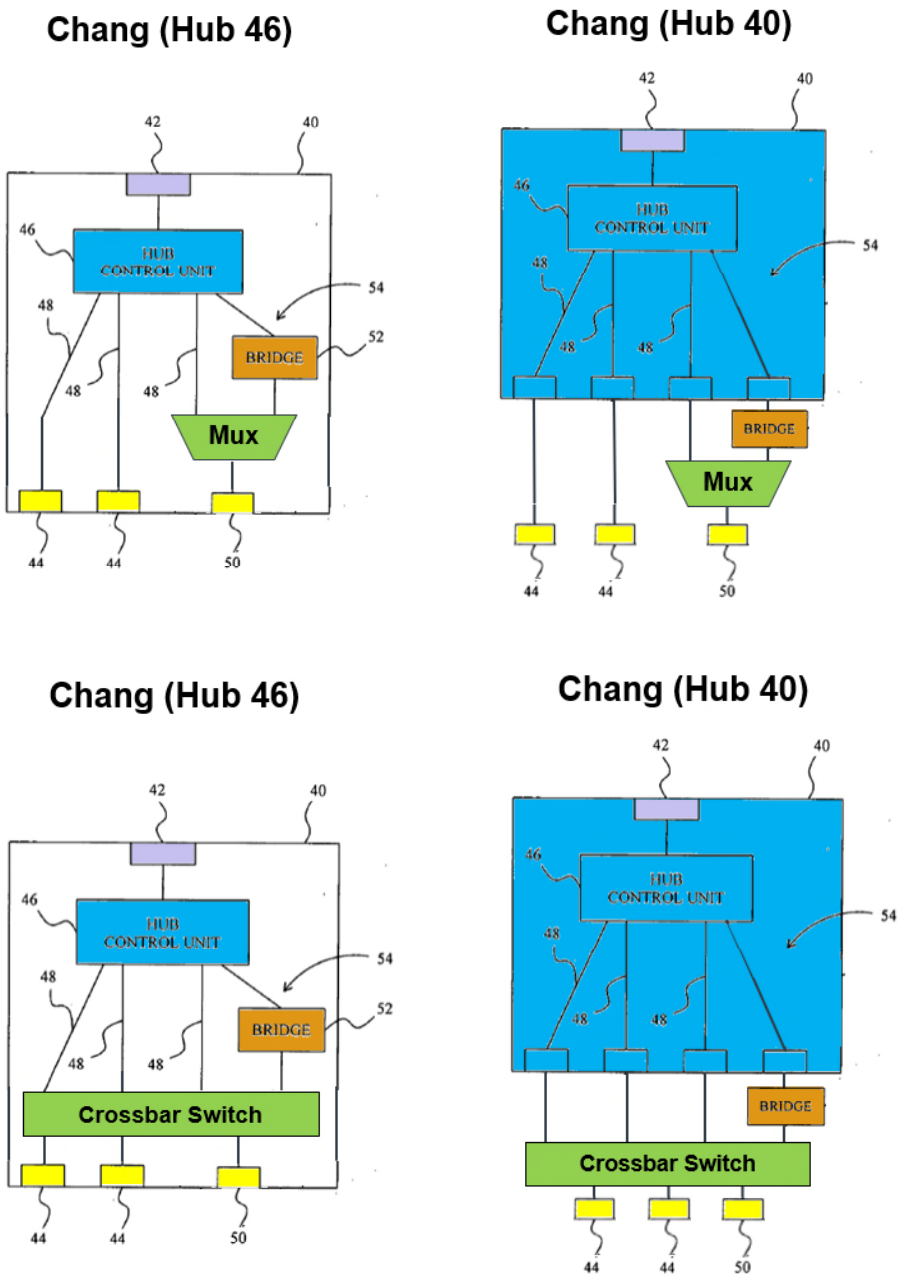

EX1014 (Chang), Fig. 3 (modified and annotated).

199. The lefthand version has the (1) bridge and (2) mux or crossbar inside hub 40. In the righthand version, the (1) bridge and (2) mux or crossbar are located

Microchip Ex. 1013, p. 103
Microchip v. Aptiv
IPR2024-00228

Aptiv Exhibit 2011 Page 103
Microchip v. Aptiv IPR2024-00229

DocuSign Envelope ID: 21006CD8-3A89-44EF-9ECF-DF7EDF8B0033

outside hub 40.[11] For reasons that I explain in my Unpatentability Analysis, I refer to these as "Chang (Hub 46)" and "Chang (Hub 40)," respectively.

200. The placement of the (1) bridge and (2) mux or crossbar inside/outside of hub 40 is merely a design choice, and a POSITA would have been motivated, with a high expectation of success, to implement either depending on design considerations. There are only a few places in the system suitable for placement of these components, *e.g.*, inside the hub 40 enclosure or a larger enclosure that integrates hub 40 and another board including the switch and bridge.

201. As to placing the components outside hub 40, a POSITA would have understood that one benefit is enabling the use of a conventional off-the-shelf hubs, which likely would result in faster development and quicker time to market. In other words, a manufacturer would be able to simply order off-the-shelf hubs (and easily

[11] In the "Hub 40" version of the Mux Implementation, the figure depicts lines connecting the ports 44 to the hub 40. This is intended to reflect that the ports 44 can be connected via wires to allow a variety of different physical placements of the ports (*e.g.*, in the backseat of a vehicle), but the ports 44 can just as easily be located on the hub itself without any additional wiring. This is simply a design implementation based on the deployment context. More generally, the same is true for all of the ports 44 and 50 in both "Hub 40" implementations.

Microchip Ex. 1013, p. 104
Microchip v. Aptiv
IPR2024-00228

Aptiv Exhibit 2011 Page 104
Microchip v. Aptiv IPR2024-00229

DocuSign Envelope ID: 21006CD8-3A89-44EF-9ECF-DF7EDF8B0033

multi-source these hubs) rather than requiring procurement of custom hubs (or manufacturing custom hubs). The components outside of hub 40 would then simply connect to the conventional hub. For example, Chang II discloses a bridge and bypass outside of any hub (*e.g.*, connecting cable between hub port and consumer dual-role device). EX1015 (Chang II), Figs. 1, 3, [0023], [0029]. This allows for minimal modifications to legacy designs and easy sourcing of components (*e.g.*, the conventional hub).

202. As to integrating the components inside hub 40, one benefit would include a more compact design and overall lower manufacturing/assembly costs. Here, rather than hub 40 and a separate unit (*e.g.*, a separate board with bridge, switching, and detection circuitry) all that is necessary is integrating these additional components into hub 40 (*e.g.*, as Chang II discloses integrating multiple functional circuits into control chip 13, EX1015 (Chang II), Fig. 5). Such integration of additional components into hub 40 was routine. For example, Chang discloses that it is "*possible*" to integrate the bridge into the hub control unit and separately, one could "*integrate*" the bridge with a "*conventional hub*." EX1014 (Chang), [0022]. Moreover, Chang discloses adding host-to-host functionality to the hub "*merely by integrating or adding a bridge to a USB hub*" which "*does not require too many modifications on the current hub control unit*." *Id.*, [0024]. Thus, "*the derived cost*

Microchip Ex. 1013, p. 105
Microchip v. Aptiv
IPR2024-00228

Aptiv Exhibit 2011 Page 105
Microchip v. Aptiv IPR2024-00229

DocuSign Envelope ID: 21006CD8-3A89-44EF-9ECF-DF7EDF8B0033

is relatively low, while a multi-functional USB hub with a host-to-host transmission function is obtained." *Id*.

X. MOTIVIATION TO MODIFY CHANG IN VIEW OF CHANG II, CHUTORASH, AND THE KNOWLEDGE OF A POSITA

203. A POSITA would have been motivated, and had a high expectation of success, to additionally combine Chutorash because Chutorash provides an obvious deployment environment for the Chang/Chang II system. In particular, Chang, Chang II, and a POSITA's knowledge discloses a USB hub with a host-to-host bridge and one or more dual-role ports. *See* §IX. Chutorash discloses using a USB hub in a vehicle control/infotainment system. *See* §VIII.C. Accordingly, a POSITA would be motivated to apply Chutorash's teachings to Chang and Chang II.

204. Chutorash discloses a vehicle control/infotainment system with "*USB interfaces 2728, 2744*" that "*facilitate operative connection of a mobile phone 2734, a compass system 1706, a GPS receiver 752, another navigation device 2740, an access controller 2742 (e.g., a HomeLink® product sold by Johnson Controls, Inc.), a PDA 2746, a media player 2752, a satellite radio, a USB microphone, a wireless USB device 2750, or another portable device that may be brought into vehicle 100 and configured to communicate via USB connection*." EX1029 (Chutorash), 27:1-30; *see also id.*, Figs. 1, 3, and 27-30; 5:29-33 ("*vehicle 100 may include … vehicle control system 106 (e.g., media system, navigational system, entertainment system, display system, communications systems, etc*."). Indeed, Fig. 27 shows at least 8

Microchip Ex. 1013, p. 106
Microchip v. Aptiv
IPR2024-00228

Aptiv Exhibit 2011 Page 106
Microchip v. Aptiv IPR2024-00229

DocuSign Envelope ID: 21006CD8-3A89-44EF-9ECF-DF7EDF8B0033

separate USB products connected to the control system 106 via the USB interfaces. As a result, a POSITA would have understood that hub(s) were necessary to implement this system.

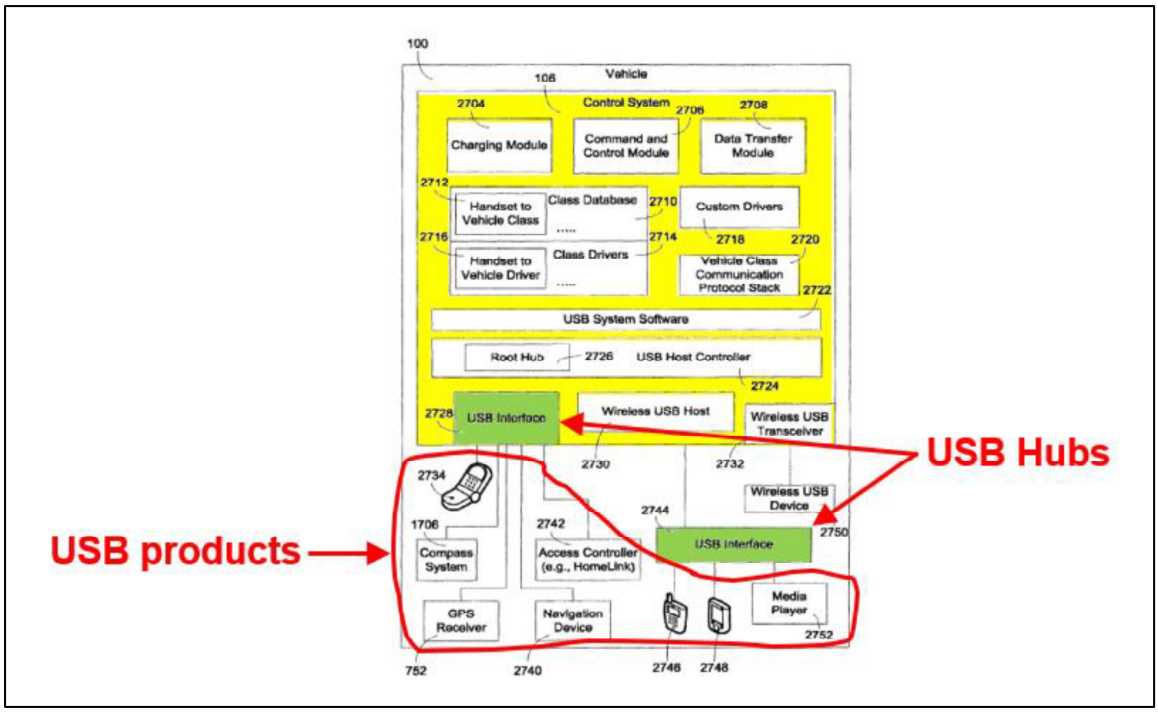

Id., Fig. 27 (annotated).

205. Chutorash does not describe the USB interfaces 2728 or 2744 in detail. But these interfaces connect an upstream host (in vehicle control system 106) to multiple downstream USB devices. Thus, the "*USB Interface[s]*" are USB hubs. *See* §VIII.C. And the very minimum, a POSITA would have found it obvious to use USB hubs for these interfaces.

206. Additionally, a POSITA would have been motivated to use a USB hub with host-to-host capabilities because *"[v]ehicle control system 106 could be*

Microchip Ex. 1013, p. 107
Microchip v. Aptiv
IPR2024-00228

Aptiv Exhibit 2011 Page 107
Microchip v. Aptiv IPR2024-00229

DocuSign Envelope ID: 21006CD8-3A89-44EF-9ECF-DF7EDF8B0033

classified as an embedded host" and various USB products (*e.g.*, mobile phone 2734, media player 2752, etc.) are precisely the types of products that typically act as USB hosts. EX1029 (Chutorash), 27:1-30. In other words, there will be an upstream host (within vehicle control system 106) that must connect to downstream products that may operate as a host (*e.g.*, mobile phone 2734).

207. Further, Chutorash discloses that the *"[v]ehicle control system 106 may use the USB interface 2728*" for "*command and control*" purposes. EX1029 (Chutorash), 27:12-25; *see also id.*, 13:22-24. For example, *"[v]ideo services 724 of the portable device 116 may be utilized by vehicle control system 106 to provide video decoding and/or playback features to the vehicle*." *Id.*, 14:40-53; *see also id.*, 14:62-67 (discussing gaming applications, including for "*a rear set entertainment system*"), 7:2-10. To a POSITA, these features would have been understood to include functionality of dual-role products (*e.g.*, a smartphone) operating in host mode, and requiring a host-to-host connection.

208. The expectations of users of USB devices make the modified Chang USB hub desirable in a Chutorash deployment environment. In a vehicle, individuals often sit in a certain location, *e.g.*, the backseat. It is desirable to allow each individual the ability to plug a phone (or other USB product) into any USB port in the car, and thus a POSITA would have been motivated to use a hub with dual-role ports to provide this convenient access throughout the vehicle. This is consistent

Microchip Ex. 1013, p. 108
Microchip v. Aptiv
IPR2024-00228

Aptiv Exhibit 2011 Page 108
Microchip v. Aptiv IPR2024-00229

DocuSign Envelope ID: 21006CD8-3A89-44EF-9ECF-DF7EDF8B0033

with Chutorash's express goal of "*improved user interface features and/or connectivity features relating to vehicle control systems, remote sources, and/or portable devices*." EX1029 (Chutorash), 1:34-36.

209. A POSITA would have had more than a reasonable expectation of success using the modified Chang USB hub in the vehicle control system of Chutorash for several reasons. First, USB products in 2013 were widespread and well understood, and the connection schemes of these elements (a hub to downstream products) was part of the well-known USB standards. *See* §§VI.A, VI.A.1, and VI.A.2. Second, an embedded vehicle control/infotainment systems is similar to a PCs. *See* §VI.D. In other words, the implementation is highly similar to basic USB deployments in the context of PCs.

XI. MOTIVIATION TO MODIFY CHANG IN VIEW OF CHANG II, AN96527, AND THE KNOWLEDGE OF A POSITA

210. A POSITA would have been motivated, and had a high expectation of success, to additionally combine the teachings from Cypress Semiconductor's AN96527 with Chang/Chang II because AN96527 provides an obvious deployment of adjustable power delivery (and the underlying USB-PD standard) for the Chang and Chang II system. In particular, Chang, Chang II, and a POSITA's knowledge discloses a USB hub with a host-to-host bridge and one or more dual-role ports. *See* §IX. AN96527 expressly discloses using adjustable power delivery in a USB hub. *See* §VIII.D; EX1064, 4 ("*Figure 4 shows the power delivery signals of a*

Microchip Ex. 1013, p. 109
Microchip v. Aptiv
IPR2024-00228

Aptiv Exhibit 2011 Page 109
Microchip v. Aptiv IPR2024-00229

DocuSign Envelope ID: 21006CD8-3A89-44EF-9ECF-DF7EDF8B0033

downstream facing port (DFP), which would be a host ***or a hub*** *and is typically a power provider…*"); 25 ("*This section extends the design of the client board* ***and adds a hub*** *and a collection of other devices that would be found in a docking station*."); 26 (Fig. 31. Data Paths of a Type-C Hub Design) (emphasis added). Accordingly, a POSITA would be motivated to apply AN96527's teachings to Chang and Chang II.

211. **First**, the AN96527 Cypress Application note explains that "*[a]ll USB products, at all speeds, can take advantage of Power Delivery as a power provider, power consumer, or sometimes both …. Up to 100 W can be distributed on a Type-C cable, meaning that even a tablet or notebook can be bus-powered*." EX1064, 1. Thus, the reference itself says that adjustable power delivery applies to "*[a]ll USB products, at all speeds*." *Id*. This certainly includes USB hubs, which were a common type of USB product. Providing power delivery capabilities eliminates the need for having separate wall-socket chargers and also provides the benefit of a reduction in cabling. *Id.*, 13 ("*The result is a single Type-C cable serving all three functions of power, USB data and display*."). Thus, a POSITA would have been motivated to include AN96527's teachings in the modified Crossbar Implementations to achieve better and more convenient USB charging capabilities.

212. **Second**, the USB-PD standards and AN96527 teach a swappable and adjustable power supply delivery system as shown, for example, in Fig. 21 of

DocuSign Envelope ID: 21006CD8-3A89-44EF-9ECF-DF7EDF8B0033

AN96527, which is a flow chart that shows "*power role swap[ping]*" among various voltage and current settings, including "*5V@900mA, 12V@3A, 13V@3A and 20V@3A*." EX1064, 18. Accordingly, in response to changes in power requirements, the system can respond and provide flexible, as-needed power capabilities.

213. **Third**, the AN96527 application note teaches that "*[a] hub now plays a much more important role because it can manage and distribute up to 100 W of power for each Type-C port*," which makes it feasible and convenient for consumers "*to power and/or charge a laptop*" (or other USB product) using just the USB data cable (*i.e.*, there is no need for a separate power cord). EX1064, 25. In my opinion, a POSITA would be motivated to apply the variable power teachings in AN96527 (which are made possible by USB-PD standards) to Chang's modified hub to take advantage of this benefit.

214. Because the purpose of an application note is to teach a POSITA (*e.g.*, an engineer or designer) how to implement the subject matter described in the application note, a POSITA would have had a high expectation of success incorporating AN96527's (and underlying USB-PD teachings) into Chang's hub. As the AN96527 summarizes: "*This application note showed that all forms of Type-C design can be implemented with the CCG1 controller. The reference designs, including full schematics and application software, will get you off to a running*

Microchip Ex. 1013, p. 111
Microchip v. Aptiv
IPR2024-00228

Aptiv Exhibit 2011 Page 111
Microchip v. Aptiv IPR2024-00229

DocuSign Envelope ID: 21006CD8-3A89-44EF-9ECF-DF7EDF8B0033

start. The examples are based on SuperSpeed, but remember that Type-C Power Delivery is also applicable to USB 2.0 high-speed systems." EX1064, 26; *see also id.* 1 (AN96527 provides "*[w]orking prototype reference designs ... for each application area*"). Moreover, AN96527 expressly teaches its applicability to USB hubs. *See, e.g., id.*, 4 ("*Figure 4 shows the power delivery signals of a downstream facing port (DFP), which would be a host* ***or a hub***.") (emphasis added). The detail provided in AN96527 is more than sufficient to ensure a high expectation of success when implementing its teachings in common USB products, like a USB hub.

XII. CLAIM TERMS

215. I have given the terms in the challenged claims their plain and ordinary meanings, as would have been understood by a person of ordinary skill in the art at the time of the alleged invention, taking into consideration the language of the claims, the specification, and the prosecution history. I have applied these understandings of the claim terms in my analysis and in forming my opinions where appropriate in this Declaration. I specifically address how a POSITA would have understood "embedded USB host" below.

A. "Embedded USB Host"

216. I understand that parties agreed to a stipulated construction for "embedded USB host" in the district court litigation. They agreed that the phrase meant "USB host physically embedded in a vehicle." EX1075, 2.

Microchip Ex. 1013, p. 112
Microchip v. Aptiv
IPR2024-00228

Aptiv Exhibit 2011 Page 112
Microchip v. Aptiv IPR2024-00229

DocuSign Envelope ID: 21006CD8-3A89-44EF-9ECF-DF7EDF8B0033

217. I agree that, in the context of the '072 patent, a POSITA would understand the term "*embedded USB host*" to mean "*USB host physically embedded in a vehicle*." For example, the '072 patent states that "*[t]he USB Host function is often embedded into a component* ***of the vehicle infotainment system****, such as into the radio or other control module*." EX1009 ('072 patent), 1:51-53 (emphasis added). Consistent with this, all other references to "*embedded USB host*" in the '072 patent refer to this host being built (embedded) into a vehicle component. *See id.*, 1:21-23 ("*vehicle electronic systems*"), 1:57-61 ("*vehicle infotainment system can access content* …"), 4:7-11 ("*vehicle's embedded USB Host system*"), 4:27-30 ("*vehicle's embedded USB Host*"), 5:50-53, 5:58-60 ("*vehicle's embedded USB Host (such as a USB Host in a Head Unit)*"), 6:11-13 ("*vehicle's embedded USB Host*").

XIII. SUMMARY OF OPINIONS

218. I have been asked to compare the references cited herein to claims 1-12 and 15-17 of the '420 patent (the "Challenged Claims"). In my opinion, the Challenged Claims are unpatentable on the following Ground:

- Ground 1: Claims 1-12 and 15-17 are obvious over Chang in view of Chang II and the knowledge of a POSITA.

219. My substantive analysis in §XIV provides examples of why the Challenged Claims are unpatentable. I reserve the right to cite and rely on additional portions of the prior art in any future declarations or depositions.

Microchip Ex. 1013, p. 113
Microchip v. Aptiv
IPR2024-00228

Aptiv Exhibit 2011 Page 113
Microchip v. Aptiv IPR2024-00229

DocuSign Envelope ID: 21006CD8-3A89-44EF-9ECF-DF7EDF8B0033

XIV. UNPATENTABILITY ANALYSIS

A. Ground 1 (Claims 1-12 and 15-17): Chang in view of Chang II and POSITA Knowledge

1. Claim 1

220. For ease of reference, I provide below annotated color-coded figures showing how the elements of claim 1 map to each modified Crossbar Implementation of Chang Fig. 3.

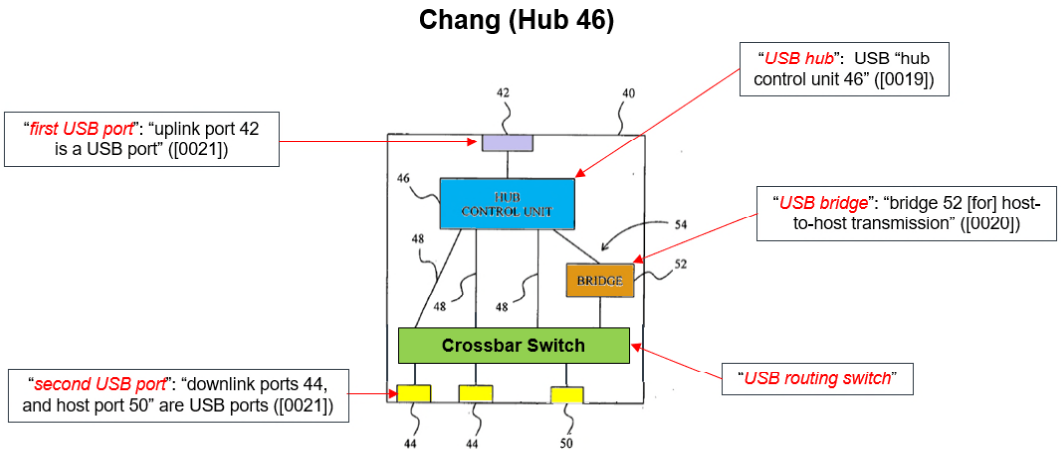

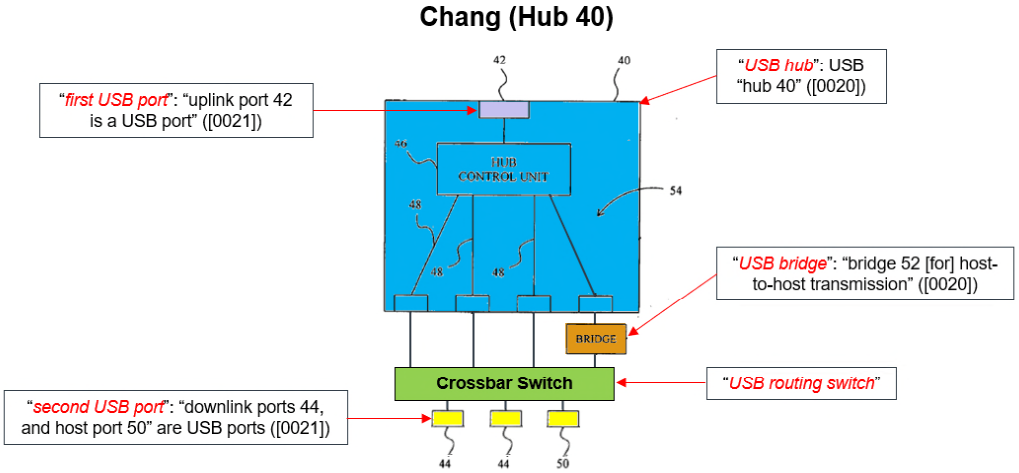

EX1014 (Chang), Fig. 3 (modified and annotated).

Microchip Ex. 1013, p. 114
Microchip v. Aptiv
IPR2024-00228

Aptiv Exhibit 2011 Page 114
Microchip v. Aptiv IPR2024-00229

DocuSign Envelope ID: 21006CD8-3A89-44EF-9ECF-DF7EDF8B0033

a. [Preamble]: "A Universal Serial Bus (USB) hub module, comprising:"

221. I offer no opinion on whether the preamble is or is not limiting. However, if the preamble is considered to be a limitation, my opinion is that Ground 1 satisfies it. The claim itself explains that the "*hub module*"[12] comprises a "USB hub," "USB routing switch," various USB ports, and a "USB bridge." This aligns with the '420 specification which uses the term "hub module" to generically describe a collection of components without reference to any specific structure, such as a plastic enclosure or metal casing. EX1003 ('420 patent), Figs. 4-5, 5:50-58, 6:2-10. A POSITA would understand the "USB hub" in this specification as the component that implements the USB Specification's definition of a hub, and the "USB hub module" as a local construct of the '420 patent. Each of the Crossbar Implementations discloses a "[*USB*] *hub module*" with all of the constituent components. As an initial matter, Chang's disclosure is made in the context of USB standards and technology. *See* EX1014 (Chang), Fig. 3; [0002] (discussing "USB 2.0"), [0016] ("*[A] bridge ... is integrated within a conventional ... USB hub*"), [0021] (disclosing embodiment where "*uplink port 42 and host port 50 are both USB ports" and "downlink port 44 is a USB port*."). The various bridge, hub, routing switch, and ports are shown in the modified Crossbar Implementation figures that

[12] For convenience, my Declaration uses red italics to identify claim language .

Microchip Ex. 1013, p. 115
Microchip v. Aptiv
IPR2024-00228

Aptiv Exhibit 2011 Page 115
Microchip v. Aptiv IPR2024-00229

DocuSign Envelope ID: 21006CD8-3A89-44EF-9ECF-DF7EDF8B0033

are presented in the motivation to combine analysis and are not repeated here (although I do include them when I introduce claim 1). I also discuss the respective elements of the USB hub module where each element is first recited in the claim.

222. If Aptiv argues that the term "*module*" connotes physically encasing the components, Ground 1 renders that interpretation obvious as well. Chang discloses that its bridge can be built into a hub, and that doing so would be known to "*an integrated circuit (IC) designer*," which I understand to mean a POSITA in this context. EX1014 (Chang), [0022]. I agree. Along the same lines, Chang II discloses that switching functionality can be built into the same component where the bridge is located. EX1015 (Chang II), Figs. 1, 5, [0034], [0037]-[0038], [0040]. More generally, it was the norm rather than the exception that consumer USB hubs were housed within a plastic or metal enclosure for both practical and aesthetic reasons.

223. Further, as it relates to the crossbar in Ground 1, Hesse discloses that its USB "*crossbar switch*" was on the same SoC (System-on-Chip) as the USB controller and other components. EX1017 (Hesse), [0057], [0059], [0063], [0070]. Again, this is fairly standard for USB products, including USB hubs. This is because benefits (like reduced costs, shared logic, smaller footprint) of integrating components on a single IC such were well-known. In this regard, it is unsurprising that Chang II's CPU 135, detection unit 134, first USB controller 131, second USB

Microchip Ex. 1013, p. 116
Microchip v. Aptiv
IPR2024-00228

Aptiv Exhibit 2011 Page 116
Microchip v. Aptiv IPR2024-00229

DocuSign Envelope ID: 21006CD8-3A89-44EF-9ECF-DF7EDF8B0033

controller 132, buffer unit 136, etc. are all part of a single "*control chip 13*" shown in Chang II Fig. 2 below.

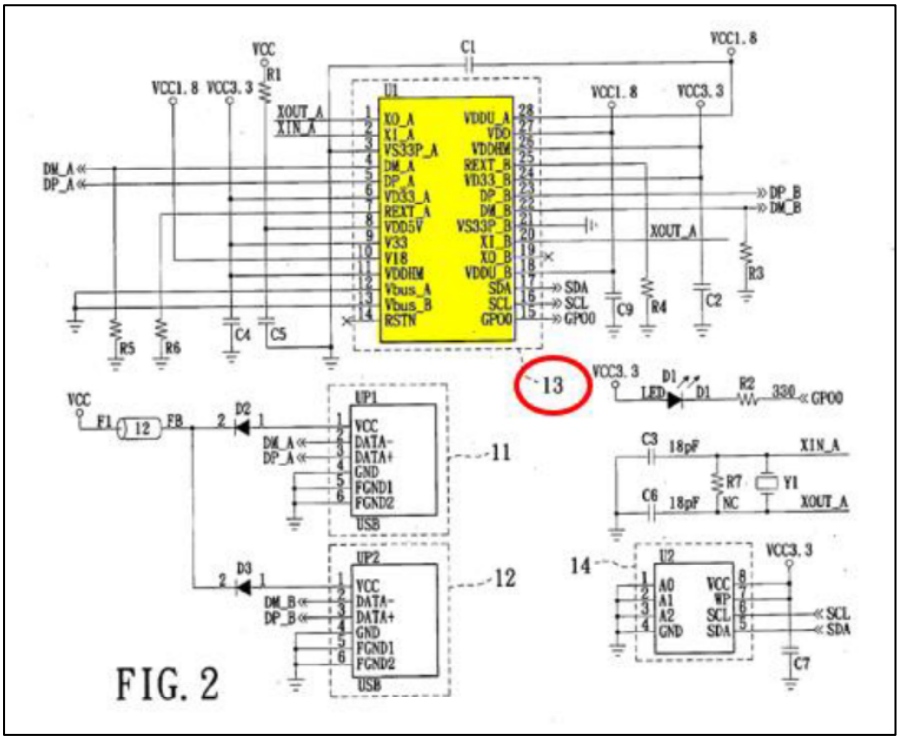

EX1015 (Chang II), Fig. 2 (annotated).

224. Accordingly, a POSITA would have been motivated to include the various "hub module" components in the same enclosure, either at the IC level or using a product housing.

b. 1[a] "a first USB port configured to be connected to a USB host;"

225. Each Crossbar Implementation of Chang Fig. 3 has "*a first USB port configured to be connected to a USB host.*" In particular, "*the uplink port 42*" in Chang Fig. 3 "*is a USB port*," EX1014 (Chang), [0021]. And Chang itself further

Microchip Ex. 1013, p. 117
Microchip v. Aptiv
IPR2024-00228

Aptiv Exhibit 2011 Page 117
Microchip v. Aptiv IPR2024-00229

DocuSign Envelope ID: 21006CD8-3A89-44EF-9ECF-DF7EDF8B0033

specifies that "*uplink port 42 for being linked to a host*." *Id.*, [0019]. Thus, Chang satisfies this element for both of the modified Crossbar Implementations.

c. 1[b] "a second USB port configured to be connected to a consumer device;"

226. The modified Crossbar Implementations of Chang Fig. 3 each have "*a second USB port configured to be connected to a consumer device*." It is important to note here that "*consumer device*" is being used in this phrase to generically refer to a USB product, no matter what mode (host/device) it is operating in. This is apparent from the context of the '420 patent as a whole and the claim itself, which specifies in claim element 1[f] that the "*consumer device*" can be "*in a USB host mode*." In the Crossbar Implementations, any of "*downlink ports 44*" or "*host port 50*" (which in the Crossbar Implementations are all dual-mode ports) qualify as the "*second USB port*." *See* EX1014 (Chang), [0021] (discussing "*downlink ports 44, and host port 50*"); *see also id.* [0019]-[0020] (discussing "*several transmission paths*" between uplink port 42 and downlink ports 44 and 50). Each of these ports is "*configured to be connected to a consumer device*." For example, in the words of Chang, "*ports 44 [are] for being linked to devices*." *Id.*, [0019]; *see also id.*, [0009]; [0017] ("*USB hub 10 has … several downlink ports 14 for being linked to devices*"). Similarly, Chang's "*port 50 [is] for being linked to a host*," which (as noted above) qualifies as a "*consumer device*" in this claim element. *Id.*, [0020]. In summary, each modified Crossbar Implementation meets claim element 1[b], as shown below.

Microchip Ex. 1013, p. 118
Microchip v. Aptiv
IPR2024-00228

Aptiv Exhibit 2011 Page 118
Microchip v. Aptiv IPR2024-00229

DocuSign Envelope ID: 21006CD8-3A89-44EF-9ECF-DF7EDF8B0033

Chang (Hub 46)

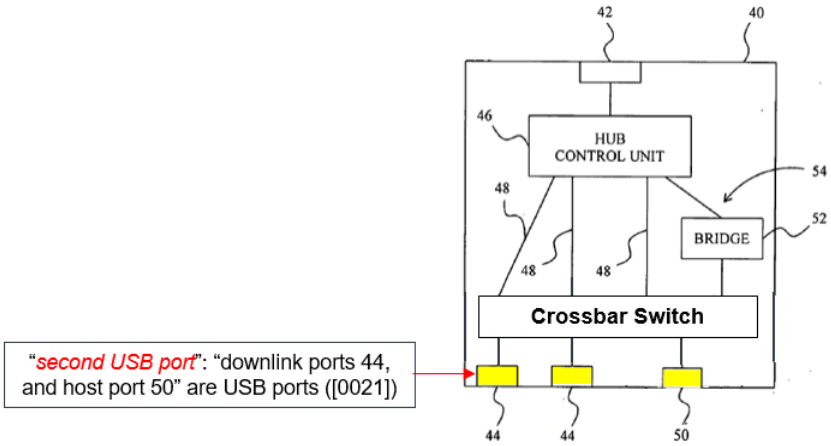

Chang (Hub 40)

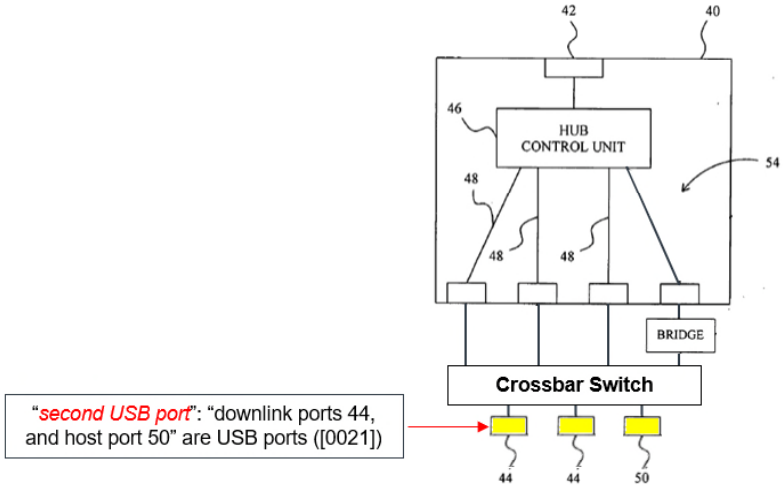

Id., Fig. 3 (modified and annotated).

Microchip Ex. 1013, p. 119
Microchip v. Aptiv
IPR2024-00228

Aptiv Exhibit 2011 Page 119
Microchip v. Aptiv IPR2024-00229

DocuSign Envelope ID: 21006CD8-3A89-44EF-9ECF-DF7EDF8B0033

d. 1[c]: "a USB hub interconnected[13] to the first USB port and the second USB port;"

227. Ground 1 satisfies claim element 1[c]. Figs. 4 and 5 of the '420 patent show the hub "*interconnected*" to the downstream USB ports through the routing switch/logic. I use this interpretation in my analysis. I discuss each alternative mapping for "*USB hub*" (*i.e.*, hub control unit 46 and hub 40) below and explain how each meets the claim limitation.

Hub Control Unit 46

228. Even though Chang labels box 40 as a "*hub*," the hub control unit 46 satisfies the "*USB hub*" limitation. EX1014 (Chang), [0019] ("*hub control unit 46*" establishes "*several transmission paths*" between "*uplink port 42 and downlink ports*"). There is no requirement that "*USB hub*" have a physical enclosure around the component(s) that comprise the hub. This aligns with how the term is used in the '420 specification, the file history, and in the USB 2.0 Specification. The USB 2.0 Specification provides an overview of "hub" as "*[a] USB device that provides additional connections to the USB*." EX1018, 34. That is exactly what hub control unit 46 in Chang does. I also note that in the prosecution of the '037 patent (which is the parent to the '420 patent), the patent examiner held a similar understanding of

[13] Figs. 4 and 5 of the '420 patent show the hub "interconnected" to the downstream USB ports through the routing switch/logic. I use this interpretation in my analysis.

Microchip Ex. 1013, p. 120
Microchip v. Aptiv
IPR2024-00228

Aptiv Exhibit 2011 Page 120
Microchip v. Aptiv IPR2024-00229

DocuSign Envelope ID: 21006CD8-3A89-44EF-9ECF-DF7EDF8B0033

hub when he issued a rejection over the Bohm reference because "*the USB switching hub 119 of Bohm* ***discloses the function of claimed hub***." *See* EX1002, 141 (emphasis added). In other words, the criteria the examiner used to identify a "hub" in the prior art was based on the functionality the component provided. Additionally, I note that the '420 specification illustrates a "hub" by simply drawing a box around the "*USB hub digital logic*" in Fig. 5, which has a hub, bridge, and switch on a single IC. *See also* EX1003 ('420 patent), 5:25-29, 7:11-17. In short, Fig. 5's "hub" is nothing more than the logic that performs the standard hub functionality of broadcasting upstream communications downstream (and vice versa). All of this supports my opinion that Chang's "*hub control unit 46*" is the claimed "*hub*," and Ground 1 satisfies sub-element 1[c][i] of "*a USB hub* [hub control unit 46] *interconnected to the first USB port* [port 42] *and the second USB port* [any of USB ports 44 and/or 50]" as reflected in the figure below.

Microchip Ex. 1013, p. 121
Microchip v. Aptiv
IPR2024-00228

Aptiv Exhibit 2011 Page 121
Microchip v. Aptiv IPR2024-00229

Decl. of Eric Welch

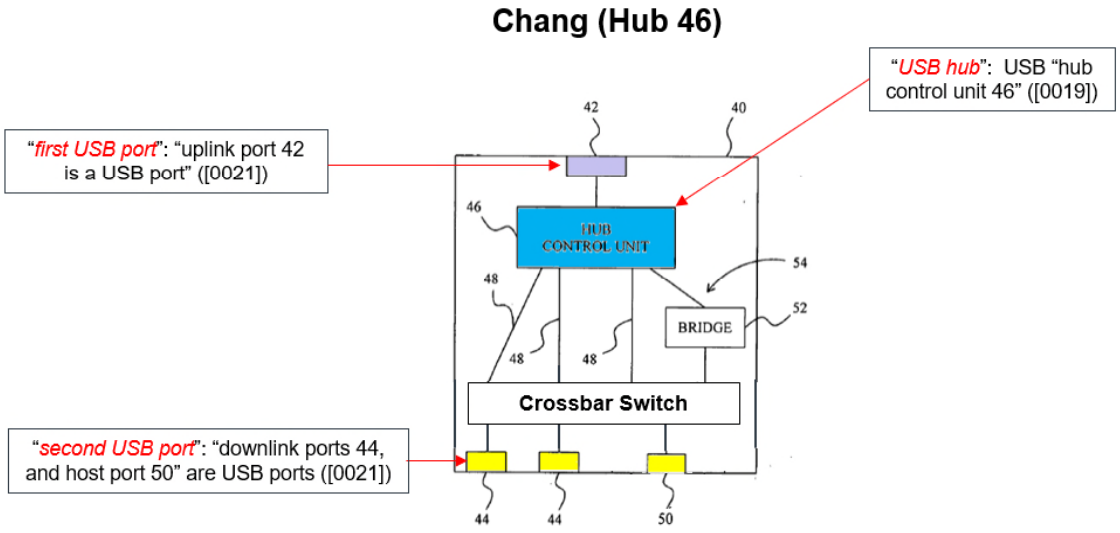

EX1014 (Chang), Fig. 3 (modified and annotated).

DocuSign Envelope ID: 21006CD8-3A89-44EF-9ECF-DF7EDF8B0033

Hub 40

229. In addition to hub control unit 46, Chang's hub 40 also qualifies as the claimed "*USB hub*" as shown below.

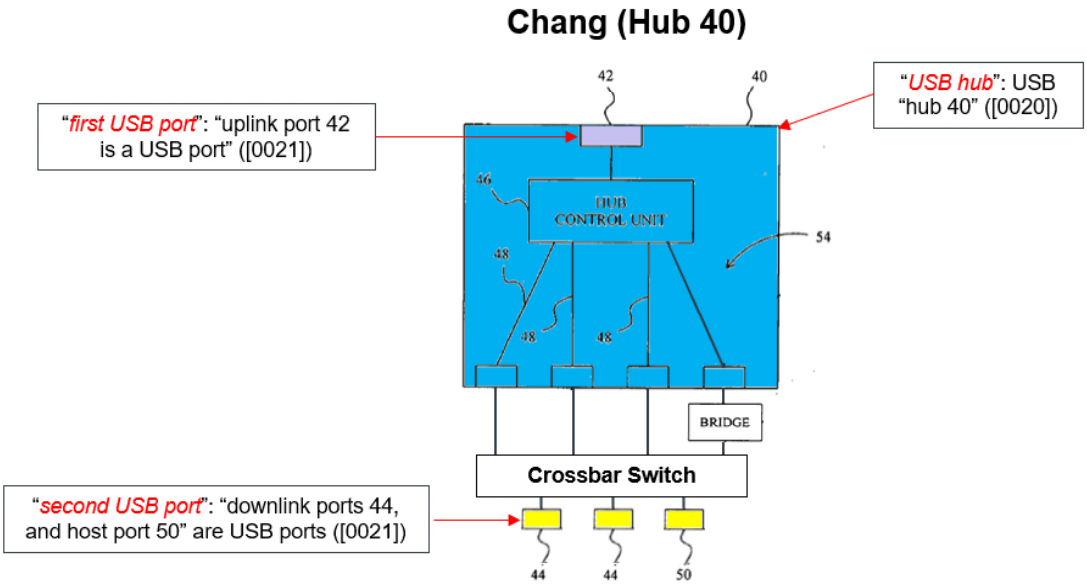

EX1014 (Chang), Fig. 3, [0019]-[0021] (modified and annotated); *see also id.*, [0023] ("*The hub 40 [] is a USB hub*."). As previously discussed, port 42 is the claimed "*first USB port*." To the extent the first port must be located outside of the hub, it would have been an easy and obvious change for a POSITA to locate port 42 outside hub 40. This is especially true given that the claimed "hub" is identified functionally, rather than by reference to any physical structure. Thus, the Crossbar Implementations of Ground 1 render obvious "*a USB hub* [hub 40] *interconnected to the first USB port* [port 42] *and the second USB port* [any of USB ports 44 and/or 50]" as shown above.

DocuSign Envelope ID: 21006CD8-3A89-44EF-9ECF-DF7EDF8B0033

e. 1[d] "a USB bridge interconnected to the USB hub; and"

230. Claim element 1[d] is satisfied by Ground 1. Given that contemporary host-to-host bridges were USB 2.0 specification compliant (because they had a "*USB device" as their "inside facing*" interface), adding such a bridge to a hub for the purpose of supporting host-to-host connectivity would have been obvious to a POSITA. Chang discloses that its "*bridge 52*" "*provides a function for host-to-host communications*" between a downstream host (attached to port 50, or port 44) and the upstream host (attached to port 42) through the hub. EX1014 (Chang), [0020]. I address each of the Crossbar Implementations using the alternative interpretations of "*USB hub*" (*i.e.*, hub control unit 46 or hub 40).

Hub Control Unit 46

231. The figure below shows how the modified Crossbar Implementation with hub control unit 46 as the claimed "*USB hub*" satisfies claim element 1[d]. In particular, it shows "*a USB bridge* [bridge 52] *interconnected to the USB hub* [hub control unit 46]." This corresponds with Chang's disclosure that "*uplink port 42 can communicate with the host linked to the host port 50*." EX1014 (Chang), [0020].

Microchip Ex. 1013, p. 124
Microchip v. Aptiv
IPR2024-00228

Aptiv Exhibit 2011 Page 124
Microchip v. Aptiv IPR2024-00229

DocuSign Envelope ID: 21006CD8-3A89-44EF-9ECF-DF7EDF8B0033

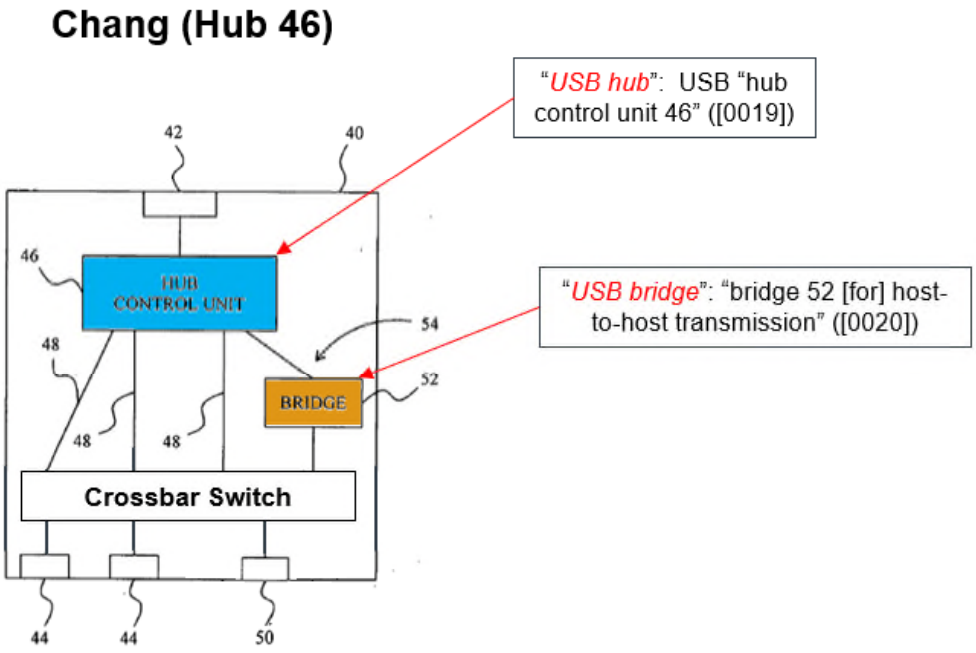

Id., Fig. 3 (modified and annotated).

<u>Hub 40</u>

232. The figure below shows how the modified Crossbar Implementation with Chang's hub 40 as the claimed "*USB hub*" satisfies claim element 1[d]. In particular, it shows "*a USB bridge* [bridge 52] *interconnected to the USB hub* [hub 40]."

Microchip Ex. 1013, p. 125
Microchip v. Aptiv
IPR2024-00228

Aptiv Exhibit 2011 Page 125
Microchip v. Aptiv IPR2024-00229

DocuSign Envelope ID: 21006CD8-3A89-44EF-9ECF-DF7EDF8B0033

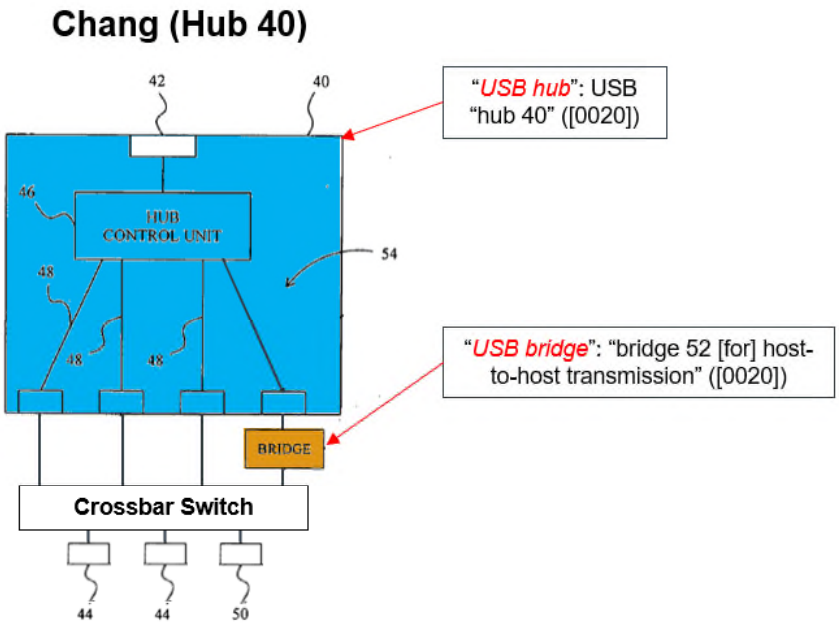

EX1014 (Chang), Fig. 3 (modified and annotated); [0020].

f. 1[e] "a USB routing switch interconnected to the USB bridge, the USB hub, and the second USB port,"

233. Each Crossbar Implementation of Chang Fig. 3 in Ground 1 satisfies claim element 1[e]. All of the components recited in element 1[e], and their respective interconnections, are present in the modified Crossbar Implementations. As I discuss in the motivation to combine analysis, Ground 1 modifies Chang to include dual-role USB ports and a crossbar switch to provide routing for establishing host-to-host and host-to-device communication paths. I note that Fig. 4 of the '420 patent depicts crossbar functionality with a so-called "*USB Routing Multiplexing Switch[]*" that may be formed from USB multiplexers. EX1003 ('420 patent), Fig. 4, 4:37-40.

Microchip Ex. 1013, p. 126
Microchip v. Aptiv
IPR2024-00228

Aptiv Exhibit 2011 Page 126
Microchip v. Aptiv IPR2024-00229

DocuSign Envelope ID: 21006CD8-3A89-44EF-9ECF-DF7EDF8B0033

234. Before addressing the specific mappings for each Crossbar Implementation, I note that Chang II's "*main feature*" is the provision of "*two different transmission paths*" (EX1015 (Chang II), [0021]), *i.e.*, "*bypass*" and "*bridge transmission*" paths (*id.*, [0024]). Chang II explains that "*by automatically detecting the type of device connected (host or slave) the present invention can switch to the proper transmission path*." *Id.*, [0021]; *see also* §VIII.B. I previously explained in §§VI.B.1 and VI.B.2 why switching transmission paths was well-known, highly predictable, and routine to implement using readily available off-the-shelf components like the ones listed on Fairchild's website in EX1059. For example, EX1068 is the datasheet for a "*Two-Port, High-Speed USB 2.0 (480Mbps) switch*" (*i.e.*, a 2:1 USB mux). *See also* EX1063, 7-8 (MAX4989 datasheet describing "*USB 2.0 bidirectional crosspoint switch that allows the user to connect any 2 of 4 USB pairs*."); EX1060. In view of the availability of these components, the knowledge of a POSITA, and the teachings of Chang II, it would have been obvious to modify Chang with, for example, a crossbar to enable switching between a host-to-host bridge path (when a host connects) and bypass path (when a device connects). Mapping the modified Crossbar Implementations to the claimed components in element 1[e] is straightforward as shown below.

Microchip Ex. 1013, p. 127
Microchip v. Aptiv
IPR2024-00228

Aptiv Exhibit 2011 Page 127
Microchip v. Aptiv IPR2024-00229

Hub Control Unit 46

235. With hub control unit 46 as the claimed "*USB hub*," the figure below identifies each component of element 1[e]:

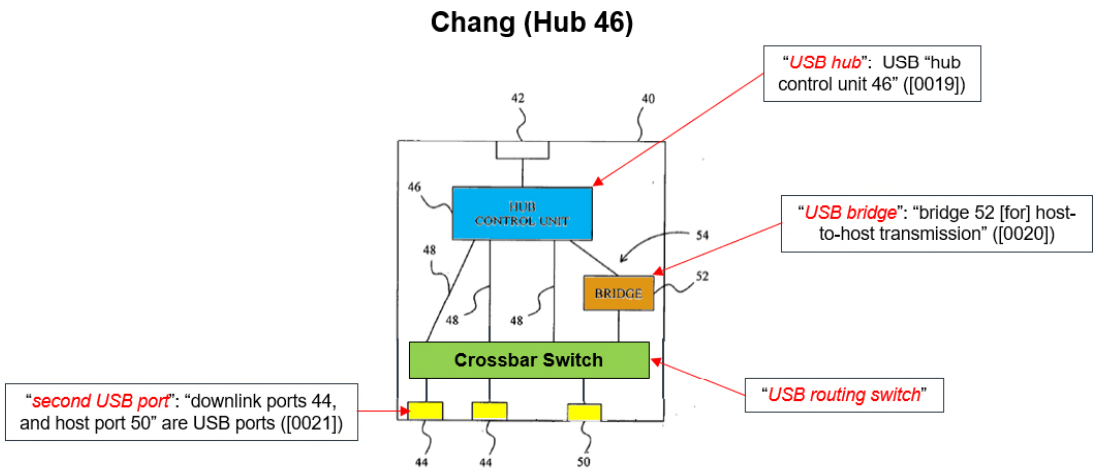

EX1014 (Chang), Fig. 3 (modified and annotated). This obvious modification to Chang (discussed *supra* §IX) discloses "*a USB routing switch* [the crossbar switch] *interconnected to the USB bridge* [bridge 52], *the USB hub* [hub control unit 46], *and the second USB port* [any of ports 44 and/or 50]."

Hub 40

236. With hub 40 as the claimed "*USB hub*," the figure below identifies each component of element 1[e]:

DocuSign Envelope ID: 21006CD8-3A89-44EF-9ECF-DF7EDF8B0033

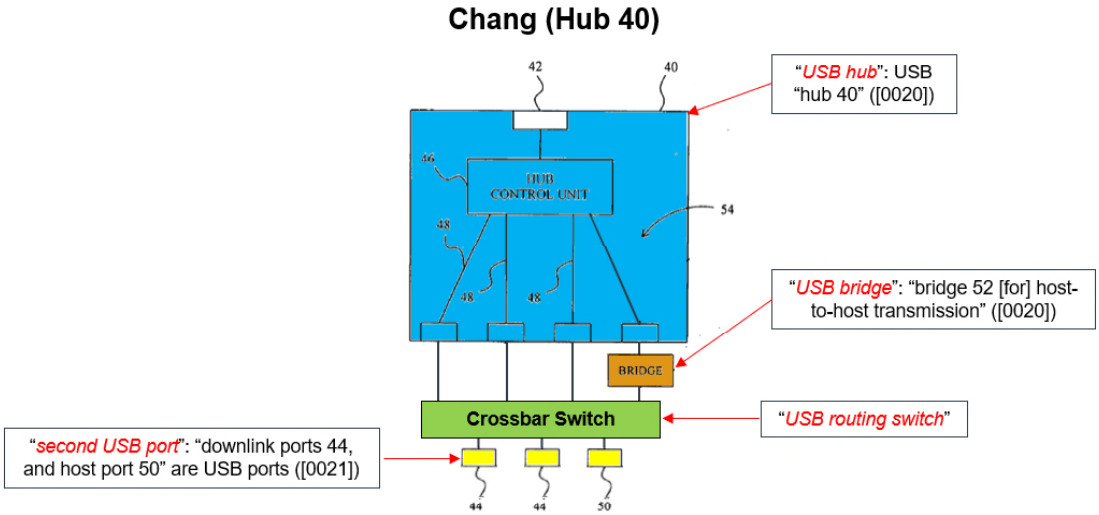

EX1014 (Chang), Fig. 3 (modified and annotated). This obvious modification to Chang (discussed *supra* §IX) discloses "*a USB routing switch* [the crossbar switch] *interconnected to the USB bridge* [bridge 52]*, the USB hub* [hub 40]*, and the second USB port* [any of ports 44 and/or 50]."

g. 1[f]: "[1][f][i] wherein the USB routing switch is configured to connect the second USB port to the first USB port through the USB bridge, [1][f][ii] thereby providing bidirectional initiation of communication between the USB host and the consumer device when the consumer device connected to the second USB port is in a USB host mode and"

237. Each of the modified Crossbar Implementations of Chang Fig. 3 satisfy claim element 1[f]. This element is broken down into two sub-parts and I analyze each one. Beginning with sub-element 1[f][i], the crossbar is configurable via control signals, which are often called "select lines." The MAX4989 datasheet provides an example and calls its control signals "*Control Input[s]*." *See* EX1063,

Microchip Ex. 1013, p. 129
Microchip v. Aptiv
IPR2024-00228

Aptiv Exhibit 2011 Page 129
Microchip v. Aptiv IPR2024-00229

DocuSign Envelope ID: 21006CD8-3A89-44EF-9ECF-DF7EDF8B0033

7 ("*The MAX4989 provides three control logic inputs, C0, C1, and C2, to control the switch connections as shown in the* ***Functional Diagram/Truth Table***."). The "*Truth Table*" in the datasheet reflects how the different combinations of C0, C1, and C2 will determine the routing path. *Id*., 8. A similar concept applies when constructing a crossbar switch from multiplexers—the multiplexer select lines will collectively control the routing paths between the input and output ports.

238. I discuss the host-to-host transmission path for the Crossbar Implementations at element 1[d] and in the motivation to combine analysis. As stated there, it was obvious to connect the correct transmission path after detecting the host/device mode of downstream consumer product. Upon detection, the relevant crossbar control signals will be asserted to make the connection between the consumer product and the bridge (for host-to-host transmission path 54) or between the consumer product and the hub (for host-to-device transmission path 48).[14] I note that the crossbar controls I have discussed correspond to what the '420 patent calls "*Switch Control*" in Fig. 5.

[14] Chang II discloses a "bridging detection signal" that "controls the operation of either the second USB controller 132 or the bypass circuit unit 133." EX1015 (Chang II), [0038]. Applying this teaching (and a POSITA's knowledge of

Microchip Ex. 1013, p. 130
Microchip v. Aptiv
IPR2024-00228

Aptiv Exhibit 2011 Page 130
Microchip v. Aptiv IPR2024-00229

DocuSign Envelope ID: 21006CD8-3A89-44EF-9ECF-DF7EDF8B0033

239. A POSITA would understand that one obvious implementation of a detection circuit would be to include it in the bridge. This would work by configuring the switch to first attach anything plugged in to the bridge for testing. The bridge would then test what was plugged in and if it is a USB Host, turn on its USB speed resistor and attach itself as a USB device to the incident USB Host. On the other hand, if what was plugged in is a USB Device, the bridge could send a signal to the switch directing it to connect what was plugged in directly to one of the Hub ports. This leads to the following obvious modified Crossbar Implementations:

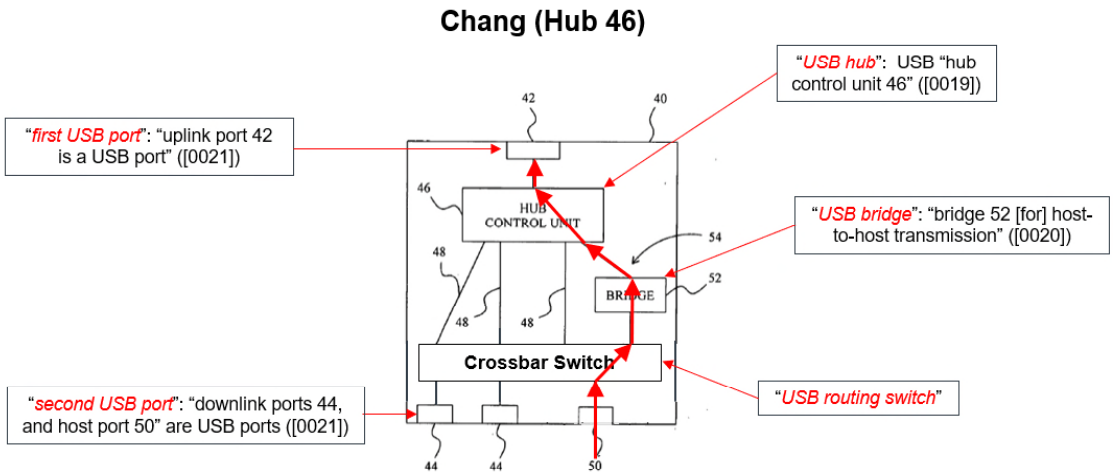

switching) to Chang, the crossbar connects the downstream port to the bridge upon detecting a downstream host (*see supra* §§VI.B.1 and VI.B.2.).

Microchip Ex. 1013, p. 131
Microchip v. Aptiv
IPR2024-00228

Aptiv Exhibit 2011 Page 131
Microchip v. Aptiv IPR2024-00229

DocuSign Envelope ID: 21006CD8-3A89-44EF-9ECF-DF7EDF8B0033

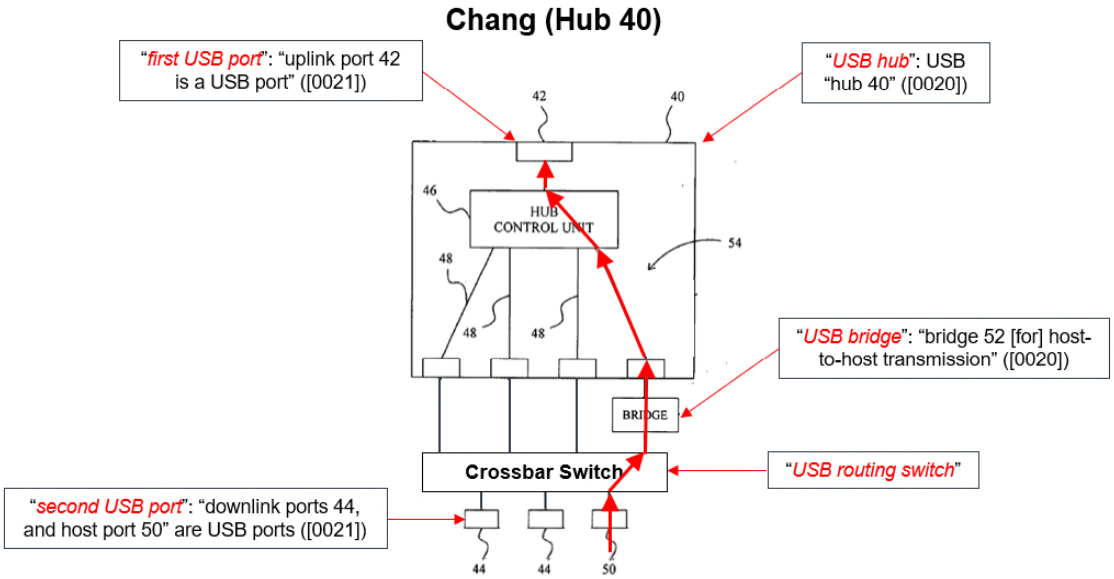

EX1014 (Chang), Fig. 3 (modified and annotated). The red arrows depict the host-to-host connection path established by the crossbar when there is a host connected on downstream port 50. Due to the presence of the crossbar, a host-to-host connection could also be established on either of the ports 44 instead of port 50. Any of those connections satisfies sub-element 1[f][i] ("*wherein the USB routing switch* [crossbar] *is configured to connect the second USB port* [*e.g.*, port 50] *to the first USB port* [port 42] *through the USB bridge* [bridge 52] *... when the consumer device connected to the second USB port is in a USB host mode.*").

***

240. Next, sub-element 1[f][ii] recites "*thereby providing bidirectional initiation of communication between the USB host and the consumer device when*

DocuSign Envelope ID: 21006CD8-3A89-44EF-9ECF-DF7EDF8B0033

the consumer device … is in a USB host mode." The word "*thereby*"[15] indicates that the function recited in sub-element 1[f][ii], is accomplished by the "*routing switch*" (crossbar), "*bridge*," etc. that are recited in sub-element 1[f][i]. No matter which component(s) (*viz.*, routing switch, bridge, upstream host, or downstream host) "*provid[e] bidirectional initiation of communication*," both Crossbar Implementations satisfy this limitation. This is so because both the crossbar and downstream host in the Crossbar Implementations are configured to provide bidirectional initiation of communication in the same way disclosed by the '420 patent.

241. In this regard, it is helpful to consider what the '420 patent says about "*bidirectional communication*." The '420 specification describes "*bidirectional communication*" as host-to-host communication (*i.e.*, where USB ***commands*** are sent in each direction) as opposed to host-to-device communication (*i.e.*, sending USB ***data***, but not USB ***commands***, in both directions). EX1003 ('420 patent), 7:54-8:38 ("*[T]he Bridge hardware … form[s] a* ***bidirectional*** *bridge that passes USB traffic between two USB hosts*.") (emphasis added). By way of contrast, claim element 1[g] refers to a USB device that "*only respond[s] to communication*

[15] *See, e.g.*, https://dictionary.cambridge.org/us/dictionary/english/thereby (defining "thereby" as "because of this; as a result of this action").

Microchip Ex. 1013, p. 133
Microchip v. Aptiv
IPR2024-00228

Aptiv Exhibit 2011 Page 133
Microchip v. Aptiv IPR2024-00229

DocuSign Envelope ID: 21006CD8-3A89-44EF-9ECF-DF7EDF8B0033

initiated by the USB Host" when the consumer device is in device mode (*i.e.*, a host-device connection).

242. POSITA's were well aware that USB hosts are the entity that initiates communication requests, and therefore that host-to-host connections involve bidirectional communication, because each host may initiate communication. As the Castleberry reference explains, "*[t]o communicate, one [unit] operates as a USB Host which initiates communication requests between the units, and the other operates as a USB Device which responds to those requests*." EX1025 (Castleberry), 1:17-20. This convention of characterizing USB communication as "commands" being sent from a host to a device or between two hosts is common and would be understood by a POSITA (*see* ¶63). Ground 1's host-to-host communication is "*bidirectional*" because each host operates as a standard USB host that may initiate host communications. EX1014 (Chang), [0020], EX1015 (Chang II), [0026].

243. As noted, the crossbar and bridge both provide bidirectional initiation of communication in the same manner disclosed in the '420 patent. In particular, the '420 patent explains that, after detecting that a consumer product in host mode is connected on a downstream port, the routing switch connects the host-mode consumer product to the bridge, which enables the consumer product to "*detect a USB Device [in the bridge] is connected*" and "*begin the standard USB enumeration*

Microchip Ex. 1013, p. 134
Microchip v. Aptiv
IPR2024-00228

Aptiv Exhibit 2011 Page 134
Microchip v. Aptiv IPR2024-00229

DocuSign Envelope ID: 21006CD8-3A89-44EF-9ECF-DF7EDF8B0033

sequence." EX1003 ('420 patent), 6:19-28. By way of further explanation of the enumeration process, the USB 2.0 Specification defines "Bus Enumeration" as "*[d]etecting and identifying USB devices*." EX1018, 31; *see also id.*, §4.6.3 ("*Bus enumeration…identifies and assigns unique addresses to devices attached to a bus*."). This was all very well-known to a POSITA, and the '420 patent even describes enumeration as a "standard" USB process. EX1003 ('420 patent), 6:28-30. Additional details of how detecting a USB device is accomplished by sensing the USB speed resistors is discussed in §VI.B.1. As the '420 specification explains in connection with Fig. 7, the bridge "*forward[s] messages back and forth between the two hosts continues until the enumeration process is complete*," after which "*the two hosts may begin to use the IN and OUT endpoints to transfer application data and services*." EX1003 ('420 patent), 8:33-38.

244. The Crossbar Implementations of Ground 1 operate in the same manner as summarized above for the '420 patent. Chang II's control chip 13 (which includes CPU 135) selects the bridge transmission path after detecting that the downstream USB product is operating in a host mode. EX1015 (Chang II), [0021], [0038]. Chang II's control chip enters what it calls "*slave device state*" (*i.e.*, it presents as a USB device) and sends an "*inquire signal*." *Id.*, [0026]. A POSITA would have understood this "*inquire signal*" to probe the data line voltage (or other detection scheme) to determine where a host or device was connected. Chang II further

Microchip Ex. 1013, p. 135
Microchip v. Aptiv
IPR2024-00228

Aptiv Exhibit 2011 Page 135
Microchip v. Aptiv IPR2024-00229

DocuSign Envelope ID: 21006CD8-3A89-44EF-9ECF-DF7EDF8B0033

discloses that, upon detecting a USB host, "*the control chip 13 will switch the transmission path to the bridge transmission path, in order to successfully complete the bridging between the first host device 2 and the second host device 3, so that data transfer can proceed between the two host devices*," thereby initiating bidirectional communication between the two hosts. *Id*. A POSITA would have understood this to include the host enumerating the device interface in the bridge. This was well-known bridge functionality, and is consistent with Chang's statement that its bridge may be a suitable commercial bridge. EX1014 (Chang), [0020]; *see also* EX1054 (describing enumeration for USB bridging).

245. In summary, Ground 1 renders obvious sub-element 1[f][ii]: "*providing bidirectional initiation of communication between the USB host and the consumer device [is host mode]* [crossbar connecting downstream host to bridge, which enumerates the device interface to establish host-to-host connection with upstream host]." A POSITA would consider this sub-element obvious under either Crossbar Implementation as host-to-host communication was known to be bidirectional and, in this regard, is the same as described in the '420 patent.

Microchip Ex. 1013, p. 136
Microchip v. Aptiv
IPR2024-00228

Aptiv Exhibit 2011 Page 136
Microchip v. Aptiv IPR2024-00229

DocuSign Envelope ID: 21006CD8-3A89-44EF-9ECF-DF7EDF8B0033

h. 1[g]: "[1][g][i] wherein the USB routing switch is configured to connect the second USB port directly to the first USB port through the USB hub, [1][g][ii] thereby only responding to communication initiated by the USB Host when the consumer device connected to the second USB port is in a USB device mode."

246. Each Crossbar Implementation of Ground 1 satisfies element 1[g]. This element can be broken down into two sub-parts, and I analyze each one. Element 1[g] applies "*when the consumer device connected to the second USB port is in a USB device mode*." Ground 1 plainly discloses connections to downstream USB devices. *See, e.g.*, EX1015 (Chang II), Fig. 1 ("*Slave Device 4*"). And as explained in the motivation to combine section, ports 44 and 50 are dual-role ports in both Crossbar Implementations of modified Chang Fig. 3. *See* §IX. Moreover, although various embodiments in Chang II disclose connecting a dedicated host or dedicated device product to the dual-role port, Chang II says that "*other combinations and other connector types are too numerous to list, but those connector types covered under USB specification is all within the scope of the present invention*." EX1015 (Chang II), [0030]. As one example, this would include the well-known "Micro-AB" connector that accepted host, device, and/or dual-mode products. *See* EX1022, 13 (OTG "*provides both host and peripheral capabilities over a single Micro-AB receptacle*"). Accordingly, a POSITA would have understood Chang II's disclosure to include connecting a dual-role product. And it certainly would have been obvious. *See* §IX (motivation to include dual-mode USB ports for dual-mode USB products)

Microchip Ex. 1013, p. 137
Microchip v. Aptiv
IPR2024-00228

Aptiv Exhibit 2011 Page 137
Microchip v. Aptiv IPR2024-00229

DocuSign Envelope ID: 21006CD8-3A89-44EF-9ECF-DF7EDF8B0033

and §VI.B (demonstrating explosion of dual-mode products and corresponding ports).

247. Sub-element 1[g][i] recites: "*wherein the USB routing switch is configured to connect the second USB port directly to the first USB port through the USB hub*." This limitation is satisfied when a product in device mode connects to port 50 (or ports 44). Chang discloses "*several transmission paths 48*" for host-to-device communication. EX1014 (Chang), [0019]-[0020]. Paths 48 are illustrated in Chang Fig. 3, and all of them (*i.e.*, all of paths 48) connect to the hub control unit without going through the bridge. I have already discussed host/device detection in §VI.B.1 and crossbar routing in §VI.B.2. I have applied these concepts to Chang as discussed in my motivation to combine analysis and my discussion of claim element 1[f]. The two Crossbar Implementations are the results of making these obvious modifications to Chang Fig. 3, and are shown below with the purple arrows showing example host-to-device paths that bypass[16] the bridge when a USB device is connected on the downstream port.

[16] Chang discloses a traditional USB host-to-device connection where the upstream host bypasses the bridge and communicate with a downstream device through the hub. EX1014 (Chang), [0019], [0023].

Microchip Ex. 1013, p. 138
Microchip v. Aptiv
IPR2024-00228

Aptiv Exhibit 2011 Page 138
Microchip v. Aptiv IPR2024-00229

Chang (Hub 46)

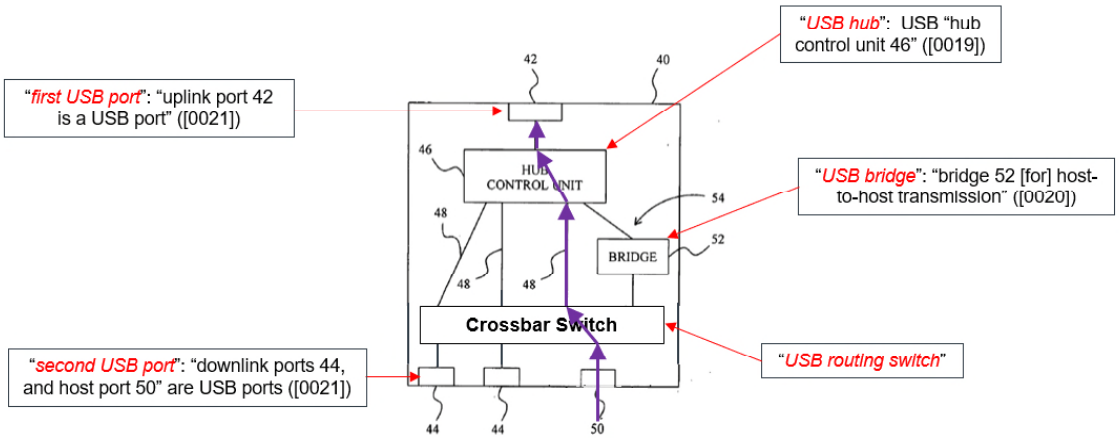

Chang (Hub 40)

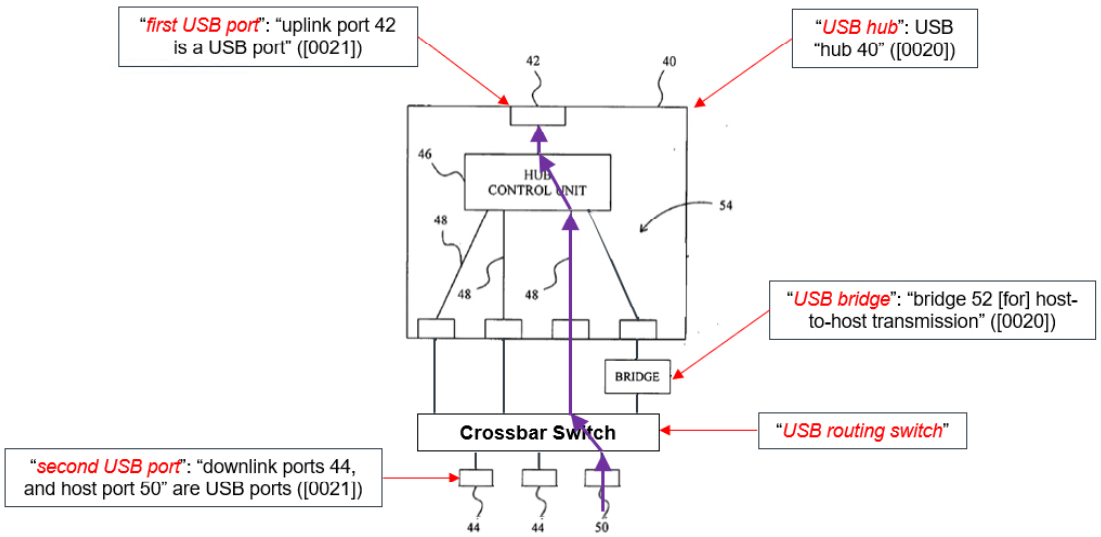

EX1014 (Chang), Fig. 3 (modified and annotated). As is apparent, in each Crossbar Implementation, "*the USB routing switch* [crossbar switch] *is configured to connect the second USB port* [*e.g.*, port 50] *directly to the first USB port* [port 42] *through the USB hub* [hub 40 or hub control unit 46]" which satisfies sub-

DocuSign Envelope ID: 21006CD8-3A89-44EF-9ECF-DF7EDF8B0033

element 1[g][i]. I note that each of ports 44 could also be used for establishing a host-to-device connection.

248. Sub-element 1[g][ii] ("*thereby only responding to communication initiated by the USB Host ...*") pertains to when the downstream consumer product is operating as a USB device. This is how a POSITA would understand the claim limitation about "*only responding to communication initiated by the USB Host*" and is confirmed by the remainder of the limitation ("*when the consumer device connected to the second USB port is in a USB device mode*") which I have already discussed. This meaning of "*only responding to communication initiated by the USB Host*" is supported by the description in the '420 patent specification, which states: "*[T]he USB Device responds to messages initiated by the USB Host*." EX1003 ('420 patent), 1:36-38. It was well-known to POSITAs that USB devices only respond to host commands, as reflected in the Castleberry reference, among others. *See* EX1025 (Castleberry), 1:17-20. Accordingly, the condition in sub-element 1[g][ii] refers to a downstream product in device mode. And Ground 1 plainly discloses connections to downstream USB devices. *See, e.g.*, EX1015 (Chang II), Fig. 1 ("*Slave Device 4*"). Thus, when port 50 (or one of ports 44) is connected to a consumer product in device mode, Ground 1 satisfies the requirement of element 1[g][ii] that the downstream product "*only respond[s] to communication initiated by the USB Host.*"

Microchip Ex. 1013, p. 140
Microchip v. Aptiv
IPR2024-00228

Aptiv Exhibit 2011 Page 140
Microchip v. Aptiv IPR2024-00229

DocuSign Envelope ID: 21006CD8-3A89-44EF-9ECF-DF7EDF8B0033

2. Claim 2

249. Claim 2 is a dependent claim that depends from claim 1 and states "*[2][a] wherein the USB routing switch is configured to connect the second USB port to the first USB port through the USB bridge thereby providing bidirectional initiation of communication between the USB host and the consumer device when the consumer device connected to the second USB port is in the USB host mode and [2][b] wherein the USB routing switch is configured to simultaneously connect another second USB port directly to the first USB port through the USB hub, thereby only responding to communication initiated by the USB Host when another consumer device connected to the another second USB port is in the USB device mode.*"

250. Although claim 2 is rather long, the substance simply requires a downstream host and a downstream device that simultaneously communicate with the upstream host. A POSITA would know that simultaneously connecting multiple downstream products to an upstream host is a primary purpose of conventional USB hubs, as I describe in the Technology Background. *See* §VI.A.2. And simultaneously connecting both a downstream host and downstream device is a primary purpose of Chang. EX1014 (Chang), Fig. 3, [0019]-[0020]. This can be seen, for example, in Chang Fig. 4 (which is an extension of Chang Fig. 3) which

Microchip Ex. 1013, p. 141
Microchip v. Aptiv
IPR2024-00228

Aptiv Exhibit 2011 Page 141
Microchip v. Aptiv IPR2024-00229

DocuSign Envelope ID: 21006CD8-3A89-44EF-9ECF-DF7EDF8B0033

shows three downstream devices 60 and one host device 70 that are simultaneously connected to an upstream host. *Id.*, [0023].

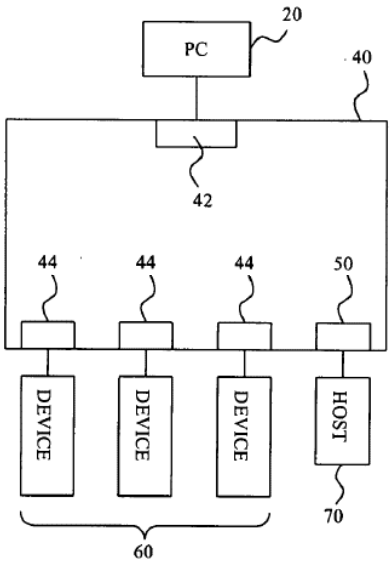

FIG. 4

Id., Fig. 4.

251. Both Crossbar Implementations satisfy claim 2. I observe at the outset that claim element 2[a] (which establishes a host-to-host connection through the bridge) is the same as claim element 1[f] and is met for the reasons I already discussed. This is shown in the comparison table below:

Microchip Ex. 1013, p. 142
Microchip v. Aptiv
IPR2024-00228

Aptiv Exhibit 2011 Page 142
Microchip v. Aptiv IPR2024-00229

DocuSign Envelope ID: 21006CD8-3A89-44EF-9ECF-DF7EDF8B0033

Element	Claim Language
1[f]	wherein the USB routing switch is configured to connect the second USB port to the first USB port through the USB bridge, thereby providing bidirectional initiation of communication between the USB host and the consumer device when the consumer device connected to the second USB port is in a USB host mode and
2[a]	wherein the USB routing switch is configured to connect the second USB port to the first USB port through the USB bridge thereby providing bidirectional initiation of communication between the USB host and the consumer device when the consumer device connected to the second USB port is in the USB host mode and

252. And, like claim element 1[g], claim element 2[b] concerns establishing a host-to-device connection, except that claim element 2[b] requires that the host-to-device connection is setup on "*another second USB port*"[17] such that it is connected "*simultaneously*" with the host-to-host connection. The only differences between claim elements 2[b] and 1[g] are highlighted below.

[17] I find the wording of connected to "*another second USB port*" to be odd. I understand this to simply mean a third USB port than is different from the "*first*" and "*second*" USB port recited elsewhere in the claim. I note that other claims in the '420 patent, such as claim 16, do recite a "*third*" USB port, which I find to be more straightforward wording.

Microchip Ex. 1013, p. 143
Microchip v. Aptiv
IPR2024-00228

Aptiv Exhibit 2011 Page 143
Microchip v. Aptiv IPR2024-00229

DocuSign Envelope ID: 21006CD8-3A89-44EF-9ECF-DF7EDF8B0033

Element	Claim Language
1[g]	wherein the USB routing switch is configured to connect the second USB port directly to the first USB port through the USB hub, thereby only responding to communication initiated by the USB Host when the consumer device connected to the second USB port is in a USB device mode.
2[b]	wherein the USB routing switch is configured to **simultaneously** connect **another** second USB port directly to the first USB port through the USB hub, thereby only responding to communication initiated by the USB Host when **another** consumer device connected to the **another** second USB port is in the USB device mode.

253. The establishment of a host-to-device connection in the Crossbar Implementations occurs in the same manner as I described for claim element 1[g], except that for claim element 2[b] the connection is established through a different downstream port than element 2[a]/1[f], as is shown below. The host-to-host connection of element 2[a] is shown by red arrows and the additional host-to-device connection of element 2[b] is shown by purple arrows. I note that the host-to-device connection could also be accomplished using any other available downstream port.

Microchip Ex. 1013, p. 144
Microchip v. Aptiv
IPR2024-00228

Aptiv Exhibit 2011 Page 144
Microchip v. Aptiv IPR2024-00229

DocuSign Envelope ID: 21006CD8-3A89-44EF-9ECF-DF7EDF8B0033

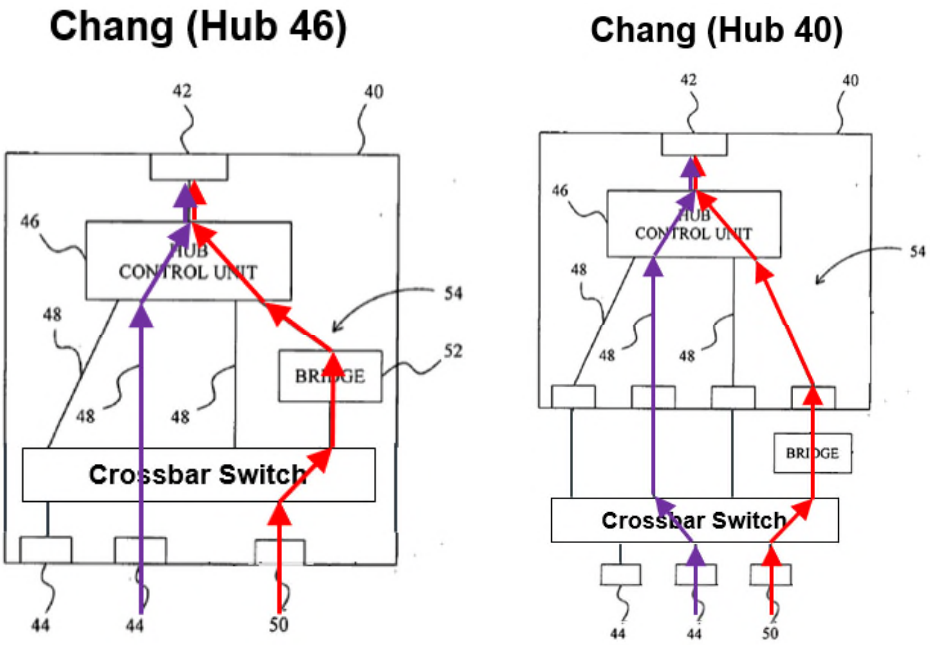

EX1014 (Chang), Fig. 3 (modified and annotated). The simultaneous connections are possible because of the presence of the crossbar, which can route each downstream consumer port (including all at the same time) directly to the hub or route any particular port to the hub through the bridge. Indeed, such flexibility in routing is the very purpose of a crossbar. *See* §VI.B.2. Bearing in mind that Chang's upstream port 42 always connects to a host, the use of a host-to-host bridge allows the hub to maintain connections between the upstream host *and* other downstream device ports even when establishing a host-to-host connection. *Compare* EX1014 (Chang), [0020], [0023] *with* EX1003 ('420 patent), 3:52-64. This avoids the problem described in the '420 specification at col. 1:58-61 where

Microchip Ex. 1013, p. 145
Microchip v. Aptiv
IPR2024-00228

Aptiv Exhibit 2011 Page 145
Microchip v. Aptiv IPR2024-00229

DocuSign Envelope ID: 21006CD8-3A89-44EF-9ECF-DF7EDF8B0033

"*other downstream ports of the USB hubs lose their data connection with the Head Unit*."

254. As shown above, the crossbar is readily configured (using its select/control signals) to route a downstream host (*e.g.*, port 50) and downstream device (*e.g.*, port 44) to upstream host port 42 at the same time. Thus, both Crossbar Implementations satisfy claim element 2[a] ("*the USB routing switch* [crossbar] *is configured to connect the second USB port* [port 50] *to the first USB port* [port 42] *through the USB bridge* [bridge] *thereby providing bidirectional initiation of communication between the USB host and the consumer device when the consumer device connected to the second USB port is in the USB host mode* [host-to-device connection shown by purple arrows]") and claim element 2[b] ("*the USB routing switch* [crossbar] *is configured to simultaneously connect another second USB port* [*e.g.*, port 44] *directly to the first USB port* [port 42] *through the USB hub* [hub 40 or hub control unit 46]*, thereby only responding to communication initiated by the USB Host when another consumer device connected to the another second USB port is in the USB device mode* [host-to-device connection shown by purple arrows]").

3. Claim 3

255. Claim 3 is a dependent claim that depends from claim 1 and states "*the USB hub module is configured to recognize whether the consumer device connected*

Microchip Ex. 1013, p. 146
Microchip v. Aptiv
IPR2024-00228

Aptiv Exhibit 2011 Page 146
Microchip v. Aptiv IPR2024-00229

DocuSign Envelope ID: 21006CD8-3A89-44EF-9ECF-DF7EDF8B0033

to the second USB port is in the USB host mode or in the USB device mode and control the USB routing switch accordingly."

256. As I discuss in §VI.B.1, host/device detection was common-place and well-known, and a POSITA would have been motivated with a high expectation of success to implement detection functionality in this Ground. I also discuss signal detection circuitry for this purpose when addressing motivation to combine Chang and Chang II. Moreover, OTG compatible USB devices provide an "ID" signal that indicates what mode a consumer product is operating in. In view of the need for host/device detection, and numerous ways of accomplishing it, it would have been obvious to perform this well-known function in Ground 1, and to route USB signals accordingly.

257. For example, Chang II discloses a "*Detection Unit*" (134) as shown in Fig. 5 below:

Microchip Ex. 1013, p. 147
Microchip v. Aptiv
IPR2024-00228

Aptiv Exhibit 2011 Page 147
Microchip v. Aptiv IPR2024-00229

DocuSign Envelope ID: 21006CD8-3A89-44EF-9ECF-DF7EDF8B0033

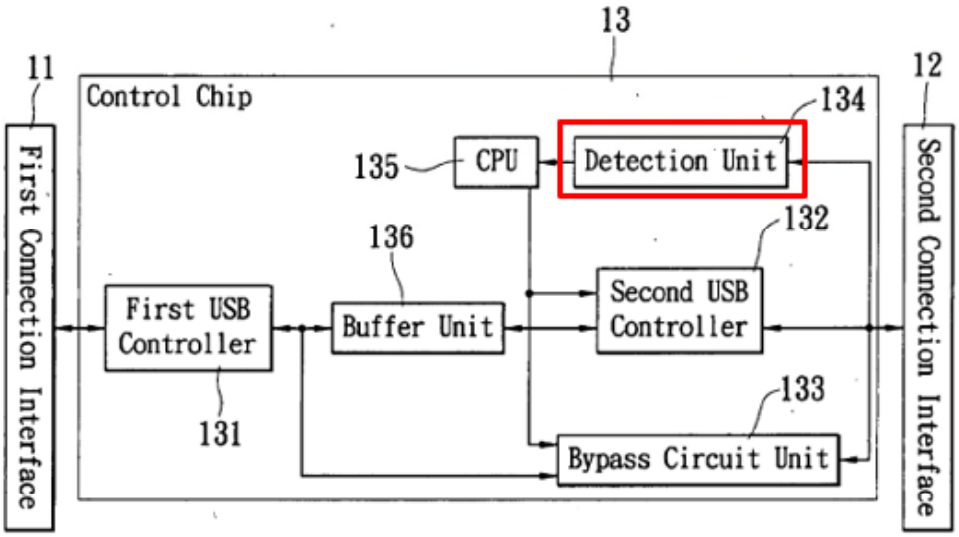

FIG. 5

EX1015 (Chang II), Fig. 5 (annotated).

258. The "detection unit" in Chang II "*automatically operate[s] to ... determine the type of device currently connected*" to the port. EX1015 (Chang II), [0038]. Chang II further discusses how the resulting "*bridging detection signal or slave detection signal*" is used to perform the appropriate routing. *Id*. Applying these teachings in the context of Ground 1, a POSITA would understand that the detection results would be used to control the crossbar control signals and establish the appropriate routing connections. For example, a POSITA would know that the "SEL[0]" and "SEL[1]" select lines shown in the datasheet for Fairchild's "*FSUSB63—3:1 High-Speed USB 2.0 Switch / Multiplexer*" are signals used to control routing through the mux.

Microchip Ex. 1013, p. 148
Microchip v. Aptiv
IPR2024-00228

Aptiv Exhibit 2011 Page 148
Microchip v. Aptiv IPR2024-00229

DocuSign Envelope ID: 21006CD8-3A89-44EF-9ECF-DF7EDF8B0033

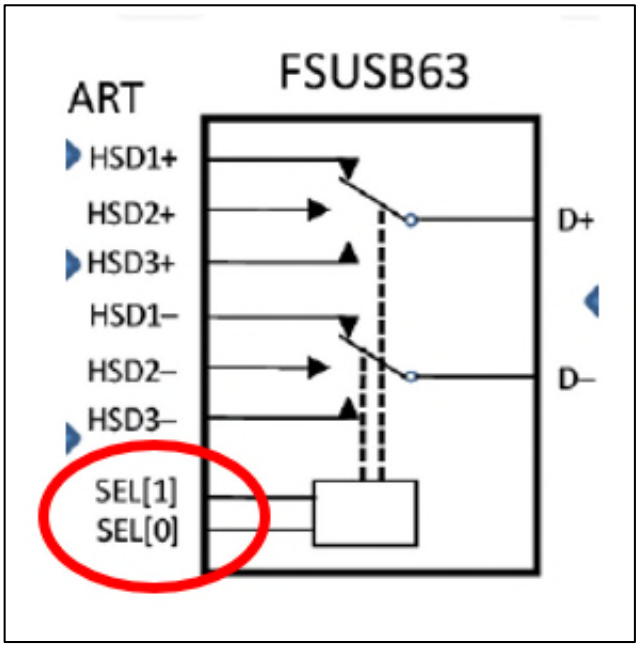

EX1060, Fig. 1 (annotated). Another example comes from the datasheet for Maxim's "*USB 2.0 Hi-Speed 2-of-4 Crosspoint Switch*" which includes the truth table below that defines the switching paths controlled by the control signals C0, C1, and C2.

Microchip Ex. 1013, p. 149
Microchip v. Aptiv
IPR2024-00228

Aptiv Exhibit 2011 Page 149
Microchip v. Aptiv IPR2024-00229

DocuSign Envelope ID: 21006CD8-3A89-44EF-9ECF-DF7EDF8B0033

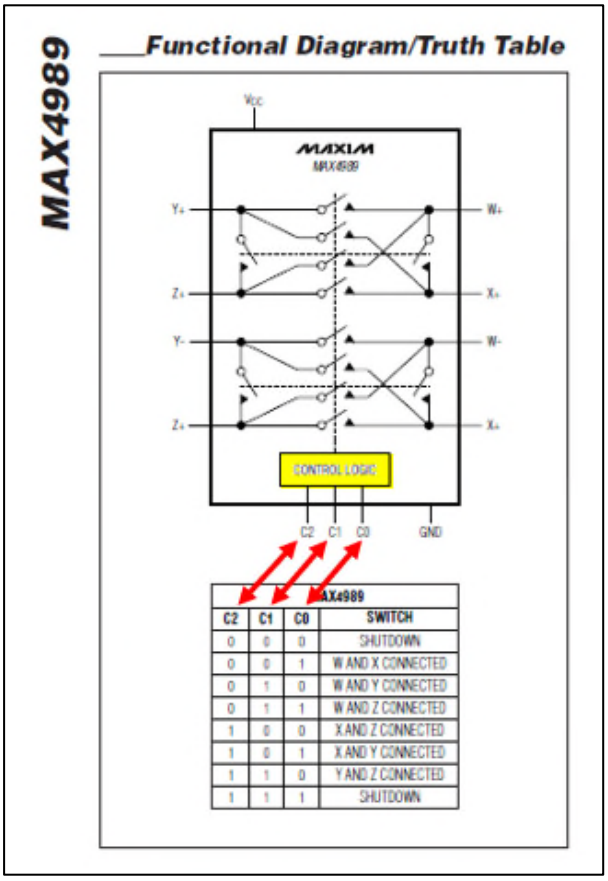

MAX4989			
C2	C1	C0	SWITCH
0	0	0	SHUTDOWN
0	0	1	W AND X CONNECTED
0	1	0	W AND Y CONNECTED
0	1	1	W AND Z CONNECTED
1	0	0	X AND Z CONNECTED
1	0	1	X AND Y CONNECTED
1	1	0	Y AND Z CONNECTED
1	1	1	SHUTDOWN

EX1063, 8 (annotated); *see also id.*, 7 ("*The MAX4989 provides three control logic inputs, C0, C1, and C2, to control the switch connections*").

259. The operation and programming necessary to perform the appropriate routing was very well-known to POSITAs and trivial to implement. Indeed, basic multiplexer functionality was commonly described in engineering textbooks. *See, e.g.*, EX1055 (Baker), 284-288 ("*control lines*" for switching); *see also* EX1015 (Chang II), [0038] ("*CPU 135*" receives the host/device detection signal to "*control[]*" switching). A POSITA would have naturally integrated detection functionality into the hub, bridge, or switch to utilize an existing encasing and

Microchip Ex. 1013, p. 150
Microchip v. Aptiv
IPR2024-00228

Aptiv Exhibit 2011 Page 150
Microchip v. Aptiv IPR2024-00229

DocuSign Envelope ID: 21006CD8-3A89-44EF-9ECF-DF7EDF8B0033

leverage existing logic or CPU capabilities. *See, e.g.*, *id.*, Fig. 5 (detection unit part of bridge "*control chip*"). Thus, Ground 1 satisfies claim 3 ("*the USB hub module is configured to recognize whether the consumer device connected to the second USB port is in the USB host mode or in the USB device mode and control the USB routing switch accordingly*").

4. Claim 4

260. Claim 4 is a dependent claim that depends from claim 1 and states "*the USB hub module is configured to dynamically switch operation of the second USB port between supporting the consumer device in the USB device mode or the USB host mode.*"

261. Ground 1 satisfies claim 4. Chang II discloses making a host/device determination and associated routing when a USB product is first plugged in. *See* EX1015 (Chang II), Fig. 6., [0042]-[0045]. Chang II explains that it "*automatically detect[s] the connecting device type and accordingly switch[es] between different transmission paths*." *Id.*, [0011]; *see also id.*, [0021], [0038].

262. A POSITA would understand "*dynamically switch[ing]*" between host/device paths during an existing connection to be within the scope of Chang II's disclosure. For example, Chang explains that it "*automatically and periodically*" performs a host/device check so "*control chip 13 can respectively switch to the bridge transmission path or the bypass path*." EX1015 (Chang II), [0024]. In this

Microchip Ex. 1013, p. 151
Microchip v. Aptiv
IPR2024-00228

Aptiv Exhibit 2011 Page 151
Microchip v. Aptiv IPR2024-00229

DocuSign Envelope ID: 21006CD8-3A89-44EF-9ECF-DF7EDF8B0033

regard, Chang II discloses that "*checking whether the user has exchanged for other external device* ***would occur constantly***." *Id.*, Fig. 6 (step 613 and 625), [0043] (emphasis added).

263. At a minimum, Chang II's disclosure regarding "*constantly*," "*periodically*," and "*automatically*" checking whether a host or device is connected—together with a POSITA's knowledge of the numerous dual-role products available (*see* §VI.B) that "*change roles dynamically*" (EX1003 ('420 patent), 3:18-56; *see also* EX1025 (Castleberry), 4:17-22)—render it obvious to a POSITA to periodically recheck the current device/host mode of a connected USB product and "*dynamically switch*" paths accordingly. The motivations for a POSITA to support this functionality include improving the user experience and avoiding the need for user to unplug/replug their USB products on account of a host/device mode change (which the user may not even be aware of).

264. Given that only minimal, if any, changes would be necessary to perform dynamic host/device detection and accompanying crossbar rerouting to "*dynamically switch*" an existing port from a host-to-host connection to a host-to-device connection, a POSITA would have had a reasonable expectation of success in doing so. For example, it would be easy for a POSITA to implement minor changes to Chang II's algorithm in Fig. 6 (*viz.*, adjusting steps S613 and S625 to check for a mode change regardless of whether the user plugged in another USB

Microchip Ex. 1013, p. 152
Microchip v. Aptiv
IPR2024-00228

Aptiv Exhibit 2011 Page 152
Microchip v. Aptiv IPR2024-00229

DocuSign Envelope ID: 21006CD8-3A89-44EF-9ECF-DF7EDF8B0033

product) for this purpose. The unmodified (left) and modified (right) version of Fig. 6 are shown below.

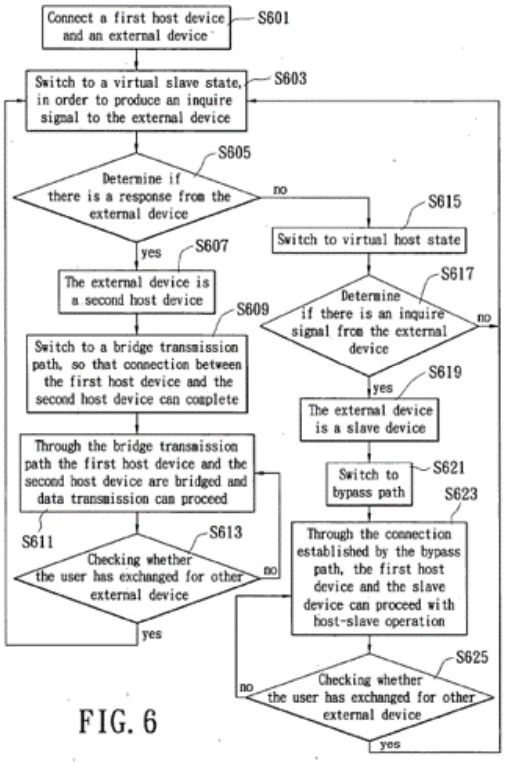

FIG. 6

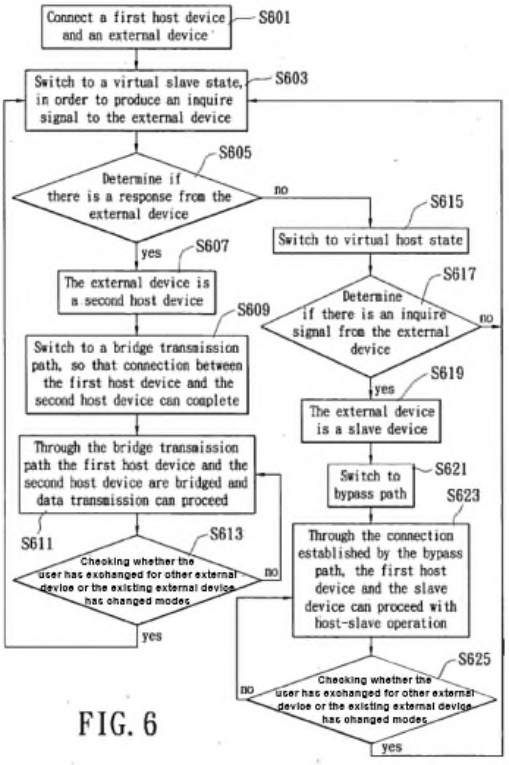

FIG. 6

UNMODIFIED **MODIFIED**

265. Moreover, dynamic switching was well-known to POSITAs in 2013, and could be accomplished using "*standard hardware components*." *See, e.g.*, EX1025 (Castleberry), 4:17-35. The Castleberry reference explains that its "*USB unit 202 can be configured to* ***switchably alternate, in a dynamic fashion****, between the [Host/Device] mode … when one of the devices is a portable device, such as a PDA or hand-held device, whose role may change …. To accomplish* ***switching in a dynamic fashion****, a signal can be provided … to enable switch 212 to select a*

Microchip Ex. 1013, p. 153
Microchip v. Aptiv
IPR2024-00228

Aptiv Exhibit 2011 Page 153
Microchip v. Aptiv IPR2024-00229

DocuSign Envelope ID: 21006CD8-3A89-44EF-9ECF-DF7EDF8B0033

particular mode." *Id*. (emphasis added). Castleberry further discloses dynamic mode switching "*at power up* ***or more frequently during operation***." *Id*. (emphasis added).

266. Thus, Ground 1 satisfies and renders obvious "*the USB hub module* [*i.e.*, collection of all claimed components] *is configured to dynamically switch operation* [crossbar switching between host-device and host-host paths for the same product] *of the second USB port* [port 50] *between supporting the consumer device in the USB device mode or the USB host mode* [dual-role product changing roles]."

5. Claim 5

267. Claim 5 is a dependent claim that depends from claim 1 and states "*the USB routing switch is configured to connect the consumer device to either the USB bridge or the USB hub based on whether the consumer device attached to the second USB port is configured to act as the USB host or a USB device.*"

268. As my motivation to combine discussion explains (*see* §IX), and as discussed in the Technology Background (*see* §VI.B) and analyzed in claim elements 1[f]-[g] and claim 2, it would have been obvious to make port 50 (and ports 44) dual-role ports and include crossbar routing to directly connect the downstream USB product on port 50 (or ports 44) to the hub (*i.e.*, host-to-device connection) or to route the port to the hub through the bridge (host-to-host connection). As discussed in the motivation to combine, doing this involves detecting (or being

Microchip Ex. 1013, p. 154
Microchip v. Aptiv
IPR2024-00228

Aptiv Exhibit 2011 Page 154
Microchip v. Aptiv IPR2024-00229

DocuSign Envelope ID: 21006CD8-3A89-44EF-9ECF-DF7EDF8B0033

informed of) the host/device status of each downstream product, which was well-known and easy for POSITAs to implement. *See* §VI.B.1. Accordingly, Ground 1 satisfies claim 5.

6. Claim 6

269. Claim 6 is a dependent claim that depends from claim 1 and states "*the USB bridge is configured to control the USB routing switch.*"

270. Claim 6 is obvious in view of Ground 1. The "*bridge device*" in Chang II controls routing. In particular, the "*Bridge Device 1*" in Fig. 1 of Chang II includes "*control chip 13*," which is shown in greater detail in Fig. 5 of Chang II. The control chip 13 includes a detection unit 134 and a CPU 135. EX1015 (Chang II), [0022]-[0023], [0034]. The CPU and detection unit are responsible for controlling switching: the detection unit "*determine[s] the type of device currently connected*" (*i.e.*, host or device) and sends the CPU a "*detection signal*" which the CPU uses to send the signals to switch to the appropriate host or bypass path. *Id.*, [0038]-[0039].

271. By applying this teaching to Chang, the bridge in Ground 1 would be configured to manage the control inputs for the crossbar. *See* EX1063, 7 ("*control logic inputs, C0, C1, and C2, [] control the switch connection*s."); EX1060, 1 (multiplexer select lines); EX1055 (Baker), 284-288. Indeed, in view of the teachings of Chang II, the bridge in Chang would have been understood to include a controller, CPU, or similar logic (as disclosed in Chang II's bridge control chip

Microchip Ex. 1013, p. 155
Microchip v. Aptiv
IPR2024-00228

Aptiv Exhibit 2011 Page 155
Microchip v. Aptiv IPR2024-00229

DocuSign Envelope ID: 21006CD8-3A89-44EF-9ECF-DF7EDF8B0033

13) for controlling routing. At a minimum, it would have been obvious and advantageous to use existing logic/resources on a bridge chip (such as the control chip 13 in Chang II) to save costs.

7. Claim 7

272. Claim 7 is an independent claim. I analyze claim 7 primarily by reference to independent claim 1 because the two claims share so many similarities. To help see the similarities and minor differences, the table below shows a side-by-side comparison of the two claims. Color coding is used to indicate common elements.

Claim 7	Claim 1
7. An integrated circuit, comprising:	1. A Universal Serial Bus (USB) hub module, comprising:
[a] a USB hub configured to be interconnected to a first USB port connected to a USB host and a second USB port connected to a consumer device;	[a] a first USB port configured to be connected to a USB host;
	[b] a second USB port configured to be connected to a consumer device;
	[c] a USB hub interconnected to the first USB port and the second USB port;
[b] a USB bridge interconnected to the USB hub; and	[d] a USB bridge interconnected to the USB hub; and
[c] a USB routing switch interconnected to the USB bridge, the USB hub, and the second USB port,	[e] a USB routing switch interconnected to the USB bridge, the USB hub, and the second USB port,
[d] wherein the USB routing switch is configured to connect the second USB	[f] wherein the USB routing switch is configured to connect the second USB

Microchip Ex. 1013, p. 156
Microchip v. Aptiv
IPR2024-00228

Aptiv Exhibit 2011 Page 156
Microchip v. Aptiv IPR2024-00229

DocuSign Envelope ID: 21006CD8-3A89-44EF-9ECF-DF7EDF8B0033

Claim 7	Claim 1
port to the first USB port through the USB bridge thereby providing bidirectional initiation of communication between the USB host and the consumer device when the consumer device connected to the second USB port is in a USB host mode and	port to the first USB port through the USB bridge, thereby providing bidirectional initiation of communication between the USB host and the consumer device when the consumer device connected to the second USB port is in a USB host mode and
[e] wherein the USB routing switch is configured to connect the second USB port directly to the first USB port through the USB hub, thereby only responding to communication initiated by the USB Host when the consumer device connected to the second USB port is in a USB device mode.	[g] wherein the USB routing switch is configured to connect the second USB port directly to the first USB port through the USB hub, thereby only responding to communication initiated by the USB Host when the consumer device connected to the second USB port is in a USB device mode.

273. As can be seen, most of the claim language (*i.e.*, for claim elements 7[b] through 7[e]) is identical. Even though claim 1 is broken up into elements 1[a], 1[b], and 1[c], those elements collectively correspond (and are substantively the same as) claim element 7[a]. Any minor differences in the language of 7[a] and elements 1[a]-[c] (*viz.*, "*connected*" versus "*interconnected*" or "*configured to be [inter]connected*") does not change my opinion. The only noteworthy difference in language between claims 1 and 7 is the preamble. Apart from the preamble, both Crossbar Implementations satisfy claim 7 for the same reasons I discussed from claim 1.

Microchip Ex. 1013, p. 157
Microchip v. Aptiv
IPR2024-00228

Aptiv Exhibit 2011 Page 157
Microchip v. Aptiv IPR2024-00229

DocuSign Envelope ID: 21006CD8-3A89-44EF-9ECF-DF7EDF8B0033

274. I offer no opinion on whether the preamble of claim 7 is or is not limiting. However, if the preamble is considered to be a limitation, my opinion is that Ground 1 satisfies it. The preamble of claim 7 recites "*An integrated circuit*," whereas the preamble of claim 1 recites "*A Universal Serial Bus (USB) hub module*." In my analysis of the preamble of claim 1, I explained why it would be obvious to locate each of the components recited in the claim in the plastic enclosure or metal casing. I further explained why it would be obvious to integrate the components (*viz*., hub, bridge, routing switch, etc.) at the IC level (*i.e.*, place them on the same IC). I reiterate part of that analysis here.

275. Both Chang and Chang II lead a POSITA to use the obvious conclusion of co-locating the recited components into one integrated circuit. Chang discloses that its bridge can be built into a hub, and that doing so would be known to "*an integrated circuit (IC) designer*," which I understand to mean a POSITA in this context. EX1014 (Chang), [0022]. I agree with Chang's assertion. Chang II illustrates a single "*control chip 13*" in Fig. 2 (highlighted below) that contains/integrates CPU 135, detection unit 134, first USB controller 131, second USB controller 132, buffer unit 136, etc. into a single IC. EX1015 (Chang II), [0023], [0034] ("*a control chip 13 … includes: a first USB controller 131, a second USB controller 132, a bypass circuit unit 133, a detection unit 134, a central processing unit (CPU) 135, and a buffer unit 136*").

Microchip Ex. 1013, p. 158
Microchip v. Aptiv
IPR2024-00228

Aptiv Exhibit 2011 Page 158
Microchip v. Aptiv IPR2024-00229

DocuSign Envelope ID: 21006CD8-3A89-44EF-9ECF-DF7EDF8B0033

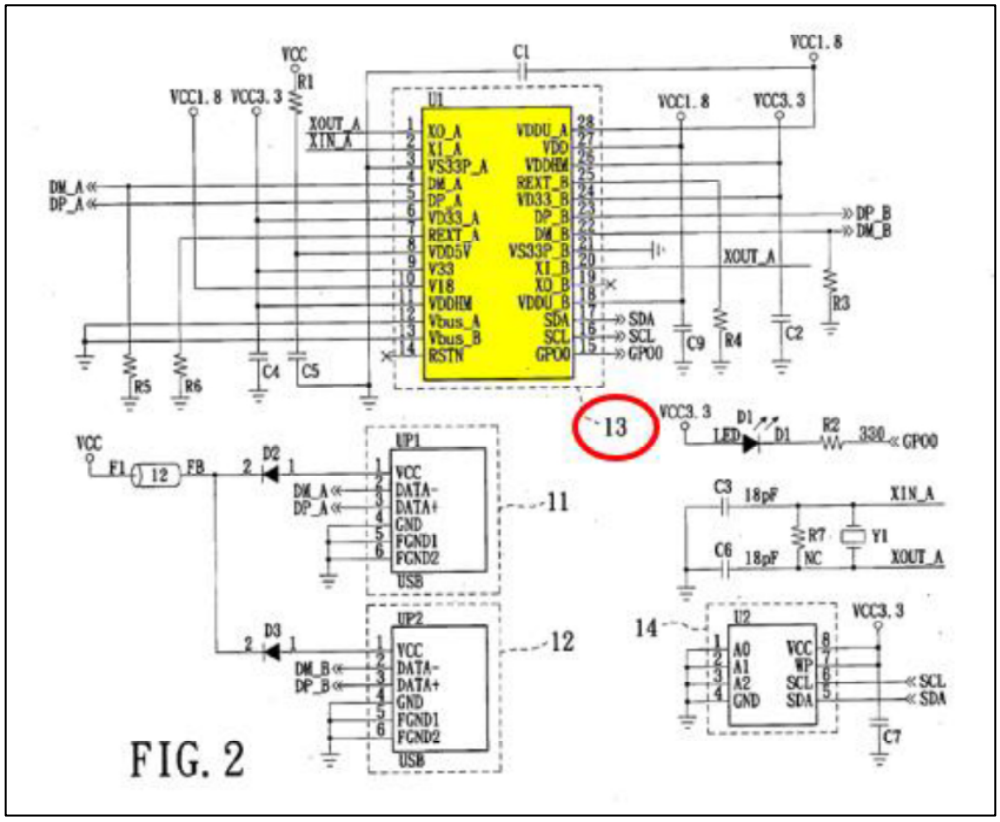

FIG. 2

Id., Fig. 2 (annotated).

276. Chang II's "*control chip 13*" also implements the host/device detection and switching functionality. *Id.*, EX1015 (Chang II), Figs. 1, 5, [0034], [0037]-[0038], [0040]. As it relates to Ground 1's crossbar in particular, Hesse discloses that its USB "*crossbar switch*" was on the same SoC (System-on-Chip) as the USB controller and other components. EX1017 (Hesse), [0057], [0059], [0063], [0070]. Integrating multiple components onto one IC was common/standard practice for USB products (including USB hubs) because the benefits (like reduced assembly

DocuSign Envelope ID: 21006CD8-3A89-44EF-9ECF-DF7EDF8B0033

costs, cheaper silicon, sharing logic, smaller footprint, etc.) of integrating components on a single IC such were well-known.

277. I note that the '420 patent discloses virtually nothing about how or why a single IC would be used. The reason for this is because, as discussed above, both the implementation and reasons for doing so were well-known to POSITAs. For all these reasons, a POSITA would have been motivated to include the various components of claim 7 in an "*integrated circuit*," as the preamble recites.

278. Accordingly, in summary, Ground 1 satisfies the actual elements of claim 7 for the same reasons as claim 1, and Ground 1 renders obvious the preamble of claim 7 (if it is a limitation at all) as described above.

8. Claim 8

279. As shown in the table below, the additional limitations of claim 8 is present in claim 2 and claim 8 is met for the same reasons.

Claim 8	Claim 2
8. The integrated circuit according to claim 7,	2. The USB hub module according to claim 1,
[a] wherein the USB routing switch is configured to connect the second USB port to the first USB port through the USB bridge thereby providing bidirectional initiation of communication between the USB host and the consumer device when the consumer device connected to the	[a] wherein the USB routing switch is configured to connect the second [downstream] USB port to the first USB port through the USB bridge thereby providing bidirectional initiation of communication between the USB host and the consumer device when the consumer device connected

Microchip Ex. 1013, p. 160
Microchip v. Aptiv
IPR2024-00228

Aptiv Exhibit 2011 Page 160
Microchip v. Aptiv IPR2024-00229

DocuSign Envelope ID: 21006CD8-3A89-44EF-9ECF-DF7EDF8B0033

Claim 8	Claim 2
second USB port is in the USB host mode and	to the second USB port is in the USB host mode and
[b] wherein the USB routing switch is configured to simultaneously connect another second USB port directly to the first USB port through the USB hub, thereby only responding to communication initiated by the USB Host when another consumer device connected to the another second USB port is in the USB device mode.	[b] wherein the USB routing switch is configured to simultaneously connect another second USB port directly to the first USB port through the USB hub, thereby only responding to communication initiated by the USB Host when another consumer device connected to the another second USB port is in the USB device mode.

9. Claim 9

280. As shown in the table below, the additional limitation of claim 9 is present in claim 3 and claim 9 is met for the same reasons.

Claim 9	Claim 3
9. The integrated circuit according to claim 7, wherein the integrated circuit is configured to recognize whether the consumer device connected to the second USB port is in the USB host mode or in the USB device mode and control the USB routing switch accordingly.	3. The USB hub module according to claim 1, wherein the USB hub module is configured to recognize whether the consumer device connected to the second USB port is in the USB host mode or in the USB device mode and control the USB routing switch accordingly.

10. Claim 10

281. As shown in the table below, the additional limitation of claim 10 is present in claim 4 and claim 10 is met for the same reasons.

Microchip Ex. 1013, p. 161
Microchip v. Aptiv
IPR2024-00228

Aptiv Exhibit 2011 Page 161
Microchip v. Aptiv IPR2024-00229

DocuSign Envelope ID: 21006CD8-3A89-44EF-9ECF-DF7EDF8B0033

Claim 10	Claim 4
10. The integrated circuit according to claim 7, wherein the integrated circuit is configured to dynamically switch operation of the second USB port between supporting the consumer device in the USB device mode or the USB host mode.	4. The USB hub module according to claim 1, wherein the USB hub module is configured to dynamically switch operation of the second USB port between supporting the consumer device in the USB device mode or the USB host mode.

11. Claim 11

282. As shown in the table below, the additional limitation of claim 11 is present in claim 5 and claim 11 is met for the same reasons.

Claim 11	Claim 5
11. The integrated circuit according to claim 7, wherein the USB routing switch is configured to connect the consumer device to either the USB bridge or the USB hub based on whether the consumer device attached to the second USB port is configured to act as the USB host or a USB device.	5. The USB hub module according to claim 1, wherein the USB routing switch is configured to connect the consumer device to either the USB bridge or the USB hub based on whether the consumer device attached to the second USB port is configured to act as the USB host or a USB device.

12. Claim 12

283. As shown in the table below, the additional limitation of claim 12 is present in claim 6 and claim 12 is met for the same reasons.

Claim 12	Claim 6
12. The integrated circuit according to claim 7, wherein the USB bridge is	6. The USB hub module according to claim 1, wherein the USB bridge is

Microchip Ex. 1013, p. 162
Microchip v. Aptiv
IPR2024-00228

Aptiv Exhibit 2011 Page 162
Microchip v. Aptiv IPR2024-00229

DocuSign Envelope ID: 21006CD8-3A89-44EF-9ECF-DF7EDF8B0033

configured to control the USB routing switch.	configured to control the USB routing switch.

13. Claim 15

284. Claim 15 is an independent claim. It is similar in many respects to independent claims 1 and 7, and both modified Crossbar Implementations satisfy claim 15 for much the same reasons. The biggest difference relative to claims 1 and 7 is that claim 15 does not include a requirement of a "*USB hub*." I am informed and understand, however, that the presence of a hub is allowed because claim 15 is a "comprising" claim. I note that the '420 patent focuses heavily on USB hubs, which are discussed extensively throughout the specification and figures. Indeed, claim 15 reads on Figs. 4 and 5 of the '420 patent, which both include a USB hub. For these reasons, it is natural to discuss prior art that is in the same vein. In this regard, I analyze claim 15 (and its dependent claims) using the same Crossbar Implementations resulting from the combination of Chang and Chang II (with the knowledge of a POSITA) that I have discussed previously for claims 1-12. The Crossbar Implementations are reproduced below for reference, except that the "hub" element is not called out:

Microchip Ex. 1013, p. 163
Microchip v. Aptiv
IPR2024-00228

Aptiv Exhibit 2011 Page 163
Microchip v. Aptiv IPR2024-00229

DocuSign Envelope ID: 21006CD8-3A89-44EF-9ECF-DF7EDF8B0033

Chang (Hub 46)

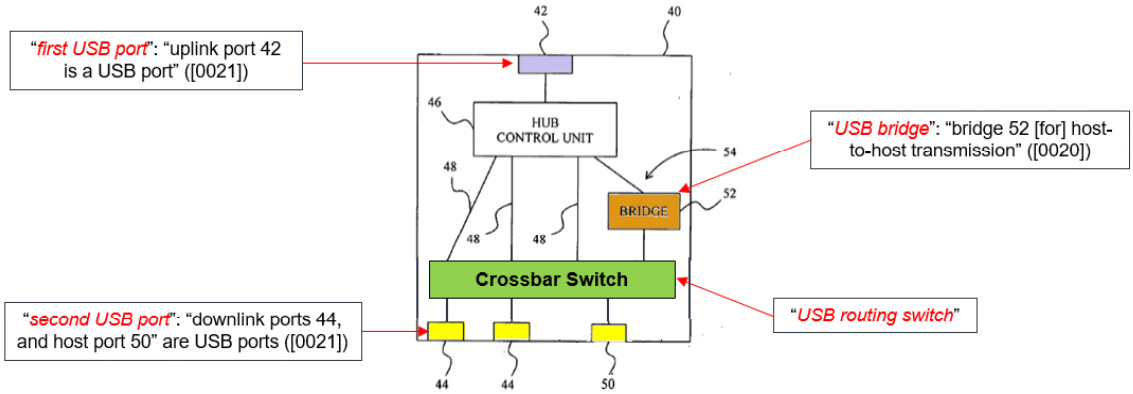

Chang (Hub 40)

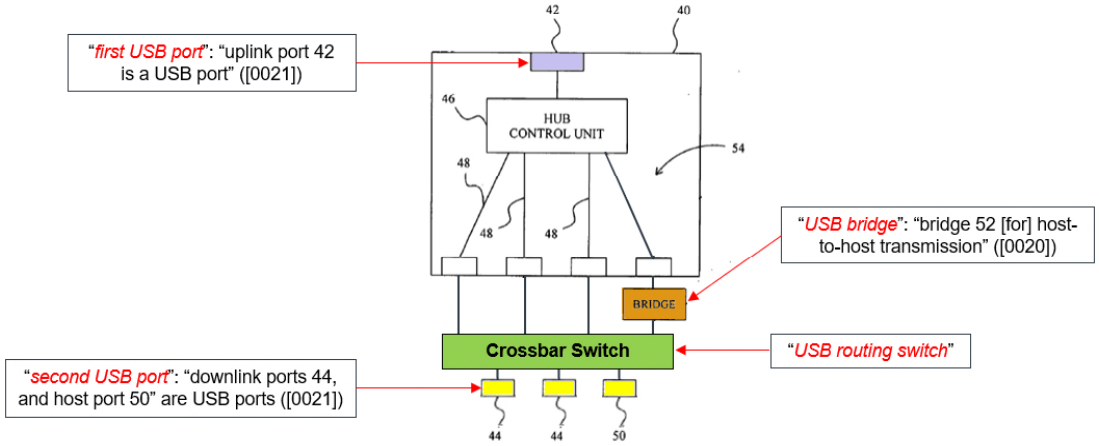

EX1014 (Chang), Fig. 3 (modified and annotated).

a. [Preamble]: "A Universal Serial Bus (USB) connectivity module, comprising:"

285. I offer no opinion on whether the preamble is or is not limiting. However, if the preamble is considered to be a limitation, my opinion is that Ground 1 satisfies it for substantially the same reasons that the preamble of claim 1 is satisfied by the Crossbar Implementations. The only difference is that claim 15

DocuSign Envelope ID: 21006CD8-3A89-44EF-9ECF-DF7EDF8B0033

refers to a USB "*connectivity module*" and claim 1 refers to a USB "*hub module*." The specification of the '420 patent does not use the term "*connectivity module*" anywhere. However, in view of the repeated discussion and illustrations of a USB "hub module" in the '420 patent, a POSITA would understand that a USB hub module is an example of a USB connectivity module. EX1003 ('420 patent), 4:31-40, 4:63-5:1, 5:50-53, 6:2-5, 8:44-45, Figs. 4-5 (each depicting a "*USB Hub Module*"); *see also id.*, 1:17-24 (describing "*connectivity*" achieved using a "*USB hub*"). Thus, if the preamble is limiting, Ground 1 satisfies because it discloses a USB hub module (for the reasons I explained for the preamble of claim 1) which is an example of a USB "*connectivity module*."

b. 15[a] "a first USB port;"

286. Claim element 15[a] is satisfied for the same reasons as claim element 1[a], which also requires "*a first USB port*." In particular, the "*first USB port*" in the Crossbar Implementations is upstream port 42. *See* EX1014 (Chang), [0019] (discussing "*uplink port 42 for being linked to a host*").

c. 15[b] "a second USB port;"

287. Claim element 15[b] is satisfied for the same reasons as claim element 1[b], which also requires "*a second USB port*." In particular, the "*second USB port*" in the Crossbar Implementations is any of dual-role ports 44 and 50. *See* EX1014

Microchip Ex. 1013, p. 165
Microchip v. Aptiv
IPR2024-00228

Aptiv Exhibit 2011 Page 165
Microchip v. Aptiv IPR2024-00229

DocuSign Envelope ID: 21006CD8-3A89-44EF-9ECF-DF7EDF8B0033

(Chang), [0019] ("*several downlink ports 44 for being linked to devices*"); [0020]-[0021] ("*port 50 is a USB port*").

d. 15[c]: "a USB host-to-host bridge connected to said first USB port;"

288. Each Crossbar Implementation satisfies claim element 15[c]. To begin, Chang teaches that its "*bridge 52 provides a function for host-to-host communications*." EX1014 (Chang), [0020]. Thus, Chang's bridge 52 is a "*USB host-to-host bridge*." Chang's bridge 52 in the Crossbar Implementations is "*connected to said first USB port*" (*i.e.*, upstream port 42) in the same way that the '420 patent depicts its "*Bridge IC*" being "*connected to*" the upstream USB port. *See, e.g.*, EX1003 ('420 patent), Fig. 4. In particular, the bridge is connected to the upstream port through the hub. Chang states that "*[w]ith the hub control unit 46 and bridge 52, a host-to-host transmission path 54 may be established such that the uplink port 42 may communicate with the host port 50*." EX1014 (Chang), [0020]. Other claims in the '420 patent confirm this type of connection (*i.e.*, where one component connects to a second component through a third component). For example, claim element 1[g] recites that "*the USB routing switch is configured to connect the second USB port directly to the first USB port* ***through the USB hub***." Indeed, claim element 1[f] even refers to this connection that goes "*through the USB hub*" as a "*direct[]*" connection. Claim element 15[c] does not even require a "direct" connection between the bridge an upstream port, only that the bridge is

Microchip Ex. 1013, p. 166
Microchip v. Aptiv
IPR2024-00228

Aptiv Exhibit 2011 Page 166
Microchip v. Aptiv IPR2024-00229

DocuSign Envelope ID: 21006CD8-3A89-44EF-9ECF-DF7EDF8B0033

"*connected to*" the upstream port. In each Crossbar Implementation, the bridge is "*connected to*" the upstream port through the hub.

e. 15[d]: "a USB routing switch connected to said first USB port, said second USB port and said USB host-to-host bridge,"

289. Claim element 15[d] is substantially similar to claim element 1[e] (as shown in the color-coded table below) and is met for largely the same reasons. Claim element 15[d] recites "*connected to*" instead of "*interconnected to*" as in claim element 1[e], but this minor linguistic difference does not impact my analysis.

Element 15[d]	Element 1[e]
a USB routing switch connected to said first USB port, said second USB port and said USB host-to-host bridge,	a USB routing switch interconnected to the USB bridge, the USB hub, and the second USB port,

290. The only substantive difference between claim element 15[d] and 1[e] is that element 15[d] says the routing switch is connected to the "*first USB port*" instead of the "*USB hub*" as recited in element 1[e]. But the routing switch (*i.e.*, crossbar) in the Crossbar Implementations is "*connected to*" the upstream port 42 (*i.e.*, the "*first USB port*") in the same manner that the bridge in element 15[c] is connected to the upstream port (*i.e.*, the crossbar connects to the upstream port ***through the hub***), and the same analysis applies. Thus, both Crossbar Implementations of Ground 1 satisfy claim element 15[d].

Microchip Ex. 1013, p. 167
Microchip v. Aptiv
IPR2024-00228

Aptiv Exhibit 2011 Page 167
Microchip v. Aptiv IPR2024-00229

DocuSign Envelope ID: 21006CD8-3A89-44EF-9ECF-DF7EDF8B0033

f. 15[e]: "wherein said USB routing switch is configured to provide a communication link between said first USB port and said second USB port through said USB host-to-host bridge, thereby providing bidirectional initiation of communication between the USB host and the consumer device when a first consumer device connected to said second USB port is operating in a USB host mode and"

291. Claim element 15[e] is substantially similar to claim element 1[f] (as shown in the color-coded table below) and is met for largely the same reasons.

Element 15[e]	Element 1[f]
wherein said USB routing switch is configured to provide a communication link between said first USB port and said second USB port through said USB host-to-host bridge,	wherein the USB routing switch is configured to connect the second USB port to the first USB port through the USB bridge,
thereby providing bidirectional initiation of communication between the USB host and the consumer device when a first consumer device connected to said second USB port is operating in a USB host mode and	thereby providing bidirectional initiation of communication between the USB host and the consumer device when the consumer device connected to the second USB port is in a USB host mode and

292. The only linguistic difference worth noting is that claim element 15[e] refers to providing a "*communication link*" between the first and second USB ports, whereas element 1[f] says "*connect[ing]*" the first and second USB ports. The '420 specification does not even use the phrase "*communication link*." Nothing in the '420 patent changes the plain and ordinary meaning of "*communication link*," and a POSITA would understand that the act of "*connect[ing]*" the first and second ports is what forms a "*communication link*" between those ports. This is supporting by

Microchip Ex. 1013, p. 168
Microchip v. Aptiv
IPR2024-00228

Aptiv Exhibit 2011 Page 168
Microchip v. Aptiv IPR2024-00229

DocuSign Envelope ID: 21006CD8-3A89-44EF-9ECF-DF7EDF8B0033

the surrounding claim language in element 15[e] which says it is the "*routing switch*" that provides the "*communication link*." Because "*connect[ing]*" the ports is what forms a "*communication link*," my analysis of claim element 1[f] applies equally to claim element 15[e]. Accordingly, the Crossbar Implementations of Ground 1 satisfy element 15[e] as explained in my analysis of claim element 1[f].

g. 15[f]: "wherein said USB routing switch is configured to provide another communication link between said first USB port and said second USB port that bypasses said USB host-to-host bridge, thereby only responding to communication initiated by the USB host when the first consumer device connected to said second USB port is operating in a USB device mode."

293. Claim element 15[f] is substantially similar to claim element 1[g] (as shown in the color-coded table below) and is met for largely the same reasons.

Element 15[f]	Element 1[g]
wherein said USB routing switch is configured to provide another communication link between said first USB port and said second USB port that bypasses said USB host-to-host bridge,	wherein the USB routing switch is configured to connect the second USB port directly to the first USB port through the USB hub,
thereby only responding to communication initiated by the USB host when the first consumer device connected to said second USB port is operating in a USB device mode.	thereby only responding to communication initiated by the USB Host when the consumer device connected to the second USB port is in a USB device mode.

294. The same "*communication link*" versus "*connect[ing]*" comparison I performed when analyzing claim element 15[e] applies here (*viz.*, the act of

Microchip Ex. 1013, p. 169
Microchip v. Aptiv
IPR2024-00228

Aptiv Exhibit 2011 Page 169
Microchip v. Aptiv IPR2024-00229

DocuSign Envelope ID: 21006CD8-3A89-44EF-9ECF-DF7EDF8B0033

"*connect[ing]*" the first and second USB ports is how the routing switch provides the claims "*communication link*"). There is one additional wording difference between claim elements 15[f] and 1[g] that warrants addressing. In particular, element 1[g] refers to "*directly*" connecting the first and second USB ports "*through the USB hub*," whereas element 15[f] recites "*bypass[ing] said USB host-to-host bridge*" when providing the communication link between ports. Because, as shown by the Crossbar Implementations and analysis for claim element 1[g], the host-to-device connection does not go through the USB bridge, but bypasses the bridge entirely, the Crossbar Implementations satisfy element 15[f] for the reasons explained in connection with element 1[g].

14. Claim 16

295. Claim 16 is a dependent claim that depends from claim 15 and states "*[16][a] a third USB port, [16][a][i] wherein said USB routing switch is configured to provide a first communication link between said first USB port and said second USB port through said host*[18] *host-to-host bridge, thereby providing bidirectional initiation of communication between the USB host and the consumer device when the first consumer device connected to said second USB port is operating in the USB*

[18] The phrase"*host host-to-host bridge*" appears to be a typographical error that should read "*USB host-to-host bridge*."

Microchip Ex. 1013, p. 170
Microchip v. Aptiv
IPR2024-00228

Aptiv Exhibit 2011 Page 170
Microchip v. Aptiv IPR2024-00229

DocuSign Envelope ID: 21006CD8-3A89-44EF-9ECF-DF7EDF8B0033

host mode and [16][a][ii] wherein said USB routing switch is configured to provide simultaneously provide a second communication link between said first USB port and said third USB port that bypasses said USB host-to-host bridge, thereby only responding to communication initiated by the USB Host when a second consumer device connected to said third USB port is operating in the USB device mode."

296. Although verbose, claim 16 is actually quite simple. It requires two "*communication link[s]*" through which an upstream port ("*first port*") can simultaneously communicate with a downstream "*second USB port*" connected to a USB host (*i.e.*, a host-to-host connection) and a downstream "*third USB port*" connected to a USB device (*i.e.*, a host-to-device connection). Thus, claim 16 is substantively similar to claim 2 and is met for the same reasons. *See also* element 15[e] (corresponding to 17[a][ii]) and 15[f] (corresponding to 17[a][iii]). To show the similarities, the table below provides a side-by-side comparison of the two claims. Color coding is used to indicate common elements.

Claim 16	**Claim 2**
16. The USB connectivity module according to claim 15, further comprising	2. The USB hub module according to claim 1,
[a] a third USB port,	
[a][i] wherein said USB routing switch is configured to provide a first communication link between said first	[a] wherein the USB routing switch is configured to connect the second USB port to the first USB port through the USB bridge

Microchip Ex. 1013, p. 171
Microchip v. Aptiv
IPR2024-00228

Aptiv Exhibit 2011 Page 171
Microchip v. Aptiv IPR2024-00229

DocuSign Envelope ID: 21006CD8-3A89-44EF-9ECF-DF7EDF8B0033

Claim 16	Claim 2
USB port and said second USB port through said host host-to-host bridge,	
thereby providing bidirectional initiation of communication between the USB host and the consumer device when the first consumer device connected to said second USB port is operating in the USB host mode and	thereby providing bidirectional initiation of communication between the USB host and the consumer device when the consumer device connected to the second USB port is in the USB host mode and
[a][ii] wherein said USB routing switch is configured to provide simultaneously provide a second communication link between said first USB port and said third USB port that bypasses said USB host-to-host bridge,	[b] wherein the USB routing switch is configured to simultaneously connect another second USB port directly to the first USB port through the USB hub,
thereby only responding to communication initiated by the USB Host when a second consumer device connected to said third USB port is operating in the USB device mode.	thereby only responding to communication initiated by the USB Host when another consumer device connected to the another second USB port is in the USB device mode.

297. Although claim 16 recites a "*third USB port*" instead of "*another second USB port*" as in claim 2, this makes no difference to my analysis. Claim 16 also refers to first and second "*communication link[s]*" between the respective ports, whereas claim 2 recites "*connect[ing]*" the ports to one another. Again, this makes no difference to my analysis since the act of "*connect[ing]*" the ports form a "*communication link*" between the ports. The other minor difference in claim language I note is that claim element 16[a][ii] says the host-to-device connection "*bypasses*" the bridge, whereas claim element 2[b] says the hub "*directly*" connects

Microchip Ex. 1013, p. 172
Microchip v. Aptiv
IPR2024-00228

Aptiv Exhibit 2011 Page 172
Microchip v. Aptiv IPR2024-00229

DocuSign Envelope ID: 21006CD8-3A89-44EF-9ECF-DF7EDF8B0033

to the downstream device. The same host-to-device connection in the Crossbar Implementations satisfies element 2[b]'s "*direct[]*" host-to-device connection requirement and meets element 16[a][ii]'s requirement that the host-to-device connection "*bypasses said USB host-to-host bridge*." Thus, the Crossbar Implementations meet claim 16 for the same reasons as claim 2. As was the case for claim 2, I note that the "*third downstream port*" in claim 16 could be any of the dual-role ports 44 or 50 in the Crossbar Implementations. EX1014 (Chang), [0019]-[0021].

15. Claim 17

298. Claim 17 is a dependent claim that depends from claim 15 and states "*[17][a] a third USB port, [17][a][i] wherein said USB routing switch is further connected to the third USB port, [17][a][ii] wherein said USB routing switch is configured to provide a first communication link between said first USB port and said second USB port through said USB host-to-host bridge, thereby providing bidirectional initiation of communication between the USB host and the consumer device when the first consumer device connected to said second USB port is operating in the USB host mode, and [17][a][iii] wherein said USB routing switch is configured to provide a second communication link between said first USB port and said third USB port that bypasses said USB host-to-host bridge, thereby only responding to communication initiated by the USB host when a second consumer*

Microchip Ex. 1013, p. 173
Microchip v. Aptiv
IPR2024-00228

Aptiv Exhibit 2011 Page 173
Microchip v. Aptiv IPR2024-00229

DocuSign Envelope ID: 21006CD8-3A89-44EF-9ECF-DF7EDF8B0033

device connected to said third USB port is operating in the USB device mode without interrupting the first communication link between said first USB port and said second USB port."

299. Claim 17 shares many similarities with claim 16, as shown in the table below which uses color coding to indicate common elements.

Claim 17	Claim 16
17. The USB connectivity module according to claim 15, further comprising	16. The USB connectivity module according to claim 15, further comprising
[a] a third USB port,	[a] a third USB port,
[a][i] wherein said USB routing switch is further connected to the third USB port,	
[a][ii] wherein said USB routing switch is configured to provide a first communication link between said first USB port and said second USB port through said USB host-to-host bridge, thereby providing bidirectional initiation of communication between the USB host and the consumer device when the first consumer device connected to said second USB port is operating in the USB host mode, and	[a][i] wherein said USB routing switch is configured to provide a first communication link between said first USB port and said second USB port through said host host-to-host bridge, thereby providing bidirectional initiation of communication between the USB host and the consumer device when the first consumer device connected to said second USB port is operating in the USB host mode and
[a][iii] wherein said USB routing switch is configured to provide a second communication link between said first USB port and said third USB port that bypasses said USB host-to-host bridge,	[a][ii] wherein said USB routing switch is configured to provide simultaneously provide a second communication link between said first USB port and said third USB port that bypasses said USB host-to-host bridge,

Microchip Ex. 1013, p. 174
Microchip v. Aptiv
IPR2024-00228

Aptiv Exhibit 2011 Page 174
Microchip v. Aptiv IPR2024-00229

DocuSign Envelope ID: 21006CD8-3A89-44EF-9ECF-DF7EDF8B0033

Claim 17	Claim 16
thereby only responding to communication initiated by the USB host when a second consumer device connected to said third USB port is operating in the USB device mode	thereby only responding to communication initiated by the USB Host when a second consumer device connected to said third USB port is operating in the USB device mode.
without interrupting the first communication link between said first USB port and said second USB port.	

300. The colored elements are met for the same reasons I described for claim 16 and I address only the additional limitations here. First, claim element 17[a][i] requires that the "*USB routing switch is further connected to the third USB port*." This requirement is readily shown by the Crossbar Implementations below where all of ports 44 and 50 are connected to the crossbar.

Microchip Ex. 1013, p. 175
Microchip v. Aptiv
IPR2024-00228

Aptiv Exhibit 2011 Page 175
Microchip v. Aptiv IPR2024-00229

DocuSign Envelope ID: 21006CD8-3A89-44EF-9ECF-DF7EDF8B0033

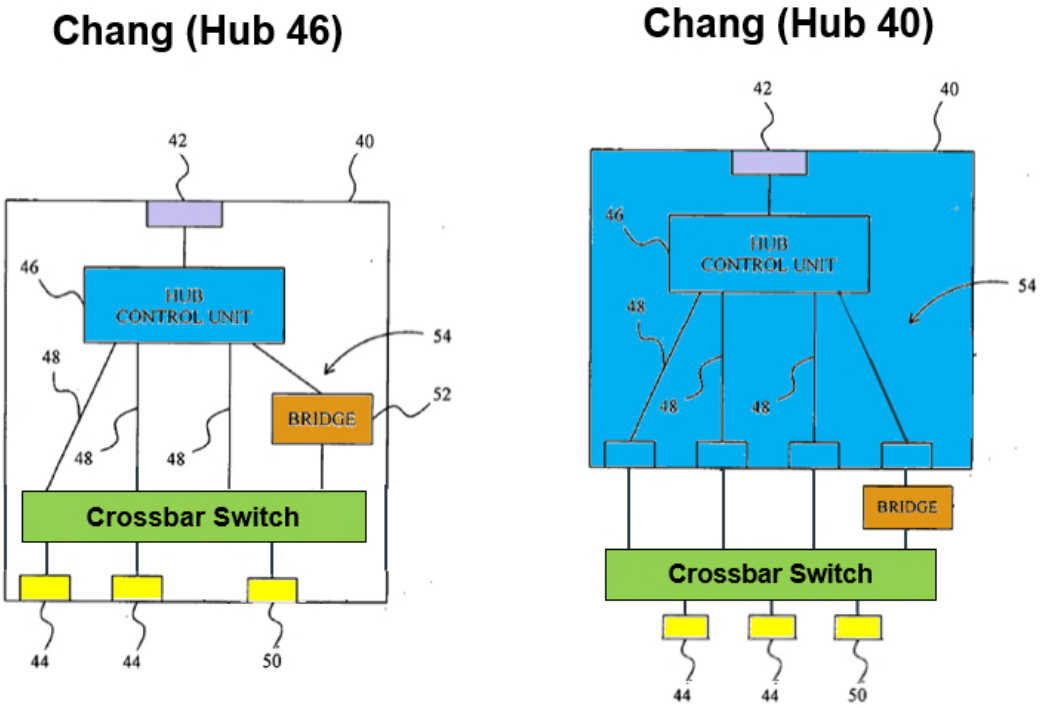

EX1014 (Chang), Fig. 3 (modified and annotated).

301. The only other language in claim 17 not present in claim 16 is found in claim element 17[a][iii], which further requires providing the second (host-to-device) communication link "*without interrupting the first communication link between said first USB port and said second USB port*" instead of "*simultaneously*" providing the second (host-to-device) communication link, as recited in element 16[a][ii]. To the extent the additional language of element 17[a][iii] adds anything to the "*simultaneous[]*" requirement of claim element 16[a][ii], the Crossbar Implementations satisfy it. The reason for this is two-fold: (1) the nature and purpose of USB hubs is to support multiple simultaneous connections (*see* §VI.A.2),

Microchip Ex. 1013, p. 176
Microchip v. Aptiv
IPR2024-00228

Aptiv Exhibit 2011 Page 176
Microchip v. Aptiv IPR2024-00229

DocuSign Envelope ID: 21006CD8-3A89-44EF-9ECF-DF7EDF8B0033

including the ability to plug/unplug downstream USB products without interrupting existing connections; and (2) the nature and purpose of USB host-to-host bridges is to present a USB device interface to each host connected to the bridge (*see* §VI.C; *see also* EX1054 (explaining that "*inherent[] incompatib[ility]*" of host-to-host communications is overcome by presenting "*two USB device[] [interfaces], one for each [host]*.")). The combination of these characteristic mean that the Crossbar Implementations (which combine a USB host-to-host bridge with the functionality of a traditional USB hub) can add a host-to-device connection "*without interrupting*" an existing host-to-device connection and thus satisfy element 17[a][iii]. Accordingly, all elements of claim 17 are met by Ground 1.

B. Secondary Considerations of Nonobviousness

302. Neither Aptiv nor the Examiner identified any secondary considerations that favored a finding of nonobviousness during prosecution of the Challenged Patents (or the other patents in the same family). *See generally* EX1002, EX1004, EX1006, EX1008, EX1010, EX1012. And I am unaware of any secondary considerations that tend to show nonobviousness of the Challenged Claims. I am informed by counsel for Microchip that Aptiv sued Microchip in a district court action asserting infringement of the Challenged Patents and two related patents (U.S. Pat. 9,460,037 and U.S. Pat. 10,545,899). Counsel for Microchip provided me with Aptiv's Interrogatory Response No. 4 from that case (EX1045) regarding secondary

Microchip Ex. 1013, p. 177
Microchip v. Aptiv
IPR2024-00228

Aptiv Exhibit 2011 Page 177
Microchip v. Aptiv IPR2024-00229

DocuSign Envelope ID: 21006CD8-3A89-44EF-9ECF-DF7EDF8B0033

considerations which I have reviewed. I understand from counsel that establishing the necessary "nexus" requires tying the evidence to what was not known in the prior art.

303. In its Interrogatory Response, Aptiv asserts that "*the following secondary considerations support the nonobviousness of the claimed inventions of the Aptiv Asserted Patents: commercial success, industry praise for Aptiv's innovative products, failure by Microchip to develop a solution like Aptiv's innovative products, and copying by Microchip of Aptiv's innovative products*." EX1045, 11. I disagree. I note that while many of Aptiv's alleged secondary consideration specifically relate to Apple CarPlay, the Challenged Claims do not recite or claim CarPlay or a specialized bridge. Rather, the Challenged Claims simply recite USB operations, such as use of a USB hub, host-to-device connection and host-to-host connection through a USB bridge, etc. that were standard and well-known (*e.g.*, Chang discloses a bridge that works in conjunction with a hub to enable a host-to-host connection). Additionally, Aptiv provides no patent-by-patent or claim-by-claim breakdown, and makes the same blanket assertions for all patent and all claims.

304. ***Industry Praise***. Aptiv asserts that it "*received industry praise and several awards based on the claimed invention. For example, in 2016, Aptiv won the Automotive News PACE Award for the Dual Role Hub, which heralded the Dual*

Microchip Ex. 1013, p. 178
Microchip v. Aptiv
IPR2024-00228

Aptiv Exhibit 2011 Page 178
Microchip v. Aptiv IPR2024-00229

DocuSign Envelope ID: 21006CD8-3A89-44EF-9ECF-DF7EDF8B0033

Role Hub as solving the 'vexing problem' of integrating an iPhone with a vehicle infotainment system." EX1045, 11. But Aptiv refers to only a single award, not "*multiple awards*." Before being engaged for this case, I had never heard of Aptiv's "Dual Role Hub," nor had I heard of the "Automotive News PACE Award." Aptiv cited no documents in support of its assertions. Aptiv did not provide the selection criteria for the award, nor am I aware that the award mentioned any of the Challenged Patents.

305. Having never heard of the award, I googled "Automotive News PACE Award 2016" and reviewed the first search result at www.autonews.com/awards/2016-automotive-news-pace-awards (pasted below). I immediately observed that the "PACE Awards" have little (if anything) to do with USB technology. On the contrary, there were over a dozen winners with a wide variety of products such as "*Water-cooled condenser*," "*Cover Carving Technology for seats*," and "*Electronic oil pump*," all of which are in areas that a POSITA would not even be familiar with.

Microchip Ex. 1013, p. 179
Microchip v. Aptiv
IPR2024-00228

Aptiv Exhibit 2011 Page 179
Microchip v. Aptiv IPR2024-00229

DocuSign Envelope ID: 21006CD8-3A89-44EF-9ECF-DF7EDF8B0033

2016

Organization Name	Winner Title
Valeo	Water-cooled condenser
Valeo	Electric supercharger
Faurecia Emissions Control Technologies	Exhaust System Adaptive Valve
Federal-Mogul Corp.	Hybrid induction-welding for steel pistons
Delphi Automotive	Dual Role Hub
FTE automotive GmbH	Electronic oil pump
Koito Manufacturing Co.	Dual-function LED headlamp
Bosch	Linear Force Solenoid
Gentex Corp.	Full Display Mirror
Magna Closures	Electronic door latch
Faurecia Automotive Seating	Cover Carving Technology for seats
Ichikoh Industries	MonoLED light source
GKN Driveline	Lightweight constant velocity joint

306. The linked description for the Aptiv award (*see* www.autonews.com/awards/2016-winner-delphi-automotive-dual-role-hub) says that the purported "*vexing problem*" was that an "*iPhone running CarPlay™ wanted to operate as the sole 'host' device taking control from the car radio and denying*

Microchip Ex. 1013, p. 180
Microchip v. Aptiv
IPR2024-00228

Aptiv Exhibit 2011 Page 180
Microchip v. Aptiv IPR2024-00229

DocuSign Envelope ID: 21006CD8-3A89-44EF-9ECF-DF7EDF8B0033

access to other devices."[19] While the award refers to CarPlay, none of the Challenged Claims recites CarPlay. And even the unmodified version of Chang Fig. 3's hub (which included a host-to-host bridge alongside several other simultaneous device connections) allows a downstream USB product to "*operate as the [sole] 'host' device [without] denying access to other devices*." Although CarPlay had not been developed when Chang was filed in 2005, there is no reason that the so-called "*vexing problem*" of a product that "*wanted to operate as the sole 'host' device …*" would not have worked (at most with simple modifications) with Chang's hub. This is largely due to the fact that Chang's hub is built with an off-the-shelf USB bridge, USB Hub, requires no violation of the USB specifications (*see* EX1014 (Chang), [0002]) and supports a product that wanted to act as host. Given that the prior art already disclosed the required features, I note the award article touts that Aptiv achieved "*a lower cost*" and "*cost effective solution*," which could be a reason for

[19] I note that Aptiv did not assert any "long-felt" need as a secondary consideration of nonobviousness. To the extent Apple CarPlay's requirement that the iPhone serve as host in the vehicle environment has any relevance to secondary considerations, it demonstrates obviousness. This is because the claimed solution was readily apparent to a POSITA upon knowing of Apple's design requirements.

Microchip Ex. 1013, p. 181
Microchip v. Aptiv
IPR2024-00228

Aptiv Exhibit 2011 Page 181
Microchip v. Aptiv IPR2024-00229

DocuSign Envelope ID: 21006CD8-3A89-44EF-9ECF-DF7EDF8B0033

the award. In my opinion, the PACE award does not support a finding of nonobviousness.

307. ***Commercial Success***. Aptiv asserts that its "*Dual Role Hub, which embodies the claimed inventions of the Aptiv Asserted Patents, was the first USB hub product that supported CarPlay and provided all the features sought by the vehicle manufacturers: (1) accommodating the head unit as a first host and the iPhone as a second host while running CarPlay; (2) providing persistent USB; and (3) using a single lane configuration. Aptiv secured several long-term supply contracts shortly after the Dual Role Hub entered the market, including with the 'Big Three' U.S. car manufacturers (General Motors ('GM'), Ford, and Fiat Chrysler Automobiles ('FCA,' now Stellantis)*." EX1045, 11. I disagree for at least three reasons.

308. First, Aptiv has not shown nor presented any evidence of commercial success for the Dual Role Hub, let alone established that any such purported success has the required nexus to the Challenged Claims. Should Aptiv attempt to establish commercial success (and that any such success was due to practicing the Challenged Claims), I reserve the right to rebut such assertions and evidence, including with countervailing evidence showing that any such commercial success was relatively modest compared to Microchip's sales of unaccused USB hubs in the automotive sector and/or lacked the required nexus (*i.e.*, connection) to the Challenged Claims.

Microchip Ex. 1013, p. 182
Microchip v. Aptiv
IPR2024-00228

Aptiv Exhibit 2011 Page 182
Microchip v. Aptiv IPR2024-00229

DocuSign Envelope ID: 21006CD8-3A89-44EF-9ECF-DF7EDF8B0033

More generally, there are many other features that any alleged commercial success could be attributable to, including (for example) pricing, marketing efforts, number and type of available downstream ports, power delivery options, etc.

309. Second, even the unmodified hub of Chang Fig. 3 provided the three features Aptiv mentions in its Interrogatory Response. Chang's hub (1) provides for a host-to-host connection through its bridge; (2) provides "*persistent*" USB (*i.e.*, user could plug/unplug a downstream USB host without disrupting the connection of other USB products and vice versa); and (3) has a "*single lane*" configuration[20] (*i.e.*, there was a single USB cable between the hub and the upstream host).

310. Third, the Challenged Claims do not recite or claim "*CarPlay*," any type of a novel bridge, or a "*single lane configuration*" at all. And few (if any) of Challenged Claims could be said to require the concept of "*persistent USB*."

311. In summary, in my opinion, Aptiv's alleged "commercial success" does not support a finding of nonobviousness.

312. ***Copying***. Aptiv's allegations regarding copying are vague and unclear. Aptiv states:

> *Although Microchip was aware of the Dual Role Hub by at least April 2014, Microchip was unable to develop, or market, a competing*

[20] *See* EX1003 ('420 patent), 3:24-34 (discussing sub-optimal solution with multiple cables between the hub and Head Unit).

Microchip Ex. 1013, p. 183
Microchip v. Aptiv
IPR2024-00228

Aptiv Exhibit 2011 Page 183
Microchip v. Aptiv IPR2024-00229

DocuSign Envelope ID: 21006CD8-3A89-44EF-9ECF-DF7EDF8B0033

> *solution (even an infringing one) until 2017. Indeed, Microchip believed for months that it was not possible to achieve persistent USB in a single-lane configuration. Microchip (incorrectly) dismissed Aptiv's (then Unwired) Dual Role Hub solution as not compliant with USB or Apple's CarPlay requirements. It was not until late January 2015 at the earliest that Microchip first believed it was even technically feasible to develop a solution comparable to Aptiv's Dual Role Hub. Microchip specifically sought to develop a solution similar to Unwired's. The first patent application of the Aptiv Asserted Patents published on March 26, 2015, describing the claimed inventions embodied by the Dual Role Hub and hub chip within in. By July 2015, Microchip had a business plan for its infringing Sandia products.*

EX1045, 12. To the extent Aptiv is insinuating that Microchip "*copied*" anything, Aptiv cites no supporting evidence. For example, Aptiv cites nothing to support its speculation that Microchip copied Aptiv's published patent application. In my opinion, Aptiv's unsubstantiated allegations of "*copying*" do not support a finding of nonobviousness. I reserve the right to supplement my opinions on this topic in response to any evidence Aptiv may provide.

313. ***Failure by Others***. With respect to failure by others, Aptiv asserts that around 2016 "*Microchip was considering two alternative solutions to CarPlay: FlexConnect and a dual lane solution. But FlexConnect did not allow for persistent USB, and the dual lane solution did not allow for a single lane configuration. Microchip thus failed to offer a solution to CarPlay that met all the features sought*

Microchip Ex. 1013, p. 184
Microchip v. Aptiv
IPR2024-00228

Aptiv Exhibit 2011 Page 184
Microchip v. Aptiv IPR2024-00229

DocuSign Envelope ID: 21006CD8-3A89-44EF-9ECF-DF7EDF8B0033

by the vehicle manufacturers. The Dual Role Hub remained the sole product on the market that did so, until Microchip began selling its infringing Sandia products in or around 2017." EX1045, 11-12. I first note that Aptiv does not even allege that anyone other than Microchip "*failed*." And, with respect to Microchip, Aptiv cites no evidence in support of its assertions. I have already explained above how prior art like Chang's hub satisfied the three purported "*features sought by the vehicle manufacturers*." And just because a company provided *different* solutions or introduced additional product offerings over time does not mean there was "failure by others." In my opinion, there is no showing of "failure by others" that supports a finding of nonobviousness. I reserve the right to supplement my opinions on this topic in response to any evidence Aptiv may provide.

314. ***Other***. Aptiv generically asserts that "*Microchip began a campaign to undermine Aptiv's market position. For example, in January 2015, Microchip sent a letter to Aptiv asserting meritless infringement claims. Microchip later filed suit asserting the same claims. Aptiv was found to not infringe the asserted patents at trial. See Microchip Tech. Inc. v. Aptiv Services US, LLC, 1:17-cv-1194-JDW, D.I. 37*." EX1045, 12. I am not aware that a lawsuit on other patents (regardless of the outcome) is a basis for a secondary consideration supporting nonobviousness.

***

Microchip Ex. 1013, p. 185
Microchip v. Aptiv
IPR2024-00228

Aptiv Exhibit 2011 Page 185
Microchip v. Aptiv IPR2024-00229

DocuSign Envelope ID: 21006CD8-3A89-44EF-9ECF-DF7EDF8B0033

315. In conclusion, I find that none of Aptiv's alleged secondary considerations support a finding of obviousness. And even if one or more secondary considerations could be said to tend toward nonobviousness, they would not (alone or in combination) be sufficient to counter the strong case of obviousness presented by the modified Mux and Crossbar Implementation of Chang Fig. 3 I have discussed. Even though Aptiv has not alleged other secondary considerations, I address them below.

316. ***Long-standing Problem or Need***. I am not aware of any long-felt or unresolved need for the claimed subject matter which, as previously noted, does not refer to CarPlay. But Aptiv refers to an "*iPhone running CarPlay*™" as a "*vexing problem*." To the extent that an iPhone running CarPlay was a problem at all, it was not a "long-standing" problem, as Apple announced CarPlay in June of 2013. *See* https://en.wikipedia.org/wiki/CarPlay. After the 2013 announcement, Apple worked with Ferrari, Mercedes-Benz, Volvo, BMW, Ford, GM, Honda, Hyundai, Jaguar Land Rover, Kia, Mitsubishi, Nissan, Subaru, Toyota and others to bring up early CarPlay implementations. Ferrari and Volvo demonstrated working systems at the March 2014 Geneva Motor Show (*see* https://9to5mac.com/2014/03/05/hands-on-demo-of-carplay-in-new-ferrari-volvo-vehicles-from-geneva-motor-show-video/ and www.cars.com/articles/apple-

Microchip Ex. 1013, p. 186
Microchip v. Aptiv
IPR2024-00228

Aptiv Exhibit 2011 Page 186
Microchip v. Aptiv IPR2024-00229

DocuSign Envelope ID: 21006CD8-3A89-44EF-9ECF-DF7EDF8B0033

unveils-carplay-for-volvo-mercedes-ferrari-at-2014-geneva-motor-show-1420663027611/).

317. Thus, once Apple increased the market demand for supporting an iPhone with CarPlay in host-mode when connected to a vehicle that already contained an embedded upstream host, companies quickly developed a variety of approaches/solutions, which suggests that the solutions were obvious. I note that Apple maintained the CarPlay specifications confidential in 2013 and required an NDA to obtain them. With the benefit of Apple's confidential technical specifications, the speed at which Aptiv and others came up with solutions to support CarPlay again suggest obviousness. Thus, if anything, this secondary consideration demonstrates obviousness, not nonobviousness.

318. ***Unexpected Results / Skepticism***. I am not aware of any unexpected results. The components (*e.g.*, USB hub, USB bridge, and USB multiplexers) were readily available off-the-shelf components that were simply used for their intended purposes when combined to create claimed subject matter. There is nothing unexpected about how these components work in combination—they simply perform their normal functions to achieve an expected result. Nor would a POSITA have been skeptical of this.

319. ***Commercial acquiescence of competitors***: I am not aware that anyone has licensed, or sought to license, the Challenged Patents.

Microchip Ex. 1013, p. 187
Microchip v. Aptiv
IPR2024-00228

Aptiv Exhibit 2011 Page 187
Microchip v. Aptiv IPR2024-00229

DocuSign Envelope ID: 21006CD8-3A89-44EF-9ECF-DF7EDF8B0033

XV. CONCLUSION

320. I am aware that this declaration will be filed as evidence in an IPR proceeding before the PTAB. I am aware that making willfully false statements in my declaration are punishable by fine or imprisonment, or both (under 18 U.S.C. §1001), and thus such actions may compromise the validity of the IPR Petition. All statements herein made by me of my own knowledge are true, and all statements made on information and belief are believed to be true.

321. I declare under penalty of perjury that the foregoing is true and correct. Executed this 27th day of December, 2023 in Berkeley, California.

Eric Welch

Microchip Ex. 1013, p. 188
Microchip v. Aptiv
IPR2024-00228

Aptiv Exhibit 2011 Page 188
Microchip v. Aptiv IPR2024-00229

DocuSign Envelope ID: 21006CD8-3A89-44EF-9ECF-DF7EDF8B0033

APPENDIX A

DocuSign Envelope ID: 21006CD8-3A89-44EF-9ECF-DF7EDF8B0033

Eric Welch

Curriculum Vitae

May 2023

I have over 49 years experience in Systems, Electrical and Software Engineering, Engineering Management and Expert Witness.

Expert Experience

- 2022-2023 Served as testifying expert in patent infringement case involving consumer electronics devices

- 2021 Served as consulting Expert for two co-defendants in a patent infringement case involving Smart Phones and Bluetooth sensors

- 2020-2021 Served as testifying Expert Witness in Arbitration for a contract dispute involving engineering services. Gave deposition and testified at Arbitration hearing.

- 2020-2021 Served as testifying Expert Witness for patent owner in an infringement action and IPR involving USB Memory sticks.

- 2020 - Served as testifying Expert Witness for plaintiff in Microsoft v Dareltech, an IPR case involving "selfie sticks". PTAB found for plaintiff.

- 2018-2020 - Served as testifying Expert Witness for plaintiff in SIMO Holdings v Ucloudlink a Patent Infringement case involving Mobile Cellular devices (phones and WiFi Hotspots). Gave Deposition. Court ruled for plaintiff.

- 2019 - Served as testifying Expert Witness for plaintiff in SZ DJI Technology v Dareltech, an IPR case involving "selfie sticks". Case settled after PTAB institution but prior to completion of IPR process.

- 2018 - Served as consulting Expert for plaintiff in Toshiba and MSI v Walletex Microelectronics, an IPR case involving USB 'C' technology.

- 2017-2018 - Served as testifying Expert Witness for plaintiff in American Security Products Co. v. AT Systems, Inc., an IPR involving smart electronic safes. Found prior art, wrote expert declaration. Case settled just days before filing deadline.

- 2017 - Served as consulting Expert for LG Electronics on Fundamental Innovation Sys v LG Electronics, a case involving USB charging technology. Worked on Claims Construction in support both of an IPR action and for the non-infringement case.

- 2017 — Served as consulting Expert for defendants on Pathway Innovations & Technologies, Inc vs Lumens Integration, Inc, et al., an infringement case involving USB web cameras.

Microchip Ex. 1013, p. 190
Microchip v. Aptiv
IPR2024-00228

Aptiv Exhibit 2011 Page 190
Microchip v. Aptiv IPR2024-00229

Task was to perform tests and engineering analysis on various subject and prior-art devices to determine their USB behavior in support of non-infringement case.

- 2016-2017. served as testifying Expert Witness in VIA Technologies vs. Asmedia Inc., a case involving alleged misappropriation of semiconductor intellectual property. I consulted on numerous aspects of the case and wrote an Expert Report on certain key serial high speed bus testing done by the opposing side. Technology was a high speed USB adapter. I was hired for this case because of my experience with USB and other high speed bus technologies, their testing requirements and for my general engineering experience, both hardware and software, with USB adapters. Gave Deposition. Case settled in August, 2017.

- 2015-2016. Served as testifying Expert Witness retained by plaintiff in Microsoft vs Smart Skins, LLC, an IPR action. Analyzed numerous prior art patents and wrote preliminary and final Expert Reports demonstrating how key claims were anticipated in the pre-existing patents. Read all case documents including all expert reports and deposition transcriptions and helped attorneys finalize their argument. I was hired for this case because of my long experience with Smart Phone accessories, data communication technologies and peripheral interface schemes. Gave deposition on my Expert Report. In July 2017, the USPTO issued a Final Opinion.

- 2012. Served as Expert Witness retained by defendant in Universal Electronics vs Logitech. This case was patent infringement litigation involving programmable TV Remote Controls. In this project I analyzed several dozen patents, from both sides and considered their relative strengths and weaknesses. I also developed a detailed history of the programmable TV Remote and identified key patent and non-patent prior art. Case settled out of court.

- 1980. Served as Expert Witness in a contract dispute involving software intellectual property and the residual knowledge of a Software Programmer. Gave deposition.

Engineering Experience

2008 - Present. President, Bramson Welch & Assoc., Inc.

Bramson Welch is an Engineering Services consultancy specializing in embedded systems, USB, RF (BLE, WiFi, LTE), NFC, IR, Data Communications, mobile devices, iPhone accessories and litigation services including data analysis and Expert Witness. I serve as System Architect and Project Strategist on all BWA projects. I frequently work with multiple client groups to coordinate the design and architecture across many different technical and organizational domains.

Representative Projects:

1. Invented a scheme for thread-safe memory and buffer pool management without the use of synchronization locks or disabled interrupts
2. Led team to create a hand-held Bluetooth Low Energy, battery powered medical device with multiple sensors for use in hospital and clinical settings.

Microchip Ex. 1013, p. 191
Microchip v. Aptiv
IPR2024-00228

Aptiv Exhibit 2011 Page 191
Microchip v. Aptiv IPR2024-00229

3. Invented a scheme for high-speed bus communication and process coordination between standard microcontrollers with mitigation for matching different data rates
4. Designed and developed several novel portable wireless, battery powered, data capture devices for medical research. This included a Bluetooth Low Energy radio, NFC, microcontroller, Analog Front End and Smart Phone and PC support software.
5. Designed and developed a non-iBeacon Bluetooth Low Energy locating device.
6. Developed scheme for a custom USB device to deliver its own host software installer by temporarily emulating a Flash Drive. Device automatically senses if its software is already running bypasses flash drive if so.
7. Developed a scheme of running multiple firmware images on a Cortex-Mx processor to support field firmware update
8. Lead a multiple-team development for a cross-platform consumer medical informatics software product.
9. Designed and developed a general purpose, network connected, manufacturing fixture controller for a major consumer electronics manufacturer.
10. Lead a team development of a Bluetooth iPhone accessory that connects survey grade GPS radios to iPhone and Android smartphones.
11. Implemented a wireless, handheld game controller with NFC and a high resolution touch screen (for Video playback) that ran an embedded game programming language.
12. Designed and developed a specialized USB communication subsystem for a line of consumer medical devices.
13. Designed, evaluated, implemented, and certified numerous iPhone accessories
14. Developed a high-end music player and speaker-phone iPhone accessory
15. Developed software to help a major semiconductor company demonstrate a new face recognition image processing chip.
16. Designed and developed a custom, gesture recognition Human Interface USB peripheral that ran a custom embedded scripting programming language within a micro-VM
17. Advised clients and did development of RF designs, including antenna design, power management, range issues, and certification including 2.4 GHz RF Modems, WiFi, Bluetooth, Bluetooth Low Energy, Zig-Bee, etc.

1995 - 2007. VP Engineering & CTO, Keyspan, a division of InnoSys Incorporated

The Keyspan division of InnoSys develops and markets to the retail channel several lines of computer peripheral and communications devices such as USB adapters, computer remote control devices, USB and FireWire add on cards and related technology

Personally designed and developed core technology for the Keyspan business. Helped increase sales from less than $1MM in 1997 to $13MM in 1999.

Representative Projects:

1. For Microsoft, developed an iPhone adapter cable for the MS Sync Media Player Device.

Microchip Ex. 1013, p. 192
Microchip v. Aptiv
IPR2024-00228

Aptiv Exhibit 2011 Page 192
Microchip v. Aptiv IPR2024-00229

2. A Network-attached USB Host Controller that allows USB devices to be shared over a network
3. A wireless LCD remote control for the iPod with an RF Doc.
4. Best-in-industry line of USB/Serial adapters
5. Several IR and RF Remote control products for controlling a PC or Mac

1976 - 2007 VP Engineering & CTO InnoSys Incorporated

- Co-founded InnoSys in 1976 and member of senior management team and board of directors
- Served as chief architect and designer for firm
- Managed Engineering Department with staff of ten including hardware, firmware, software and QA
- InnoSys is a computer hardware and software technology development and marketing company. The Airline Gateway division develops and markets a line of specialized communication gateway products that create telecommunication infrastructure for such systems as WEB based travel booking systems.

Representative Projects:

1. Managed a $2MM project to design, develop and deploy a sophisticated store and forward message switch for a major airline reservation system. The system is still in use after 20 years.
2. Developed several PCI serial communication plug-in computer accessory boards, along with associated firmware and host device driver software.
3. Designed and developed a high performance scheduler and operating system for a line of embedded system protocol converters. The converters were used by Amtrak's ticket kiosks, by various airlines to pass flight plans, for inter-line traffic, etc.
4. Consulted with a high technology consumer electronics company in the design of an early (1980s) hand-held general purpose computer.
5. Developed a multi-line high-fidelity digital sound delivery system for an automated phone response system

Publications

Designing a short-range RF link into a consumer-electronics product, EDN Magazine 7/8/2008

http://www.edn.com/article/472244-Designing_a_short_range_RF_link_into_a_consumer_electronics_product.php

Videotex: A Potent Weapon In Struggle with Nonbanks. ABA Banking Journal, Feb 1983

Microchip Ex. 1013, p. 193
Microchip v. Aptiv
IPR2024-00228

Aptiv Exhibit 2011 Page 193
Microchip v. Aptiv IPR2024-00229

DocuSign Envelope ID: 21006CD8-3A89-44EF-9ECF-DF7EDF8B0033

Patent Pending

"Small Footprint Reference-Counting Buffer Pool Management Without Synchronization Locks" (Filed 2022)

Provisional

"Electronic Digital Stethoscope and Uses Thereof" (Filed 2023)

Patents Filed (these were shipping products)

"METHOD AND APPARATUS FOR HOST CONTROLLER OPERATIONS OVER A NETWORK" (filed 2003)

"APPARATUS AND METHOD FOR TWO-WAY
REMOTE CONTROL AND CRADLE OR ADAPTOR
TO CONTROL AN A/V MEDIA PLAYER" (filed 2006)

Memberships

IEEE - Senior Member
Microsoft Developer Network (MSDN)
Apple Developer Program (iOS and MacOS)
Apple Made for iPhone (MFi) Developer program

Education

BA, Mathematics (with three years each Computer Science and Physics). UC Berkeley, 1977

Microchip Ex. 1013, p. 194
Microchip v. Aptiv
IPR2024-00228

Aptiv Exhibit 2011 Page 194
Microchip v. Aptiv IPR2024-00229