United States Patent [19]

Fletcher et al.

[11] **3,916,380**

[45] **Oct. 28, 1975**

[54] **MULTI-COMPUTER MULTIPLE DATA PATH HARDWARE EXCHANGE SYSTEM**

[76] Inventors: **James C. Fletcher**, Administrator of the National Aeronautics and Space Administration, with respect to an invention of **Tage O. Anderson**, Arcadia, Calif.

[22] Filed: **Nov. 6, 1974**

[21] Appl. No.: **521,601**

[52] **U.S. Cl.** ..... **340/147 R**; 340/147 C

[51] **Int. Cl.**[2] **H04Q 11/00**

[58] **Field of Search** ..... 340/147 R, 147 LP, 152, 340/163, 147 CN, 147 C, 172.5

[56] **References Cited**

UNITED STATES PATENTS

3,366,849 1/1968 De Raedt ..... 340/147 LP

Primary Examiner—Harold J. Pitts

Attorney, Agent, or Firm—Monte F. Mott; John R. Manning; Paul F. McCaul

[57] **ABSTRACT**

A switch controller in a multi-computer processing system functions to establish a data path between any two computers in the system and maintain that data path, without interference, while establishing other independent unidirectional data paths with other pairs of computers. All computers in the system are continuously and rapidly scanned for a request-to-send signal. Those computers that are already engaged in data transmission are leap-frogged by the scanning mechanism. When a request-to-send signal is detected by a particular scanning mechanism, that scanning mechanism stops at the computer generating the request, to provide for an interconnection between the requesting sender and the intended receiver. If during this interconnection phase, it is determined that the intended receiver is occupied, the interconnection is prevented from being completed and the scanning mechanism is instructed to resume scanning of the computers for another request-to-send signal.

30 Claims, 13 Drawing Figures

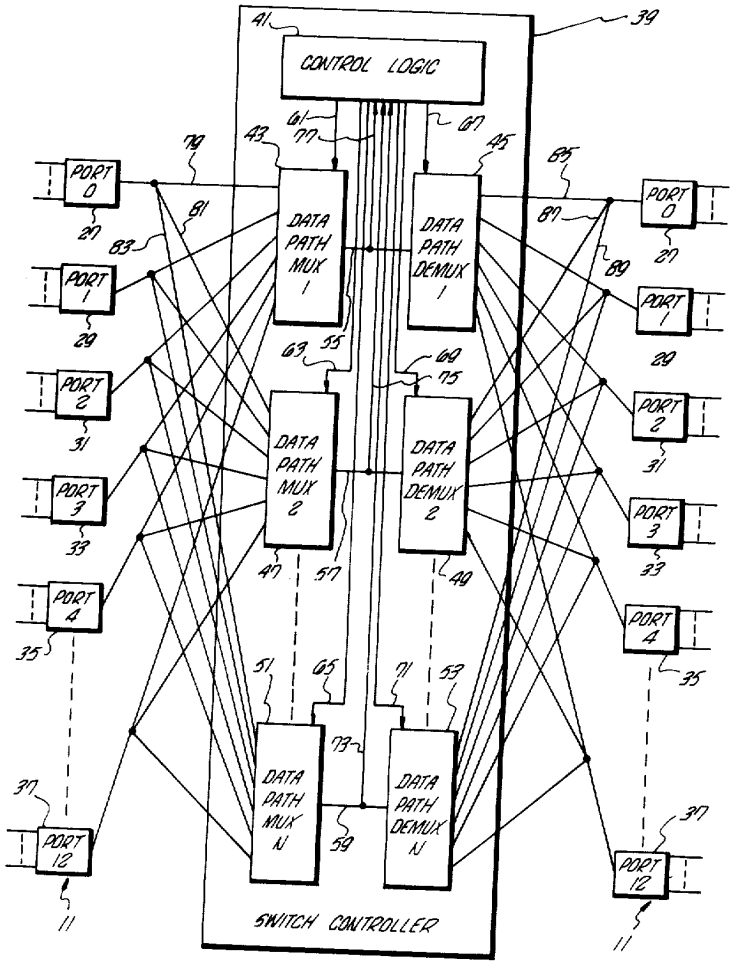

Microchip Ex. 1040, p. 1
Microchip v. Aptiv
IPR2024-00230

PRIOR ART

FIG. 1

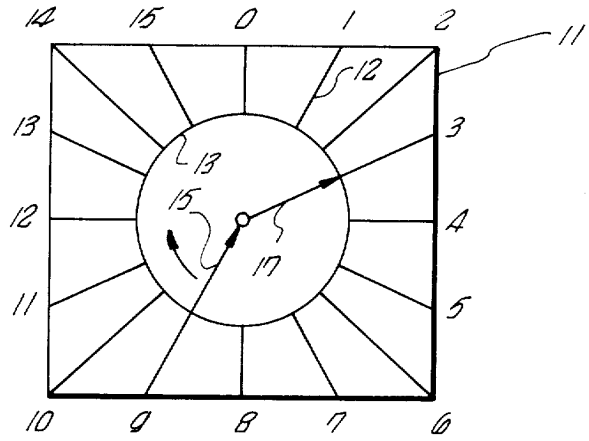

FIG. 2

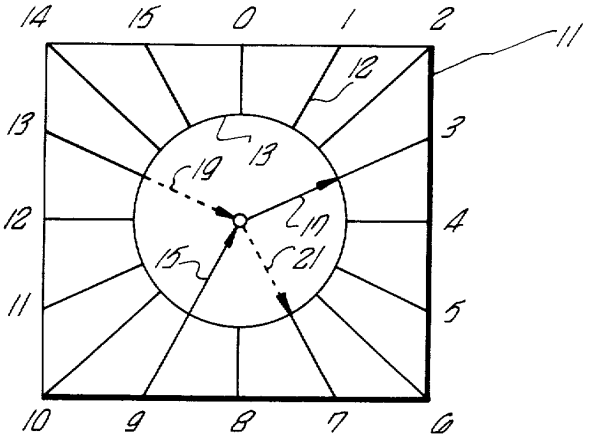

FIG. 3

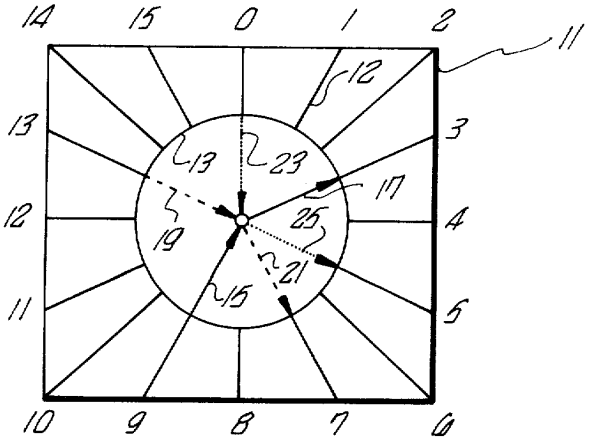

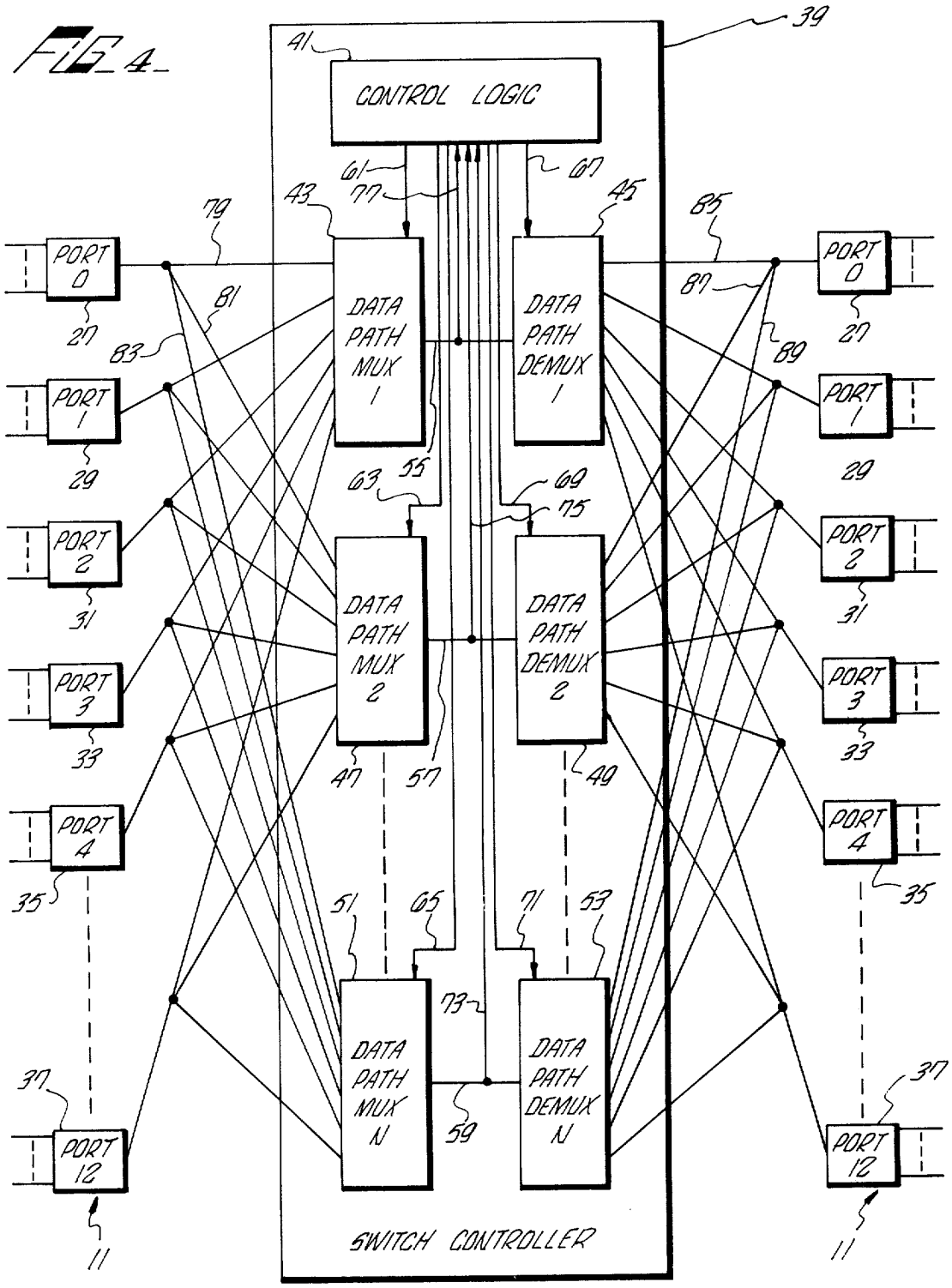
FIG. 4
CONTROL LOGIC
DATA PATH MUX 1
DATA PATH DEMUX 1
DATA PATH MUX 2
DATA PATH DEMUX 2
DATA PATH MUX N
DATA PATH DEMUX N
PORT 0
PORT 1
PORT 2
PORT 3
PORT 4
PORT 12
SWITCH CONTROLLER
39
41
43
45
47
49
51
53
55
57
59
61
63
65
67
69
71
73
75
77
79
81
83
85
87
89
27
29
31
33
35
37
11

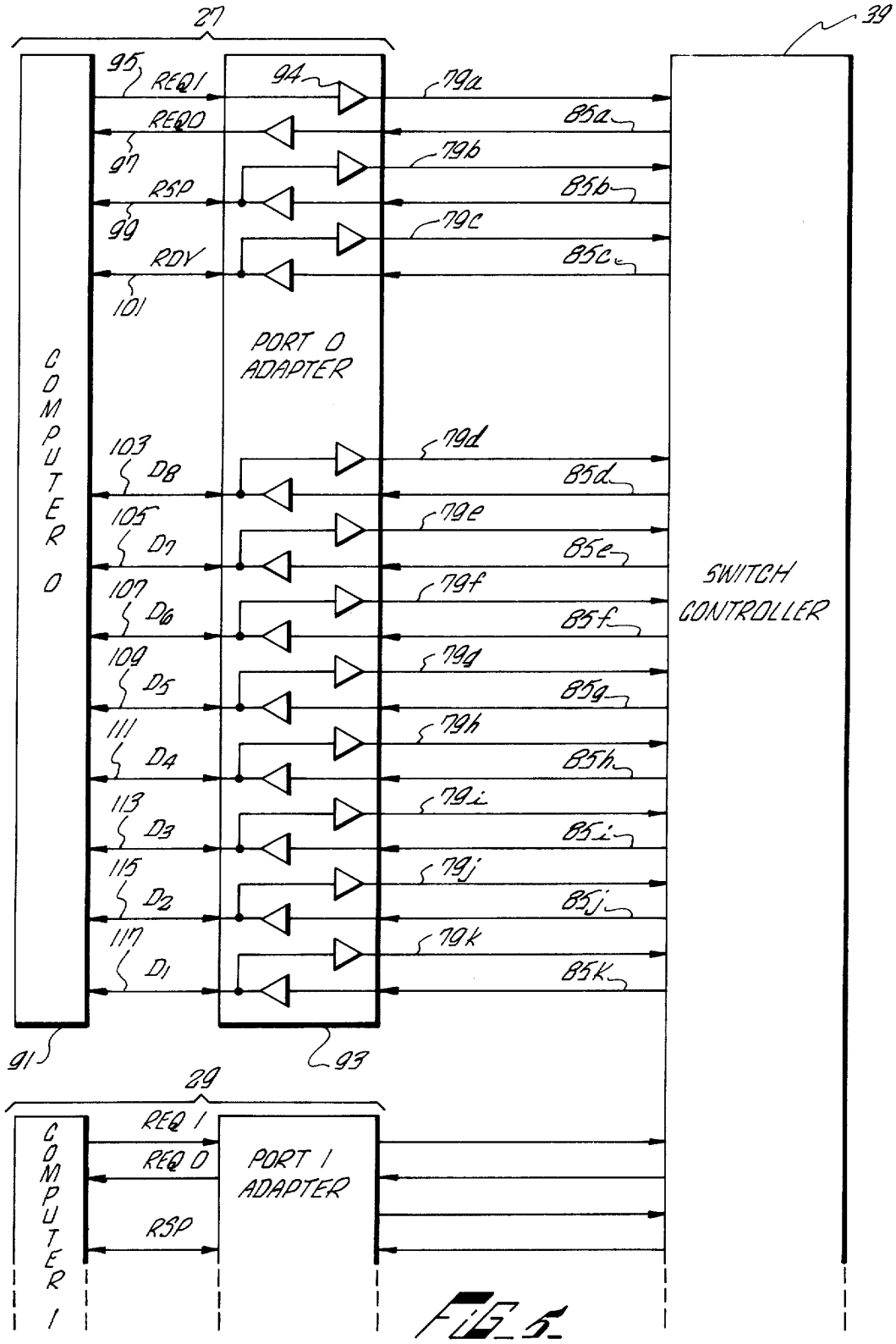
27
39
95
REQ1
94
79a
REQ0
85a
97
79b
RSP
85b
99
79c
RDY
85c
101
COMPUTER 0
PORT 0 ADAPTER
103
DB
79d
85d
105
D7
79e
85e
107
D6
79f
85f
109
D5
79g
85g
111
D4
79h
85h
113
D3
79i
85i
115
D2
79j
85j
117
D1
79k
85k
SWITCH CONTROLLER
91
93
29
REQ 1
REQ 0
RSP
COMPUTER 1
PORT 1 ADAPTER

FIG. 5

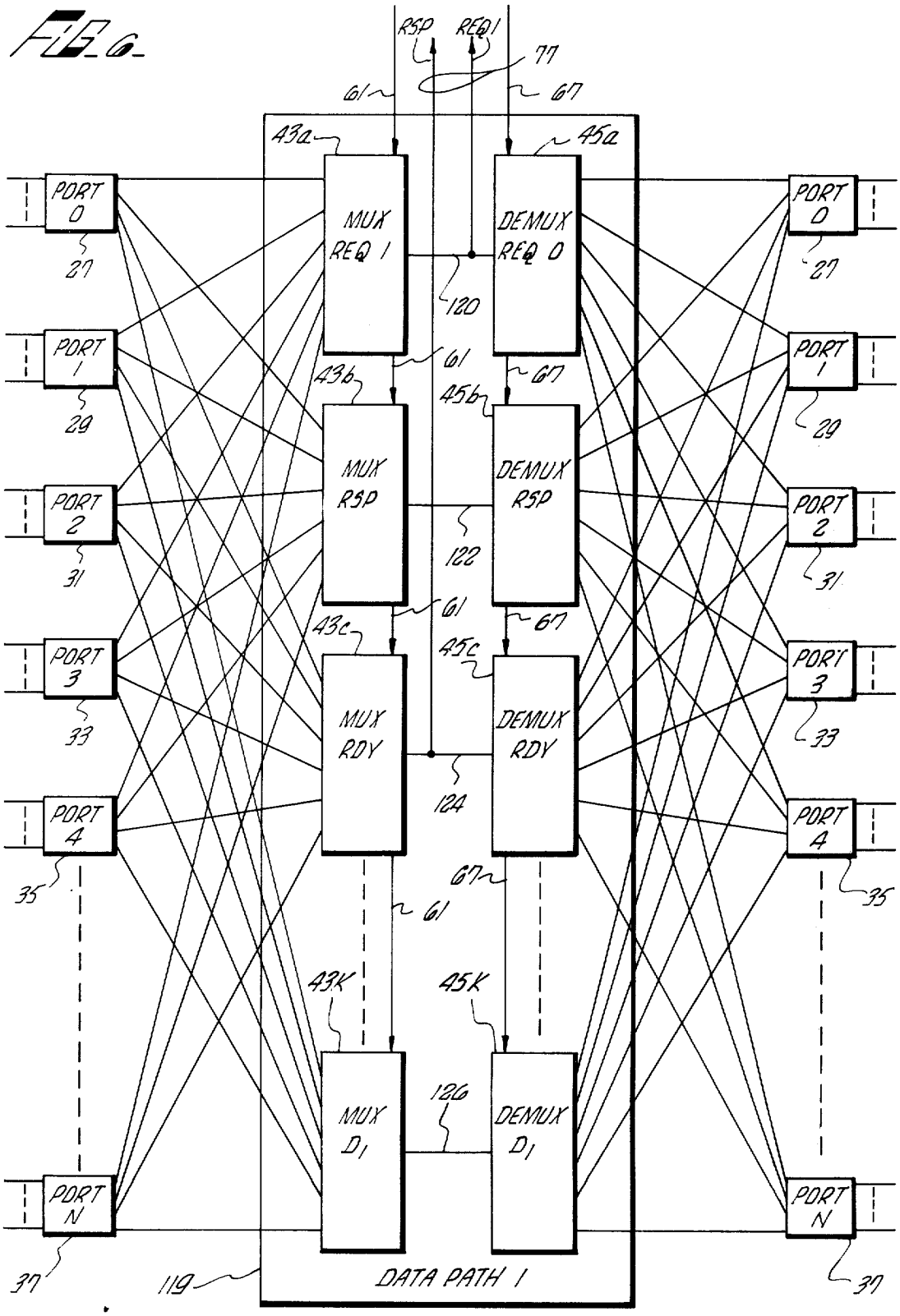
FIG. 6
RSP
REQ1
77
61
67
43a
45a
PORT 0
MUX REQ 1
DEMUX REQ 0
27
120
PORT 1
29
43b
45b
MUX RSP
DEMUX RSP
PORT 2
31
122
43c
45c
MUX RDY
DEMUX RDY
PORT 3
33
124
PORT 4
35
43K
45K
MUX D1
DEMUX D1
126
PORT N
37
119
DATA PATH 1

FIG. 7

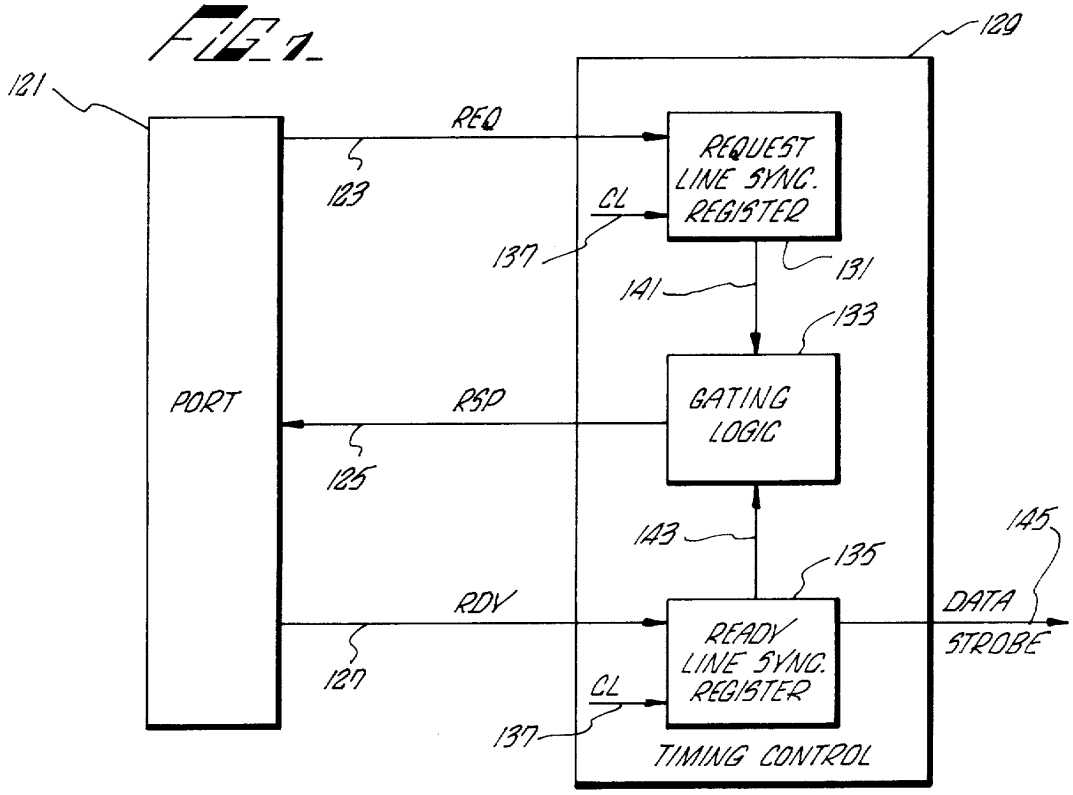
129
121
REQ
123
REQUEST LINE SYNC. REGISTER
CL
137
131
141
133
PORT
RSP
GATING LOGIC
125
143
135
145
RDY
DATA STROBE
READY LINE SYNC. REGISTER
127
CL
137
TIMING CONTROL

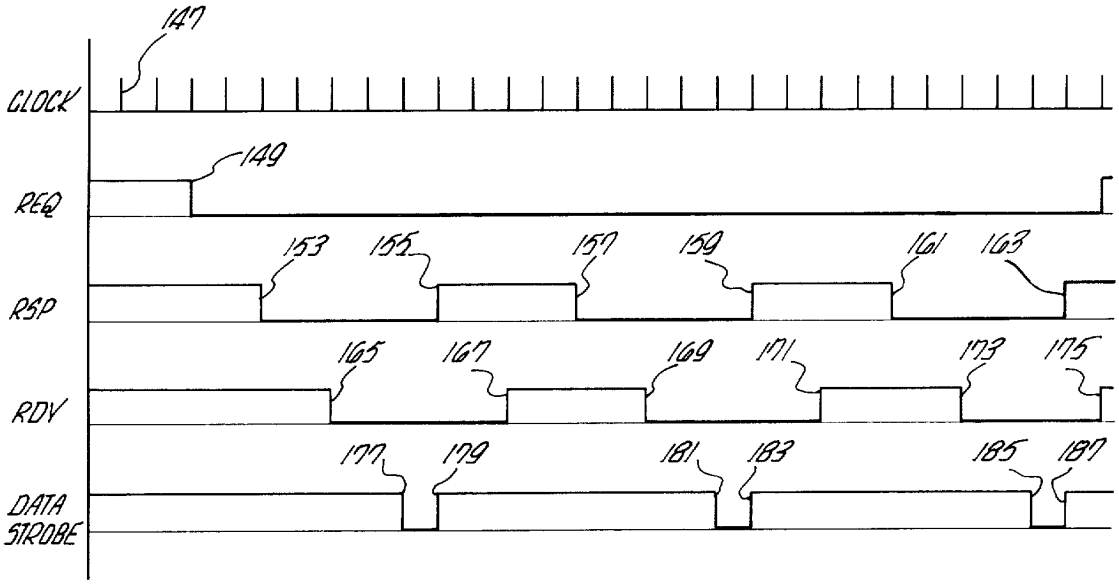
147
CLOCK
149
REQ
153
155
157
159
161
163
RSP
165
167
169
171
173
175
RDY
177
179
181
183
185
187
DATA STROBE

FIG. 8

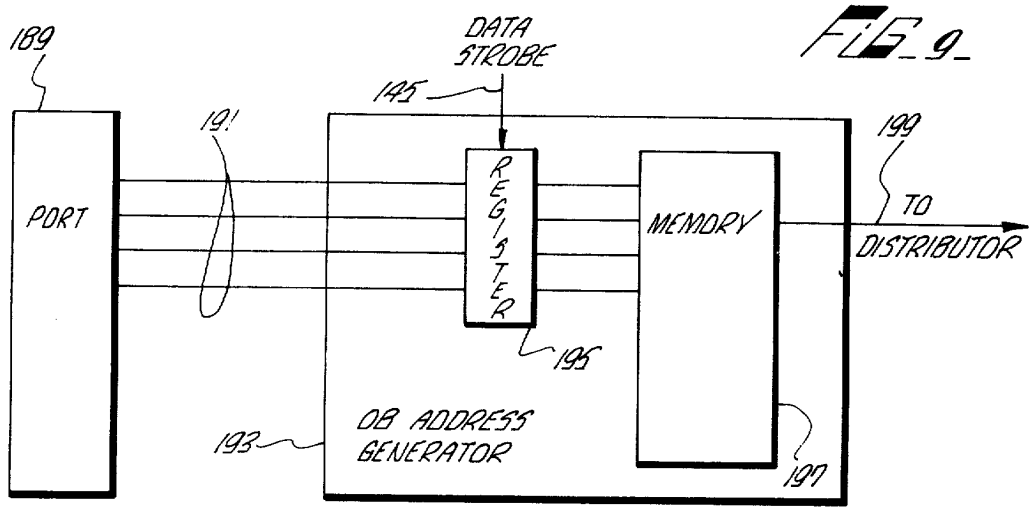
FIG. 9
DATA STROBE
189
145
191
199
PORT
REGISTER
MEMORY
TO DISTRIBUTOR
195
193
OB ADDRESS GENERATOR
197

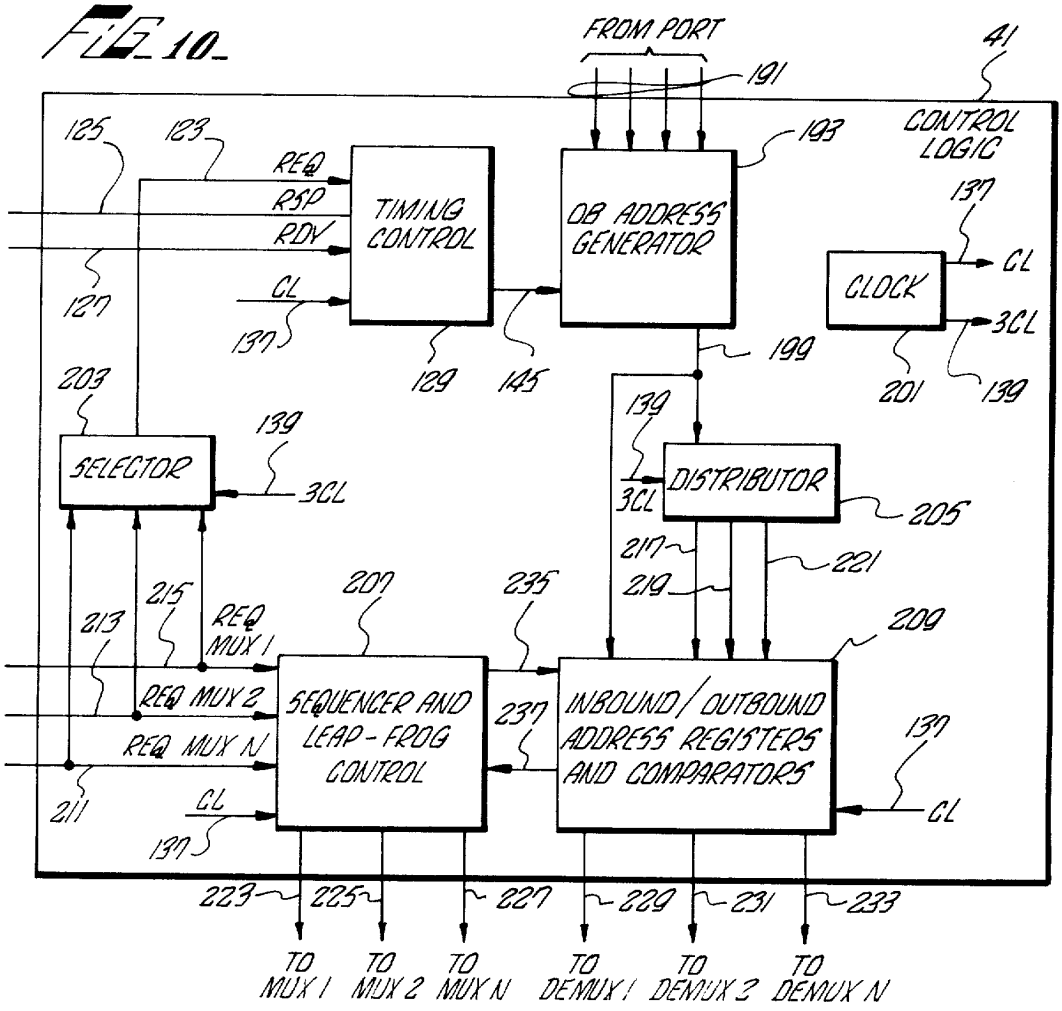
FIG. 10
FROM PORT
191
41
CONTROL LOGIC
125
123
REQ
RSP
RDY
TIMING CONTROL
193
OB ADDRESS GENERATOR
137
CL
CLOCK
3CL
127
129
145
199
201
139
203
SELECTOR
DISTRIBUTOR
205
217
221
219
215
213
REQ MUX 1
207
235
209
REQ MUX 2
REQ MUX N
SEQUENCER AND LEAP-FROG CONTROL
237
INBOUND/OUTBOUND ADDRESS REGISTERS AND COMPARATORS
211
223
225
227
229
231
233
TO MUX 1
TO MUX 2
TO MUX N
TO DEMUX 1
TO DEMUX 2
TO DEMUX N

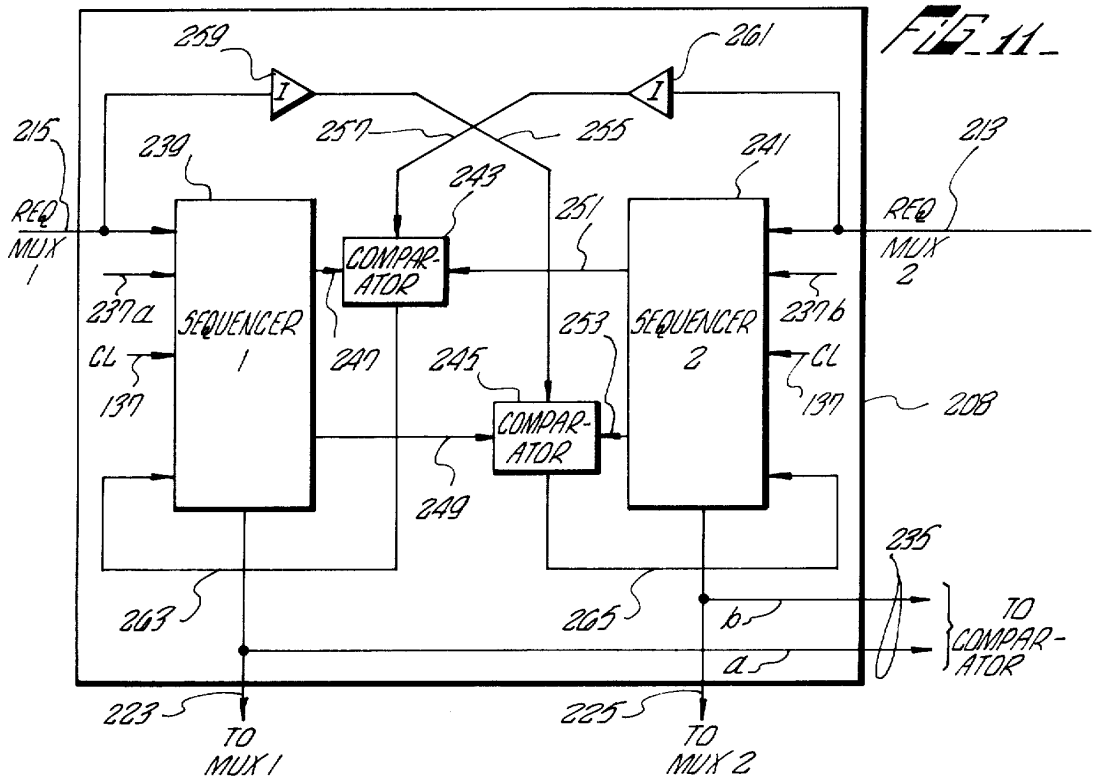
259
261
I
I
215
239
257
255
241
213
243
251
REQ
MUX
1
COMPAR-
ATOR
REQ
MUX
2
237a
SEQUENCER
1
247
253
SEQUENCER
2
237b
CL
137
245
CL
137
208
COMPAR-
ATOR
249
235
263
265
b
a
TO
COMPAR-
ATOR
223
225
TO
MUX 1
TO
MUX 2

FIG. 11

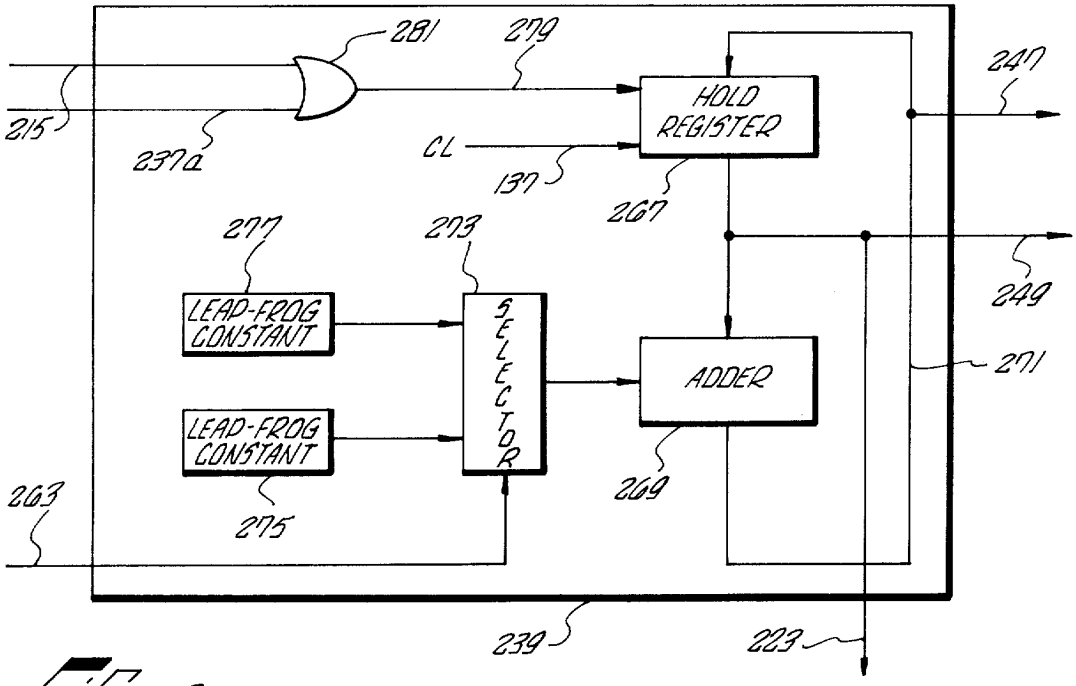
281
279
247
215
237a
HOLD
REGISTER
CL
137
267
277
273
249
LEAD-FROG
CONSTANT
SELECTOR
ADDER
271
LEAD-FROG
CONSTANT
269
263
275
239
223

FIG. 12

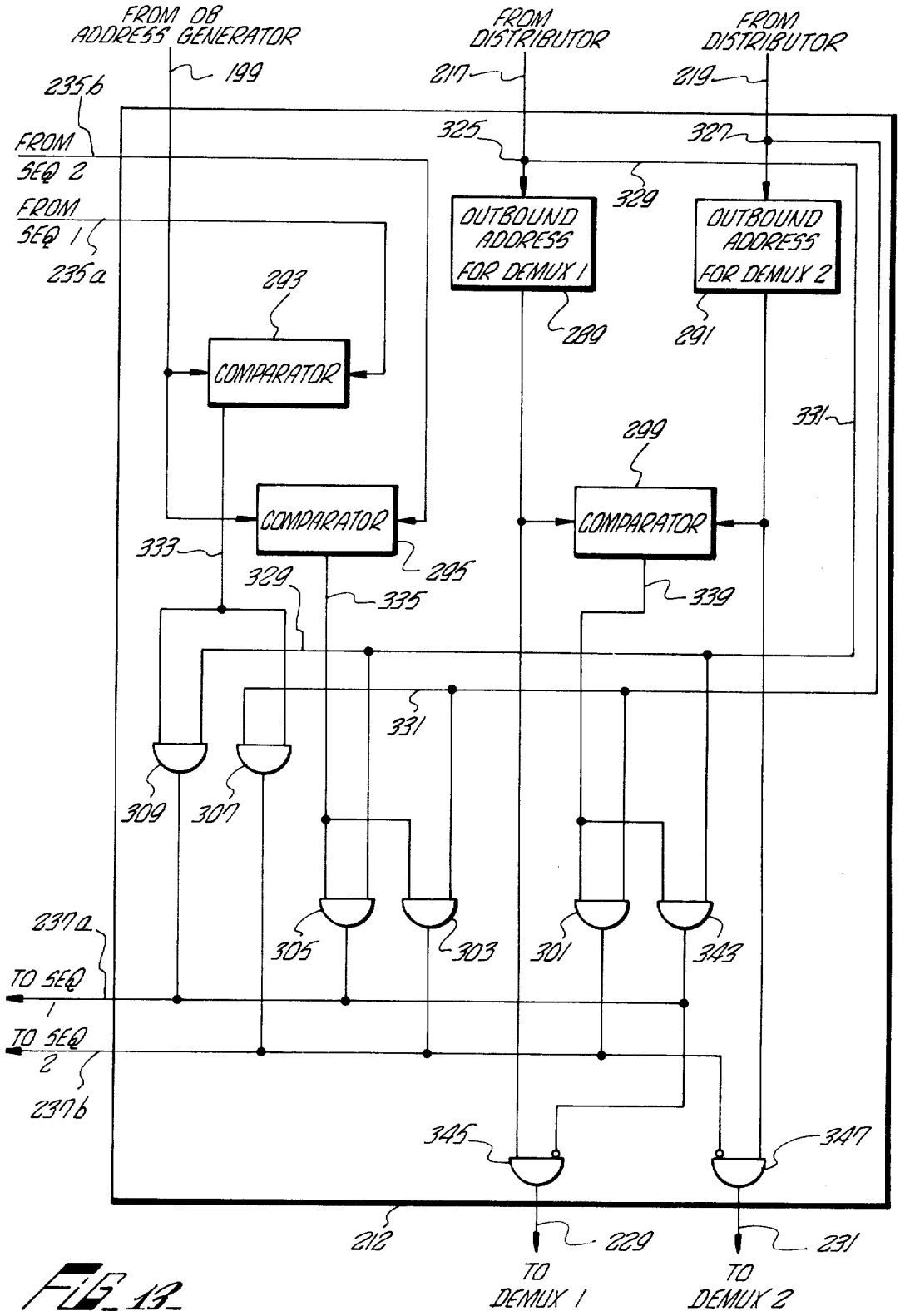
FROM OB ADDRESS GENERATOR
199
FROM DISTRIBUTOR
217
FROM DISTRIBUTOR
219
235b
FROM SEQ 2
FROM SEQ 1
235a
325
327
329
OUTBOUND ADDRESS FOR DEMUX 1
OUTBOUND ADDRESS FOR DEMUX 2
289
291
293
COMPARATOR
331
299
COMPARATOR
COMPARATOR
333
295
329
335
339
331
309
307
305
303
301
343
237a
TO SEQ 1
TO SEQ 2
237b
345
347
212
229
231
TO DEMUX 1
TO DEMUX 2

FIG. 13

MULTI-COMPUTER MULTIPLE DATA PATH HARDWARE EXCHANGE SYSTEM

BACKGROUND OF THE INVENTION

ORIGIN OF THE INVENTION

The invention described herein was made in the performance of work under NASA contract and is subject to the provisions of Section 305 of the National Aeronautics and Space Act of 1958, Public Law 85-568 (72 STAT. 435; 43 U.S.C. 2457).

FIELD OF THE INVENTION

The present invention relates generally to improvements in switching exchanges for multi-computer processor systems, and more particularly pertains to new and improved multiple data path switching exchanges for multi-computer processor systems.

DESCRIPTION OF THE PRIOR ART

Prior art consideration of the problem of simultaneously interconnecting a plurality of computer pairs, instead of just a single pair, has resulted in a variety of different solutions. One solution presented provides for a physical link between each pair of computers which had a need to communicate. This interconnection scheme would entail N (N−1)/2 links for N computers. This solution is expensive in hardware, but provides for maximum flexibility. In this arrangement messages directed from one computer to another are routed by addressing the physical link interface hardware attached to the source computer.

Another prior art solution to the same problem involves removing some of the N (N−1)/2 links, leaving only those links that connect each computer to only a small number of its neighbors. By providing message routing information within the message unit utilized in this type of system, functional data paths exist between computers which are not physically directly connected. This type of arrangement is sometimes called a single channel ring communication system. An example of a variation of this ring system is the IBM Technical Disclosure Bulletin Volume 15, No. 1, published June, 1972.

Yet another prior art solution to the above problem is to utilize what is sometimes called a star interconnection configuration. This type of configuration entails the use of a switching mechanism centrally located between the intercommunicating computers with each of the computers linked to this switching unit by respective data paths. FIG. 1 represents a typical star configuration in abstract form. A plurality of computers, **0–15**, situated around a perifery **11** are connected to a central switching mechanism **13** by their respective data paths, such as data path **12**, for example. The switching mechanism **13** consists, basically, of a scanning mechanism **15** that rapidly scans, in a single direction, all the inbound data paths of the various computers **0–15**. Responsive to destination address information received from one of these computers by way of scanning mechanism **15**, a distribution mechanism **17** is directed to move to the outbound data line of the intended receiving computer or device. As illustrated in FIG. 1, distribution mechanism **17** instantaneously connects to an input port upon command, while scanning mechanism **15** moves in a clockwise direction.

OBJECTS AND SUMMARY OF THE INVENTION

It is an object of this invention to provide an exchange system for interconnecting computer pairs in a multi-computer system, in order to establish multiple, simultaneous, independent and unidirectional data paths therebetween.

Another object of this invention is to provide for scanning, by a plurality of scanning devices, of computers in a multi-computer system for a request-to-send signal, without interferring with each other.

A further object of this invention is to provide scanning mechanisms for scanning a plurality of computers for request-to-send signals that will leap-frog over quiescent scanning mechanisms that have established or that are in the process of establishing a data path between a pair of computers.

Yet another object of this invention is to provide a mechanism for detecting when an intended data receiving computer is occupied, and in such case instructing the scanning mechanism connected to the requesting sender to resume scanning.

Still a further object of this invention is to provide a sequencing mechanism, for driving a scanning mechanism, which sequencing mechanism generates an address sequence that is dictated by the particular leap-frog constant chosen.

These objects and the general purpose of this invention are accomplished by providing a sequencer and data path switching logic for each independent, unidirectional data path between a plurality of computers in a multi-computer system. Each sequencer steps its respective data path switching logic to scan the computers in a multi-computer system for a request-to-send signal. During the scanning cycle, the switching logic for each unoccupied data path is stepped along sequentially until a busy computer, as evidenced by quiescent switching logic located there, is reached. At this time the scanning switching logic leaps over the quiescent switching logic and continues its scanning sequence. Upon detecting a request-to-send signal eminating from one of the computers being scanned by its switching logic, the sequencer instructs its switching logic to stop scanning (become quiescent). A destination address triggered by a requesting sender directs the switching logic to connect to a certain receiving computer. If the intended receiving computer is found to be busy, the data path cannot be completed.

The sequencer used for each independent data path utilizes a register and full adder connected in a loop. The adder combines the output of the register with a dynamically selected leap-frog constant which sum is then supplied to the register. The leap-frog constant for a particular sequencer, at a particular time, is chosen by comparing the next inbound address of the particular scanning sequencer with the present inbound addresses of all the quiescent sequencers.

The outbound address received from the requesting computer identifies the intended receiving device. This outbound address is compared with inbound addresses and outbound addresses that identify existing data path connections. If a match occurs in any such comparison, the sequencer connected to the requesting computer is directed to resume scanning and the received outbound address is abandoned.

BRIEF DESCRIPTION OF THE DRAWINGS

Other objects and many of the attendant advantages of this invention will be readily appreciated as the same becomes better understood by reference to the following detailed description when considered in conjunction with the accompanying drawings in which like reference numerals designate like parts throughout the figures thereof and wherein:

FIG. 1 is an abstract illustration of a hardware exchange system envisioned by the prior art.

FIG. 2 is an abstract illustration of a two simultaneous data path exchange system contemplated by the present invention.

FIG. 3 is an abstract illustration of a three simultaneous data path exchange system contemplated by the present invention.

FIG. 4 is a block diagram illustration of a multiple simultaneous data path exchange system for a plurality of computers.

FIG. 5 is a logic and block diagram illustration of the data lines in a data path that interconnect a single computer port with the exchange switch controller of the present invention.

FIG. 6 illustrates in block diagram form the switching mechanism utilized in the switch controller of FIG. 4 for a single data path.

FIG. 7 is a block diagram illustration of the timing control found in the control logic of the switch controller.

FIG. 8 is a pulse diagram illustrating the function of the timing control of FIG. 7.

FIG. 9 is a block diagram illustration of the outbound address generator utilized in the control logic of the switch controller.

FIG. 10 is a block diagram illustration of the interaction of all the elements in the control logic utilized in a switch controller.

FIG. 11 is a block diagram illustration of a sequencer and leap-frog control mechanism for controlling the simultaneous operation of two independent data path switching mechanisms.

FIG. 12 is a block diagram and logic circuit illustration of a sequencer mechanism used in the sequencer and leap-frog control mechanisms of FIG. 11.

FIG. 13 is a block diagram and logic circuit illustration of an inbound/outbound address comparator mechanism utilized in the control logic of FIG. 10.

DESCRIPTION OF THE PREFERRED EMBODIMENTS

Referring first to FIGS. 2 and 3, which abstractly illustrate the function of the multiple independent data path exchange of the present invention, a plurality of computers 0–15 are seen as located at a perifery 11 and connected to a centrally located switch controller 13 by way of data paths 12. FIG. 2 shows a two path hardware exchange system wherein the scanning mechanism 15 functions in conjunction with a distributing mechanism 17 to establish a first data path that is independent from a second data path consisting of a scanning mechanism 19 functioning in conjunction with a distributing mechanism 21. FIG. 3 illustrates a three independent data path exchange system wherein an additional scanning mechanism 23 is functioning in conjunction with an additional distributing mechanism 25. The scanning mechanisms 15, 19 and 23 scans the inbound ports of the computers 0–15, in a single direction, until a request-to-send signal is received. At such time, the scanning mechanism sensing that request-to-send signal stops scanning and receives from that particular computer mechanism a code that identifies the intended receiving device. This code is utilized to direct the respective distributing mechanism to the port of that intended receiving device. During the time that this is occurring, in other words, that a data path is being established, other scanning mechanisms are momentarily halted. The scanning process by these other mechanisms will then not interfere with the data path being established. Exactly how active scanning mechanisms leap-frog quiescent scanning mechanisms will be explained hereinafter.

The basic hardware and Multiple Simultaneous Data Path Exchange System and functions of the switch controller 39, that is the heart of the multiple path exchange system of this invention, and its interconnection with the plurality of computer or device ports 27–37 located on a perifery around the switch controller 39, will first be explained in connection with FIG. 4. Each of the boxes labeled port, such as "Port 0" box 27, for example, represents a computer or device capable of generating request-to-send signals and having the ability to transmit data. Thus, 0 port 27, 1 port 29, 2 port 31, 3 port 33, 4 port 35 and N port 37 all located on perifery 11 around the switch controller 39, illustrate devices that can communicate with each other through the switch controller 39. It should be remembered that the ports on the left hand side of the figure are the same ports as those on the right hand side of the figure.

The lines are half-duplex lines, i.e. bidirectional, however active in only one direction at a time. Thus, line 79 from 0 port 27, on the left, to the switch controller 39 is an inbound data line and line 85 from 0 port 27, on the right, to switch controller 39 is an outbound data line.

The switch controller 39 basically comprises an electronic crossbar switch implemented by a plurality of data path multiplexer and demultiplexer pairs. The number of such pairs equal the number of independent data paths. Thus, number 1 data path multiplexer 43 and number 1 data path demultiplexer 45 make up a first data path. Number 2 data path multiplexer 47 and number 2 data path demultiplexer 49 make up a second independent data path. Number N data path multiplexer 51 and number N data path demultiplexer 53 represents any number of further independent data paths, as desired.

The number of data path multiplexer-demultiplexer pairs in the switch controller 39 will determine the number of independent inbound and outbound data paths interconnecting an equal number of sets of two computers through the switch controller. For example, 0 port 27 has three inbound data paths 79, 81 and 83, and three outbound data paths 85, 87 and 89 going to the switch controller 39. All the other port devices are likewise interconnected. That is, for each device, each one of the inbound data paths go to its respective data path multiplexer in the switch controller and each one of the outbound data paths come from its respective demultiplexer in the switch controller 39.

The multiplexer and demultiplexer pairs which comprise the hardware data paths through the switch controller 39 are directed by control logic 41 which generate addresses or switching instructions for the multi-

plexers and demultiplexers. Number 1 data path multiplexer 43 receives sequential switching addresses from control logic 41 over cable 61. Number 2 data path multiplexer 47 receives switching addresses over cable 63. Number N data path multiplexer 51 receives switching addresses from control logic 41 over cable 65. These multiplexers are the scanning mechanisms represented by the inward pointing arrows of FIGS. 2 and 3. Number 1 demultiplexer 45 receives addresses over cable 67 from control logic 41. Number 2 demultiplexer 49 receives switching addresses over cable 69 and Number N demultiplexer 53 receives switching addresses from control logic 41 over cable 71. These demultiplexers are the distributing mechanisms represented by the outward pointing arrows in FIGS. 2 and 3.

Each multiplexer-demultiplexer pair is connected together to form a single data path. Multiplexer-demultiplexer pair 43–45 is connected together by data path 55. Multiplexer demultiplexer pair 47–49 is connected together by data path 57 and multiplexer-demultiplexer pair 51–53 is connected together by data path 59. Each of these data paths 55, 57 and 59 are the source of control information, supplied over lines 73, 75 and 77 to the control logic 41. The control logic 41, as will be hereinafter explained, utilizes this information to generate appropriate switching addresses for the multiplexers and demultiplexers of the switch controller 39.

In order to more readily comprehend the interconnection of cables between the switch controller 39 and the various computers, reference should be made to FIG. 5 which illustrates a typical multi-conductor interface cable used to provide an inbound and outbound data path between a single computer device and the switch controller 39. In the example, a computer device 91 interfaces with a port adaptor 93 by way of a plurality of half duplex lines. There are eight data lines 103 to 117 and four control signal lines 95 through 101. These half duplex lines are converted to unidirectional signal paths by port adaptor 93 which shows a plurality of unidirectional line drivers 94 that are well known in the art and will not be discussed herein.

Thus, inbound request line 95 leaves the port adapter 93 as inbound conductor 79*a*. Outbound request line 97 leaves the port adapter as outbound conductor 85*a*. Half-duplex response line 99 leaves the port adapter as inbound conductor 79*b* and outbound conductor 85*b*. Half-duplex response line 101 leaves the port adapter as inbound conductor 79*c* and outbound conductor 85*c*, and so on. As can be seen from FIG. 5, all the conductors numbered 79*a* through 79*k* represent the conductors of the inbound data path cable 79 (FIG. 4), and the conductors numbered 85*a* through 85*k* represent the conductors of the outbound data path cable 85 (FIG. 4).

Referring now to FIG. 6, a single data path switching exchange mechanism 119 is illustrated. This data path switching mechanism is the data path multiplexer-demultiplexer pair 43–45 of FIG. 4. The number 1 multiplexer 143 of FIG. 4 is made up of a plurality of multiplexers 43*a* through 43*k*. The number of multiplexers making up a data path multiplexer equals the number of inbound unidirectional conductors coming from a single computer adapter, in other words, the number of inbound conductors in the data path cable connecting to an input-output computer port. Thus, each half-duplex conductor in a data path connecting a particular computer mechanism and the switch controller 39 (FIG. 4) has a multiplexer-demultiplexer pair.

The inbound request multiplexer 43*a* receives all the inbound request conductors from the computer devices 27 through 37 in the system. Thus, the single conductor 120 interconnecting multiplexer 43*a* and demultiplexer 45*a* carries request-to-send signals from any computer device in the system desiring interconnection with another device. Demultiplexer 45*a* distributes or routes the particular request received to the designated computer or device.

The other multiplexer-demultiplexer pairs of the exchange mechanism 119 are similarly organized. Multiplexer 43*b* receives all outbound response signal conductors from the computer devices 27–37 and connects them to the outbound response distributing demultiplexer 45*b* over conductor 122. Multiplexer 43*c* receives all ready signal conductors from the computer devices 27–37 and connects them to the ready signal distributing demultiplexer 45*c* over conductor 124.

This control signal line organization also follows for the data lines D_8 to D_1, the first data line. Thus, multiplexer 43*k* receives all the inbound conductors carrying data bit D_1 from the computer devices 27–37 and connects them to the D_1 distributing demultiplexer 45*k* over line 126.

The switching action of the multiplexers making up the first data path 119 of the switch exchange controller 39 (FIG. 4) is controlled by its control logic 41 (FIG. 4) over cable 61. The switching action of the demultiplexers 45*a*–45*k* is likewise controlled by control logic 41 (FIG. 4) over cable 67. The connecting conductors between multiplexer-demultiplexer pairs that carry control signals, such as an inbound request on line 120 and an inbound response on line 124, supply information to control logic 41 (FIG. 4) over cable 77. These control signals direct the switching action commands that control logic 41 supplies to the various multiplexer-demultiplexer pairs.

Standard off the shelf integrated circuit chips may be used to construct the exchange of FIG. 6. Multiplexers 43*a* through 43*k* for example, may be made up of well known 16:1 multiplexer chips manufactured by the integrated circuit manufacturers. These particular multiplexer chips have a four bit address input which selects one of the sixteen incoming lines to be connected to the single outgoing line. The demultiplexers 45*a* to 45*k* may be made up of well known 1:16 demultiplexer chips manufactured by the integrated circuit manufacturers. These particular chips are a one line to 16 line demultiplexer. The outgoing line is selected according to a four bit code.

Referring now to FIG. 7, timing control logic 129 that functions to clock data from a particular sending computer, by way its input/output port 121, to a receiving computer, is illustrated. The transmitting computer sends out a request signal over inbound request line 123 to a request line synchronizing register 131 which is a well known left/right shifting register. The request line register 131 insures that no output is produced on line 141 unless the request signal level has been present at the input of the register, on line 123, for at least two clock times. Clocking pulses from a clock source 201 (FIG. 10) are supplied to the request line register over clock input line 137. Request line register 131 found in the prior art, responds to a signal on line 123 by gener-

ating a response signal level on line **125** through simple gating logic **133**. The response signal supplied to the computer over line **125** causes the computer to generate a ready signal which is supplied to the timing control logic **129** over ready signal line **127**. The ready signal is received by ready line synchronizing register **135**. The ready line synchronizing register **135** generates a data strobe pulse on line **145** only after at least two clock pulses have passed since the ready signal was received on line **127**. The ready line synchronizing register **135** is a well known shift register apparatus. The design purpose for the request line synchronizing register **131**, and the ready line synchronizing register **135** not responding at the exact instant input signals are received, is to insure that they will not be triggered into operation by spurious noise signals on the lines **123** and **127** from the computer port **121**.

Referring now to FIG. **8**, the function of the timing control logic **129** (FIG. 7) in performing data strobing is illustrated. The output signal of a common clock source is shown as clock transitions **147**. Upon the signal on the request line **125** going low **149**, the request line synchronizing register **131** will respond thereto by generating a signal on the line **141** to the gating logic **133**. The signal on line **141** is supplied on the second clock after the request line signal went low. The gating logic responds to the signal on line **141** to drop the signal level **153** on the response line **125**. The computer connected to port **121** responds to this transition by causing the ready line to go low **165**, two clock periods thereafter. In response to this transition, the occurrence ready line synchronizing register **135** generates a data strobe pulse **177–179** on line **145**, two clock periods thereafter and triggers gating logic **133** into removing **155** the response signal from line **125**. Removal of the response signal from line **125** causes the computer to remove **167** the ready signal from line **127**. Since the request line **123** still carries a request signal, on the second clock pulse after removal **167** of the ready signal from line **127**, gating logic **133** again supplies a response signal **157** to line **125**. This signal causes the computer to react by sending a ready signal **169** to ready line synchronizing register **135**. This ready signal causes the ready line register **135** to respond by generating a data strobe pulse **181–183** and triggering the gating logic **133** to again remove **159** the response signal from line **125**. This causes the computer to remove **171** the ready signal from line **127**. The removal of the ready signal with the request line **123** still low causes gating logic **133** to again generate a response signal **161**. Occurrence of this signal again causes the computer to react by sending a ready signal **173** whereby ready line synchronizing register **135** responds thereto by generating another data strobe pulse **185–187**. For the example, the end of the last computer generated ready signal **175**, the computer also removed the request signal **151** from line **123**, thereby indicating that no further transmission was desired. At the generation of the data strobe pulse **185–187**, the gating logic again removes **163** the response signal from line **125**. Since computer no longer desires to communicate, all transmission between the computer and timing control logic **129** ceases.

OUTBOUND ADDRESS GENERATOR

Referring now to FIG. **9**, an outbound address generator **193** is seen as receiving input data from a computer port **189** over multiple conductor cable **191**. An outbound address code received by the outbound address generator **193** over cable **191** is clocked into register **195** by the data strobe pulses generated by the timing control logic **129** (FIG. 7) over line **145**. The outbound address code register **195** addresses a random access memory **197**. This memory contains a plurality of outbound addresses which identify the plurality of receiving devices in the processor system. The identifying addresses are supplied to a distributor **205** (FIG. **10**) and comparator circuit **209** (FIG. **10**).

The memory **197** may be one of the many integrated circuit memories available from integrated circuit manufacturers. For example, a 64 bit, 16 × 4 random access memory may be utilized. By utilizing a random access memory to generate the actual outbound addresses, a reassignment of the computer mechanisms that are intercommunicating by way of the exchange system of this invention would only require the writing of new outbound addresses in the appropriate storage location in memory, rather than rearranging the physical cable connections.

Control Logic

Referring now to FIG. **10** the control logic **41** for the multiple data path hardware exchange system of this invention is illustrated. The control logic **41** contains a clock source **201** which is well known in the art and has a first clock output on line **137**, at a first rate, and a second clock output on line **139** at, for example, three times the first rate. This clock source is supplied to all equipment requiring timing control in the switch control interchange. As the data path scanning multiplexers **43, 47** and **51** (FIG. 4) are rapidly scanning the various ports for request-to-send signals, the states of the request lines are continuously supplied to sequencer and leap-frog control **207** over request lines **211, 213** and **215**. When a request signal is received on one or more of these lines, sequencer and leap-frog control **207**, as will be more fully explained hereinafter, generates a stop-scan signal to the appropriate data path multiplexer over cable **223, 225** or **227**.

Assuming now that one of the request lines coming into sequencer and leap-frog control **207** carries a request signal, a selector **203**, which is driven by a clock rate, supplied on line **139** that is three times as fast as the normal clock rate, connects the request signal to timing control logic **129**, over request line **123**. By providing a clock rate to selector **203** that is three times as fast as the clock rate supplied to timing control **129** over line **137**, timing control logic **129** is thereby time shared between the three illustrated independent data paths. It should be understood that a two path system would only require a two phase clock to be supplied to the selector **203**. The selector utilized for this example of these independent data paths may be an off the shelf, 4:1 selector manufactured by the integrated circuit manufacturers.

As the request signal is received on line **123** by the timing control logic **129** it will trigger the timing control **129** into its response and ready cycle, as explained in conjunction with FIGS. **7** and **8**, thereby generating data strobing pulses, on line **145**, to the outbound address generator **193**. As was explained, the outbound address generator **193** receives address codes over input cable **191** and generates outbound addresses that are supplied to distributor **205** and has the same clock

as the selector **203**. The distributor **205** can be, a 1:4 demultiplexer, manufactured by all the integrated circuit manufacturers. The output of this distributor **205** are supplied over register cables **217**, **219** and **221** to respective outbound address registers in inbound/outbound address register and comparators circuit **209**.

The comparators circuit **209** compares the inbound addresses being generated by the sequencer and leap-frog control **207** with the outbound addresses being received from the outbound address generator **193** by way of the distributor **205**. Upon certain coincidences, the comparator **209** generates signals over cable **237** to the sequencer **207** which direct it to resume scanning. In addition, the occurrence of certain coincidences in the comparator **209** prevents the outbound address generated by outbound address generator **193** from being supplied to the demultiplexers over cables **229**, 231 or **233**. Exactly how the sequencer **207** and comparator **209** accomplish the above will now be explained.

Sequencer and Leap-Frog Control

Referring now to FIG. **11**, a sequencer and leap-frog control **208** that may be used in the control logic **41** (FIG. **4**) is illustrated. For purposes, such as, ease of understanding and explanation, the sequencer and leap-frog control **208** of FIG. **11** represents a sequencer and control that would be utilized for a two path switch controller, that is, a switch controller that has two independent data path multiplexer-demultiplexer pairs. Each data path multiplexer has a sequencer assigned to it. Thus, number **1** sequencer **39** controls data path multiplexer **43** (FIG. **4**) by sending switching addresses to the multiplexer over cable **223**. Number **2** sequencer **241** controls data path multiplexer **47** (FIG. **4**) by sending switching addresses to it over cable **225**. Besides sending these switching or inbound addresses to their respective multiplexers, the sequencer and leap-frog control **208** sends these addresses to the inbound/outbound address comparator **137** (FIG. **10**) over cable **235**.

Number **1** sequencer **239** receives the inbound requests detected by number **1** data path multiplexer **43** (FIG. **4**). This request signal, when absent enables number **1** sequencer **239** and when present, disables number **1** sequencer **239**. In other words, when a request-to-send signal is received by the sequencer **239** the sequencer stops scanning. In addition to request-to-send signals, the sequencer receives clock signals over clock input line **137** and enabling signals over line **237a** from the inbound/outbound address comparators **209** (FIG. **10**). Number **1** sequencer **239** also receives a leap-frog constant select signal from a comparator **243**, over line **263**.

Number **2** sequencer **241** of the sequencer and leap-frog control **208** receives the request-to-send signals detected by the number **2** data path multiplexer **47** (FIG. **4**) over line **213**. This sequencer also receives enable signals over line **237** from the inbound/outbound address comparators **209** (FIG. **10**). The sequencer **241** receives clock pulses over clock input line **137**. A comparator **245** supplies the number **2** sequencer **241** with a leap-frog constant selecting signal over line **265**.

The comparators **243** and **245** used in the sequencer and leap-frog control **207** are bit magnitude comparators that are well known in the art and manufactured by integrated circuit manufacturers.

Comparator **243** compares the binary address next to be generated by number **1** sequencer **239**, on line **247**, with the binary address being generated by number **2** sequencer **241** on line **251**. The comparator **243** is enabled whenever number **2** sequencer **241** stops its scanning as a result of a request-to-send signal coming in on request line **213**. Thus, whenever a high to low transition occurs on line **213**, an inverter **261** produces an enable signal on line **257** to enable comparator **243**.

Comparator **245** compares the address presently being generated by number **1** sequencer **239** on line **249** with the next to be generated address by number **2** sequencer **241** on line **253**.

Comparator **245** is enabled whenever a request signal coming in on line **215** stops number **1** sequencer **239**, causing an inverter **259** to generate an enabling signal on line **255** for comparator **245**.

For a better understanding of the function of the sequencers **239** and **241**, references is now made to FIG. **12** which illustrates the contents of the sequencer **239** for the number **1** data path multiplexer. It should be understood, however, that the other sequencer **241** is identical in structure. Sequencer **239** contains an address hold register **267**. This register is a parallel-in parallel-out register. The register **267** is enabled by an enabling signal level on line **279**. A clock signal on input line **137** causes loading of the hold register **267** whenever an enable signal is present on line **279**. A register chip that may be utilized for this purpose is manufactured by integrated circuit manufacturers.

The output of the hold register **267** is supplied, in this example, to a full adder **269**. A full adder that may be utilized for this purpose is manufactured by integrated circuit manufacturers. The other input to adder **269** comes from a 2:1 selector **273**. The function of selector **273** is to connect one of the leap-frog constants **277** or **275** to the input of adder **269**. Selector **273** may be a readily available two input data selector that is manufactured by integrated circuit manufacturers. The sum of the chosen leap-frog constant, and the output of the hold register **267**, generated by adder **269**, is supplied over line **271** to the input of the hold register **267**, and clocked into same.

If, however, a request-to-send signal is received from a computer being addressed by the output of the hold register **267** over cable **223**, the comparator **243** is enabled at the same time that the loading of the hold register is disabled. The output of the adder **269** will then be compared with the output of the hold register in the number **2** sequencer **241** (FIG. **11**). If there is a coincidence, comparator **243** will generate a select signal on line **263** that is supplied to the 2:1 selector **273** to pick another leap-frog constant, thereby causing the output of the adder **269** to change.

To better understand the operation and interaction of the leap-frog constants **275**, **277** with the hold register **267** and adder **269**, consider a simple example. Assume the leap-frog constant **275** is a four digit binary number (0001) representing one and constant **277** is a four digit binary number (0010) representing two. The contents of hold register **267** may be four binary zeros to start or any other four digit combination. For purposes of example, assume that the starting address in the hold register **267** is four zeros. The first output address supplied to the number **1** multiplexer **43** of the switch control exchange **39** (FIG. **4**) is then four zeros. Assuming no request-to-send signal is received from

the computer at this address, the register **267** is not disabled and the comparator **243** is not enabled. As a result, selector **273** does not receive a select signal and thereby connects the binary one constant to the adder **269.** The output of the adder then is binary 1 (0001). This is clocked into the hold register and becomes the next inbound address for the number **1** multiplexer **43** (FIG. **4**).

Assume now, that the computer at this address (**0001**) is generating a request-to-send signal. This signal disables hold register **267** and enables comparator **243.** As a result, this binary one is compared with the present output of the hold register in the number **2** sequencer **241** (FIG. **11**). Assuming that no comparison occurs, because number **2** sequencer **241** started sequencing from a different start point, comparator **243** does not generate a select signal thereby causing the selector **273** to supply a binary 1 (0001) to the adder **269.** After completion of transmission the request signal is removed and hold register **267** is again enabled. At this time, a binary 2 (0010) will be clocked into the register. This address is the result of a binary 1 constant (0001) being added to the binary 1 (0001) output of the hold register **267** in the adder **271.** As long as there are no comparator coincidences, this type of scanning action continues, the address being generated on line **223,** by the output of hold register **267,** being sequenced in order.

Assume now that the output of the hold register **267** is a binary 5 (0101) and the output of the adder **269** a binary 6 (0110). Assume also that the computer located at address five is sending a request-to-send signal. As a result the output of adder **269** (0110) is supplied to an enabled comparator **243** (FIG. **11**) over line **247,** for comparison with the output of the hold register in the number **2** sequencer **241.** Assume that a coincidence exists, in other words, the output of the hold register in the number **2** sequencer is also 0110. This occurs if, for example, sequencer number **2** has stopped on address number **6** in response to a request signal from the computer having that address. At the occurrence of a compare, the comparator **243** (FIG. **11**) generates a select signal on line **263** that causes selector **273** to choose the leap-frog constant **277** representing a binary 2 count (0010). This four digit binary number representing two would be added to the output of hold register **267** which would be a four digit binary number representing 5 or (0101). The sum of these two four digit binary numbers would be 7 (0111). Assuming that upon completion of transmission by the computer at address five, the comparison still existed, this four digit binary number (0111) would be clocked into hold register **267** and supplied as the next address to the number **1** data path multiplexer **43** (FIG. **4**) over line **223.** As can be seen, this is a jump or leap-frog over the number six position which was occupied by the number **2** sequencer **241** (FIG. **11**).

It can be seen then, that as long as comparator **243** is not generating a compare indication on line **263,** the selector **273** will be supplying a binary one constant to the adder **269** and the number **1** sequencer **239** will be generating an address sequence without any skips. It should be understood that if more than two data paths were desired additional leap-frog constants would be made a part of this circuitry and be selected in order to provide for the situation where a pair or plurality of sequencers are stopped next to each other and a scanning sequencer has to jump over two or more of them.

The enable signal on line **279** to hold register **267** permitting the clock signal on line **137** to clock data into the hold register **267** is generated by an OR gate **281.** One input to OR gate **281** is a request-to-send signal on line **215** from the number 1 data path multiplexer **43** (FIG. **4**). The request signal on line **215,** as was indicated when describing the timing control logic **129** (FIG. **7**) in conjunction with the wave forms of FIG. **8** is a low signal level. In other words, whenever the line is high no request is being made. Whenever the signal level on line **215** is high, therefore, the signal level on line **279** should be high thereby enabling the clocking of data into hold register **267,** baring other conditions generated by inbound/outbound address comparator **209** (FIG. **10**).

As will be more fully explained hereinafter, the comparators **209** (FIG. **10**) generate a signal on line **237*a*,** which signal overrides the disabling request signal on line **215** and starts or enables the clock signal on line **137** for loading information into hold register **267.** Thus, if there is a high signal level on line **237*a*,** OR gate **281** will generate a high level on line **279.** The high level on line **237*a*** will cause line **279** to be high even though line **215** is low representing a request-to-send signal. The high level on line **279,** enables the inputting of data to hold register **267.** The only time that hold register **267** is not permitted to load data is when both the signals on line **215** and line **237*a*** are low. This produces a low level on line **279.**

Inbound/Outbound Address Comparators

Refer now to FIG. **13** which is a more specific representation of the inbound/outbound address registers and comparators **209** of FIG. **10.** This comparator configuration is for a two data path exchange and would be used with the sequencer and leap-frog control of FIG. **11.** The generation of a signal on line **237*a*** to be supplied to the sequencer leap-frog control **207** (FIG. **10**) will be explained in connection therewith. The inbound addresses from the number **1** sequencer **239** and the number **2** sequencer **24** of the sequencer and leap-frog control **208** are supplied to the inbound/outbound address registers and comparators circuit **212,** over cable **235*a*** and **235*b*.** Comparator circuit **212** also receives the outbound address being generated by outbound address generator **193** (FIG. **10**), over cable **199.** This same address is also loaded into its appropriate outbound address register **289** or **291** by the distributor **205** (FIG. **10**). Distributor **205,** as was explained, is a demultiplexer being hardwired, by way of cable **217** and **219,** to outbound address register **289** and outbound address register **291.**

Comparators **293, 295** and **299** may be identical binary comparators that are well known in the art and manufactured by integrated circuit manufacturers.

Comparator **293** compares the address generated by outbound address generator **199** with the address being supplied by the number **1** sequencer **239** (FIG. **11**). If there is a coincidence between these two addresses, comparator **293** generates a compare indication on line **333** that is supplied to AND gates **307** and **309.** At the same time that outbound address generator (FIG. **10**) is supplying the outbound address over line **199** to inbound/outbound comparators **212,** the distributor **205** (FIG. **10**) is supplying the same address to outbound

address register **289** or outbound address register **291**.

Assume, for the purposes of example, that the outbound address received is supplied to the number 1 distributor or demultiplexer **45** (FIG. 4) register **289**, at the time comparator **293** is making its comparison. AND gate enabling line **329** will go high because an address input to the outbound address register **289** will cause junction **325**, which may be a multiple input OR gate to generate a high level. A high on line **329** enables AND gates **309** and **305**. Since comparator **293** generated a compare indication, this compare indication will be passed by AND gate **309** to the number 1 sequencer **239** (FIG. 11) over line **237***a*. What this coincidence condition means is that the inbound address for the first data path is the same as the outbound address. Thereby, the sending computer is trying to address itself. By generating a signal on line **237***a* the comparator logic **212** causes the number 1 sequencer **239** (FIG. 11) to start scanning again, in the manner explained in conjunction with FIG. 12. The signal level on line **237**a will also disable multiple input AND gate **345** and prevent the address loaded into register **289** from addressing the number 1 data path demultiplexer **45** (FIG. 4).

Comparator **295** compares the address being generated by the outbound address generator on line **199** with the address being supplied by the number 2 sequencer **241** (FIG. 11). Assume again, for purposes of example, that the outbound address generated by the outbound address generator **193** is for the number 1 demultiplexer **45** (FIG. 4) and is, therefore, supplied to outbound address register **289**. The output of comparator **295** will therefore be passed by AND gate **305**. A sequencer enabling signal on line **237***a* will be supplied to number 1 sequencer **239** (FIG. 11). What this compare indication means is that the outbound address for the first data path is the same as the inbound address for the second data path. Or, in other words, the first data path is trying to address a computer that is being serviced by the second data path. The signal to the number 1 sequencer will enable it to start scanning again and disable multiple input AND gate **345** to prevent the outbound address from being supplied to the number 1 demultiplexer **45**.

Assume now that the address being generated by the outbound address generator **193** is for the number 2 data path demultiplexer **49** (FIG. 4). If comparator **293** generates a compare indication under this condition, that means that the number 2 data path demultiplexer **45** is settling on an address that the number 1 data path multiplexer **43** has stopped on. As a consequence, comparator **293** will generate a compare indication that will be passed by AND gate **307** to start the number 2 sequencer scanning again and prevent the multiple input AND gate **347** from passing this outbound address to the number 2 data path demultiplexer **49** (FIG. 4). AND gate **307** will be enabled by an enabling signal on line **331** generated by logic at point **327** which could be a multiple input OR gate.

If the outbound address being generated by outbound address generator **193** were equal to an address coming from number 2 sequencer **241**, comparator **295** would recognize this condition. This would mean that the computer connected to the address on which the number 2 data path multiplexer stopped is trying to address itself. A compare indication, from comparator **295** would be passed by AND gate **303** to start the number 2 sequencer scanning again and prevent the content of the outbound address register from being supplied to the number 2 data path demultiplexer **49** (FIG. 4).

Comparator **299** compares the contents of outbound address register **289** with the contents of outbound address register **291**. Two AND gates **301** and **343** receive the compare indication from comparator **299**. AND gate **301** is enabled whenever an address is being loaded into outbound address generator **293**. Logic at point **327** (multiple input OR gate) detects this condition. This OR gate would generate a high enabling level for AND gate **301**. Assuming a compare indication was generated, a compare indication would be sent to the number 2 sequencer on line **273***b* instructing the number 2 sequencer to continue scanning and disable AND gate **347**, preventing passing the address in the number 2 demultiplexer **291** over cable **231**. This condition occurs whenever, in the particular example illustrated, the first data path has been established between the number one multiplexer and demultiplexer thereby storing an outbound address in register **289** with the second data path trying to address the same destination by bringing in the identical address in outbound address register **291**.

SUMMARY

In summary, what has been disclosed is a multiple data path system for interconnecting computer pairs in a multi-computer system which establishes simultaneous multiple independent and unidirectional data paths between them. Scanning of the computers for request-to-send signals is accomplished without interferring with already established data paths. The compatable scanning of a plurality of scanning devices is accomplished by the utilization of leap-frog logic. In the case when an addressed computer, or the intended receiver is busy, the scanning mechanism attempting to establish the data path is instructed to resume scanning. The leap-frog logic and control mechanism that provides for leap-frog scanning is easily adaptable for use with a plurality of different leap-frog constants.

Obviously, many modifications and variations of the present invention are possible in light of the above teachings. It is therefore to be understood that within the scope of the appended claims, the invention may be practiced otherwise then as specifically described.

What is claimed is:

1. In a multi-computer processor system wherein a plurality of computers generate request-to-send signals indicating a desire to be connected to another computer or device over one of N independent unidirectional data paths, a multiple data path hardware exchange system, comprising:

N scanning means, each of said scanning means connecting and disconnecting a first end of a data path from the output lines of each said computers;

sequencing means for directing the sequential connecting and disconnecting of each said N scanning means, said sequencing means responding to a request-to-send signal from a particular computer by maintaining a scanning means connected to said particular computer, said sequencing means causing all other scanning means to leap-frog the connected scanning means; and

N distribution means, each of said distribution means connecting the second end of the data path to the input lines of another computer or device.

2. The multiple data path hardware exchange system of claim 1 wherein each of said N scanning means comprises X, Y:1 multiplexers, X being the number of output lines per data path and Y being the number of computers and devices in said processor system.

3. The multiple data path hardware exchange system of claim 1 wherein said sequencing means comprises:
means for generating inbound addresses for each of said N scanning means;
means for detecting when a particular scanning means is quiescent at a particular address; and
means for directing said inbound address generating means to leap-frog the inbound address at which said particular scanning means is quiescent.

4. The multiple data path hardware exchange system of claim 3 wherein said means for generating inbound addresses comprises: N sequencers, each sequencer generating an address for its respective scanning means.

5. The multiple data path hardware exchange system of claim 4 wherein said detecting means comprises: a plurality of comparators, each comparator comparing the next address to be generated by a first sequencer with the present address of a second sequencer.

6. The multiple data path hardware exchange system of claim 3 wherein said leap-frog directing means comprises: a leap-frog constant store means.

7. The multiple data path hardware exchange system of claim 3 wherein said means for generating inbound addresses comprises N sequencers, each sequencer comprising:
an address hold register; and
a full adder receiving the output of said address register as a first input and supplying its output to the input of said hold register.

8. The multiple data path hardware exchange system of claim 7 wherein said detecting means comprises: a plurality of comparators, each comparator comparing the output of said full adder in a first sequencer with the output of said hold register in a second sequencer.

9. The multiple data path hardware exchange system of claim 8 wherein said directing means comprises N directing means, each directing means comprising:
a storage means containing a plurality of leap-frog constants; and
means responsive to a particular said comparator for selecting a leap-frog constant from said storage means and supplying it to said full adder as a second input.

10. The multiple data path hardware exchange system of claim 7 wherein said directing means comprises:
a storage means containing a plurality of leap-frog constants; and
means responsive to a particular said comparator for selecting a leap-frog constant from said storage means and supplying it to said full adder in one of said N sequencers.

11. The multiple data path hardware exchange system of claim 3 further comprising:
an outbound address generating means responding to a destination code from a computer for generating outbound addresses for each of said N distribution means; and
an inbound/outbound address comparator means for comparing addresses from said outbound address generating means and address from said inbound address generating means.

12. The multiple data path hardware exchange system of claim 11 wherein said outbound address generating means comprises:
a register means for receiving a destination code from a computer by way of said scanning means; and
a memory means responsive to the destination code in said register means for generating an outbound address.

13. The multiple data path hardware exchange system of claim 11 wherein said inbound/outbound address comparator means comprises:
a plurality of binary comparator means,
a first comparator means comparing the present outbound address with an inbound address for one of said N scanning means; and
a second comparator means comparing the present outbound address with a previous outbound address generated by said outbound address generating means.

14. The multiple data path hardware exchange system of claim 13 further comprising: means for routing indications of a match from said plurality of comparator means in said inbound/outbound address comparator means to respective inbound address generating means.

15. The multiple data path hardware exchange system of claim 1 wherein each of said N distribution means comprises: X, 1:Y demultiplexers, X being the number of input lines per data path and Y being the number of computers and devices in said processor system.

16. In a multi-computer processor system wherein a plurality of computers generate request-to-send signals indicating a desire to be connected to another computer or device over one of N independent unidirectional paths made available by N scanning means and N distribution means, an interchange control mechanisms for regulating said scanning means and distributing means, comprising:
timing control logic responsive to request-to-send signals from said plurality of computers, transmitted to said timing control logic by said N scanning means;
scanning control means responsive to request-to-send signals received from said N scanning means for controlling the movement of said N scanning means by generating inbound addresses for said N scanning means;
an outbound address generator for receiving an address code from a computer that has had its request-to-send signal acknowledged by said timing control logic, and generating on outbound address for a particular one of said N distribution means; and
comparator means for receiving inbound addresses from said address generator and comparing them.

17. The interchange control mechanism of claim 16 wherein said scanning control means comprises:
N sequencing means, one for each of said N scanning means, for generating inbound addresses for their respective scanning means; and
a plurality of comparator means, a first comparator comparing the next address to be generated by a first of said N sequencing means with the address presently being generated by a second of said N sequencing means.

18. The interchange control mechanism of claim 17 wherein said N sequencing means each comprises:
an address hold register; and
a binary full adder receiving the output of said address register as a first input and supplying its output to the input of said hold register.

19. The interchange control mechanism of claim 18 wherein said N sequencing means each further comprises:
storage means containing a plurality of binary leap-frog constants; and
selector means responsive to said comparator means for selecting one of said leap-frog constants and supplying it to said full adder as a second input.

20. The interchange control mechanism of claim 16 wherein said comparator means comprises:
a plurality of binary comparator means,
a first comparator means comparing the present outbound address with an inbound address for one of said N scanning means; and
a second comparator means comparing the present outbound address with a previous outbound address generated by said outbound address generating means.

21. The interchange control mechanism of claim 20 further comprising: means for routing indications of a match from said plurality of comparator means to respective said scanning control means.

22. A binary address generator for simultaneously stepping a plurality of scanning devices, comprising:
a plurality of sequencers, equal in number to said scanning devices, each sequencer generating a sequence of multiple bit codes; and
a plurality of comparators connected between said plurality of sequencers and comparing the multiple bit codes from said plurality of sequencers, a first comparator comparing the multiple bit code to be released by a first sequencer with the multiple bit code being released by a second sequencer.

23. The binary address generator of claim 22 wherein said first comparator is enabled whenever said second sequencer is disabled.

24. The binary address generator of claim 22 further comprising: means responsive to a compare indication from a comparator for changing the sequence of a particular sequencer of said plurality of sequencers.

25. The binary address generator of claim 24 wherein said sequence changing means comprises:
storage means containing a plurality of binary bit codes; and
selector means for selecting one of said binary bit codes.

26. The binary address generator of claim 22 wherein each sequencer of said plurality of sequencers comprises:
a hold register for a plurality of binary bits; and
a full adder having a first input connected to the output of said hold register and its output connected to the input of said hold register.

27. The binary address generator of claim 26 further comprising:
storage means containing a plurality of binary bit codes; and
selector means for selecting one of said binary codes and supplying it as a second input to said full adder.

28. The binary address generator of claim 27 wherein said selector means responds to a compare indication from one of said plurality of comparators for selecting a particular binary code to be supplied to said full adder.

29. A method for simultaneously stepping a plurality of scanning devices, comprising:
generating a separate sequence of multiple bit codes for each one of said plurality of scanning devices; and
comparing the multiple bit code to be generated for a first scanning device with the multiple bit code being generated for a second scanning device.

30. The method of claim 29, further comprising: changing the sequence being generated for a particular scanning device in response to a compare indication resulting from said comparing step.

* * * * *