FAIRCHILD SEMICONDUCTOR®

Click here for this datasheet translated into Chinese!

November 2010

# FSUSB63 — 3:1 High-Speed USB 2.0 Switch / Multiplexer

## Features

| | |
|---|---|
| Switch Type | 3:1 USB Switch |
| USB | USB 2.0 High-Speed & Full-Speed Compliant |
| Break-Before-Make Time | 126µs |
| $R_{ON}$ | 6Ω Typical |
| $C_{ON}$ | 6pF Typical |
| Bandwidth | 830MHz |
| $V_{CC}$ | 2.7 to 4.4V |
| $V_{CNTRL}$ | 0 to $V_{CC}$ |
| Operating Temperature | -40°C to 85°C |
| $I_{CCSLP}$ | <1µA |
| $I_{CCACT}$ | 7.5µA Typical |
| Package | 12- Lead UMLP 1.80 x 1.80 x 0.55mm, 0.40mm pitch |
| Top Mark | KG |
| Ordering Information | FSUSB63UMX |

## Applications

- Cell Phone, Digital Camera, Notebook
- LCD Monitor, TV, and Set-Top Box
- Netbook, Mobile Internet Device (MID)

## Description

The FSUSB63 is a bi-directional, low-power, High-Speed (HS) USB 2.0 3:1 Multiplexer (MUX). It is optimized for switching among three high-speed (480Mbps) sources or any combination of high-speed and full-speed (12Mbps) USB sources, such as an application processor, to one USB 2.0 connector.

The FSUSB63 has a break-before-make time to force re-enumeration by the host when switching between different HS USB 2.0 controllers and thus requires minimal software changes.

The FSUSB63 is compliant with the requirements of USB 2.0 and features extremely low on capacitance ($C_{ON}$). The wide bandwidth exceeds the requirement to pass the third harmonic, resulting in signals with minimum edge and phase distortion. Superior channel-to-channel crosstalk also minimizes interference.

## Related Resources

- *For samples and questions, please contact: Analog.Switch@fairchildsemi.com.*
- FSUSB63 Demonstration Board

## Typical Application

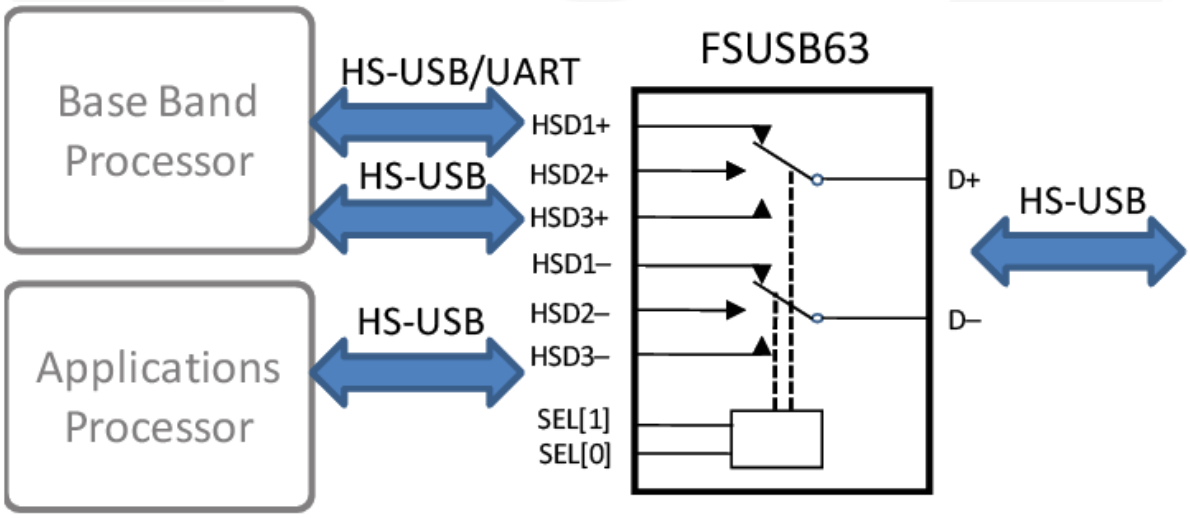


**Figure 1. Analog Symbol**

© 2010 Fairchild Semiconductor Corporation


Microchip Ex. 1060, p. 1
Microchip v. Aptiv
IPR2024-00230

## Physical Dimensions

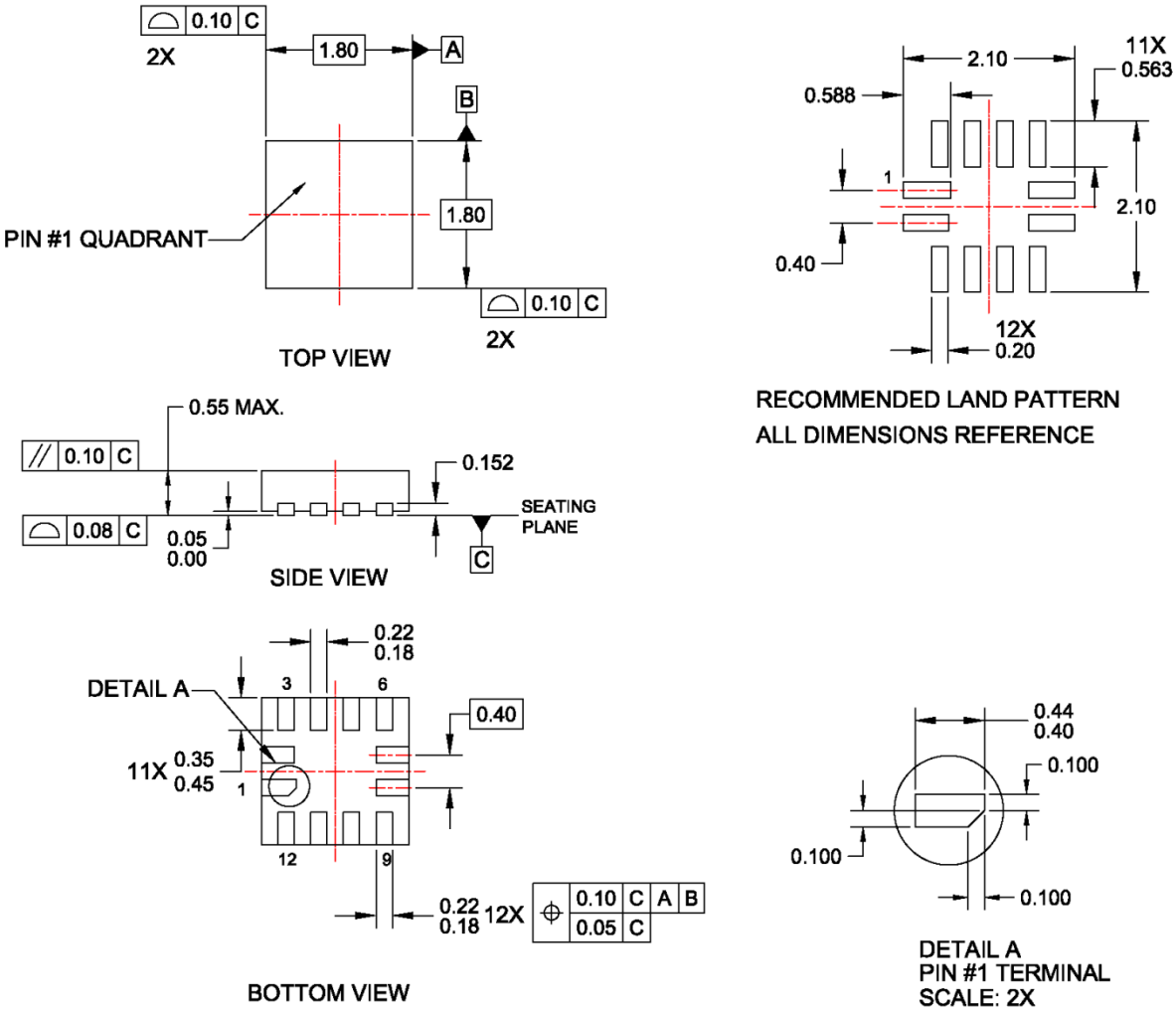


NOTES:

A. DIMENSIONS ARE IN MILLIMETERS.
B. DIMENSIONS AND TOLERANCES PER ASME Y14.5M, 1994
C. LANDPATTERN IS A MINIMAL TOE DESIGN
D. DRAWING FILENAME: UMLP12Arev3

**Figure 17. 12-Lead, Ultrathin Molded Leadless Package (UMLP)**

### Ordering Information

| Part Number | Top Mark | Operating Temperature Range | Package |
|---|---|---|---|
| FSUSB63UMX | KG | -40 to +85°C | 12-Lead, Quad, Ultrathin Molded Leadless Package (UMLP), 1.8mm x 1.8mm x 0.55mm, 0.4mm pitch |

*Package drawings are provided as a service to customers considering Fairchild components. Drawings may change in any manner without notice. Please note the revision and/or date on the drawing and contact a Fairchild Semiconductor representative to verify or obtain the most recent revision. Package specifications do not expand the terms of Fairchild's worldwide terms and conditions, specifically the warranty therein, which covers Fairchild products.*

*Always visit Fairchild Semiconductor's online packaging area for the most recent package drawings: http://www.fairchildsemi.com/packaging/.*



Microchip Ex. 1060, p. 2
Microchip v. Aptiv
IPR2024-00230

FAIRCHILD SEMICONDUCTOR®

## TRADEMARKS

The following includes registered and unregistered trademarks and service marks, owned by Fairchild Semiconductor and/or its global subsidiaries, and is not intended to be an exhaustive list of all such trademarks.

AccuPower™
Auto-SPM™
Build it Now™
CorePLUS™
CorePOWER™
*CROSSVOLT*™
CTL™
Current Transfer Logic™
DEUXPEED®
Dual Cool™
EcoSPARK®
EfficientMax™
ESBC™
®
Fairchild®
Fairchild Semiconductor®
FACT Quiet Series™
FACT®
FAST®
FastvCore™
FETBench™
FlashWriter®*
FPS™
F-PFS™
FRFET®
Global Power Resource℠
Green FPS™
Green FPS™ e-Series™
G*max*™
GTO™
IntelliMAX™
ISOPLANAR™
MegaBuck™
MICROCOUPLER™
MicroFET™
MicroPak™
MicroPak2™
MillerDrive™
MotionMax™
Motion-SPM™
OptoHiT™
OPTOLOGIC®
OPTOPLANAR®
®
PDP SPM™
Power-SPM™
PowerTrench®
PowerXS™
Programmable Active Droop™
QFET®
QS™
Quiet Series™
RapidConfigure™
™
Saving our world, 1mW/W/kW at a time™
SignalWise™
SmartMax™
SMART START™
SPM®
STEALTH™
SuperFET®
SuperSOT™-3
SuperSOT™-6
SuperSOT™-8
SupreMOS®
SyncFET™
Sync-Lock™
SYSTEM GENERAL®*
The Power Franchise®
the power franchise
TinyBoost™
TinyBuck™
TinyCalc™
TinyLogic®
TINYOPTO™
TinyPower™
TinyPWM™
TinyWire™
TriFault Detect™
TRUECURRENT™*
µSerDes™
µSerDes™
UHC®
Ultra FRFET™
UniFET™
VCX™
VisualMax™
XS™

* Trademarks of System General Corporation, used under license by Fairchild Semiconductor.

## DISCLAIMER

FAIRCHILD SEMICONDUCTOR RESERVES THE RIGHT TO MAKE CHANGES WITHOUT FURTHER NOTICE TO ANY PRODUCTS HEREIN TO IMPROVE RELIABILITY, FUNCTION, OR DESIGN. FAIRCHILD DOES NOT ASSUME ANY LIABILITY ARISING OUT OF THE APPLICATION OR USE OF ANY PRODUCT OR CIRCUIT DESCRIBED HEREIN; NEITHER DOES IT CONVEY ANY LICENSE UNDER ITS PATENT RIGHTS, NOR THE RIGHTS OF OTHERS. THESE SPECIFICATIONS DO NOT EXPAND THE TERMS OF FAIRCHILD'S WORLDWIDE TERMS AND CONDITIONS, SPECIFICALLY THE WARRANTY THEREIN, WHICH COVERS THESE PRODUCTS.

## LIFE SUPPORT POLICY

FAIRCHILD'S PRODUCTS ARE NOT AUTHORIZED FOR USE AS CRITICAL COMPONENTS IN LIFE SUPPORT DEVICES OR SYSTEMS WITHOUT THE EXPRESS WRITTEN APPROVAL OF FAIRCHILD SEMICONDUCTOR CORPORATION.

As used herein:

1. Life support devices or systems are devices or systems which, (a) are intended for surgical implant into the body or (b) support or sustain life, and (c) whose failure to perform when properly used in accordance with instructions for use provided in the labeling, can be reasonably expected to result in a significant injury of the user.
2. A critical component in any component of a life support, device, or system whose failure to perform can be reasonably expected to cause the failure of the life support device or system, or to affect its safety or effectiveness.

## ANTI-COUNTERFEITING POLICY

Fairchild Semiconductor Corporation's Anti-Counterfeiting Policy. Fairchild's Anti-Counterfeiting Policy is also stated on our external website, www.fairchildsemi.com, under Sales Support.

Counterfeiting of semiconductor parts is a growing problem in the industry. All manufacturers of semiconductor products are experiencing counterfeiting of their parts. Customers who inadvertently purchase counterfeit parts experience many problems such as loss of brand reputation, substandard performance, failed applications, and increased cost of production and manufacturing delays. Fairchild is taking strong measures to protect ourselves and our customers from the proliferation of counterfeit parts. Fairchild strongly encourages customers to purchase Fairchild parts either directly from Fairchild or from Authorized Fairchild Distributors who are listed by country on our web page cited above. Products customers buy either from Fairchild directly or from Authorized Fairchild Distributors are genuine parts, have full traceability, meet Fairchild's quality standards for handling and storage and provide access to Fairchild's full range of up-to-date technical and product information. Fairchild and our Authorized Distributors will stand behind all warranties and will appropriately address any warranty issues that may arise. Fairchild will not provide any warranty coverage or other assistance for parts bought from Unauthorized Sources. Fairchild is committed to combat this global problem and encourage our customers to do their part in stopping this practice by buying direct or from authorized distributors.

## PRODUCT STATUS DEFINITIONS

### Definition of Terms

| Datasheet Identification | Product Status | Definition |
|---|---|---|
| Advance Information | Formative / In Design | Datasheet contains the design specifications for product development. Specifications may change in any manner without notice. |
| Preliminary | First Production | Datasheet contains preliminary data; supplementary data will be published at a later date. Fairchild Semiconductor reserves the right to make changes at any time without notice to improve design. |
| No Identification Needed | Full Production | Datasheet contains final specifications. Fairchild Semiconductor reserves the right to make changes at any time without notice to improve the design. |
| Obsolete | Not In Production | Datasheet contains specifications on a product that is discontinued by Fairchild Semiconductor. The datasheet is for reference information only. |

Rev. I50



Microchip Ex. 1060, p. 3
Microchip v. Aptiv
IPR2024-00230