AFFIDAVIT OF NATHANIEL E FRANK-WHITE

1. I am a Records Request Processor at the Internet Archive. I make this declaration of my own personal knowledge.

2. The Internet Archive is a website that provides access to a digital library of Internet sites and other cultural artifacts in digital form. Like a paper library, we provide free access to researchers, historians, scholars, and the general public. The Internet Archive has partnered with and receives support from various institutions, including the Library of Congress.

3. The Internet Archive has created a service known as the Wayback Machine. The Wayback Machine makes it possible to browse more than 450 billion pages stored in the Internet Archive's web archive. Visitors to the Wayback Machine can search archives by URL (i.e., a website address). If archived records for a URL are available, the visitor will be presented with a display of available dates. The visitor may select one of those dates, and begin browsing an archived version of the Web. Links on archived files in the Wayback Machine point to other archived files (whether HTML pages or other file types), if any are found for the URL indicated by a given link. For instance, the Wayback Machine is designed such that when a visitor clicks on a hyperlink on an archived page that points to another URL, the visitor will be served the archived file found for the hyperlink's URL with the closest available date to the initial file containing the hyperlink.

4. The archived data made viewable and browsable by the Wayback Machine is obtained by use of web archiving software that automatically stores copies of files available via the Internet, each file preserved as it existed at a particular point in time.

5. The Internet Archive assigns a URL on its site to the archived files in the format http://web.archive.org/web/[Year in yyyy][Month in mm][Day in dd][Time code in hh:mm:ss]/[Archived URL] aka an "extended URL". Thus, the extended URL http://web.archive.org/web/19970126045828/http://www.archive.org/ would be the URL for the record of the Internet Archive home page HTML file (http://www.archive.org/) archived on January 26, 1997 at 4:58 a.m. and 28 seconds (1997/01/26 at 04:58:28). The date indicated by an extended URL applies to a preserved instance of a file for a given URL, but not necessarily to any other files linked therein. Thus, in the case of a page constituted by a primary HTML file and other separate files (e.g., files with images, audio, multimedia, design elements, or other embedded content) linked within that primary HTML file, the primary HTML file and the other files will each have their own respective extended URLs and may not have been archived on the same dates.

6. Attached hereto as Exhibit A are true and accurate copies of screenshots of the Internet Archive's records of the archived files for the URLs and the dates specified in the attached coversheet of each printout.

Microchip Ex. 1062, p. 1
Microchip v. Aptiv
IPR2024-00230

7. Attached hereto as Exhibit B are true and accurate copies of the Internet Archive's records of the archived files for the URLs and the dates specified in the following table.

Folder	URL
001	https://web.archive.org/web/20040417091747/http://www.netchip.com/library/spec/1080spec06.pdf
002	https://web.archive.org/web/20101230133512/http://www.fairchildsemi.com/ds/FS/FSUSB63.pdf

8. I declare under penalty of perjury that the foregoing is true and correct.

DATE: 08/31/2023

Nathaniel Frank-White

Nathaniel E Frank-White

Please see attached All Purpose Jurat form for additional Notary Events

EXHIBIT A

Microchip Ex. 1062, p. 3
Microchip v. Aptiv
IPR2024-00230

INTERNET ARCHIVE WayBackMachine http://www.intechweb.org/subject/engineering/automotive-industry Go JAN FEB MAY 28 2010 2011 2012 About this capture
8 captures
2 Nov 2010 - 16 Sep 2011

Browse Books by Subject

- Biological Sciences (18)
- Computer and Information Science (108)
- Earth Sciences (15)
- Electrical and Electronic Engineering (128)
- **Engineering (86)**
  - Aerospace Engineering (6)
  - **Automotive Industry (5)**
  - Civil Engineering (4)
  - Control Engineering (11)
  - Energy Engineering (14)
  - Engineering Management (6)
  - Environmental Engineering (17)
  - Industrial Engineering (12)
  - Mechanical Engineering (15)
  - Structural Engineering (4)
  - Systems Engineering (12)
  - Textile Engineering (1)
- Materials Science (27)
- Medicine (17)
- Technology (39)

Engineering > Automotive Industry

Automotive Industry

Wind Tunnels
Edited by Satoru Okamoto
ISBN 978-953-307-295-1
136 pages, February 2011
140 Downloads

New Trends and Developments in Automotive Industry
Edited by Marcello Chiaberge
ISBN 978-953-307-999-8
394 pages, January 2011
130 Downloads

New Trends and Developments in Automotive System Engineering
Edited by Marcello Chiaberge
ISBN 978-953-307-517-4
664 pages, January 2011
118 Downloads

Urban Transport and Hybrid Vehicles
Edited by Seref Soylu
ISBN 978-953-307-100-8
192 pages, August 2010
620 Downloads

Fuel Injection
Edited by Daniela Siano
ISBN 978-953-307-116-9
254 pages, August 2010
685 Downloads

Publish with InTech

- High quality publications
- High impact and visibility
- Worldwide readership
- No copyright transfer
- Efficient publishing process
- Free access to research

Publish Your Work

Open Access

OPEN ACCESS

Freely Accesible Scientific Literature. Higher Impact. Global Reach.

Find out more

News

- 5th Anniversary of the First Book Published
- InTech Authors Recipients of IEEE Awards
- InTech Supports the Open Archives Initiative
- InTech Presents InTechOpen

Document Id: 56156430-4862-11EE-83B2-91F976FCC1DF
OnlineNotary.net

Microchip Ex. 1062, p. 5
Microchip v. Aptiv
IPR2024-00230

Our Story
Facts and Figures
Social Responsibility
Scientific Board
Blog
InTechOpen
Jobs at InTech
Contact

Open Access Resources
OA Research Funders
For Libraries
OAI-PMH

Benefits for Authors
Invited Authors
Start Your Own Book
Propose a Book Title
Participate in a Book Project
Contribute to a Journal
Start Your Own Journal
FAQs

Become a Reviewer
Share Free Knowledge
Buy Print Copies

TRUSTe CERTIFIED PRIVACY

Copyright Policy | Terms of Use | Privacy Policy
InTech - Open Access Publisher © 2004 - 2011

https://web.archive.org/web/20110228104948/http://www.intechopen.com:80/books/show/title/new-trends-and-developments-in-automotive-system-engineering

INTERNET ARCHIVE WayBackMachine http://www.intechopen.com/books/show/title/new-trends-and-developments-in-automotive-system-engineering Go JAN FEB 28 2011 FEB 2010 2022 About this capture
4 captures
28 Feb 2011 - 3 Mar 2022

Browse By Subject

- Biological Sciences (18)
- Computer and Information Science (108)
- Earth Sciences (15)
- Electrical and Electronic Engineering (128)
- **Engineering (86)**
  - Aerospace Engineering (6)
  - **Automotive Industry (5)**
  - Civil Engineering (4)
  - Control Engineering (11)
  - Energy Engineering (14)
  - Engineering Management (6)
  - Environmental Engineering (17)
  - Industrial Engineering (12)
  - Mechanical Engineering (15)
  - Structural Engineering (4)
  - Systems Engineering (12)
  - Textile Engineering (1)
- Materials Science (27)
- Medicine (17)
- Technology (39)

Share the Knowledge!

citeulike

404 Not Found

nginx/1.25.1

Engineering > Automotive Industry

New Trends and Developments in Automotive System Engineering

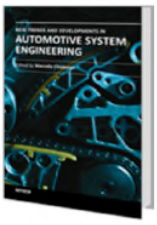

Edited by: Marcello Chiaberge

ISBN 978-953-307-517-4, Hard cover, 664 pages
Publisher: InTech
Publication date: January 2011
Subject: Automotive Industry

In the last few years the automobile design process is required to become more responsible and responsibly related to environmental needs. Basing the automotive design not only on the appearance, the visual appearance of the vehicle needs to be thought together and deeply integrated with the "power" developed by the engine. The purpose of this book is to try to present the new technologies development scenario, and not to give any indication about the direction that should be given to the research in this complex and multi-disciplinary challenging field.

Download zipped PDF 55.25 Mb

Downloaded 119 times

Bookmark to: citeulike

Table of Contents

Experimental Test of a Diesel Engine Using Envo-Diesel as an Alternative Fuel
M.A.Kalam and H.H. Masjuki

Analytical Methods for Determining Automotive Fuel Composition
Jonas Gruber, Renata Lippi, Rosamaria W. C. Li and Adriano R. V. Benvenho

Automotive Fuel Consumption in Brazil: Applying Static and Dynamic Systems of Demand Equations
Mariana Iootty, Helder Pinto Jr. and Francisco Ebeling

Fatigue and Fracture Behavior of Forging Die Steels
Ryuichiro Ebara

Optimization of Injection Moulded Polymer Automotive Components
Ribeiro, C.J. and Viana, J.C.

High Mn TWIP Steels for Automotive Applications
B. C. De Cooman, Kwang-geun Chin and Jinkyung Kim

Powder Injection Moulding - An Alternative Processing Method for Automotive Items
Berenika Hausnerova

Thermomechanical and Isothermal Fatigue Behavior of Gray Cast Iron for Automotive Brake Discs
Omar Maluf, Jéferson Aparecido Moreto, Maurício Angeloni, Marco Antônio Colósio, José Carlos Santos, Waldek Wladimir Bose Filho and Dirceu Spinelli

Advanced Robotic Radiative Process Control for Automotive Coatings
Fan Zeng and Beshah Ayalew

DC/DC Step-Up Converters for Automotive Applications: a FPGA Based Approach
M. Chiaberge, G. Botto and M. De Giuseppe

The Thermo-Mechanical Behavior in Automotive Brake and Clutch Systems
Abdullah M. Al-Shabibi

Microchip Ex. 1062, p. 8
Microchip v. Aptiv
IPR2024-00230

Dynamic Analysis of an Automobile Lower Suspension Arm Using Experiment and Numerical Technique
S. Abdullah, N.A. Kadhim, A.K. Ariffin and M. Hosseini

Increased Cooling Power with Nucleate Boiling Flow in Automotive Engine Applications
Helfried Steiner, Günter Brenn, Franz Ramstorfer and Bernd Breitschädel

The 'Equivalent Cable Bundle Method': an Efficient Multiconductor Reduction Technique to Model Industrial Cable Networks
Guillaume Andrieu, Xavier Bunlon, Lamine Koné, Jean-Philippe Parmantier, Bernard Démoulin and Alain Reinelxl

Fatigue Characteristics of Automotive Jounce Bumper
Aidy Ali, R.S. Sidhu and M.S.A. Samad

On the Control of Automotive Traction PEM Fuel Cell Systems
Ahmed Al-Durra, Stephen Yurkovich and Yann Guezennec

An Adaptive Two-Stage Observer in the Control of a New Electromagnetic Valve Actuator for Camless Internal Combustion Engines
Paolo Mercorelli

Integrated Controller Design for Automotive Semi-Active Suspension Considering Vehicle Behavior with Steering Input
Masaki Takahashi, Takashi Kumamaru and Kazuo Yoshida

Design of an Embedded Controller for Some Applications of an Automotives
Preeti Bajaj and Dinesh Padole

Arbitration Schemes for Multiprocessor Shared Bus
Preeti Bajaj and Dinesh Padole

Towards Automotive Embedded Systems with Self-X Properties
Gereon Weiss, Marc Zeller and Dirk Eilers

4D Ground Plane Estimation Algorithm for Advanced Driver Assistance Systems
Faisal Mufti, Robert Mahony and Jochen Heinzmann

The Car Entertainment System
Niels Koch

Information and Communication Support for Automotive Testing and Validation
Mathias Johanson

Trends Towards Automotive Electronic Vision Systems for Mitigation of Accidents in Safety Critical Situations
Ciarán Hughes, Ronan O'Malley, Diarmaid O'Cualain, Martin Glavin and Edward Jones

Advancements in Automotive Antennas
Brendan D. Pell, Edin Sulic, Wayne S. T. Rowe, Kamran Ghorbani and Sabu John

Automotive VHDL-AMS Electro-Mechanics Simulations
Mariagrazia Graziano and Massimo Ruo Roch

Potential and Drawbacks of Raman (Micro)spectrometry for the Understanding of Iron and Steel Corrosion
Philippe Colomban

Computational Techniques for Automotive Antenna Simulations
Falk Bogdanov, Roman Jobava, David Karkashadze, Paata Tsereteli, Anna Gheonjian, Ekaterina Yavolovskaya, Detlef Schleicher, Christoph Ullrich and Hicham Tazi

Voltage Stability Analysis of Automotive Power Nets based on Modeling and Experimental Results
Tom P. Kohler, Rainer Gehring, Joachim Froeschl, Dominik Buecherl and Hans-Georg Herzog

Urban and Extra Urban Vehicles: Re-Thinking the Vehicle Design
Andrea Festini, Andrea Tonoli and Enrico Zenerino

Analysis Approach of How University Automotive Competitions Help

Microchip Ex. 1062, p. 9
Microchip v. Aptiv
IPR2024-00230

Students to Accelerate their Automotive Engineer Profile
Francisco J. Sánchez-Alejo, Miguel A. Álvarez, Francisco Aparicio and José M. López

About InTechOpen

About us
About InTech
Link to us
Contact

Open Access

About Open Access
How to reference
For Libraries
OAI-PMH
InTechOpen Copyright Policy

Connect with us

Blog
Twitter
Facebook
YouTube

© 2004 - 2011 InTech - Open Access Publisher

Microchip Ex. 1062, p. 10
Microchip v. Aptiv
IPR2024-00230

https://web.archive.org/web/20070826063456/http://www.epn-online.com:80/topProduct/liste/cat/Digital+ICs/subCat/ASICs%2C+ASSPs+and+Gate+Arrays

Microchip Ex. 1062, p. 11
Microchip v. Aptiv
IPR2024-00230

INTERNET ARCHIVE WayBackMachine
http://www.epn-online.com/topProduct/liste/cat/Digital%2BICs/subCat/ASICs%2C%2BASSPs%2Band%2BGate%2BArrays Go
10 captures
26 Aug 2007 - 12 Jun 2012
JUL AUG OCT 26 2006 2007 2008 About this capture

EPN Magazine issue August 2007
Sample issue
FREE : subscribe now GO

TOP PRODUCTS

Product group : Digital ICs
Product Sub-group : ASICs, ASSPs and Gate Arrays

Display: 25

Low Bit-Rate RALCWI Vocoder IC
(17/08/2007)
The CMX618 is a flexible, half-duplex, highly integrated RALCWI (Robust Advanced Low Complexity Waveform Interpolation) vocoder IC suited to both wireless and wireline voice applications such as voice scramblers, alarm systems, military field applications and digital professional... More

Embedded Array
(01/06/2007)
Leveraging the company's expertise in structured-ASIC technology, ChipX has introduced a series of embedded-array products built using UMC's 0.13µm high-speed process. These arrays allow engineers to avoid opting for a fully customised standard-cell design, which are often expens... More

MCU Solution
(01/05/2007)
Innovasic has now announced the availability of a TCP/IP stack for its established fido1100 series of industrial microcontroller devices. The stack will allow users to configure one of the microcontroller's UICs (Universal I/O Controllers) to communicate with other semiconductor ... More

Single-Chip UMTS Solution
(01/03/2007)
The QSC6240 chip for WEDGE (WCDMA and GSM/GPRS/EDGE) and the QSC6270 product for HEDGE (HSDPA/WCDMA and GSM/GPRS/EDGE) are the world's first single chips to combine a radio transceiver, a baseband modem and a multimedia processor together with power management functionality onto ... More

55nm Cell-Based IC
(01/03/2007)
The CB-55L is a cell-based integrated circuit built on NEC's 55nm UX7LS process technology. The ASIC demonstrates a 40% reduction in power consumption from the previous 90nm CB-90M. The CB-55L has more than twice the density of previous devices, fitting 925,000 gates per mm2. It ... More

Video-Processing IC
(01/03/2007)
The ABT2010 video-processing IC has been designed for format-conversion applications in HDTVs; DVD, HD-DVD, and Blu-Ray player/recorders; and AV receivers. Features of the video-processing chip include 10-bit precision video scaling that can independently scale an image horizonta... More

Mobile TV Chips
(01/03/2007)
The DIB908x-H has been designed to offer a cost-effective DVB-H-only solution for integration into mobile phones. The IC includes a demodulator, a second-generation multi-band RF tuner, an LNA and all filters while being only half as big its predecessor. A multi-mode, multi-band ... More

eASIC, ASIC Architect join hands to deliver PCI Express (PCIe) Endpoint Controller and DDR2 memory controller
(08/02/2007)
eASIC Corporation, a provider of Structured ASIC devices and Configurable logic IP, and ASICArchitect, a leading supplier of high speed IP cores, have unveiled the immediate availability of two new high-speed interfaces for eASIC's 90nm Nextreme Structured ASIC Family: PCI Expres... More

Low-Cost Cell-Phone Platform
(01/02/2007)
Targeting the market's largest segment, the TrueNTRY X122 low-cost cellular-phone platform consists of silicon chips, software (including Agere's proven protocol stack and frameworks) and a development kit. It platform adheres to the General Packet Radio Service (GPRS) cellular s... More

USB In Automotive: No Longer Just For PCs
(01/09/2006)
Media inside the automobile has followed in the footsteps of consumer electronics. From eight-track players to cassettes to CDs, it's clear that MP3 is next in line. Well over 150 million consumers have an iPod or MP3-equivalent, and FM transmitters and factory-installed iPod doc... More

Digital Audio Processor
(01/09/2006)
Aimed at mobile applications, the 5x5mm PSM711LQ is a high-performance sound processor combined with a digital power amplifier. It supports 1.4W in parallel mono speaker drive mode, two 800mW filter-free stereo digital amplifiers for stereo speakers and two 50mW stereo digital am...

Microchip Ex. 1062, p. 12
Microchip v. Aptiv
IPR2024-00230

More

Structured-ASIC Prototyping

(01/08/2006)

ChipX announced a development kit for its CX6100 family of structured ASICs, integrating the same PCI Express (PCIe) PHY as that used in the CX6100 with a PCIe development board and FPGA. The kit allows developers to design and verify their initial PCIe prototype with the same PH... More

Gate Array In Tiny WCSP

(01/06/2006)

The small-scale gate array products in the S1L50000 series do not only boast smaller package sizes, but also offer a large range of products featuring a diverse set of gate numbers. All these new products (core voltage: 3.3 V, I/O voltage: 5 V, current consumption: 0.7 µW/MHz/BC,... More

QDR-II Dual-Port Interfaces

(01/06/2006)

Dual-port devices are used to facilitate communications between multiple processors by way of two ports integrating memory and logic control, which gives the processors simultaneous access to a common central memory. The IDT QDR-II dual-port devices are available in both 9Mbit (7... More

Digital-Audio-Codec Processor

(01/06/2006)

The PSM715 is a digital integrated codec amplifier combined with a high-performance sound processor for mobile applications. It supports up to 1.4W in parallel mono speaker drive mode, up to 800mW+800mW filter-free stereo digital amplifiers for the speakers, up to 100mW mono digi... More

Embedded Flash Enables New Sensor-Interface Applications in Vehicles

(01/05/2006)

The increase in electronic content in passenger vehicles continues apace. New features and systems relating to vehicle safety, comfort and convenience, as well as powertrain, are being developed and implemented as quickly as possible by major car manufacturers. In a hugely compet... More

Embedded LCD Controller

(01/05/2006)

The S1D13513 is a colour LCD/TV graphics controller with an external SDRAM memory interface and supports a wide range of CPUs and displays. The architecture is designed to meet the low-cost, low-power requirements of embeddedsystem markets in the low- to mid-end segment such as m... More

Multi-Gbit/s SerDes PHY

(01/04/2006)

Small fabless company Ansem now delivers analogue IP in standard 90nm TSMC technology. As a promising development, the company customdesigned a 2.5 to 3.125Gbit/s multi-standard (SONET, XAUI and Rapid I/O) SerDes PHY, for use in Kawasaki Microelectronics' advanced-communication A... More

Integrated SoC Solution

(01/04/2006)

Segger GmbH's embOS real-time operating system (RTOS) is now available for NEC Electronics' System-on-Chip Lite+, ARM7TDMI-based customisable microcontroller and System-on-Chip design platform. The real-time kernel is well-suited for resource-constrained embedded designs, and tog... More

Embeddable FPGA Cores

(01/04/2006)

A solution for IC designers who need an embedded FPGA (eFPGA) macro in their ASIC or SoC design, the Menta eFPGA core is a customisable, domain-specific reconfigurable core that can be integrated into any design by three different means: inside a general-purpose processor; connec... More

Cached DSP Cores

(01/04/2006)

The ZSP410, ZSP520 and ZSP560 licensable DSP cores feature cached memory and provide designers with greater levels of flexibility in choosing how to distribute instructions and data between on-chip and external memory. This enables the implementation of more robust ASIC and SoC d... More

ASIC-Prototyping Platform

(01/04/2006)

The HAPS-31 and HAPS-32 Virtex-4 platforms open up advanced ASIC prototyping to smaller designs. Before their integration into a larger design, the boards make it very cost-effective to work on small projects. Both products are part of the lego-like HapsTrak connection system whi... More

Tools And IP Package

(01/04/2006)

The Teja FP Platform is a complete package for implementing packet-processing designs in software on FPGAs with multiple embedded processors. The platform includes pre-designed multi-processor fabric components plus other IP elements that are easily assembled, configured, and man... More

Driving Medical-Device Innovation

(01/04/2006)

Today, facing clinical demand for much faster progress, medical-device designers are drawing on innovations in numerous fields to improve the diagnostic, monitoring and therapeutic capabilities of next-generation devices. These innovations can improve treatment and care for milli... More

Optical Modulator Driver

(01/02/2006)

The TGA4953-SCC-SL optical modulator driver has been designed primarily for applications in OC-192 high-speed fibre-optic communication systems. The MSA-compliant device consists of two wideband amplifiers combined with off-chip circuitry, all assembled into a surface-mount packa... More

Page 1 2 3 4 to approx 4

Microchip Ex. 1062, p. 13
Microchip v. Aptiv
IPR2024-00230

Search in the archives

Insert keyword(s) or reference

Year | Month | GO | Advanced Search Criteria

About EPN | Terms and conditions | Privacy policy | Contact us | Media information 2007

Copyright RBI 2005. EPN is a trademark of Reed Business Information

Our group proposes on-line information covering the following topics

Business to Business
Business Directory
Social care - Director of social institutes
Electronics : Products - Design - Components
Corporate Publishing
Finance

Business to Consumer
Legal - Legal
Marketing - Communication - Medias
Management - Personal and professional development
HR - Training - Education
On-line invitations to tender - Data services
Health

Home | Products | Suppliers by company / by product type | Events | Subscription to Datasheet / to Magazine

EPN Online proposes a technical database about discrete semiconductors components, connectors, electromechanical components, sensors and transducers, passive electronic components and provides news about electronics design and actuality of electronics suppliers

https://web.archive.org/web/20111112082401/http://www.epn-online.com:80/page/36489/usb-in-automotive-----no-longer-just-for-pcs.html

INTERNET ARCHIVE WayBackMachine
http://www.epn-online.com/page/36489/usb-in-automotive-----no-longer-just-for-pcs.html Go
2 captures
12 Nov 2011 - 13 Dec 2011
OCT 2010 NOV 12 2011 DEC 2012
About this capture

TOP PRODUCTS

Product group : Digital ICs
Product Sub-group : ASICs, ASSPs and Gate Arrays

USB In Automotive: No Longer Just For PCs

Media inside the automobile...

Universal Serial Bus (USB) has long been the ubiquitous standard for PC peripheral connectivity, but recently it has started venturing into the automotive market. MP3-supported stereos, DVD players and advanced GPS navigation systems are all part of infotainment automotive electronics. Equipping our cars with these high-tech gadgets requires a sophisticated, yet simple, form of communication.

Reference: 18896

01/09/2006

Media inside the automobile has followed in the footsteps of consumer electronics. From eight-track players to cassettes to CDs, it's clear that MP3 is next in line. Well over 150 million consumers have an iPod or MP3-equivalent, and FM transmitters and factory-installed iPod docks are simply a band-aid until stereos incorporate direct connections. Infotainment also includes touch-screen navigation equipment, fold-down video screens and mobile-phone speaker systems: suddenly the car has become a PC on wheels. As more portable consumer electronics interface with infotainment units, a standard form of connectivity is needed that can work with nearly all devices. This same dilemma existed in the PC market over ten years ago, which led to the birth of USB. The automotive industry does not need to reinvent the wheel: nearly all consumer electronics are PC-dependent for some form of functionality (downloading MP3s, uploading pictures, etc.), and the connection most widely used is USB - so the automotive industry already has a universal standard to take advantage of.

Infotainment design using USB

To utilise USB inside the automobile, either the portable consumer device or the infotainment system must contain a USB host to control the flow of data. The USB host in these devices is not the typical host controller in your PC, but rather an optimised ASIC or embedded host IC targeted for portable consumer electronics. High-end infotainment systems (advanced GPS navigation, full-featured stereos) often contain an ASIC customised to perform some dedicated function. Since these ASICs are typically built from IP libraries, they often integrate USB host IP to support USB peripherals. Simpler systems (basic stereos, mobile phone docks) do not require as much processing power and may choose to use a very basic ASIC or an embedded microprocessor. In these cases, a USB host can be added using a discrete embedded host IC. Using such an embedded host allows the ASIC to slim down its feature set to save space and cost, while still supporting USB. A discrete embedded host can also allow quicker time-to-market. Whether a designer chooses to use an integrated or a discrete solution, all USB hosts require a host stack. The latter is essentially the brains to the host controller, enabling all USB functionality inside a consumer application. A typical host stack contains the application-programming interface, a real-time operating system and core USB drivers. When designing a USB host into an infotainment system, the application and usage model will define the necessary bandwidth requirements. For most automotive applications, full-speed USB (12 Mbps) is sufficient. For example, the average MP3 is compressed between 128 and 192Kbps, with the highest quality MP3 pushing 320Kbps, well below the 12Mbps full-speed USB can support. Even uncompressed WAV files stream from a CD transfer at a maximum data rate of 1.5Mbps, which again falls well into the range of full-speed USB. High-speed USB (480Mbps) should only be considered if the system has 1GByte or above of on-board stororage or streams high-resolution video.Automotive infotainment systems must be prepared to operate in the most extreme temperatures. To ensure proper functionality of all automotive devices in all conditions, the Automotive Electronics Council (AEC) has defined a specification known as the AEC Q100, which calls for automotive components to operate in a temperature range from -40 to +150°C, with varying grades in between. Certain car manufacturers may require all components in an infotainment system to comply with a certain grade outlined in the AEC Q100 specifications.

The USB solution

With many specifications and requirements to consider, choosing the right USB solution can be a challenge. Cypress Semiconductor's EZ-Host (CY7C67300) embedded host solution is an AEC-qualified device with whole product support. Combined with the CY4645 reference design, Cypress thus provides a turn-key solution that allows quick time-to-market and easy customisation for all infotainment platforms. Complete firmware, schematics, host stacks and documentation put control in the designer's hands.

Cypress Semiconductor
3901 North First Street
PO Box 649079
95164-9079 San Jose - USA -California
tel: +1 408 943 2600
fax: +1 408 943 2796

Company website

RELATED ARTICLES FROM Cypress Semiconductor all
- Design Tool For PSoC (28/08/2007)

RELATED ARTICLES all
- Two Non-Magnetic TVS Arrays (24/10/2011)
- Automotive-Qualified FPGAs (22/04/2010)
- Super-resolution ASSP supports LVDS interface (25/02/2010)
- CSSPs in HSDPA USB Modems (28/01/2010)
- Security modules feature multiple interfaces (24/12/2009)

back to top

Search in the archives Insert keyword(s) or reference
Year Month GO Advanced Search Criteria

About EPN | Terms and Conditions | Privacy policy | Contact us | Media information | Distiblog

EPN Magazine issue Nov. 2011 Sample issue
Free! Subscribe now!
EPN blog network
EPNdistiblog
IndustrialAutomation
RenewableEnergy
AutomotiveElectronics
RF&Wireless

EPN Online proposes a technical database about discrete semiconductors components, connectors, electromechanical components, sensors and transducers, passive electronic components and provides news about electronics design and actuality of electronics suppliers

Copyright RBI 2011. EPN is a trademark of Reed Business Information

Microchip Ex. 1062, p. 17
Microchip v. Aptiv
IPR2024-00230

https://web.archive.org/web/20111213225946/http://www.epn-online.com/page/36489/usb-in-automotive-----no-longer-just-for-pcs.html

INTERNET ARCHIVE WayBackMachine
http://www.epn-online.com/page/36489/usb-in-automotive-----no-longer-just-for-pcs.html Go
2 captures
12 Nov 2011 - 13 Dec 2011
NOV DEC 13 JAN
2010 2011 2012
About this capture

TOP PRODUCTS

Print | Digg This | Slashdot It! | Add to Del.icio.us |

Product group : Digital ICs
Product Sub-group : ASICs, ASSPs and Gate Arrays

USB In Automotive: No Longer Just For PCs

Media inside the automobile...

Universal Serial Bus (USB) has long been the ubiquitous standard for PC peripheral connectivity, but recently it has started venturing into the automotive market. MP3-supported stereos, DVD players and advanced GPS navigation systems are all part of infotainment automotive electronics. Equipping our cars with these high-tech gadgets requires a sophisticated, yet simple, form of communication.

Reference: 18896

01/09/2006

Media inside the automobile has followed in the footsteps of consumer electronics. From eight-track players to cassettes to CDs, it's clear that MP3 is next in line. Well over 150 million consumers have an iPod or MP3-equivalent, and FM transmitters and factory-installed iPod docks are simply a band-aid until stereos incorporate direct connections. Infotainment also includes touch-screen navigation equipment, fold-down video screens and mobile-phone speaker systems: suddenly the car has become a PC on wheels. As more portable consumer electronics interface with infotainment units, a standard form of connectivity is needed that can work with nearly all devices. This same dilemma existed in the PC market over ten years ago, which led to the birth of USB. The automotive industry does not need to reinvent the wheel: nearly all consumer electronics are PC-dependent for some form of functionality (downloading MP3s, uploading pictures, etc.), and the connection most widely used is USB - so the automotive industry already has a universal standard to take advantage of.

Infotainment design using USB

To utilise USB inside the automobile, either the portable consumer device or the infotainment system must contain a USB host to control the flow of data. The USB host in these devices is not the typical host controller in your PC, but rather an optimised ASIC or embedded host IC targeted for portable consumer electronics. High-end infotainment systems (advanced GPS navigation, full-featured stereos) often contain an ASIC customised to perform some dedicated function. Since these ASICs are typically built from IP libraries, they often integrate USB host IP to support USB peripherals. Simpler systems (basic stereos, mobile phone docks) do not require as much processing power and may choose to use a very basic ASIC or an embedded microprocessor. In these cases, a USB host can be added using a discrete embedded host IC. Using such an embedded host allows the ASIC to slim down its feature set to save space and cost, while still supporting USB. A discrete embedded host can also allow quicker time-to-market. Whether a designer chooses to use an integrated or a discrete solution, all USB hosts require a host stack. The latter is essentially the brains to the host controller, enabling all USB functionality inside a consumer application. A typical host stack contains the application-programming interface, a real-time operating system and core USB drivers. When designing a USB host into an infotainment system, the application and usage model will define the necessary bandwidth requirements. For most automotive applications, full-speed USB (12 Mbps) is sufficient. For example, the average MP3 is compressed between 128 and 192Kbps, with the highest quality MP3 pushing 320Kbps, well below the 12Mbps full-speed USB can support. Even uncompressed WAV files stream from a CD transfer at a maximum data rate of 1.5Mbps, which again falls well into the range of full-speed USB. High-speed USB (480Mbps) should only be considered if the system has 1GByte or above of on-board stororage or streams high-resolution video.Automotive infotainment systems must be prepared to operate in the most extreme temperatures. To ensure proper functionality of all automotive devices in all conditions, the Automotive Electronics Council (AEC) has defined a specification known as the AEC Q100, which calls for automotive components to operate in a temperature range from -40 to +150°C, with varying grades in between. Certain car manufacturers may require all components in an infotainment system to comply with a certain grade outlined in the AEC Q100 specifications.

The USB solution

With many specifications and requirements to consider, choosing the right USB solution can be a challenge. Cypress Semiconductor's EZ-Host (CY7C67300) embedded host solution is an AEC-qualified device with whole product support. Combined with the CY4645 reference design, Cypress thus provides a turn-key solution that allows quick time-to-market and easy customisation for all infotainment platforms. Complete firmware, schematics, host stacks and documentation put control in the designer's hands.

Cypress Semiconductor
3901 North First Street
PO Box 649079
95164-9079 San Jose - USA -California
tel: +1 408 943 2600
fax: +1 408 943 2796

Company website

RELATED ARTICLES FROM Cypress Semiconductor all

- Design Tool For PSoC (28/08/2007)

RELATED ARTICLES all

- Two Non-Magnetic TVS Arrays (24/10/2011)
- Automotive-Qualified FPGAs (22/04/2010)
- Super-resolution ASSP supports LVDS interface (25/02/2010)
- CSSPs in HSDPA USB Modems (28/01/2010)
- Security modules feature multiple interfaces (24/12/2009)

back to top

Search in the archives Insert keyword(s) or reference
Year Month GO Advanced Search Criteria

About EPN | Terms and Conditions | Privacy policy | Contact us | Media information | Distiblog

EPN Magazine issue Dec. 2011 Sample issue
Free! Subscribe now!

EPN blog network
EPNdistiblog
IndustrialAutomation
RenewableEnergy
AutomotiveElectronics
RF&Wireless

EPN Online proposes a technical database about discrete semiconductors components, connectors, electromechanical components, sensors and transducers, passive electronic components and provides news about electronics design and actuality of electronics suppliers

Copyright RBI 2011. EPN is a trademark of Reed Business Information

https://web.archive.org/web/20120707153447/http://www.cypress.com/?rID=14608

INTERNET ARCHIVE WayBackMachine
http://www.cypress.com/?rID=14608 Go
5 captures
7 Jul 2012 - 29 Mar 2015
JUN JUL MAR
07
2011 2012 2015
About this capture

USB In Automotive- Not Just For PCs Anymore

Last Updated: 11/13/2008

Universal Serial Bus (USB) has long been the ubiquitous standard for PC peripheral connectivity, but recently USB has started venturing into the automotive market. MP3-supported stereos, DVD players and advanced GPS navigation systems are all part of "infotainment" automotive electronics designed to provide "information" and "entertainment" to passengers. Equipping our cars with these high-tech gadgets requires a sophisticated, yet simple, form of communication - a role USB has been performing its whole life. To read more about this article, click the download link or go to EPN.

Related Files

File Title	Language	File Size	Last Updated
Embedded Host in Automotive.pdf	English	19 KB	02/26/2009
USB In Automotive Not Just For PCs Anymore.pdf	Korean	889 KB	02/26/2009
Embedded Host in Automotive_v3_J.pdf	Japanese	247 KB	02/26/2009
USB e Automotive qualcosa di pi.pdf	Italian	629 KB	02/26/2009
USB jetzt auch im Auto_Dec. 06.pdf	German	159 KB	02/26/2009
L'USB dans l'automobile pas seulement pour les ordinateurs.pdf	French	49 KB	02/26/2009

Need help? Ask a question and find answers in the Cypress Developer Community Forums.

Low/intermittent bandwidth users tip: Firefox and Chrome browsers will allow downloads to be resumed if your connection is lost during download.

Rate Technical Ar..

Be the first to rate

Related Pages

Automotive
EZ-Host™
USB Hi-Speed Peripherals

Share

Tweet
Digg
SHARE

© 2012 Cypress Semiconductor Corporation. All rights reserved.
Twitter1.png

Microchip Ex. 1062, p. 22
Microchip v. Aptiv
IPR2024-00230

https://web.archive.org/web/20001021112224/http://www.netchip.com/library/datasheet.htm

INTERNET ARCHIVE WayBackMachine http://www.netchip.com/library/datasheet.htm Go SEP OCT DEC 21 1999 2000 2002 About this capture
25 captures
21 Oct 2000 - 14 Dec 2005

To download a document, point at the hyperlink, right click on the mouse, and then choose "Save Target As" or "Save Link As". If you still can't download, please contact support@netchip.com.

NET1080:	NET1080 Specification Rev 0.6
NET1031:	ScanUSB - Single-Chip USB Scanner Controller Rev 1.0
NET2888:	TurboUSB - USB Interface Controller Specification. Rev 3.0
NET2890:	USB Programmable Interface Controller Specification Rev 2.0 Draft 9

Microchip Ex. 1062, p. 24
Microchip v. Aptiv
IPR2024-00230

INTERNET ARCHIVE WayBackMachine http://www.netchip.com/products/turboconnect.htm Go MAY JUN 19 AUG 1999 2000 2001 About this capture
52 captures
19 Jun 2000 - 27 Feb 2021

Overview
Key Features and Benefits
Standard Specifications

TurboCONNECT Reference Design

Overview

Complete Turnkey Reference Design with NetChip's NET1080 and device drivers.

TurboCONNECT is a turnkey Reference Design Kit that comes complete with documentation, bill of materials, schematics, and device drivers. OEMs can take it to manufacturing directly without spending any time in hardware and software development.

TurboCONNECT lets you offer a quick and easy solution for host to host communications at turbo speed equivalent to an Ethernet 10BT connection. Users can now network two or more Universal Serial Bus (USB) computers through standard Plug & Play technology without adding network cards.

With TurboCONNECT, two or more USB computers can share programs, files, peripheral equipment, and more. The product is perfect for small offices, home users, multi-player gaming, or business people who take their work home or on the road. They can work on their notebook PC, then connect it to a desktop PC via TurboCONNECT, and transfer files.

The standard TurboCONNECT includes two USB upstream connectors and allows the connected PCs to be separated by up to 10 meters for flexible placement.

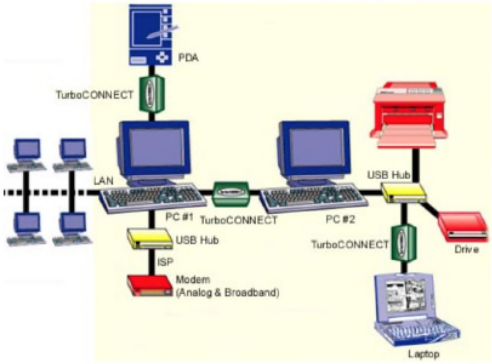

Back to Top

Key Features and Benefits:

- Up to 12Mbps data transfer rate
- Full NDIS implementation
- Multiple network nodes supported
- Plug & Play compatible
- LED's for status and activity
- OEM software and hardware customization

Standard Specifications:

- Operating Environment: Windows98, Windows CE, and Windows 2000
- OCHI and UCHI compatible
- Ports: Two upstream, USB type B receptacle
- Compliance: FCC Class B, USB specification v1.0 and v1.1
- Power Supply: Powered from USB bus, no external supply required
- Power Management: Suspend current reduces to <500 µa
- Dimensions: 0.5"H x 1.0"W x 2.13"L

For more information on the TurboCONNECT Reference design, please contact *NetChip*.

Back to Top

Microchip Ex. 1062, p. 26
Microchip v. Aptiv
IPR2024-00230

EXHIBIT B

Folder 001

NetChip
Technology, Inc.
335 Pioneer Way
Mt View, California 94041
(650) 526-1490 Fax (650) 526-1494
e-mail: sales@netchip.com
Internet: www.netchip.com

NET1080 USB TurboCONNECT PRELIMINARY SPECIFICATION

For Revision 2 IC

Doc #: 605-1080-0206
Revision: 0.6
Date: 1/31/00

Microchip Ex. 1062, p. 28
Microchip v. Aptiv
IPR2024-00230

This document contains material that is confidential to NetChip. Reproduction without the express written consent of NetChip is prohibited. All reasonable attempts were made to ensure the contents of this document are accurate; however no liability, expressed or implied is guaranteed. NetChip reserves the right to modify this document, without notification, at any time.

Revision History

Revision	Issue Date	Comments
0.1	February 16, 1999	NET1080 Initial Draft Specification Proposal
0.2	April 22, 1999	New Updates
0.3	May 4, 1999	Register, Pin Changes
0.4	June 23, 1999	Pin Changes
0.5	November 8, 1999	Additional Pin Changes, Typo Fixes
0.6	January 31, 2000	Removing I2C EEPROM section

©NetChip Technology, Inc., 1999
335 Pioneer Way, Mountain View, California 94041
TEL (650) 526-1490 FAX (650) 526-1494
http://www.netchip.com

Microchip Ex. 1062, p. 29
Microchip v. Aptiv
IPR2024-00230

NET1080 USB TurboCONNECT

1 Highlights 5
1.1 Introduction 5
1.2 Features 5
1.2.1 General Features 5
1.2.2 USB Features 5
1.3 Overview 5
1.4 NET1080 Block Diagram 6
1.5 NET1080 System Block Diagram 6
Changes from Rev 1 to Rev 2 6
Changes from Rev 1 to Rev 2 7
2 Pin Connection Diagram 8
3 Pin Description 9
3.1 Table 3-1: Pin Types 9
3.2 Table 3-2: Pin Descriptions 9
4 Functional Description 12
4.1 Start-Up 12
4.1.1 Reading from Initialization Device 12
4.1.2 Enumeration and Configuration by the Host PC 12
4.2 Initialization Interface 12
4.2.1 MicroWire EEPROMs 12
4.3 USB Interface 14
4.3.1 Default Control Endpoint (Endpoint 00h) 14
4.3.2 Data OUT Endpoint (Endpoint 01h) 14
4.3.3 Data IN Endpoint (Endpoint 81h) 14
4.3.4 Mailbox OUT Endpoint (Endpoint 02h) 14
4.3.5 Mailbox IN Endpoint (Endpoint 82h) 14
4.3.6 Status Endpoint (Endpoint 83h) 14
4.4 Suspend Mode 14
4.5 Root Port Reset 15
4.6 NET1080 Power Configuration 15
5 Register Descriptions 16
USB Register Description 16
5.1.1 USB Register Summary 16
5.1.2 (Address 0h; MFGID) Manufacturer ID 16
5.1.3 (Address 1h; PRODID) Product ID 16
5.1.4 (Address 2h; RELNUM) Release Number 17
5.1.5 (Address 3h; MAXPWR) Maximum Power 17
5.1.6 (Address 4h; USBCTL) USB Control Register 18
5.1.7 (Address 5h; INTPOLL) Interrupt Polling Interval Register 18
5.1.8 (Address 6h; STRINDEX1) String Index 1 19
5.1.9 (Address 7h; STRINDEX2) String Index 2 19
5.1.10 (Address 10h; TTL) Time to Live 19
5.1.11 (Address 11h; STATUS) Status 19
5.1.12 (Address 1Fh; CHIPREV) NET1080 Silicon Revision 20
6 USB Vendor-Specific Device Requests (Endpoint 0) 21
6.1 Register Write 21
6.2 Register Read 21
6.3 EEPROM Write 22
6.4 EEPROM Read 22
6.5 Manufacturer Test Mode 23

©NetChip Technology, Inc., 1999
335 Pioneer Way, Mountain View, California 94041
TEL (650) 526-1490 FAX (650) 526-1494
http://www.netchip.com
Revision 0.5, November 8, 1999

Microchip Ex. 1062, p. 30
Microchip v. Aptiv
IPR2024-00230

6.5.1 Device Clear Feature (Timing Test Mode) 23
6.5.2 Device Set Feature (Timing Test Mode) 23
7 USB Standard Device Requests (Endpoint 0) 24
7.1 Control Read Transfers 24
7.1.1 Get Device Status 24
7.1.2 Get Interface Status 24
7.1.3 Get Endpoint 00h, 01h, 81h, 02h, 82h, 83h, 84h Status 24
7.1.4 Get Device Descriptor (18 Bytes) 24
7.1.5 Get Configuration Descriptor (53 bytes) 25
7.1.6 Get String Descriptor 0 27
7.1.7 Get String Descriptor 1 27
7.1.8 Get String Descriptor 2 27
7.1.9 Get String Descriptor 3 27
7.1.10 Get Configuration 28
7.1.11 Get Interface 28
7.1.12 Set Address 28
7.2 Control Write Transfers 28
7.2.1 Set Configuration 28
7.2.2 Set Interface 28
7.2.3 Device Clear Feature 28
7.2.4 Device Set Feature 28
7.2.5 Endpoint Clear Feature 29
7.2.6 Endpoint Set Feature 29
8 Bulk and Interrupt Endpoints 30
8.1 Endpoint 01h ‘OUT’ Transactions (Data Out Pipe) 30
8.2 Endpoint 81h ‘IN’ Transactions (Data In Pipe) 30
8.3 Endpoint 02h ‘OUT’ Transactions (Mailbox Out Pipe) 30
8.4 Endpoint 82h ‘IN’ Transactions (Mailbox In Pipe) 30
8.5 Endpoint 83h ‘IN’ Transactions (Status Input Pipe) 30
9 Electrical Specifications 31
9.1 Absolute Maximum Ratings 31
9.2 Recommended Operating Conditions 31
9.3 DC Specifications 31
9.3.1 DC Specifications 31
9.3.2 USB Port DC Specifications 32
9.3.3 USB Port AC Specifications 32
9.3.4 USB Port AC/DC Specification Notes 33
9.3.5 USB Port AC Waveforms 33
10 Mechanical Drawing 35

©NetChip Technology, Inc., 1999
335 Pioneer Way, Mountain View, California 94041
TEL (650) 526-1490 FAX (650) 526-1494
http://www.netchip.com
Revision 0.5, November 8, 1999

Microchip Ex. 1062, p. 31
Microchip v. Aptiv
IPR2024-00230

1 Highlights

1.1 Introduction

The NetChip USB TurboCONNECT provides a single chip solution for connecting two USB Hosts. No external microprocessor is needed. The Netchip USB TurboCONNECT offers a quick and easy solution for host-to-host communications at speed equivalent to an Ethernet 10BT connection. Users can now network two or more Universal Serial Bus (USB) computers through standard Plug & Play technology without adding network cards.

1.2 Features

1.2.1 General Features

- Single-Chip USB Host-to-Host Connection
- Low Power CMOS in 48-pin PQFP Package
- Supports 100 mA low power USB Specification
- Supports 500 µA suspend current USB Specification
- 6 MHz crystal oscillator with internal PLL.
- MicroWire™ EEPROM interface
- Data transfer rate of 5 Mbps or greater
- 256 Byte FIFO per direction for data transfer
- Automatic retry of failed packets
- Low latency packet forwarding (minimum of 2.6 microseconds)

1.2.2 USB Features

- USB Specification Version 1.1 Compliant
- Supports Full-Speed USB Bandwidth of 12 Mbps
- Status Reporting through USB Interrupt Endpoints

1.3 Overview

The NET1080 USB TurboCONNECT allows two Hosts to communicate with each other simultaneously. It consists of two SIEs to interface to two Hosts, bi-directional FIFOs, and an EEPROM interface. The EEPROM interface is provided to initialize the NET1080 with parameters necessary for enumeration of the device. Parameters loaded from the serial device include the Manufacturer ID, Product ID, Revision Number, Maximum Power fields, and USB control bits, as well as optional string descriptors. For maximum data throughput, the NET1080 provides a 256 byte FIFO per direction for data transfer. Other endpoints that are provided are a pair of CONTROL endpoints that support the USB standard requests and vendor specific requests, a pair of status endpoints that report the number of bytes in the next available packet. The NET1080 has the capability to enter low-power suspend as required by the USB specification. When enabled, it can perform a device remote wakeup on either port when data becomes available.

©NetChip Technology, Inc., 1999
335 Pioneer Way, Mountain View, California 94041
TEL (650) 526-1490 FAX (650) 526-1494
http://www.netchip.com
Revision 0.5, November 8, 1999

Microchip Ex. 1062, p. 32
Microchip v. Aptiv
IPR2024-00230

1.4 NET1080 Block Diagram

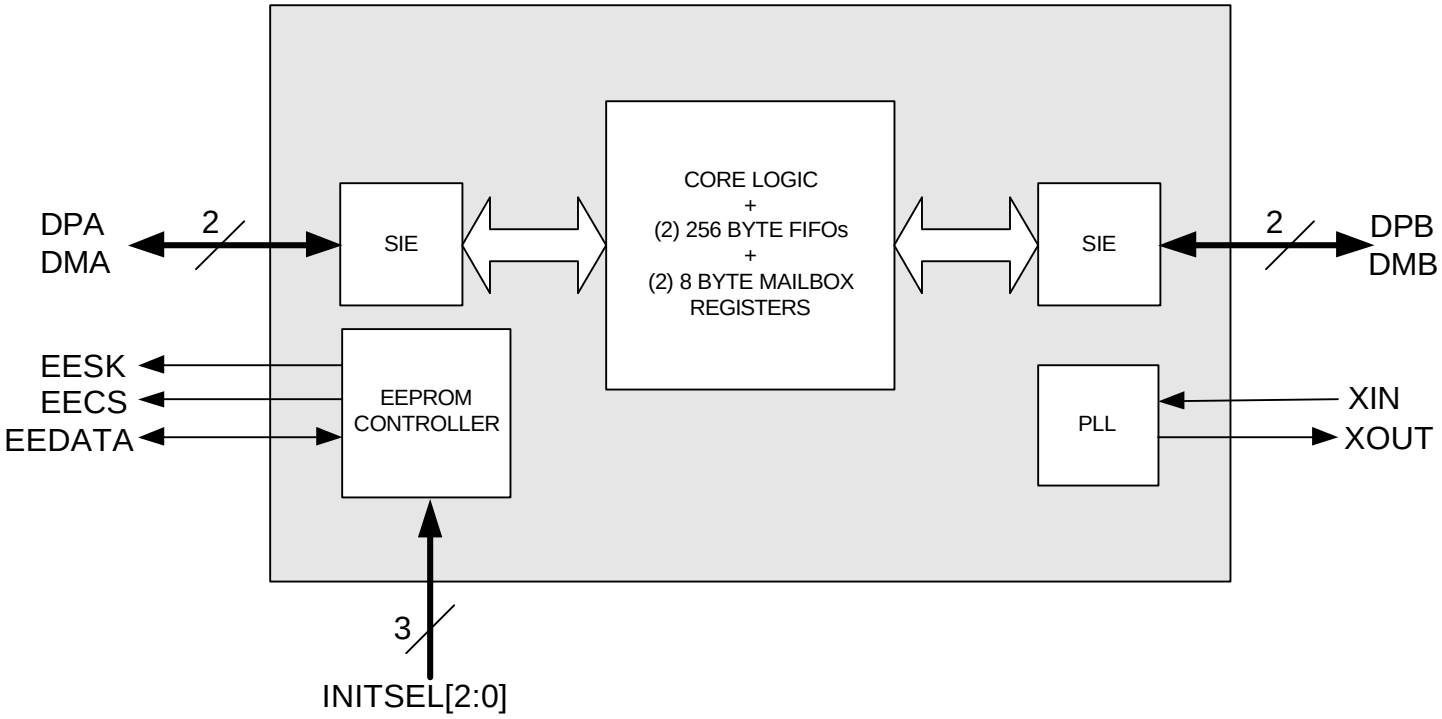

1.5 NET1080 System Block Diagram

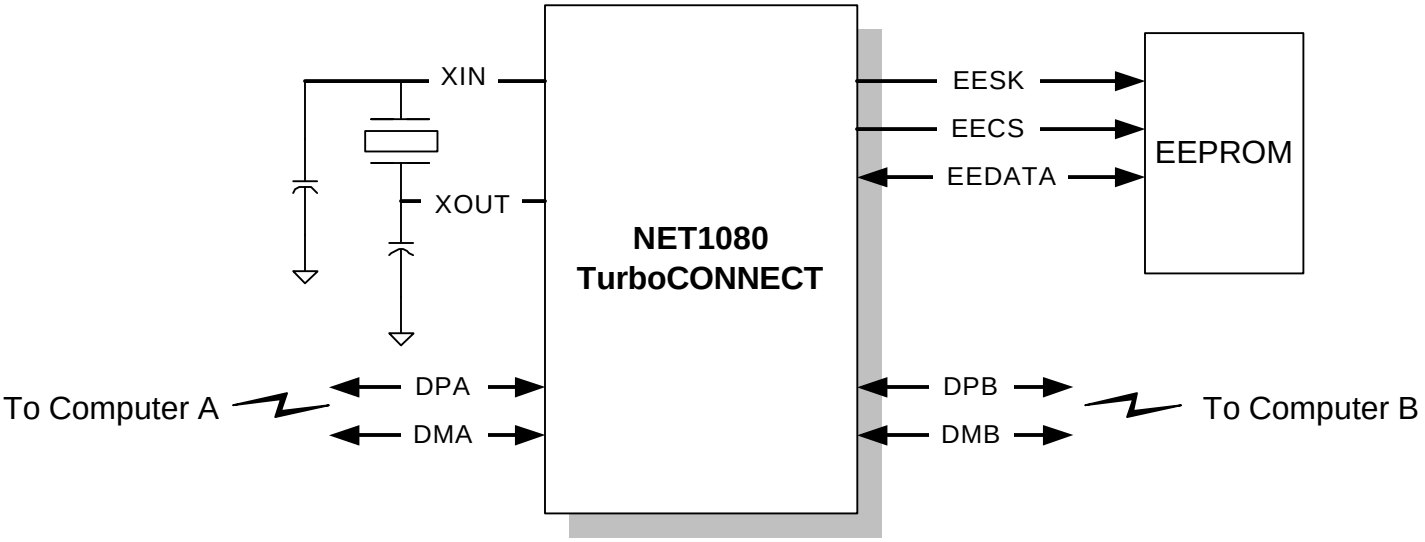

©NetChipTechnology, Inc., 1999
335 Pioneer Way, Mountain View, California 94041
TEL (650) 526-1490 FAX (650) 526-1494
http://www.netchip.com
Revision 0.5, November 8, 1999

Microchip Ex. 1062, p. 33
Microchip v. Aptiv
IPR2024-00230

Changes from Rev 1 to Rev 2

The following changes were made to the NET1080 from Revision 1 to Revision 2:

1. Power Control: Revision 1 derives power only from the A port if both ports are powered. Revision 2 derives power from both ports unless one port is suspended, in which case it derives power from the other port.
2. OUT NAKs when other port is disconnected (erratum 630-0102-0103): Revision 1 NAKs OUT packets if the other port is disconnected causing packets to back up in the host driver. Revision 2 accepts (ACKs) packets if the other side is disconnected, but silently discards the packets.
3. Fixed Get Status failures on endpoints 1, 2, 82, and 83 (erratum 630-0102-0101).
4. Fixed Non-endpoint 0 traffic interfering with control protocol (erratum 630-0102-0102).
5. Changed LED algorithm to flash on for 255 milliseconds when CONFIGURED, and flash on for 32 milliseconds when data is transferred to the other port.
6. Added TTL_LED for each port. TTL_LED flashes on for 32 milliseconds whenever a packet on the port is discarded due to Time-To-Live expiration.

©NetChip Technology, Inc., 1999
335 Pioneer Way, Mountain View, California 94041
TEL (650) 526-1490 FAX (650) 526-1494
http://www.netchip.com
Revision 0.5, November 8, 1999

Microchip Ex. 1062, p. 34
Microchip v. Aptiv
IPR2024-00230

2 Pin Connection Diagram

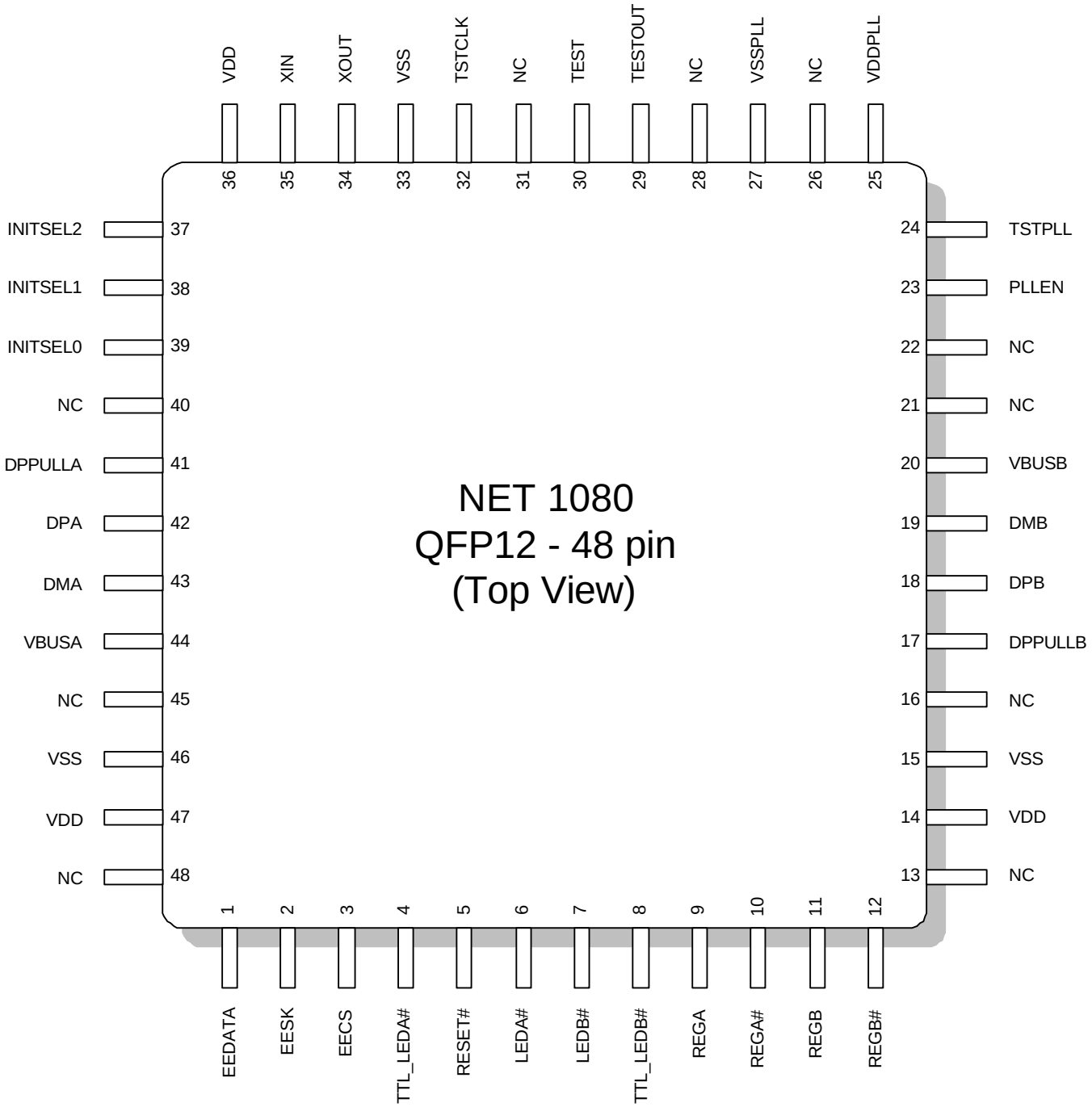

.

©NetChip Technology, Inc., 1999
335 Pioneer Way, Mountain View, California 94041
TEL (650) 526-1490 FAX (650) 526-1494
http://www.netchip.com
Revision 0.5, November 8, 1999

Microchip Ex. 1062, p. 35
Microchip v. Aptiv
IPR2024-00230

3 Pin Description

3.1 Table 3-1: Pin Types

Pin Type	Description
I	Input
O	Output
I/O	Bi-Directional (with Tri-State)
S	Schmitt Trigger
TS	Tri-State
TP	Totem Pole
OD	Open Drain
PD1	50KΩ Internal Pull-Down Resistor
PU1	50KΩ Internal Pull-Up Resistor
PD2	100KΩ Internal Pull-Down Resistor
PU2	100KΩ Internal Pull-Up Resistor
#	Active Low

3.2 Table 3-2: Pin Descriptions

Signal Name	Pin	Type	Description
EECS (MicroWire)	3	O, TP, 2mA	EEPROM Chip Select
EESK (MicroWire)	2	O, TP, 2mA	EEPROM Clock
EEDATA (MicroWire)	1	I/O, TS, S, 2mA, PU2	EEPROM Read/Write
INITSEL0	39	I	Initialization Select Bit 0. Select source of register initialization data.
INITSEL1	38	I	Initialization Select Bit 1. Select source of register initialization data.
INITSEL2	37	I	Initialization Select Bit 2. Select source of register initialization data. Bit 2 1 0 Source - - ---------- 0 0 0 MicroWire EEPROM (93CS46, 93CS06) 0 0 1 MicroWire EEPROM (93CS56, 93CS66) 0 1 0 Reserved 0 1 1 Reserved 1 0 0 Reserved 1 0 1 Reserved 1 1 0 Reserved 1 1 1 Reserved
RESET#	5	I, S, PU1	Reset. Connect to power-on reset.
DMA	43	I/O	**USB Data Port A**. DPA and DMA are differential data signals of the USB data port A. A 27 ohm series resistor between DMA and the USB connector is required to meet the USB impedance requirements.

©NetChip Technology, Inc., 1999
335 Pioneer Way, Mountain View, California 94041
TEL (650) 526-1490 FAX (650) 526-1494
http://www.netchip.com
Revision 0.5, November 8, 1999

Microchip Ex. 1062, p. 36
Microchip v. Aptiv
IPR2024-00230

DPA	42	I/O	**USB Data Port A**. DPA and DMA are differential data signals of the USB data port A. An external 1.5 KΩ resistor must be connected from DPA to DPPULLA. This pull-up resistor indicates to the Host or upstream hub that a full-speed device is connected to the USB. A 27 ohm series resistor between DPA and the USB connector is required to meet the USB impedance requirements.
DMB	19	I/O	**USB Data Port B.** DPB and DMB are differential data signals of the USB data port B. A 27 ohm series resistor between DMB and the USB connector is required to meet the USB impedance requirements.
DPB	18	I/O	**USB Data Port B.** DPB and DMB are differential data signals of the USB data port B. An external 1.5 KΩ resistor must be connected from DPB to DPPULLB. This pull-up resistor indicates to the Host or upstream hub that a full-speed device is connected to the USB. A 27 ohm series resistor between DPB and the USB connector is required to meet the USB impedance requirements.
TESTOUT	29	O, TS	**Test Output.** For manufacturing test purposes. Leave unconnected.
TEST	30	I, PD1	**Test Mode.** Set to 0 or leave unconnected.
XIN	35	I	**6 MHz Oscillator Input.** Connect to 6 MHz crystal.
XOUT	34	O	**6 MHz Oscillator Output.** Connect to 6 MHz. The oscillator stops when the USB Host suspends the device.
TSTCLK	32	I, PD2	**PLL Test Clock**. Set to 0 or leave unconnected if the internal PLL is enabled. If the internal PLL is disabled, input an external 48 MHz signal.
TSTPLL	24	I, PD1	**PLL Test Enable**. For manufacturing test purposes. Set to 0 or leave unconnected.
PLLEN	23	I	**PLL Enable**. Set to 1 to enable the internal PLL. Set to 0 to disable the internal PLL. In this case, an external 48 MHz signal must be applied to the TSTCLK input.
VBUSA	44	I, PD2	**USB Port A power (+5V).**
VBUSB	20	I, PD2	**USB Port A power (+5V).**
DPPULLA	41	O, TS, 12 mA	**DPA Pull-up.** This active high output provides the VCC for the DPA pull-up resister.
DPPULLB	17	O, TS, 12 mA	**DPB Pull-up.** This active high output provides the VCC for the DPB pull-up resister.
LEDA#	6	O, TS, 12 mA, PU2	**LED A Control.** Active low output to control the A host side LED.
LEDB#	7	O, TS, 12 mA, PU2	**LED B Control.** Active low output to control the B host side LED.
TTL_LEDA#	4	O, TS, 12 mA, PU2	**Time-To-Live LED A Control.** Active low output to control the A host side TTL LED.
TTL_LEDB#	8	O, TS, 12 mA, PU2	**Time-To-Live LED B Control.** Active low output to control the B host side TTL LED.
REGA	9	O, OD, 6 mA	**Regulator A Control.** Active high open drain output to control the A host side regulator.
REGA#	10	O, TP, 6 mA	**Regulator A Control.** Active low output to control the A host side regulator.
REGB	11	O, OD, 6 mA	**Regulator B Control.** Active high open drain output to control the B host side regulator.
REGB#	12	O, TP, 6 mA	**Regulator B Control.** Active low output to control the B host side regulator.
VDDPLL	25	Pwr	**PLL Supply Voltage.** VDDPLL = 3.3V
VSSPLL	27	Gnd	**PLL Supply Voltage.** VSSPLL = GND

©NetChip Technology, Inc., 1999
335 Pioneer Way, Mountain View, California 94041
TEL (650) 526-1490 FAX (650) 526-1494
http://www.netchip.com
Revision 0.5, November 8, 1999

Microchip Ex. 1062, p. 37
Microchip v. Aptiv
IPR2024-00230

VDD	14,36,47	Pwr	**Supply Voltage.** VDD = 3.3 volts.
VSS	15,33,47	Gnd	**Ground.**
NC	13, 16, 21, 22, 26, 28, 31, 40, 45, 48	--	**No Connect.** Do not connect these pins.

©NetChip Technology, Inc., 1999
335 Pioneer Way, Mountain View, California 94041
TEL (650) 526-1490 FAX (650) 526-1494
http://www.netchip.com
Revision 0.5, November 8, 1999

Microchip Ex. 1062, p. 38
Microchip v. Aptiv
IPR2024-00230

4 Functional Description

4.1 Start-Up

Before the NET1080 is ready to transfer data between two USB Hosts, a sequence of operations must occur involving the NET1080, the USB driver, and the TurboCONNECT drivers. First, the NET1080 reads required USB parameters from the external serial memory device. Next, the USB driver must enumerate the NET1080 on both sides. Finally, the TurboCONNECT driver configures the NET1080 with the correct parameters.

4.1.1 Reading from Initialization Device

When the NET1080 first comes out of a reset applied at its RESET# input, it reads various parameters required by the USB Host from an external serial memory. The NET1080 generates all signals necessary to read the data from the serial memory. Until this data is read, the NET1080 will respond to Host requests for a configuration descriptor or device descriptor with a NAK. If no valid serial memory device is installed, then the default values are used.

4.1.2 Enumeration and Configuration by the Host PC

USB defines a set of descriptor requests that are part of the enumeration process. The NET1080 responds to these requests automatically. When enumeration is complete, control of the NET1080 is passed to the TurboCONNECT driver.
As part of the enumeration process, the USB Host issues a Get Device Descriptor request. The NET1080 responds with the descriptor shown in section 7.1.4. Some of the values, such as the Manufacturer ID and Product ID, may come from the optional serial EEPROM. This Manufacturer ID and Product ID allow the Host to associate the manufacturer-supplied TurboCONNECT driver with the NET1080. The TurboCONNECT driver then finishes initializing the NET1080.

4.2 Initialization Interface

The NET1080 initialization must be completed before the NET1080 will respond to the Device Descriptor requests from the Host. The table below lists the different values of the INITSEL bits that are used to select various EEPROMs.

INITSEL	Source
0	MicroWire™ EEPROM (93CS06, 93CS46)
1	MicroWire™ EEPROM(93CS56, 93CS66)
2-7	Reserved

4.2.1 MicroWire EEPROMs

The NET1080 supports initialization and read/write operations to the following MicroWire EEPROMs:

- 93C06L – 16 16-bit words (256 bits), CMOS, Low Voltage (2.7V to 4.5V)
- 93C46L – 64 16-bit words (1 Kbits), CMOS, Low Voltage (2.7V to 4.5V)
- 93C56L – 128 16-bit words (2 Kbits), CMOS, Low Voltage (2.7V to 4.5V)
- 93C66L – 256 16-bit words (4 Kbits), CMOS, Low Voltage (2.7V to 4.5V)

Each of these devices has a 4-wire MicroWire™ serial interface. The NET1080 supports a 3-wire implementation of this interface in which the EEPROM DI pin is connected to the NET1080 EEDATA pin, and the EEPROM DO pin is connected to the EEPROM EEDI pin through a 33 ohm resistor.

After reset is inactive, the INITSEL bits are sampled to determine the source of the initialization information. If INITSEL[2:0] is 0 or 1, the NET1080 will determine if a non-blank MicroWire EEPROM is connected. If no EEPROM is detected, or the device is blank (first word is FFFF), then the default register values will be reported to the Host PC.

©NetChip Technology, Inc., 1999
335 Pioneer Way, Mountain View, California 94041
TEL (650) 526-1490 FAX (650) 526-1494
http://www.netchip.com
Revision 0.5, November 8, 1999

Microchip Ex. 1062, p. 39
Microchip v. Aptiv
IPR2024-00230

Otherwise, the following required fields from Table 3-1 below are loaded into the NET1080 from the EEPROM. These required fields are reported in the Device and Configuration descriptors during USB device enumeration. Information must be stored in the EEPROM as 16-bit words. For string descriptors, bits 7:0 of an EEPROM word are returned to the Host first, followed by bits 15:8.

.

Table 4-1: Required MicroWire Serial EEPROM Fields

Word Index	Contents	Default Value
0	**Manufacturer ID**. This field is reported to the Host PC in the USB device descriptor's "Manufacturer ID" field during enumeration.	0525h
1	**Product ID**. This field is reported to the Host PC in the USB device descriptor's "Product ID" field during enumeration.	1080h
2	**Release Number.** This field is reported to the Host PC in the USB device descriptor's "Release Number" field during enumeration.	0200h
3	**Max Power.** This field is reported to the Host PC in the USB configuration descriptor's "Max Power" field during enumeration. It is reported in units of 2mA. This field should reflect the maximum current drawn by the TurboCONNECT from the USB power pins.	0032h
4	**USB Features.** This field contains several control bits that are reported to the Host PC in the USB device descriptor and configuration descriptor. See **USB Control Register** for details.	0013h
5	**Interrupt Polling Rate.** This field determines the rate at which the interrupt endpoints are polled by the Host.	0001h
6 (bits 15:8)	**Language ID String Start Index.**	0000h
6 (bits 7:0)	**Manufacturer String Start Index.**	0000h
7 (bits 15:8)	**Product String Start Index.**	0000h
7 (bits 7:0)	**Serial Number String Start Index.**	0000h

In addition, if any "String Enable" fields are set in the **USB Control Register**, the fields in Table 4-2 must be defined.

Table 4-2: Additional MicroWire Serial EEPROM Fields for String Descriptors

Word Index	Contents
8-9h	**Reserved.** Write these words as a zero.
Ah-FFh	**Available.** This range of the serial EPROM is available for defining string descriptors.

If no string descriptors are used, the EEPROM image may be as short as 8 words (to provide the required fields to the Host PC). With string descriptors, the EEPROM can end at the end of the last string descriptor's definition. Since the string start index fields are only 8-bits, the beginning address of the last string in the EEPROM can't have a starting word address greater than 255.

The MicroWire EEPROMs can also be accessed from either Host using Vendor Specific commands to endpoint 0. Only one 16-bit word can be read or written for each Vendor Specific command. See sections 6.3 and 6.4.

For an EEPROM write, the Host issues a Vendor Specific Host to Device request to endpoint 0. The EEPROM word location is passed in the wIndex field of the Setup packet, and the 16-bit write data is passed in the wValue field of the Setup packet. Further attempts to access the EEPROM result in a NAK handshake until the write cycle has completed.

For an EEPROM read, the Host issues a Vendor Specific Device to Host request to endpoint 0. The EEPROM word location is passed in the wIndex field of the Setup packet. The associated IN tokens are NAKed until the data has been read from the EEPROM. A 2-byte packet containing the EEPROM read data is then returned to the host.

©NetChip Technology, Inc., 1999
335 Pioneer Way, Mountain View, California 94041
TEL (650) 526-1490 FAX (650) 526-1494
http://www.netchip.com
Revision 0.5, November 8, 1999

Microchip Ex. 1062, p. 40
Microchip v. Aptiv
IPR2024-00230

4.3 USB Interface

The interface from the NET1080 to USB allows two Hosts to pass data between them. Each USB port on the NET1080 has the following endpoints.

4.3.1 Default Control Endpoint (Endpoint 00h)

Endpoint 0 is a bi-directional USB control endpoint which processes 8-byte packets to/from the Host PC. Each packet is decoded and USB control read and write 'requests' are handled automatically. Endpoint 0 supports the required USB protocol read and write requests (e.g. descriptor reads), as well as vendor-specific extensions. The vendor-specific extensions provide the capability to read and write internal registers.

4.3.2 Data OUT Endpoint (Endpoint 01h)

Endpoint 01h is a USB bulk OUT endpoint that accepts packets up to 64 bytes in length. Data received from a Host on this endpoint is transferred to a 256 byte FIFO that is connected to the Data IN Endpoint on the opposite USB port. When data is transferred to the other port, the LED for this port is turned on for a minimum of 32 milliseconds. Up to three complete packets can be in the FIFO at any time

4.3.3 Data IN Endpoint (Endpoint 81h)

Endpoint 81h is a USB bulk IN endpoint that transmits packets up to 64 bytes in length. In response to an IN token from the Host, data is read from a 256 byte FIFO that is connected to the Data OUT Endpoint on the opposite USB port, and is returned to the Host.

4.3.4 Mailbox OUT Endpoint (Endpoint 02h)

Endpoint 02h is a USB bulk OUT endpoint that accepts packets up to 16 bytes in length. Data received from a Host on this endpoint is transferred to an 8 byte IN Mailbox Endpoint on the opposite USB port. If the IN Mailbox of the other port is already busy, this endpoint returns a NAK handshake.

4.3.5 Mailbox IN Endpoint (Endpoint 82h)

Endpoint 82h is a USB interrupt IN endpoint that transmits the 8 bytes of IN Mailbox data. If no data is available, this endpoint returns a NAK handshake.

4.3.6 Status Endpoint (Endpoint 83h)

Endpoint 83h is a USB interrupt IN endpoint that reports the current number of bytes available in the next packet on the Data IN endpoint. If there are no packets available, the endpoint returns a NAK handshake. If there is a zero-length packet available, this endpoint returns 0.

4.4 Suspend Mode

When there is a three-millisecond period of inactivity on the USB, the USB specification requires a device to enter into a low-power suspended state. While in this state the device may not draw more than 500 µA of current from the USB connector's power pins. To facilitate this, the NET1080 automatically enters the suspend state after detecting the three millisecond period of inactivity. The NET1080 goes into suspend after detecting the suspend condition on both USB ports. If only one port is suspended, the NET1080 draws power from the other port.

In the suspended state, the NET1080's oscillator shuts down, and most output pins are tri-stated to conserve power (see section 3, **Pin Description**).

If the host has enabled Device Remote Wakeup, the NET1080 will wake up the suspended host when there is data available on its Data IN endpoint The NET1080 leaves suspend mode when a Host initiated wake-up is detected.

©NetChip Technology, Inc., 1999
335 Pioneer Way, Mountain View, California 94041
TEL (650) 526-1490 FAX (650) 526-1494
http://www.netchip.com
Revision 0.5, November 8, 1999

Microchip Ex. 1062, p. 41
Microchip v. Aptiv
IPR2024-00230

4.5 Root Port Reset

If the SIE in the NET1080 detects a single-ended zero on the root port for greater than 2.5 microseconds, it is interpreted as a root port reset. The following resources are reset for that port:

- SIE
- USB state machines
- USB Address Register is set to 0

4.6 NET1080 Power Configuration

The USB specification defines both bus-powered and self-powered devices. A *bus-powered* device is a peripheral that derives all of its power from the upstream USB connector, while a *self-powered* device has an external power supply. The NET1080 is a low power bus-powered peripheral. It draws its power from either USB Port A or Port B, or both ports.

The USB specification specifies the following requirements for maximum current draw:

- A peripheral not configured by the Host may draw only 100 mA from the USB power pins.
- A configured low-power device may not draw more than 100 mA from the USB connector's power pins.
- In suspend mode, the peripheral may not draw more than 500 µA from the USB connector's power pins

The NET1080 meets all of these specifications. It is designed to be used as a bus-powered device.

©NetChip Technology, Inc., 1999
335 Pioneer Way, Mountain View, California 94041
TEL (650) 526-1490 FAX (650) 526-1494
http://www.netchip.com
Revision 0.5, November 8, 1999

Microchip Ex. 1062, p. 42
Microchip v. Aptiv
IPR2024-00230

5 Register Descriptions

The NET1080 contains a 16 x 16-bit local register space that can be accessed by either Host over USB using Vendor Specific commands to Endpoint 0. When the NET1080 receives a RESET signal from the RESET# pin or from a USB RESET command, the registers are set to their default values.

Writes to reserved registers are ignored, and reads from reserved registers return a value of 0. For compatibility with future revisions, unused bits within a register should always be written with a zero.

USB Register Description

These registers determine some of the values reported in USB device and configuration descriptors retumed to the Hosts. The values in the registers may be changed by the initialization interface before a descriptor is returned to the Host. See Section 4.2.

5.1.1 USB Register Summary

Address Range	Register	Register Description
0 h	MFGID	USB Manufacturer ID Field
1 h	PRODID	Product ID Field
2 h	RELNUM	Device release number
3 h	MAXPWR	Maximum USB power used
4 h	USBCTL	USB control
5 h	INTPOLL	Interrupt Polling rate
6 h	STRINDEX1	USB String Index 1 (Language ID, Manufacturer)
7 h	STRINDEX2	USB String Index 2 (Product, Serial Number)
8 h-F h	Reserved	
10 h	TTL	Time to Live
11 h	STATUS	Status Register
12 h-1E h	Reserved	
1F h	CHIPREV	Current Silicon Revision

5.1.2 (Address 0h; MFGID) Manufacturer ID

Bits	Description	Read	Write	Default Value
15:0	**USB Manufacturer ID.** This register determines the Manufacturer ID during a 'Get Device Descriptor' request (assigned by USB-IF).	Yes	Yes	0525h

5.1.3 (Address 1h; PRODID) Product ID

Bits	Description	Read	Write	Default Value
15:0	**Product ID.** This register determines the Product ID during a 'Get Device Descriptor' request.	Yes	Yes	1080h

©NetChip Technology, Inc., 1999
335 Pioneer Way, Mountain View, California 94041
TEL (650) 526-1490 FAX (650) 526-1494
http://www.netchip.com
Revision 0.5, November 8, 1999

Microchip Ex. 1062, p. 43
Microchip v. Aptiv
IPR2024-00230

5.1.4 (Address 2h; RELNUM) Release Number

Bits	Description	Read	Write	Default Value
15:0	**Release Number.** This register determines the device release number during a 'Get Device Descriptor' request.	Yes	Yes	REL NUM

Note: RELNUM is the silicon revision, encoded as a 4-digit BCD value. The value of RELNUM for the first release of the chip is 0100h. The least-significant two digits are incremented for mask changes, and the most-significant two digits increment for major revisions. This value can be changed by the EEPROM to implement an application release number.

5.1.5 (Address 3h; MAXPWR) Maximum Power

Bits	Description	Read	Write	Default Value
15:8	**Reserved.**	Yes	No	0
7:0	**Maximum Power.** This register determines the maximum USB power during a 'Get Configuration Descriptor' request. Power is reported in units of 2 mA.	Yes	Yes	32h

©NetChip Technology, Inc., 1999
335 Pioneer Way, Mountain View, California 94041
TEL (650) 526-1490 FAX (650) 526-1494
http://www.netchip.com
Revision 0.5, November 8, 1999

Microchip Ex. 1062, p. 44
Microchip v. Aptiv
IPR2024-00230

5.1.6 (Address 4h; USBCTL) USB Control Register

Bits	Description	Read	Write	Default Value
15:13	**Reserved**	Yes	No	0
12	**Language ID String Enable.** If set, a language string ID is programmed into the EEPROM. The location of the language string is specified by the "**Language String Start Index"** byte in the serial EEPROM. If clear, the response to a Language ID String read is determined by the **String Default Enable** bit.	Yes	Yes	0
11	**Manufacturer String Enable.** If set, a manufacturer's string is programmed into the EEPROM. The location of the manufacturer's string is specified by the "**Manufacturer String Start Index"** byte in the serial EEPROM. If clear, the response to a Manufacturer String read is determined by the **String Default Enable** bit.	Yes	Yes	0
10	**Product String Enable.** If set, a product string is programmed into the EEPROM. The location of the product string in the EEPROM is specified by the "**Product String Start Index"** byte in the serial EEPROM. If clear, the response to a Product String language ID string read is determined by the **String Default Enable** bit.	Yes	Yes	0
9	**Serial Number String Enable.** If set, a serial number string is programmed into the EEPROM. The location of the serial number string is specified by the "**Serial Number String Start Index"** byte in the serial EEPROM. If clear, the response to a language ID string read is determined by the **String Default Enable** bit.	Yes	Yes	0
8	**String Default Enable.** If set, default strings are returned to the Host if the corresponding String Enable (bits 12:9) is 0. If clear, a string is returned only if the corresponding String Enable (bits 12:9) is 1.	No	Yes	1
7:4	**Reserved**	Yes	No	0
3	**Flush Other.** This bit flushes the Data IN FIFO for other port. This bit is self-clearing. When this bit is programmed from the EEPROM, it refers to the B port.	0	Yes/ Flush	0
2	**Flush This.** This bit flushes the Data IN FIFO for this port. This bit is self-clearing. When this bit is programmed from the EEPROM, it refers to the A port.	0	Yes/ Flush	0
1	**Disconnect Other Port.** Writing a 1 to this bit causes the DP Pull-up resistor not to be driven high, thus simulating a disconnect on the other USB Port. The port will stay disconnected until this bit is cleared. When programmed from the EEPROM, this bit refers to the B port.	Yes	Yes	0
0	**Disconnect This Port.** Writing a 1 to this bit causes the DP Pull-up resistor not to be driven high, thus simulating a disconnect on this USB Port. This bit clear itself after a 500-millisecond delay, and the port will automatically re-connect. When programmed from the EEPROM, this bit refers to the A port, and it will not clear itself after 500 milliseconds.	0	Yes	0

5.1.7 (Address 5h; INTPOLL) Interrupt Polling Interval Register

Bits	Description	Read	Write	Default Value
15:8	**Interrupt Polling Interval Register for Endpoint 83h.** This register specifies the interrupt polling interval in milliseconds for the Status Endpoint 83h. It is returned as the last byte of the Status Endpoint descriptor when the Get Configuration Descriptor request is issued.	Yes	Yes	1

©NetChip Technology, Inc., 1999
335 Pioneer Way, Mountain View, California 94041
TEL (650) 526-1490 FAX (650) 526-1494
http://www.netchip.com
Revision 0.5, November 8, 1999

Microchip Ex. 1062, p. 45
Microchip v. Aptiv
IPR2024-00230

7:0	**Interrupt Polling Interval Register for Endpoint 82h.** This register specifies the interrupt polling interval in milliseconds for the Mailbox Endpoint 82h. It is returned as the last byte of the Mailbox Endpoint descriptor when the Get Configuration Descriptor request is issued.	Yes	Yes	64h

5.1.8 (Address 6h; STRINDEX1) String Index 1

Bits	Description	Read	Write	Default Value
15:8	**Language ID String Index.** This field determines the EEPROM starting word address of the Language ID string.	Yes	Yes	0
7:0	**Manufacturer String Index.** This field determines the EEPROM starting word address of the Manufacturer string.	Yes	Yes	0

5.1.9 (Address 7h; STRINDEX2) String Index 2

Bits	Description	Read	Write	Default Value
15:8	**Product String Index.** This field determines the EEPROM starting word address of the Product string.	Yes	Yes	0
7:0	**Serial Number String Index.** This field determines the EEPROM starting word address of the Serial Number string.	Yes	Yes	0

5.1.10 (Address 10h; TTL) Time to Live

Bits	Description	Read	Write	Default Value
15:8	**Time to Live Other Port.** This field determines how many milliseconds a packet will stay in the Data FIFO on the other port before it is discarded. If set to 0, packets will not be discarded.	Yes	Yes	0
7:0	**Time to Live This Port.** This field determines how many milliseconds a packet will stay in the Data FIFO on this port before it is discarded. If set to 0, packets will not be discarded.	Yes	Yes	0

5.1.11 (Address 11h; STATUS) Status

Bits	Description	Read	Write	Default Value
15	**Port A.** This bit is set if read from the A port.	Yes	No	0
14	**Connected Other Port.** This bit indicates that the other side has connected	Yes	No	0
13	**Suspended Other Port.** This bit indicates that the other side has suspended.	Yes	No	0
12	**Mailbox Data Available Other Port.** This bit is set if there is data available in the USB Mailbox for the other port.	Yes	No	0
11:10	**Reserved.**	Yes	No	0
9:8	**Packets Available Other Port.** This field indicates the number of packets available in the Data FIFO of the other port.	Yes	No	0
7	**Reserved.**	Yes	No	1
6	**Connected This Port.** This bit indicates that this side has connected	Yes	No	0
5	**Suspended This Port.** This bit indicates that this side has suspended.	Yes	No	0
4	**Mailbox Data Available This Port.** This bit is set if there is data available in the USB Mailbox for this port.	Yes	No	0

©NetChip Technology, Inc., 1999
335 Pioneer Way, Mountain View, California 94041
TEL (650) 526-1490 FAX (650) 526-1494
http://www.netchip.com
Revision 0.5, November 8, 1999

Microchip Ex. 1062, p. 46
Microchip v. Aptiv
IPR2024-00230

3:2	**Reserved.**	Yes	No	0
1:0	**Packets Available This Port.** This field indicates the number of packets available in the Data FIFO of this port.	Yes	No	0

5.1.12 (Address 1Fh; CHIPREV) NET1080 Silicon Revision

Bits	Description	Read	Write	Default Value
15:0	**NET1080 Silicon Revision.** This is the Silicon Revision Number for the NET1080	Yes	No	RELNUM

Note: RELNUM is the silicon revision, encoded as a 4-digit BCD value. The value of RELNUM for the first release of the chip is 0100h. The least-significant two digits are incremented for mask changes, and the most-significant two digits increment for major revisions. This value cannot be changed.

©NetChip Technology, Inc., 1999
335 Pioneer Way, Mountain View, California 94041
TEL (650) 526-1490 FAX (650) 526-1494
http://www.netchip.com
Revision 0.5, November 8, 1999

Microchip Ex. 1062, p. 47
Microchip v. Aptiv
IPR2024-00230

6 USB Vendor-Specific Device Requests (Endpoint 0)

Vendor specific requests to endpoint 0 are used to access the internal registers of the NET1080 and to perform read and write cycles to the EEPROM. For register and EEPROM accesses, the wIndex determine the address. A bRequest of 10h is used for register accesses, and a bRequest of 11h is used for EEPROM accesses.

6.1 Register Write

A vendor request to endpoint 0 is used to perform register writes. One 16-bit write can be performed for each transfer. The data is not written to the target register until it has been determined that the USB transfer was successful. The target register address is passed in bits 7:0 of the wIndex field of the Setup packet. The write data is passed in the wValue field of the Setup packet. If the wLength field is not 0, the endpoint will return a STALL handshake. The register is not actually written until the Status Phase of the vendor request has completed.

Setup Byte	Contents	Description
0	BmRequestType	Bit 7 = direction (0=Out) Bits 6:5 = type (2=vendor) Bits 4:0 = Recipient (0 = device)
1	Brequest	10h = Register access
2	wValue (LSB)	Write data (LSB)
3	wValue (MSB)	Write data (MSB)
4	wIndex (LSB)	Register Address
5	wIndex (MSB)	Reserved – set to 0
6	wLength (LSB)	Number of bytes in Data Phase – must be 0
7	wLength (MSB)	Reserved – set to 0

6.2 Register Read

A vendor request to endpoint 0 is used to perform register reads. One 16-bit read can be performed for each transfer. The target register address is passed in bits 7:0 of the wIndex field of the Setup packet. If the wLength field is not 2, the endpoint will return a stall acknowledge.

Setup Byte	Contents	Description
0	BmRequestType	Bit 7 = direction (1=IN) Bits 6:5 = type (2=vendor) Bits 4:0 = Recipient (0 = device)
1	Brequest	10h = Register access
2	wValue (LSB)	Reserved – set to 0
3	wValue (MSB)	Reserved – set to 0
4	wIndex (LSB)	Register Address
5	wIndex (MSB)	Reserved – set to 0
6	wLength (LSB)	Number of bytes to read, must be 2
7	wLength (MSB)	Reserved – set to 0

Following is a description of the contents of the IN packet associated with this control read transfer.

Byte Index	Contents
0	Register Read Data (LSB)
1	Register Read Data (MSB)

©NetChip Technology, Inc., 1999
335 Pioneer Way, Mountain View, California 94041
TEL (650) 526-1490 FAX (650) 526-1494
http://www.netchip.com
Revision 0.5, November 8, 1999

Microchip Ex. 1062, p. 48
Microchip v. Aptiv
IPR2024-00230

6.3 EEPROM Write

A vendor request to endpoint 0 is used to perform EEPROM writes. One 16-bit write can be performed for each transfer. The EEPROM word address is passed in bits 9:0 of the wIndex field of the Setup packet. The write data is passed in the wValue field of the Setup packet. If the wLength field is not 0, the endpoint returns a STALL handshake. Further accesses to endpoint 0 are NAK'ed in the Status Phase until the write operation has completed.

Setup Byte	Contents	Description
0	BmRequestType	Bit 7 = direction (0=Out) Bits 6:5 = type (2=vendor) Bits 4:0 = Recipient (0 = device)
1	Brequest	11h = EEPROM access
2	wValue (LSB)	Write data (LSB)
3	wValue (MSB)	Write data (MSB)
4	wIndex (LSB)	EEPROM word Address
5	wIndex (MSB)	EEPROM word Address
6	wLength (LSB)	Number of bytes in Data Phase – must be 0
7	wLength (MSB)	Reserved – set to 0

6.4 EEPROM Read

A vendor request to endpoint 0 is used to perform EEPROM reads. One 16-bit read can be performed for each transfer. The EEPROM word address is passed in bits 9:0 of the wIndex field of the Setup packet. If the wLength field is not 2, the endpoint will return a stall acknowledge.

Setup Byte	Contents	Description
0	BmRequestType	Bit 7 = direction (1=IN) Bits 6:5 = type (2=vendor) Bits 4:0 = Recipient (0 = device)
1	Brequest	11h = EEPROM access
2	wValue (LSB)	Reserved – set to 0
3	wValue (MSB)	Reserved – set to 0
4	wIndex (LSB)	EEPROM word Address
5	wIndex (MSB)	EEPROM word Address
6	wLength (LSB)	Number of bytes to read, must be 2
7	wLength (MSB)	Reserved – set to 0

Following is a description of the contents of the IN packet associated with this control read transfer. IN tokens are NAK'ed until two bytes have been read from the EEPROM.

Byte Index	Contents
0	EEPROM Read Data (LSB)
1	EEPROM Read Data (MSB)

©NetChip Technology, Inc., 1999
335 Pioneer Way, Mountain View, California 94041
TEL (650) 526-1490 FAX (650) 526-1494
http://www.netchip.com
Revision 0.5, November 8, 1999

Microchip Ex. 1062, p. 49
Microchip v. Aptiv
IPR2024-00230

6.5 Manufacturer Test Mode

A vendor specific request can be used to set or clear the Timing Test Mode bit. Timing Test Mode is used during silicon verification and should not be enabled during normal operation.

6.5.1 Device Clear Feature (Timing Test Mode)

Offset	Number of Bytes	Description	Default Value
--	0	Clear the selected device feature wValue = 80h --> Timing test mode (clears test bit) wIndex ignored wLength = 0	--

6.5.2 Device Set Feature (Timing Test Mode)

Offset	Number of Bytes	Description	Default Value
--	0	Set the selected device feature wValue = 80h --> Timing test mode (sets test bit) wIndex ignored wLength = 0	--

©NetChip Technology, Inc., 1999
335 Pioneer Way, Mountain View, California 94041
TEL (650) 526-1490 FAX (650) 526-1494
http://www.netchip.com
Revision 0.5, November 8, 1999

Microchip Ex. 1062, p. 50
Microchip v. Aptiv
IPR2024-00230

7 USB Standard Device Requests (Endpoint 0)

7.1 Control Read Transfers

7.1.1 Get Device Status

Offset	Number of Bytes	Description	Default Value
0	2	bits 15:2 = Reserved bit 1 = Device Remote Wakeup enabled bit 0 = 0	0000h

7.1.2 Get Interface Status

Offset	Number of Bytes	Description	Default Value
0	2	bits 15:0 = Reserved	0000h

7.1.3 Get Endpoint 00h, 01h, 81h, 02h, 82h, 83h, 84h Status

Offset	Number of Bytes	Description	Default Value
0	2	bits 15:1 = Reserved bit 0 = Endpoint is stalled	0000h

7.1.4 Get Device Descriptor (18 Bytes)

Offset	Number of Bytes	Description	Default Value
0	1	Length	12h
1	1	Type (device)	01h
2	2	USB Specification Release Number	0101h
4	1	Class Code	FFh (Vendor Specific)
5	1	Sub Class Code	00h
6	1	Protocol	00h
7	1	Maximum Endpoint 0 Packet Size	08h
8	2	USB Manufacturer ID	Value of **MFGID** register
10	2	Product ID	Value of **PRODID** register
12	2	Device Release Number	Value of **RELNUM** register
14	1	Index of string descriptor describing manufacturer	01h (if **USBCTL** *Mfg. String Enable = 1)* 00h (if **USBCTL** *Mfg. String Enable = 0)*
15	1	Index of string descriptor describing product	02h (if **USBCTL** *Prod. String Enable = 1)* 00h (if **USBCTL** *Prod. String Enable = 0)*
16	1	Index of string descriptor describing serial number	03h (if **USBCTL** *Serial Number String Enable = 1)* 00h (if **USBCTL** *Serial Number String Enable = 0)*

©NetChip Technology, Inc., 1999
335 Pioneer Way, Mountain View, California 94041
TEL (650) 526-1490 FAX (650) 526-1494
http://www.netchip.com
Revision 0.5, November 8, 1999

Microchip Ex. 1062, p. 51
Microchip v. Aptiv
IPR2024-00230

17	1	Number of configurations	01h

7.1.5 Get Configuration Descriptor (53 bytes)

Note that all interface and endpoint descriptors are returned when this request is issued

Offset	Number of Bytes	Description	Default Value
Configuration Descriptor			
0	1	Length	09h
1	1	Type (configuration)	02h
2	2	Total length returned for this configuration	0035h
4	1	Number of Interfaces	01h
5	1	Number of this configuration	01h
6	1	Index of string descriptor describing this configuration	00h
7	1	Attributes bit 7 = Reserved – must be 1 bit 6 = Self-powered bit 5 = Remote Wakeup capability bits 4:0 = Reserved – set to 0	A0h
8	1	Maximum USB power required (in 2 mA units)	Value in **MAXPWR** register
Interface 0 Descriptor			
0	1	Size of this descriptor in bytes	09h
1	1	Type (interface)	04h
2	1	Number of this interface	00h
3	1	Alternate Interface	00h
4	1	Number of endpoints used by this interface (excluding endpoint 0)	05h
5	1	Class Code	FFh (Vendor Specific)
6	1	Sub Class Code	00h
7	1	Device Protocol	00h
8	1	Index of string descriptor describing this interface	00h
Endpoint 1 Descriptor			
0	1	Size of this descriptor	07h
1	1	Descriptor Type (endpoint)	05h
2	1	Endpoint Address bit 7 = direction (1 = IN, 0 = OUT) bits 6:4 = reserved bits 3:0 = endpoint number	01h
3	1	Endpoint Attributes Bits 7:2 = reserved Bits 1:0 00 = Control 01 = Isochronous 10 = Bulk 11 = Interrupt	02h
4	2	Maximum packet size of this endpoint	0040h
6	1	Interval for polling endpoint (not used)	00h

©NetChip Technology, Inc., 1999
335 Pioneer Way, Mountain View, California 94041
TEL (650) 526-1490 FAX (650) 526-1494
http://www.netchip.com

Microchip Ex. 1062, p. 52
Microchip v. Aptiv
IPR2024-00230

Endpoint 81h Descriptor			
0	1	Size of this descriptor	07h
1	1	Descriptor Type (endpoint)	05h
2	1	Endpoint Address bit 7 = direction (1 = IN, 0 = OUT) bits 6:4 = reserved bits 3:0 = endpoint number	81h
3	1	Endpoint Attributes bits 7:2 = reserved bits 1:0 00 = Control 01 = Isochronous 10 = Bulk 11 = Interrupt	02h
4	2	Maximum packet size of this endpoint	0040h
6	1	Interval for polling endpoint (in ms)	00h
Endpoint 2 Descriptor			
0	1	Size of this descriptor	07h
1	1	Descriptor Type (endpoint)	05h
2	1	Endpoint Address bit 7 = direction (1 = IN, 0 = OUT) bits 6:4 = reserved bits 3:0 = endpoint number	02h
3	1	Endpoint Attributes Bits 7:2 = reserved Bits 1:0 00 = Control 01 = Isochronous 10 = Bulk 11 = Interrupt	02h
4	2	Maximum packet size of this endpoint	0008h
6	1	Interval for polling endpoint (not used)	00h
Endpoint 82h Descriptor			
0	1	Size of this descriptor	07h
1	1	Descriptor Type (endpoint)	05h
2	1	Endpoint Address bit 7 = direction (1 = IN, 0 = OUT) bits 6:4 = reserved bits 3:0 = endpoint number	82h
3	1	Endpoint Attributes bits 7:2 = reserved bits 1:0 00 = Control 01 = Isochronous 10 = Bulk 11 = Interrupt	03h
4	2	Maximum packet size of this endpoint	0008h
6	1	Interval for polling endpoint (in ms)	Determined by bits 7:0 of **INTPOLL** register

©NetChip Technology, Inc., 1999
335 Pioneer Way, Mountain View, California 94041
TEL (650) 526-1490 FAX (650) 526-1494
http://www.netchip.com
Revision 0.5, November 8, 1999

Microchip Ex. 1062, p. 53
Microchip v. Aptiv
IPR2024-00230

Endpoint 83h Descriptor			
0	1	Size of this descriptor	07h
1	1	Descriptor Type (endpoint)	05h
2	1	Endpoint Address bit 7 = direction (1 = IN, 0 = OUT) bits 6:4 = reserved bits 3:0 = endpoint number	83h
3	1	Endpoint Attributes bits 7:2 = reserved bits 1:0 00 = Control 01 = Isochronous 10 = Bulk 11 = Interrupt	03h
4	2	Maximum packet size of this endpoint	0001h
6	1	Interval for polling endpoint (in ms)	Determined by bits 15:8 of **INTPOLL** register

7.1.6 Get String Descriptor 0

Offset	**Number of Bytes**	**Description**	**Default Value**
0	4	Language ID (English = 09, U.S. = 04)	04h, 03h h0409

7.1.7 Get String Descriptor 1

Offset	**Number of Bytes**	**Description**	**Default Value**
0	38	Manufacturer Descriptor	26h, 03h “Netchip Technology”

7.1.8 Get String Descriptor 2

Offset	**Number of Bytes**	**Description**	**Default Value**
0	48	Product Descriptor	30h, 03h “NET1080 USB TurboCONNECT”

7.1.9 Get String Descriptor 3

Offset	Number of Bytes	Description	Default Value
0	10	Serial Number Descriptor	0Ah, 03h “1001”

©NetChip Technology, Inc., 1999
335 Pioneer Way, Mountain View, California 94041
TEL (650) 526-1490 FAX (650) 526-1494
http://www.netchip.com

Microchip Ex. 1062, p. 54
Microchip v. Aptiv
IPR2024-00230

7.1.10 Get Configuration

Offset	Number of Bytes	Description	Default Value
0	1	Returns current device configuration	00h

7.1.11 Get Interface

Offset	Number of Bytes	Description	Default Value
0	1	Returns current alternate setting for the specified interface	00h

7.1.12 Set Address

Offset	Number of Bytes	Description	Default Value
--	0	Sets USB address of device Value = device address, Index = 0	--

7.2 Control Write Transfers

7.2.1 Set Configuration

Offset	Number of Bytes	Description	Default Value
--	0	Sets the device configuration Value = Configuration value (0 or 1 supported),	--

7.2.2 Set Interface

Offset	Number of Bytes	Description	Default Value
--	0	Selects alternate setting for specified interface Value = Alternate setting, Index = specified interface	--

7.2.3 Device Clear Feature

Offset	Number of Bytes	Description	Default Value
--	0	Clear the selected device feature Value = feature selector FS = 1 --> Device Remote Wakeup (disable)	--

7.2.4 Device Set Feature

Offset	Number of Bytes	Description	Default Value
--	0	Set the selected device feature Value = feature selector FS = 1 --> Device Remote Wakeup (enable)	--

©NetChip Technology, Inc., 1999
335 Pioneer Way, Mountain View, California 94041
TEL (650) 526-1490 FAX (650) 526-1494
http://www.netchip.com
Revision 0.5, November 8, 1999

Microchip Ex. 1062, p. 55
Microchip v. Aptiv
IPR2024-00230

7.2.5 Endpoint Clear Feature

Offset	Number of Bytes	Description	Default Value
--	0	Clear the selected endpoint feature Value = feature selector, Index = endpoint number FS = 0 --> Endpoint stall (clears stall bit)	--

7.2.6 Endpoint Set Feature

Offset	Number of Bytes	Description	Default Value
--	0	Set the selected endpoint feature Value = feature selector, Index = endpoint number FS = 0 --> Endpoint stall (sets stall bit)	--

©NetChip Technology, Inc., 1999
335 Pioneer Way, Mountain View, California 94041
TEL (650) 526-1490 FAX (650) 526-1494
http://www.netchip.com
Revision 0.5, November 8, 1999

Microchip Ex. 1062, p. 56
Microchip v. Aptiv
IPR2024-00230

8 Bulk and Interrupt Endpoints

8.1 Endpoint 01h 'OUT' Transactions (Data Out Pipe)

Offset	Number of Bytes	Description	Default Value
--	64	Host writes data to the FIFO connected to the Data IN Pipe of the opposite USB port.	--

8.2 Endpoint 81h 'IN' Transactions (Data In Pipe)

Offset	Number of Bytes	Description	Default Value
--	64	Host reads data from the FIFO connected to the Data IN Pipe of this USB port.	--

8.3 Endpoint 02h 'OUT' Transactions (Mailbox Out Pipe)

Offset	Number of Bytes	Description	Default Value
--	8	Host writes data to the FIFO connected to the Mailbox IN Pipe of the opposite USB port. If the IN Mailbox is already busy, this endpoint returns a NAK handshake.	--

8.4 Endpoint 82h 'IN' Transactions (Mailbox In Pipe)

Offset	Number of Bytes	Description	Default Value
--	8	Host reads data from the Mailbox IN Pipe of this USB port using an interrupt IN transaction. If no bytes are available in the Mailbox, this endpoint returns a NAK handshake..	--

8.5 Endpoint 83h 'IN' Transactions (Status Input Pipe)

Offset	Number of Bytes	Description	Default Value
--	1	Host reads this endpoint using an interrupt IN transaction. The value returned is the number of bytes available in the Data IN endpoint. If no data is available, this endpoint returns a NAK handshake. A value of 0 indicates a zero-length packet is available.	--

©NetChip Technology, Inc., 1999
335 Pioneer Way, Mountain View, California 94041
TEL (650) 526-1490 FAX (650) 526-1494
http://www.netchip.com

Microchip Ex. 1062, p. 57
Microchip v. Aptiv
IPR2024-00230

9 Electrical Specifications

9.1 Absolute Maximum Ratings

Conditions that exceed the Absolute Maximum limits may destroy the device.

Symbol	Parameter	Conditions	Min	Max	Unit
V_{DD}	Supply Voltage	With Respect to Ground	-0.3	4.0	V
V_{DDPLL}	PLL Supply Voltage	With Respect to Ground	-0.3	4.0	V
V_I	DC input voltage	With Respect to Ground	-0.3	V_{DD}+0.5	V
I_{OUT}	DC Output Current, per pin		-30	30	mA
T_{STG}	Storage Temperature	No bias	-65	150	° C
T_{AMB}	Ambient temperature	Under bias	-40	85	° C
V_{ESD}	ESD Rating	R = 1.5K, C = 100pF		2	KV

9.2 Recommended Operating Conditions

Conditions that exceed the Operating limits may cause the device to function incorrectly.

Symbol	Parameter	Conditions	Min	Max	Unit
V_{DD}	Supply Voltage		3.0	3.6	V
V_{DDPLL}	PLL Supply Voltage		3.0	3.6	V
V_I	Input Voltage		0	V_{DD}	V
T_A	Operating Temperature		0	70	° C
t_R	Input rise time		1	10	ns/V
t_F	Input fall time		1	10	ns/V
F_{OSC}	Oscillator or Crystal Frequency		5.985	6.015	MHz

9.3 DC Specifications

9.3.1 DC Specifications

Operating Conditions: V_{DD}: 3.3V ± 5%, T_A = 0°C to 70°C
All typical values are at V_{DD} = 3.3V and T_A = 25°C
Operating Conditions: Notes 1, 2.

Symbol	Parameter	Conditions	Min	Typ	Max	Unit
I_{DD}	V_{DD} Supply Current	V_{DD} = 3.3V		30	45	mA
I_{DDS}	V_{DD} Supply Current (Suspend)	Device suspended		5	75	µA
V_{IH}	High Level Input Voltage		2.0			V
V_{IL}	Low Level Input Voltage				0.8	V
I_{IL}	Input Leakage Current	Any pin	-1		1	µA
I_{OZ}	Off State Leakage Current		-1		1	µA
$C_{I/O}$	Input or Output Pin Capactitance	Pin to GND			10	pF

©NetChip Technology, Inc., 1999
335 Pioneer Way, Mountain View, California 94041
TEL (650) 526-1490 FAX (650) 526-1494
http://www.netchip.com
Revision 0.5, November 8, 1999

Microchip Ex. 1062, p. 58
Microchip v. Aptiv
IPR2024-00230

9.3.2 USB Port DC Specifications

Operating Conditions: V_{DD}: 3.3V ± 5%, T_A = 0°C to 70°C
All typical values are at V_{DD} = 3.3V and T_A = 25°C
Operating Conditions: Notes 1,2.

Symbol	Parameter	Conditions	Min	Typ	Max	Unit
V_{DI}	Differential Input Sensitivity	| (D+) - (D-) |	0.2			V
V_{CM}	Differential Common Mode Range	Includes VDI range	0.8		2.5	V
V_{SE}	Single Ended Receiver Threshold		0.8		2.0	V
V_{OH}	Static Output High	R_L of 15 KΩ to GND	2.8		3.6	V
V_{OL}	Static Output Low	R_L of 1.5 KΩ to 3.6V			0.3	V
I_{LO}	Hi-Z State Data Line Leakage	0V < V_{IN} < 3.3V	-10		+10	µA
C_{IO}	I/O Capacitance	Pin to GND			20	pF

9.3.3 USB Port AC Specifications

Operating Conditions: V_{DD}: 3.3V ± 5%, T_A = 0°C to 70°C
All typical values are at V_{DD} = 3.3V and T_A = 25°C
Operating Conditions: Notes 1,2,3.

Symbol	Parameter	Conditions	Waveform	Min	Typ	Max	Unit
T_R	Rise & Fall Times	C_L = 50 pF	Figure 9-1	4		20	ns
T_F		Notes 4,5		4		20	
T_{RFM}	Rise/Fall time matching	(T_R/ T_F)	Figure 9-1	90		110	%
V_{CRS}	Output Signal Crossover Voltage			1.3		2.0	V
Z_{DRV}	Driver Output Resistance	Steady State Drive		10		15	Ω
T_{DRATE}	Data Rate			11.97	12	12.03	Mbs
T_{DDJ1}	Source Differential Driver Jitter to Next Transition	Notes 6,7.	Figure 9-2	-3.5	0	3.5	ns
T_{DDJ2}	Source Differential Driver Jitter for Paired Transitions	Notes 6,7	Figure 9-2	-4.0	0	4.0	ns
T_{DEOP}	Differential to EOP Transition Skew	Note 7	Figure 9-3	-2	0	5	ns
T_{EOPT}	Source EOP Width	Note 7	Figure 9-3	160	167	175	ns
T_{JR1}	Receiver Data Jitter Tolerance to Next Transition	Note 7	Figure 9-4	-18.5	0	18.5	ns
T_{JR2}	Receiver Data Jitter Tolerance for Paired Transitions	Note 7	Figure 9-4	-9	0	9	ns

©NetChip Technology, Inc., 1999
335 Pioneer Way, Mountain View, California 94041
TEL (650) 526-1490 FAX (650) 526-1494
http://www.netchip.com
Revision 0.5, November 8, 1999

Microchip Ex. 1062, p. 59
Microchip v. Aptiv
IPR2024-00230

T_{EOPR1}	EOP Width at Receiver; Must reject as EOP	Note 7	Figure 9-3	40			ns
T_{EOPR2}	EOP Width at Receiver; Must accept as EOP	Note 7	Figure 9-3	80			ns

9.3.4 USB Port AC/DC Specification Notes

1. All voltages measured from the local ground potential, unless otherwise specified.
2. All timings use a capacitive load (C_L) to ground of 50 pF, unless otherwise specified.
3. Full Speed timings have a 1.5 kΩ pull-up to 3.3 V on the D+ data line.
4. Measured from 10% to 90% of the data signal.
5. The rising and falling edges should be smoothly transitioning (monotonic).
6. Timing difference between the differential data signals.
7. Measured at crossover point of differential data signals.
8. The maximum load specification is the maximum effective capacitive load allowed that meets the target hub V_{BUS} droop of 330 mV.

9.3.5 USB Port AC Waveforms

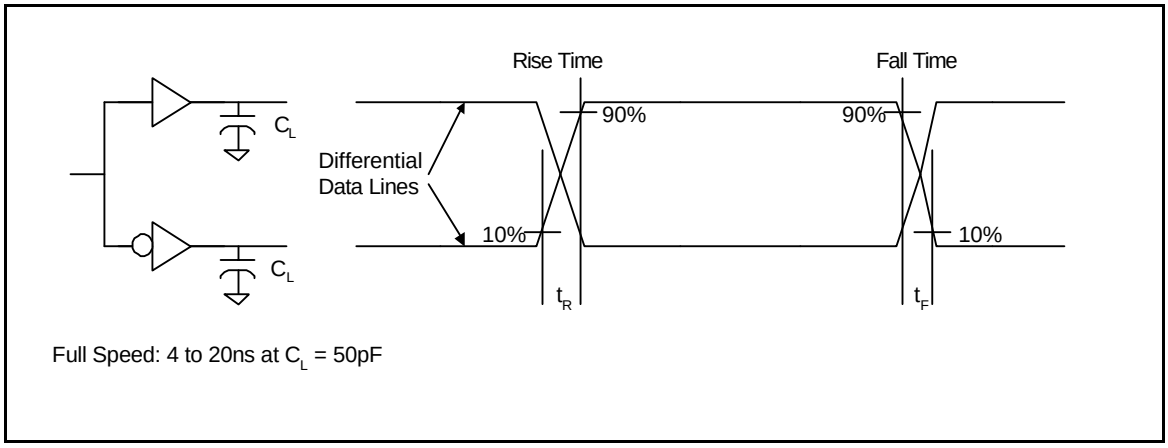

Figure 9-1. Data Signal Rise and Fall Time

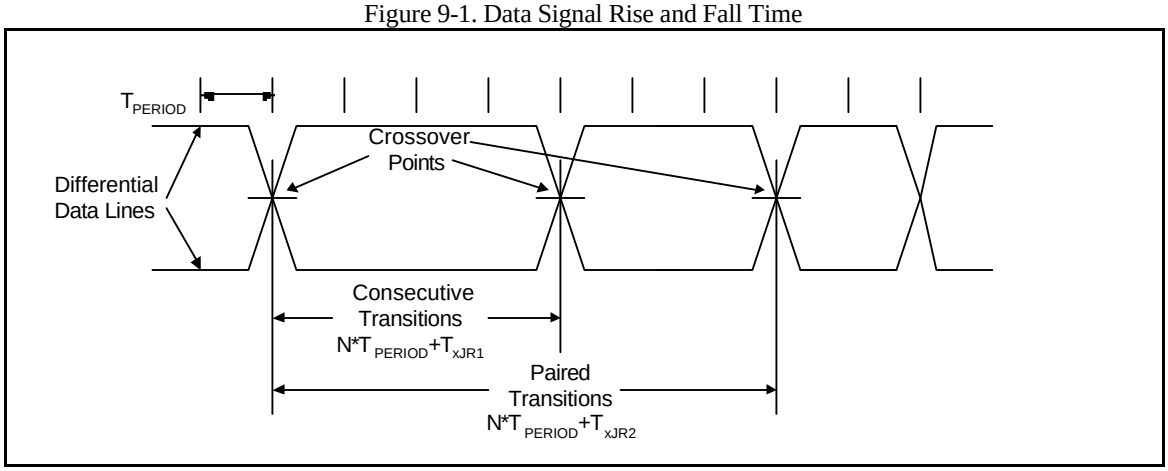

Figure 9-2. Differential Data Jitter

©NetChip Technology, Inc., 1999
335 Pioneer Way, Mountain View, California 94041
TEL (650) 526-1490 FAX (650) 526-1494
http://www.netchip.com
Revision 0.5, November 8, 1999

Microchip Ex. 1062, p. 60
Microchip v. Aptiv
IPR2024-00230

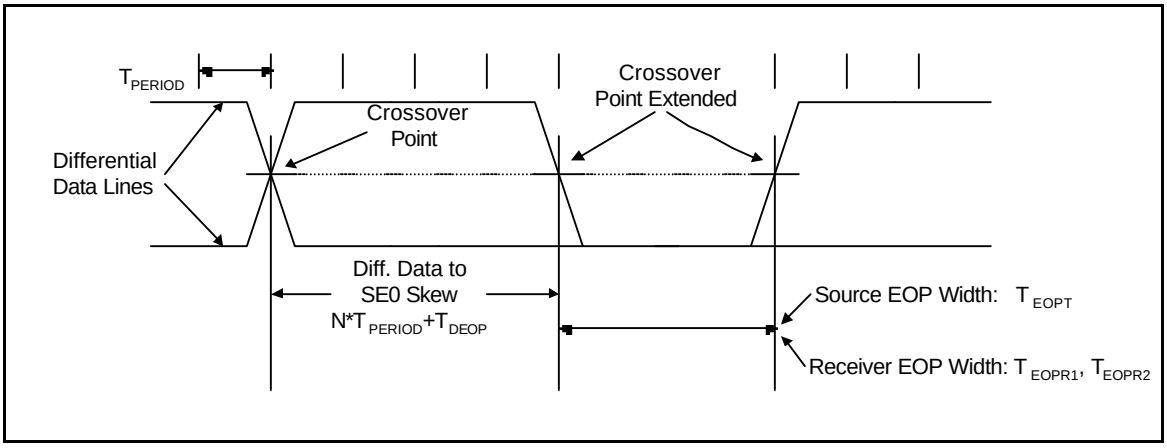

Figure 9-3. Differential to EOP Transition Skew and EOP Width

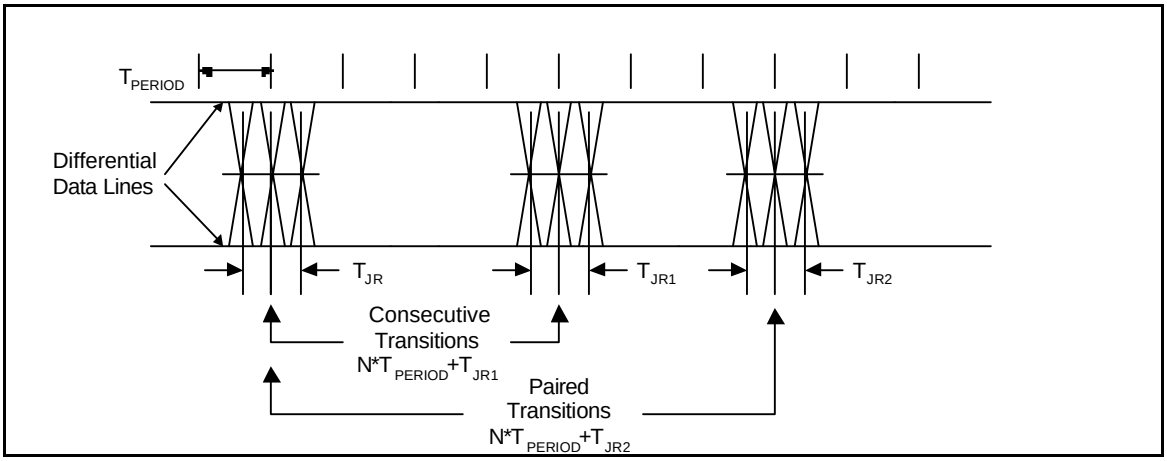

Figure 9-4. Receiver Jitter Tolerance

©NetChip Technology, Inc., 1999
335 Pioneer Way, Mountain View, California 94041
TEL (650) 526-1490 FAX (650) 526-1494
http://www.netchip.com
Revision 0.5, November 8, 1999

Microchip Ex. 1062, p. 61
Microchip v. Aptiv
IPR2024-00230

10 Mechanical Drawing

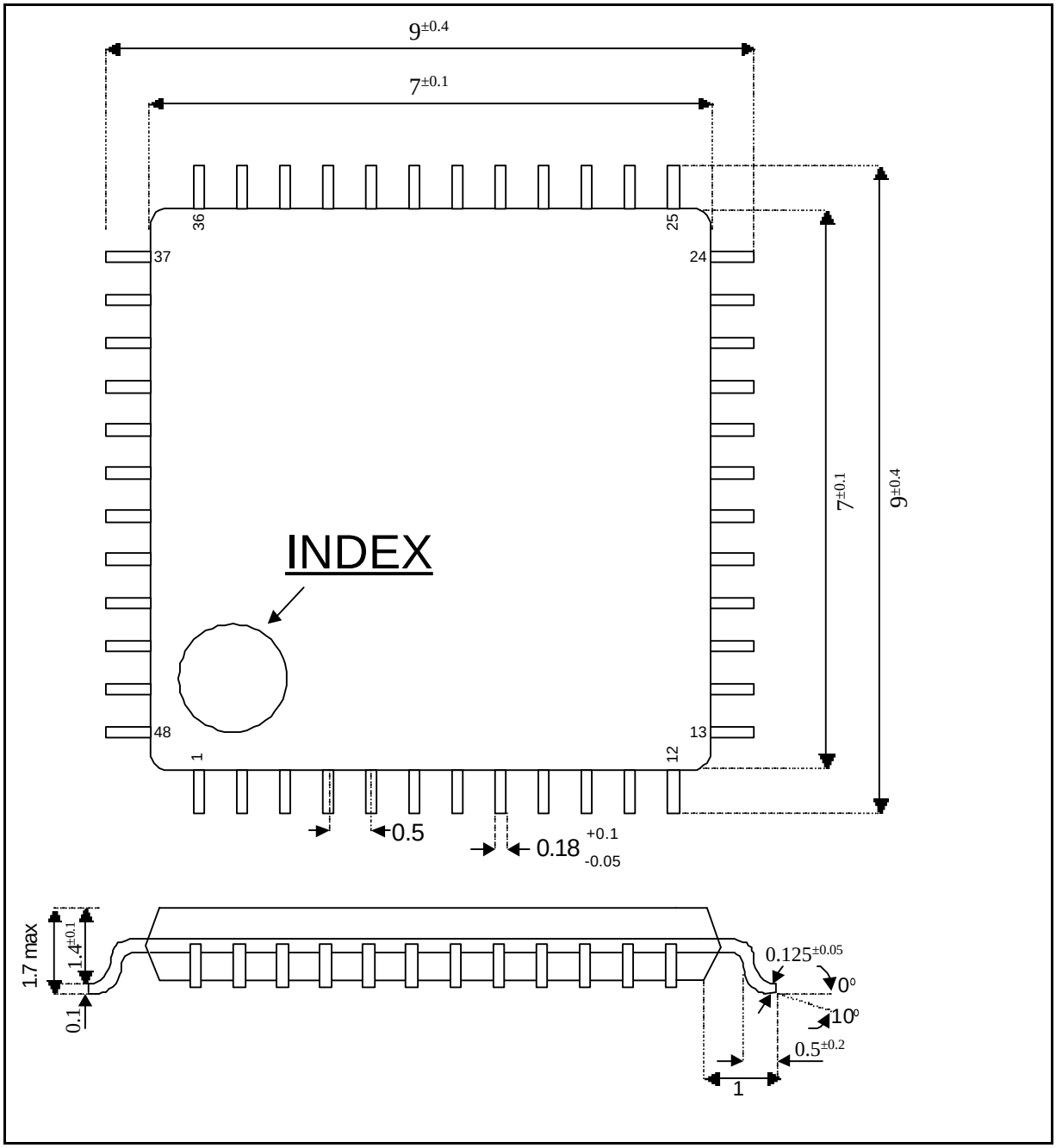

All dimensions in millimeters.

©NetChip Technology, Inc., 1999
335 Pioneer Way, Mountain View, California 94041
TEL (650) 526-1490 FAX (650) 526-1494
http://www.netchip.com
Revision 0.5, November 8, 1999

Microchip Ex. 1062, p. 62
Microchip v. Aptiv
IPR2024-00230

EXHIBIT B

Folder 002

FAIRCHILD SEMICONDUCTOR®

Click here for this datasheet translated into Chinese!

November 2010

FSUSB63 — 3:1 High-Speed USB 2.0 Switch / Multiplexer

Features

Switch Type	3:1 USB Switch
USB	USB 2.0 High-Speed & Full-Speed Compliant
Break-Before-Make Time	126µs
R_{ON}	6Ω Typical
C_{ON}	6pF Typical
Bandwidth	830MHz
V_{CC}	2.7 to 4.4V
V_{CNTRL}	0 to V_{CC}
Operating Temperature	-40°C to 85°C
I_{CCSLP}	<1µA
I_{CCACT}	7.5µA Typical
Package	12- Lead UMLP 1.80 x 1.80 x 0.55mm, 0.40mm pitch
Top Mark	KG
Ordering Information	FSUSB63UMX

Applications

- Cell Phone, Digital Camera, Notebook
- LCD Monitor, TV, and Set-Top Box
- Netbook, Mobile Internet Device (MID)

Description

The FSUSB63 is a bi-directional, low-power, High-Speed (HS) USB 2.0 3:1 Multiplexer (MUX). It is optimized for switching among three high-speed (480Mbps) sources or any combination of high-speed and full-speed (12Mbps) USB sources, such as an application processor, to one USB 2.0 connector.

The FSUSB63 has a break-before-make time to force re-enumeration by the host when switching between different HS USB 2.0 controllers and thus requires minimal software changes.

The FSUSB63 is compliant with the requirements of USB 2.0 and features extremely low on capacitance (C_{ON}). The wide bandwidth exceeds the requirement to pass the third harmonic, resulting in signals with minimum edge and phase distortion. Superior channel-to-channel crosstalk also minimizes interference.

Related Resources

- *For samples and questions, please contact: Analog.Switch@fairchildsemi.com.*
- FSUSB63 Demonstration Board

Typical Application

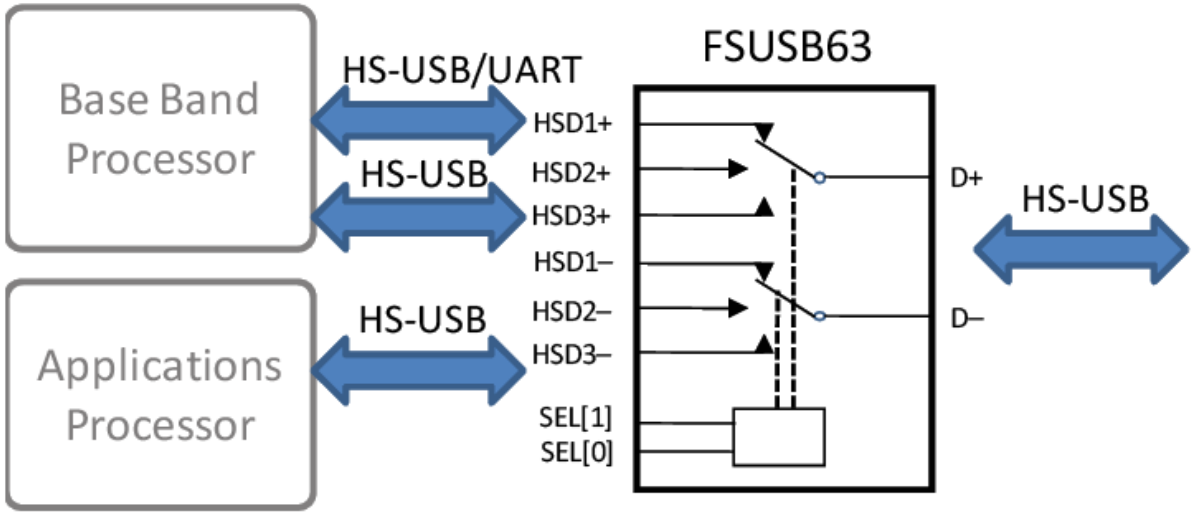

Figure 1. Analog Symbol

© 2010 Fairchild Semiconductor Corporation

Microchip Ex. 1062, p. 64
Microchip v. Aptiv
IPR2024-00230

Physical Dimensions

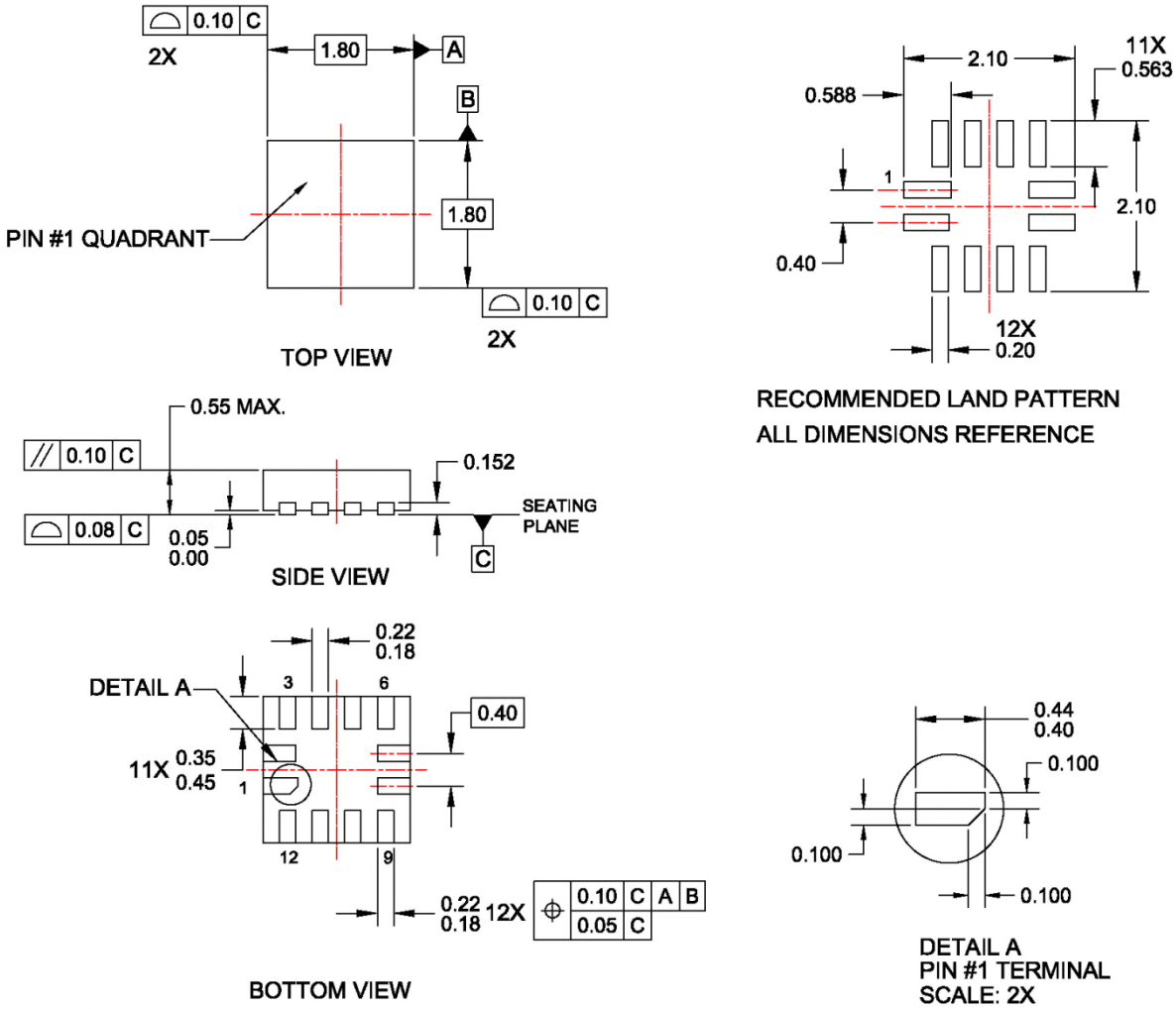

NOTES:

A. DIMENSIONS ARE IN MILLIMETERS.
B. DIMENSIONS AND TOLERANCES PER ASME Y14.5M, 1994
C. LANDPATTERN IS A MINIMAL TOE DESIGN
D. DRAWING FILENAME: UMLP12Arev3

Figure 17. 12-Lead, Ultrathin Molded Leadless Package (UMLP)

Ordering Information

Part Number	Top Mark	Operating Temperature Range	Package
FSUSB63UMX	KG	-40 to +85°C	12-Lead, Quad, Ultrathin Molded Leadless Package (UMLP), 1.8mm x 1.8mm x 0.55mm, 0.4mm pitch

Package drawings are provided as a service to customers considering Fairchild components. Drawings may change in any manner without notice. Please note the revision and/or date on the drawing and contact a Fairchild Semiconductor representative to verify or obtain the most recent revision. Package specifications do not expand the terms of Fairchild's worldwide terms and conditions, specifically the warranty therein, which covers Fairchild products.

Always visit Fairchild Semiconductor's online packaging area for the most recent package drawings: http://www.fairchildsemi.com/packaging/.

Microchip Ex. 1062, p. 65
Microchip v. Aptiv
IPR2024-00230

FAIRCHILD SEMICONDUCTOR®

TRADEMARKS

The following includes registered and unregistered trademarks and service marks, owned by Fairchild Semiconductor and/or its global subsidiaries, and is not intended to be an exhaustive list of all such trademarks.

AccuPower™
Auto-SPM™
Build it Now™
CorePLUS™
CorePOWER™
CROSSVOLT™
CTL™
Current Transfer Logic™
DEUXPEED®
Dual Cool™
EcoSPARK®
EfficientMax™
ESBC™
F®
Fairchild®
Fairchild Semiconductor®
FACT Quiet Series™
FACT®
FAST®
FastvCore™
FETBench™
FlashWriter®*
FPS™
F-PFS™
FRFET®
Global Power Resource℠
Green FPS™
Green FPS™ e-Series™
Gmax™
GTO™
IntelliMAX™
ISOPLANAR™
MegaBuck™
MICROCOUPLER™
MicroFET™
MicroPak™
MicroPak2™
MillerDrive™
MotionMax™
Motion-SPM™
OptoHiT™
OPTOLOGIC®
OPTOPLANAR®
PDP SPM™
Power-SPM™
PowerTrench®
PowerXS™
Programmable Active Droop™
QFET®
QS™
Quiet Series™
RapidConfigure™
™
Saving our world, 1mW/W/kW at a time™
SignalWise™
SmartMax™
SMART START™
SPM®
STEALTH™
SuperFET®
SuperSOT™-3
SuperSOT™-6
SuperSOT™-8
SupreMOS®
SyncFET™
Sync-Lock™
SYSTEM GENERAL®*
The Power Franchise®
the power franchise
TinyBoost™
TinyBuck™
TinyCalc™
TinyLogic®
TINYOPTO™
TinyPower™
TinyPWM™
TinyWire™
TriFault Detect™
TRUECURRENT™*
µSerDes™
µ SerDes
UHC®
Ultra FRFET™
UniFET™
VCX™
VisualMax™
XS™

* Trademarks of System General Corporation, used under license by Fairchild Semiconductor.

DISCLAIMER

FAIRCHILD SEMICONDUCTOR RESERVES THE RIGHT TO MAKE CHANGES WITHOUT FURTHER NOTICE TO ANY PRODUCTS HEREIN TO IMPROVE RELIABILITY, FUNCTION, OR DESIGN. FAIRCHILD DOES NOT ASSUME ANY LIABILITY ARISING OUT OF THE APPLICATION OR USE OF ANY PRODUCT OR CIRCUIT DESCRIBED HEREIN; NEITHER DOES IT CONVEY ANY LICENSE UNDER ITS PATENT RIGHTS, NOR THE RIGHTS OF OTHERS. THESE SPECIFICATIONS DO NOT EXPAND THE TERMS OF FAIRCHILD'S WORLDWIDE TERMS AND CONDITIONS, SPECIFICALLY THE WARRANTY THEREIN, WHICH COVERS THESE PRODUCTS.

LIFE SUPPORT POLICY

FAIRCHILD'S PRODUCTS ARE NOT AUTHORIZED FOR USE AS CRITICAL COMPONENTS IN LIFE SUPPORT DEVICES OR SYSTEMS WITHOUT THE EXPRESS WRITTEN APPROVAL OF FAIRCHILD SEMICONDUCTOR CORPORATION.

As used herein:

1. Life support devices or systems are devices or systems which, (a) are intended for surgical implant into the body or (b) support or sustain life, and (c) whose failure to perform when properly used in accordance with instructions for use provided in the labeling, can be reasonably expected to result in a significant injury of the user.
2. A critical component in any component of a life support, device, or system whose failure to perform can be reasonably expected to cause the failure of the life support device or system, or to affect its safety or effectiveness.

ANTI-COUNTERFEITING POLICY

Fairchild Semiconductor Corporation's Anti-Counterfeiting Policy. Fairchild's Anti-Counterfeiting Policy is also stated on our external website, www.fairchildsemi.com, under Sales Support.

Counterfeiting of semiconductor parts is a growing problem in the industry. All manufacturers of semiconductor products are experiencing counterfeiting of their parts. Customers who inadvertently purchase counterfeit parts experience many problems such as loss of brand reputation, substandard performance, failed applications, and increased cost of production and manufacturing delays. Fairchild is taking strong measures to protect ourselves and our customers from the proliferation of counterfeit parts. Fairchild strongly encourages customers to purchase Fairchild parts either directly from Fairchild or from Authorized Fairchild Distributors who are listed by country on our web page cited above. Products customers buy either from Fairchild directly or from Authorized Fairchild Distributors are genuine parts, have full traceability, meet Fairchild's quality standards for handling and storage and provide access to Fairchild's full range of up-to-date technical and product information. Fairchild and our Authorized Distributors will stand behind all warranties and will appropriately address any warranty issues that may arise. Fairchild will not provide any warranty coverage or other assistance for parts bought from Unauthorized Sources. Fairchild is committed to combat this global problem and encourage our customers to do their part in stopping this practice by buying direct or from authorized distributors.

PRODUCT STATUS DEFINITIONS

Definition of Terms

Datasheet Identification	Product Status	Definition
Advance Information	Formative / In Design	Datasheet contains the design specifications for product development. Specifications may change in any manner without notice.
Preliminary	First Production	Datasheet contains preliminary data; supplementary data will be published at a later date. Fairchild Semiconductor reserves the right to make changes at any time without notice to improve design.
No Identification Needed	Full Production	Datasheet contains final specifications. Fairchild Semiconductor reserves the right to make changes at any time without notice to improve the design.
Obsolete	Not In Production	Datasheet contains specifications on a product that is discontinued by Fairchild Semiconductor. The datasheet is for reference information only.

Rev. I50

© 2010 Fairchild Semiconductor Corporation

Microchip Ex. 1062, p. 66
Microchip v. Aptiv
IPR2024-00230

JURAT ATTACHMENT

A notary public or other officer completing this certificate verifies only the identity of the individual who signed the document to which this certificate is attached, and not the truthfulness, accuracy, or validity of that document.

STATE OF Texas }

COUNTY OF Tarrant }

The foregoing instrument was subscribed and sworn before me this date of 08/31/2023, by Nathaniel Frank-White

This notarial act was an online notarization.

BRITTANY RENE COPELAND
ELECTRONIC NOTARY PUBLIC
STATE OF TEXAS
NOTARY ID: 133645929
COMISSION EXP: MARCH 15 2026

(Notary Seal)

Notary's Signature

Registration No.: 133645929

Commission Expiration Date: March 15, 2026

Microchip Ex. 1062, p. 67
Microchip v. Aptiv
IPR2024-00230