Click to see this datasheet in Simplified Chinese!

FAIRCHILD SEMICONDUCTOR®

September 2008

FSUSB30
Low-Power, Two-Port, High-Speed USB 2.0 (480Mbps) Switch

Features

- Low On Capacitance: 3.7pF (Typical)
- Low On Resistance: 6.5Ω (Typical)
- Low Power Consumption: 1µA (Maximum)
  - 10µA Maximum I_{CCT} over an Expanded Control Voltage Range (V_{IN} = 2.6V, V_{CC} = 4.3V)
- Wide -3dB Bandwidth, >720MHz
- 8KV ESD Protection
- Power-Off Protection when V_{CC} = 0V; D+/D- Pins can Tolerate up to 5.5V
- Packaged in:
  - 10-lead MicroPak™ (1.6 x 2.1mm)
  - 14-lead DQFN
  - 10-lead MSOP
  - 10-lead UMLP (1.4 x 1.8mm)

Applications

- Cell phone, PDA, Digital Camera, and Notebook LCD Monitor, TV, and Set-top Box

Related Application Notes

- *AN-6022 Using the FSUSB30 / FSUSB31 to Comply with USB 2.0 Fault Condition Requirements*

Description

The FSUSB30 is a low-power, two-port, high-speed USB 2.0 switch. Configured as a double-pole double-throw (DPDT) switch, it is optimized for switching between two high-speed (480Mbps) sources or a Hi-Speed and Full-Speed (12Mbps) source. The FSUSB30 is compatible with the requirements of USB2.0 and features an extremely low on capacitance (C_{ON}) of 3.7pF. The wide bandwidth of this device (720MHz), exceeds the bandwidth needed to pass the third harmonic, resulting in signals with minimum edge and phase distortion. Superior channel-to-channel crosstalk minimizes interference.

The FSUSB30 contains special circuitry on the D+/D- pins which allows the device to withstand an overvoltage condition when powered off. This device is also designed to minimize current consumption even when the control voltage applied to the S pin, is lower than the supply voltage (V_{CC}). This feature is especially valuable to ultra-portable applications such as cell phones, allowing for direct interface with the general purpose I/Os of the baseband processor. Other applications include switching and connector sharing in portable cell phones, PDAs, digital cameras, printers, and notebook computers.

Ordering Information

Order Number	Package Number	Product Code Top Mark	Eco Status	Package Description
FSUSB30L10X	MAC010A	FJ	RoHS	10-Lead MicroPak, 1.6 x 2.1mm
FSUSB30BQX	MLP014A	USB30	Green	14-Terminal Depopulated Quad Very-Thin Flat Pack No Leads (DQFN), JEDEC MO-241, 2.5 x 3.0mm
FSUSB30MUX	MUA10A	FSUSB30	Green	10-Lead Molded Small Outline Package (MSOP), JEDEC MO-187, 3.0mm Wide
FSUSB30UMX	MLP010A	GJ	Green	10-Lead, Quad, Ultrathin, MLP (UMLP) 1.4 x 1.8mm

For Fairchild's definition of "green" Eco Status, please visit: http://www.fairchildsemi.com/company/green/rohs_green.html.

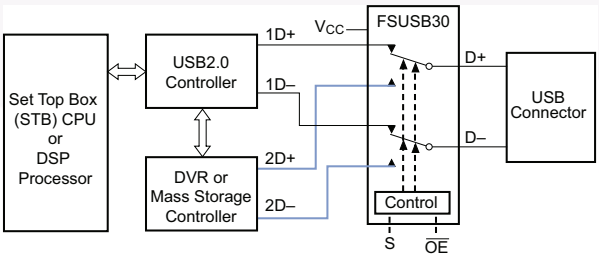

Figure 1. Typical Application

MicroPak™ is a trademark of Fairchild Semiconductor Corporation.

© 2006 Fairchild Semiconductor Corporation

Microchip Ex. 1068, p. 1
Microchip v. Aptiv
IPR2024-00230

Connection Diagrams

Pad Assignments for MicroPak

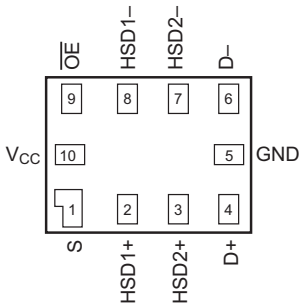

(Top View)

Pad Assignments for DQFN

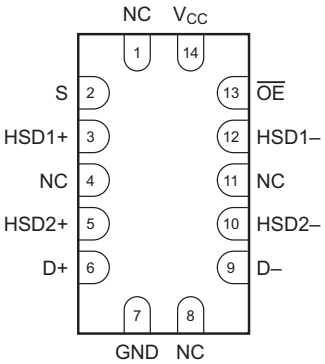

(Top Through View)

Pin Assignment for MSOP

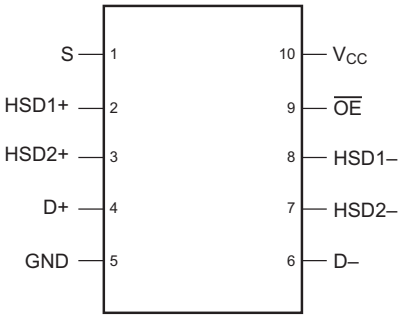

(Top Through View)

Pad Assignments for µMLP

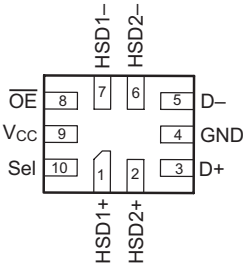

(Top Through View)

Analog Symbol

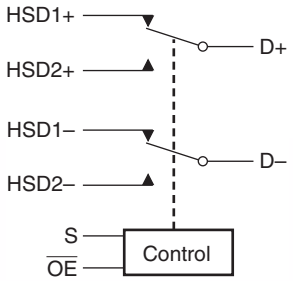

Pin Descriptions

Pin Name	Description
$\overline{OE}$	Bus Switch Enable
S	Select Input
D+, D–, HSDn+, HSDn–	Data Ports
NC	No Connect

Truth Table

S	$\overline{OE}$	Function
X	HIGH	Disconnect
LOW	LOW	D+, D– = $HSD1_n$
HIGH	LOW	D+, D– = $HSD2_n$

Microchip Ex. 1068, p. 2
Microchip v. Aptiv
IPR2024-00230

Absolute Maximum Ratings

Stresses exceeding the absolute maximum ratings may damage the device. The device may not function or be operable above the recommended operating conditions and stressing the parts to these levels is not recommended. In addition, extended exposure to stresses above the recommended operating conditions may affect device reliability. The absolute maximum ratings are stress ratings only.

Symbol	Parameter		Minimum	Maximum	Unit
V_{CC}	Supply Voltage		-0.5	+5.5	V
V_{CNTRL}	DC Input Voltage(1)		-0.5	V_{CC}	V
V_{SW}	DC Switch Voltage(1)	HSDnX	0.5	V_{CC}	V
		D+,D- when V_{CC} > 0	0.5	V_{CC}	V
		D+,D- when V_{CC} = 0	-0.50	V_{CC}	V
I_{IK}	DC Input Diode Current		-50		mA
I_{OUT}	DC Output Current			50	mA
T_{STG}	Storage Temperature		-65	+150	°C
ESD	Human Body Model	All Pins		8	kV
		I/O to GND		8	kV

Note:

1. The input and output negative voltage ratings may be exceeded if the input and output diode current ratings are observed.

Recommended Operating Conditions

The Recommended Operating Conditions table defines the conditions for actual device operation. Recommended operating conditions are specified to ensure optimal performance to the datasheet specifications. Fairchild does not recommend exceeding them or designing to absolute maximum ratings.(2)

Symbol	Parameter	Minimum	Maximum	Unit
V_{CC}	Supply Voltage	3.0	4.3	V
V_{IN}	Control Input Voltage	0	V_{CC}	V
V_{SW}	Switch Input Voltage	0	V_{CC}	V
T_A	Operating Temperature	-40	+85	°C
ΘJ_A	Thermal Resistance, 10 MicroPak		250	°C/W

Note:

2. Control input must be held HIGH or LOW and it must not float.

© 2006 Fairchild Semiconductor Corporation

Microchip Ex. 1068, p. 3
Microchip v. Aptiv
IPR2024-00230

DC Electrical Characteristics

All typical values are at 25°C unless otherwise specified.

Symbol	Parameter	Conditions	V_{CC} (V)	T_A = –40°C to +85°C			Unit
				Min.	Typ.	Max.	
V_{IK}	Clamp Diode Voltage	I_{IN} = -18mA	3.0			-1.2	V
V_{IH}	Input Voltage HIGH		3.0 to 3.6	1.3			V
			4.3	1.7			V
V_{IL}	Input Voltage LOW		3.0 to 3.6			0.5	V
			4.3			0.7	V
I_{IN}	Control Input Leakage	V_{SW} = 0.0V to V_{CC}	4.3	-1.0		1.0	µA
I_{OZ}	OFF State Leakage	0 ≤ Dn, $HSD1_n$, $HSD2_n$ ≤ V_{CC}	4.3	-2.0		2.0	µA
I_{OFF}	Power OFF Leakage Current (D+, D–)	V_{SW} = 0V to 4.3V, V_{CC} = 0V	0	-2.0		2.0	µA
R_{ON}	Switch On Resistance(3)	V_{SW} = 0.4V, I_{ON} = -8mA	3.0		6.5	10.0	Ω
		V_{SW} = 0V, I_O = 30mA at 25°C	3.6			7.0	Ω
ΔR_{ON}	Delta R_{ON}(4)	V_{SW} = 0.4V, I_{ON} = -8mA	3.0		0.35		Ω
R_{ON} Flatness	R_{ON} Flatness(3)	V_{SW} = 0.0V - 1.0V, I_{ON} = -8mA	3.0		2.0		Ω
I_{CC}	Quiescent Supply Current	V_{CNTRL} = 0.0V or V_{CC}, I_{OUT} = 0	4.3			1.0	µA
I_{CCT}	Increase in I_{CC} Current per Control Voltage	V_{CNTRL} (control input) = 2.6V	4.3			10.0	µA

Notes:

3. Measured by the voltage drop between Dn, $HSD1_n$, $HSD2_n$ pins at the indicated current through the switch. On resistance is determined by the lower of the voltage on the two ports.
4. Guaranteed by characterization.

AC Electrical Characteristics

All typical values are for V_{CC} = 3.3V at 25°C unless otherwise specified.

Symbol	Parameter	Conditions	V_{CC} (V)	T_A = –40°C to +85°C			Unit	Figure Number
				Min.	Typ.	Max.		
t_{ON}	Turn-On Time S, $\overline{OE}$ to Output	$HD1_n$, $HD2_n$ = 0.8V, R_L = 50Ω, C_L = 5pF	3.0 to 3.6		13	30	ns	Figure 9
t_{OFF}	Turn-Off Time S, $\overline{OE}$ to Output	$HD1_n$, $HD2_n$ = 0.8V, R_L = 50Ω, C_L = 5pF	3.0 to 3.6		12	25	ns	Figure 9
t_{PD}	Propagation Delay(4)	R_L = 50Ω, C_L = 5pF	3.3		0.25		ns	Figure 7 Figure 8
t_{BBM}	Break-Before-Make	R_L = 50Ω, C_L = 5pF, V_{IN} = 0.8V	3.0 to 3.6	2.0		6.5	ns	Figure 10
O_{IRR}	Off Isolation (Non-Adjacent)	f = 240MHz, R_T = 50Ω	3.0 to 3.6		-30		dB	Figure 13
Xtalk	Non-Adjacent Channel Crosstalk	R_T = 50Ω, f = 240MHz	3.0 to 3.6		-45		dB	Figure 14
BW	–3dB Bandwidth	R_T = 50Ω, C_L = 0pF	3.0 to 3.6		720		MHz	Figure 12
		R_T = 50Ω, C_L = 5pF			550			

© 2006 Fairchild Semiconductor Corporation

Microchip Ex. 1068, p. 4
Microchip v. Aptiv
IPR2024-00230

USB Hi-Speed Related AC Electrical Characteristics

Symbol	Parameter	Conditions	V_{CC} (V)	T_A = –40°C to +85°C			Units	Figure Number
				Min.	Typ.	Max.		
$t_{SK(O)}$	Channel-to-Channel Skew(5)	R_L = 50Ω, C_L = 5pF	3.0 to 3.6		50		ps	Figure 7 Figure 11
$t_{SK(P)}$	Skew of Opposite Transitions of the Same Output(5)	R_L = 50Ω, C_L = 5pF	3.0 to 3.6		20		ps	Figure 7 Figure 11
t_J	Total Jitter(5)	R_L = 50Ω, C_L = 5pF, t_R = t_F = 500ps at 480 Mbps (PRBS = 2^{15} – 1)	3.0 to 3.6		200		ps	

Note:

5. Guaranteed by characterization.

Capacitance

Symbol	Parameter	Conditions	T_A = –40°C to +85°C			Units	Figure Number
			Min.	Typ.	Max.		
C_{IN}	Control Pin Input Capacitance	V_{CC} = 0V		1.5		pF	Figure 16
C_{ON}	$D1_n$, $D2_n$, Dn On Capacitance	V_{CC} = 3.3, $\overline{OE}$ = 0V		3.7		pF	Figure 15
C_{OFF}	$D1_n$, $D2_n$ Off Capacitance	V_{CC} and $\overline{OE}$ = 3.3		2.5		pF	Figure 16

© 2006 Fairchild Semiconductor Corporation

Microchip Ex. 1068, p. 5
Microchip v. Aptiv
IPR2024-00230

Typical Characteristics

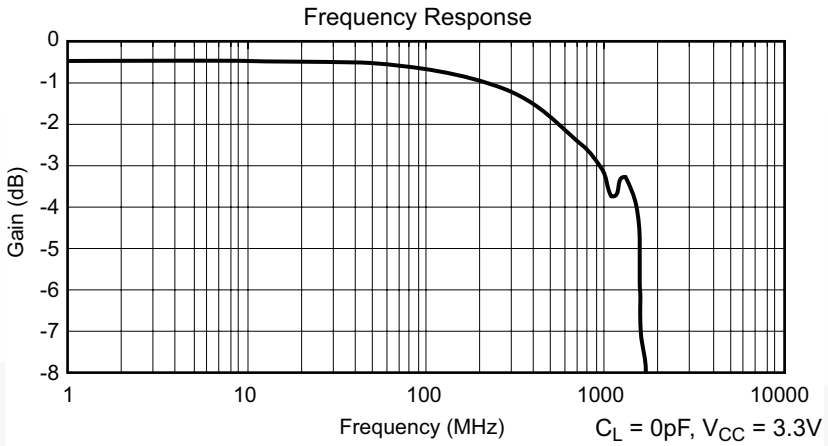

Figure 2. Gain vs. Frequency

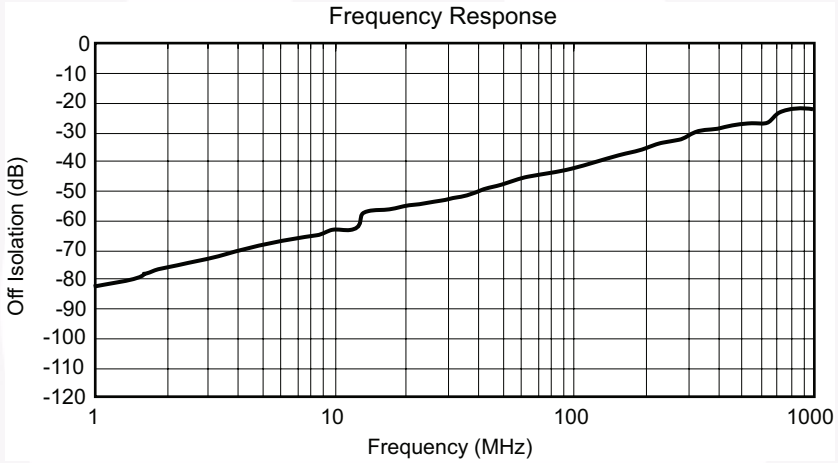

Figure 3. Off Isolation

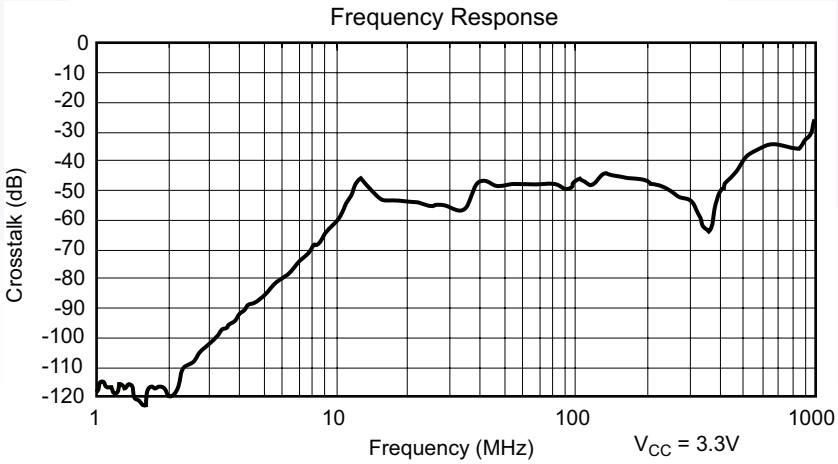

Figure 4. Crosstalk

Microchip Ex. 1068, p. 6
Microchip v. Aptiv
IPR2024-00230

Test Diagrams

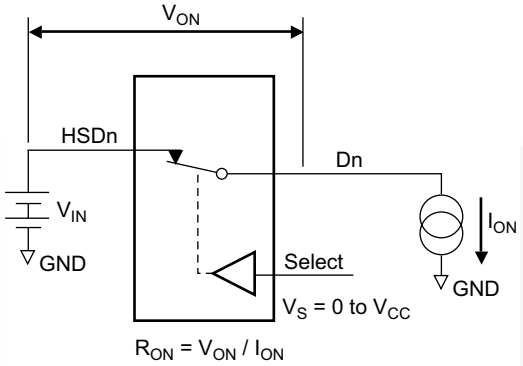

Figure 5. On Resistance

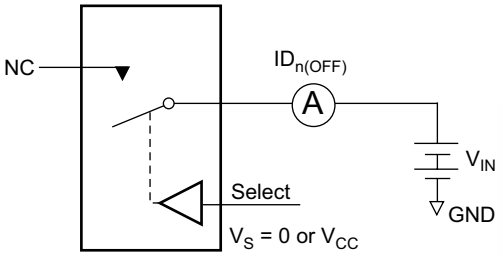

Each switch port is tested separately.

Figure 6. Off Leakage

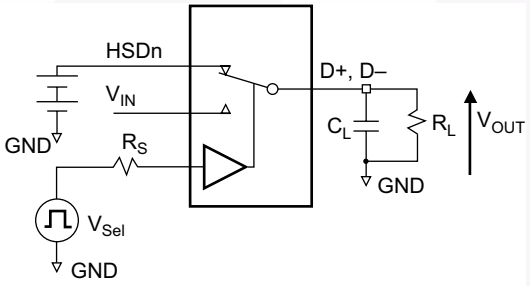

R_L, R_S, and C_L are functions of the application environment (see AC Electrical tables for specific values).

C_L includes test fixture and stray capacitance.

Figure 7. AC Test Circuit Load

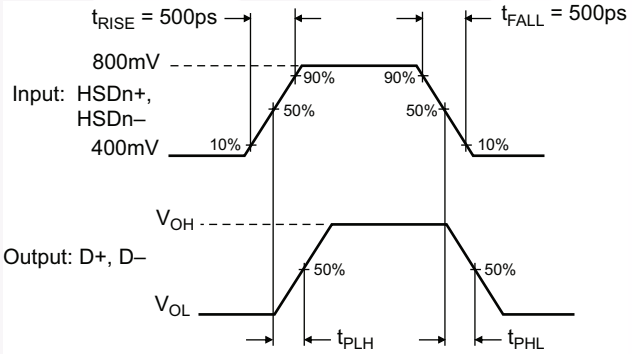

Figure 8. Switch Propagation Delay Waveforms

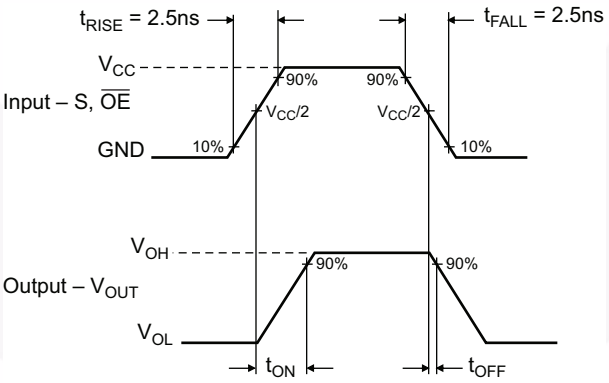

Figure 9. Turn-On / Turn-Off Waveform

Microchip Ex. 1068, p. 7
Microchip v. Aptiv
IPR2024-00230

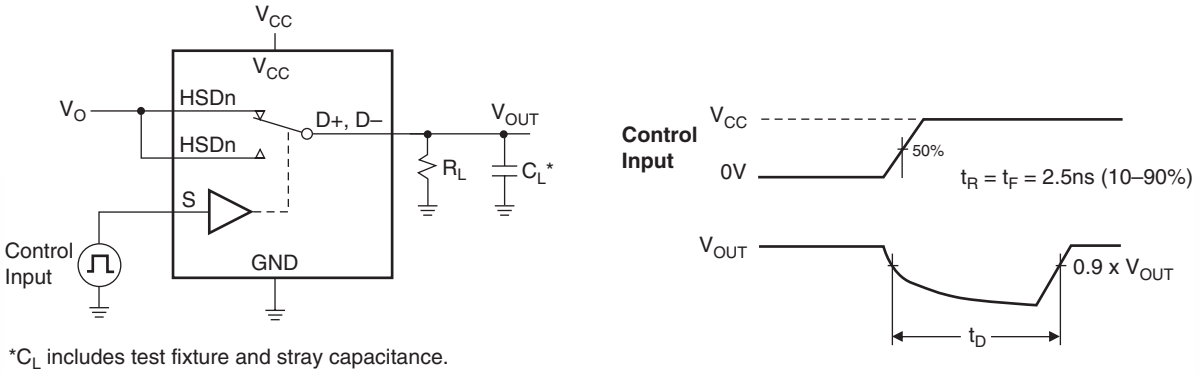

*C_L includes test fixture and stray capacitance.

Figure 10. Break-Before-Make (t_{BBM})

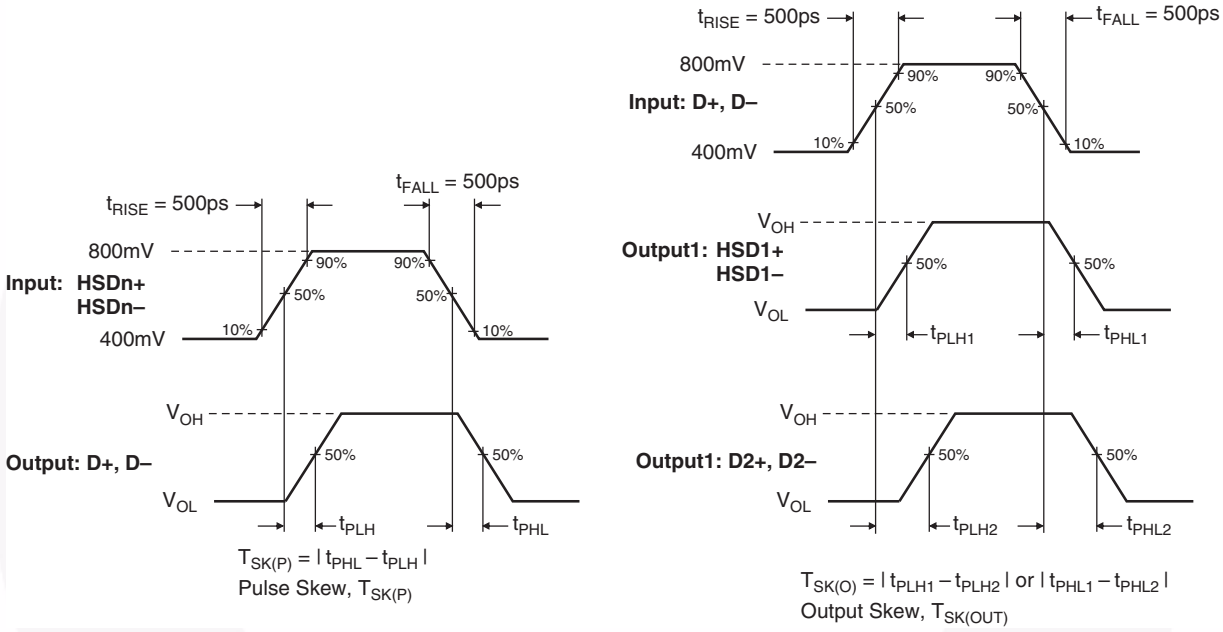

Figure 11. Switch Skew Tests

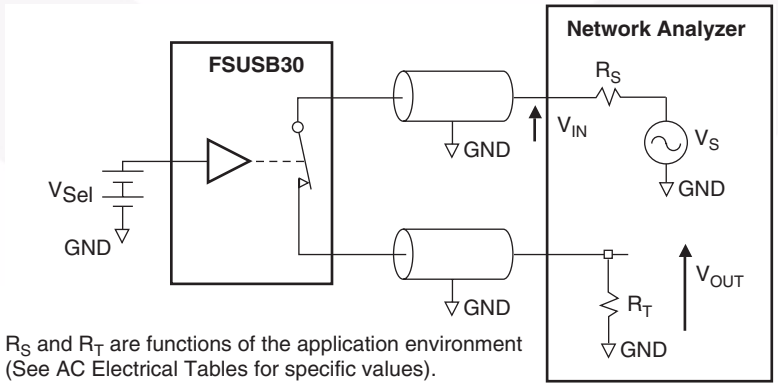

R_S and R_T are functions of the application environment (See AC Electrical Tables for specific values).

Figure 12. Bandwidth

Microchip Ex. 1068, p. 8
Microchip v. Aptiv
IPR2024-00230

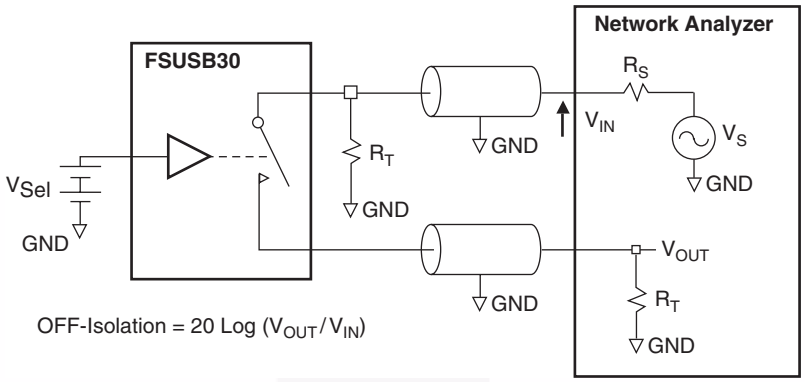

Figure 13. Channel Off Isolation

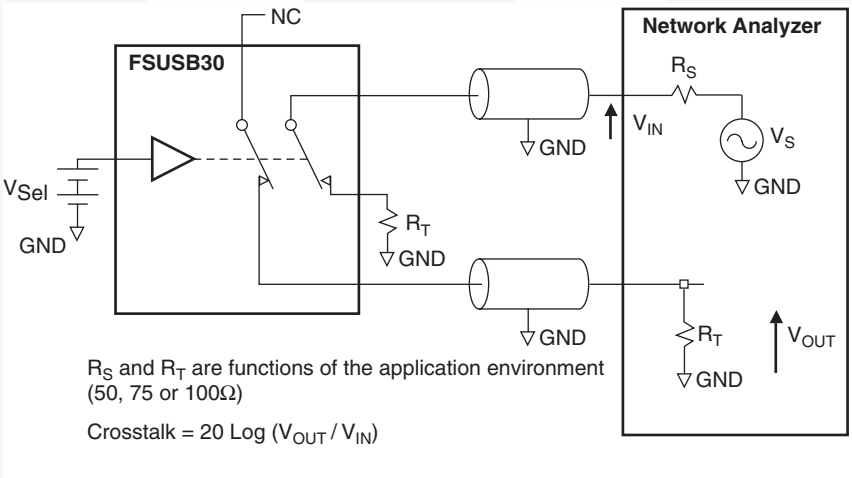

Figure 14. Non-Adjacent Channel-to-Channel Crosstalk

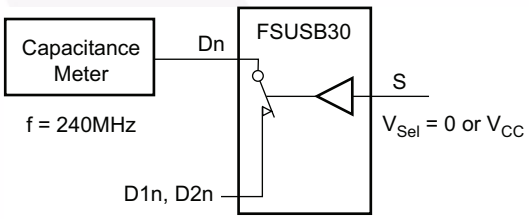

Figure 15. Channel On Capacitance

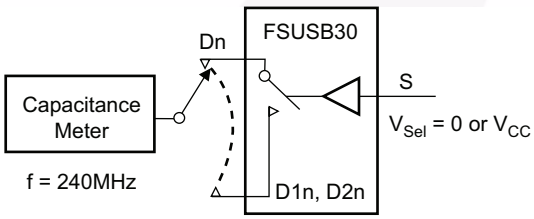

Figure 16. Channel Off Capacitance

© 2006 Fairchild Semiconductor Corporation

Microchip Ex. 1068, p. 9
Microchip v. Aptiv
IPR2024-00230

Application Guidance: Meeting USB 2.0 Vbus Short Requirements

In section 7.1.1 of the USB 2.0 specification, it notes that USB devices must be able to withstand a Vbus short to D+ or D- when the USB devices is either powered off or powered on. The FSUSB30 can be successfully configured to meet both these requirements.

Power-Off Protection

For a Vbus short circuit, the switch is expected to withstand such a condition for at least 24 hours. The FSUSB30 has specially designed circuitry which prevents unintended signal bleed through as well as guaranteed system reliability during a power-down, over-voltage condition. The protection has been added to the common pins (D+, D-).

Power-On Protection

The USB 2.0 specification also notes that the USB device should be capable of withstanding a Vbus short during transmission of data. Fairchild recommends adding a 100Ω series resister between the switch VCC pin and supply rail to protect against this case. This modification works by limiting current flow back into the V_{CC} rail during the over-voltage event so current remains within the safe operating range. In this application, the switch passes the full 5.25V input signal through to the selected output, while maintaining specified off isolation on the un-selected pins.

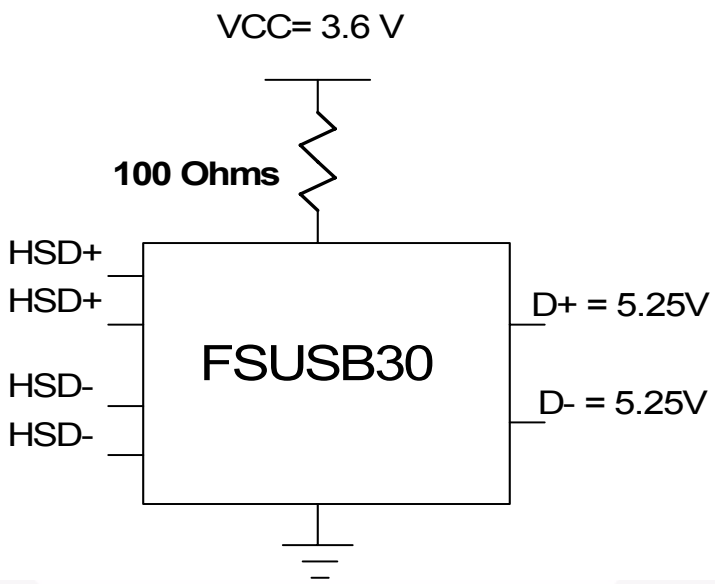

Figure 17. Adding 100Ω resistor in series with the V_{CC} supply allows the FSUSB30 to withstand a Vbus short when powered up

For more information, see Applications Note *AN-6022 Using the FSUSB30 to Comply with USB 2.0 Fault Condition Requirements* at www.fairchildsemi.com

Microchip Ex. 1068, p. 10
Microchip v. Aptiv
IPR2024-00230

Tape and Reel Specifications

Tape Format for DQFN

Package Designator	Tape Section	Number Cavities	Cavity Status	Cover Tape Status
BQX	Leader (Start End)	125 (typ)	Empty	Sealed
	Carrier	2500/3000	Filled	Sealed
	Trailer (Hub End)	75 (typ)	Empty	Sealed

Tape Dimensions

Dimenions are in millimeters unless otherwise specified.

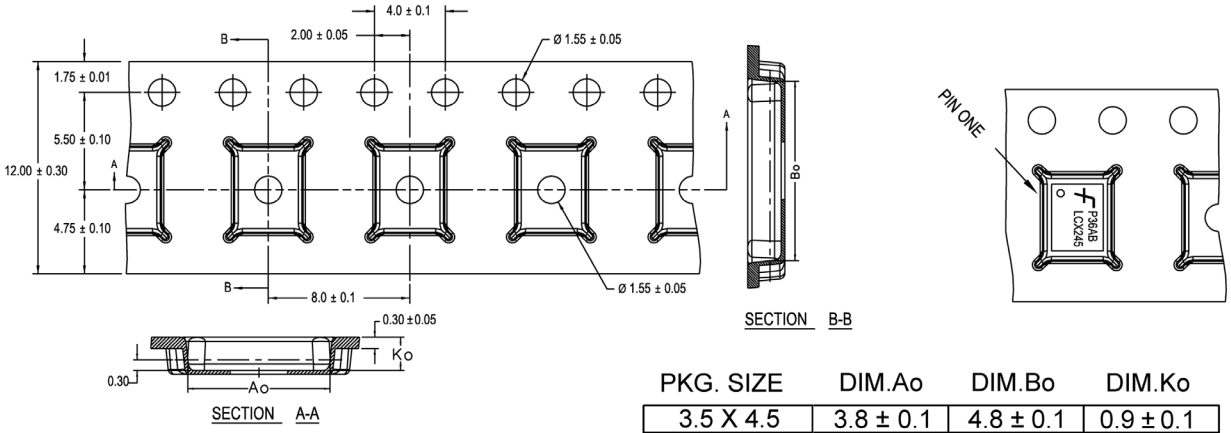

PKG. SIZE	DIM.Ao	DIM.Bo	DIM.Ko
3.5 X 4.5	3.8 ± 0.1	4.8 ± 0.1	0.9 ± 0.1
3.0 X 3.0	3.3 ± 0.1	3.3 ± 0.1	0.9 ± 0.1
2.5 X 4.5	2.8 ± 0.1	4.8 ± 0.1	0.9 ± 0.1
2.5 X 3.5	2.8 ± 0.1	3.8 ± 0.1	0.9 ± 0.1
2.5 X 3.0	2.8 ± 0.1	3.3 ± 0.1	0.9 ± 0.1
2.5 X 2.5	2.8 ± 0.1	2.8 ± 0.1	0.9 ± 0.1

DIMENSIONS ARE IN MILLIMETERS

NOTES: unless otherwise specified

1. Cummulative pitch for feeding holes and cavities (chip pockets) not to exceed 0.008[0.20] over 10 pitch span.
2. Smallest allowable bending radius.
3. Thru hole inside cavity is centered within cavity.
4. Tolerance is ±0.002[0.05] for these dimensions on all 12mm tapes.
5. Ao and Bo measured on a plane 0.120[0.30] above the bottom of the pocket.
6. Ko measured from a plane on the inside bottom of the pocket to the top surface of the carrier.
7. Pocket position relative to sprocket hole measured as true position of pocket. Not pocket hole.
8. Controlling dimension is millimeter. Diemension in inches rounded.

© 2006 Fairchild Semiconductor Corporation

Microchip Ex. 1068, p. 11
Microchip v. Aptiv
IPR2024-00230

Reel Dimensions for DQFN

Dimensions are in inches (millimeters) unless otherwise specified.

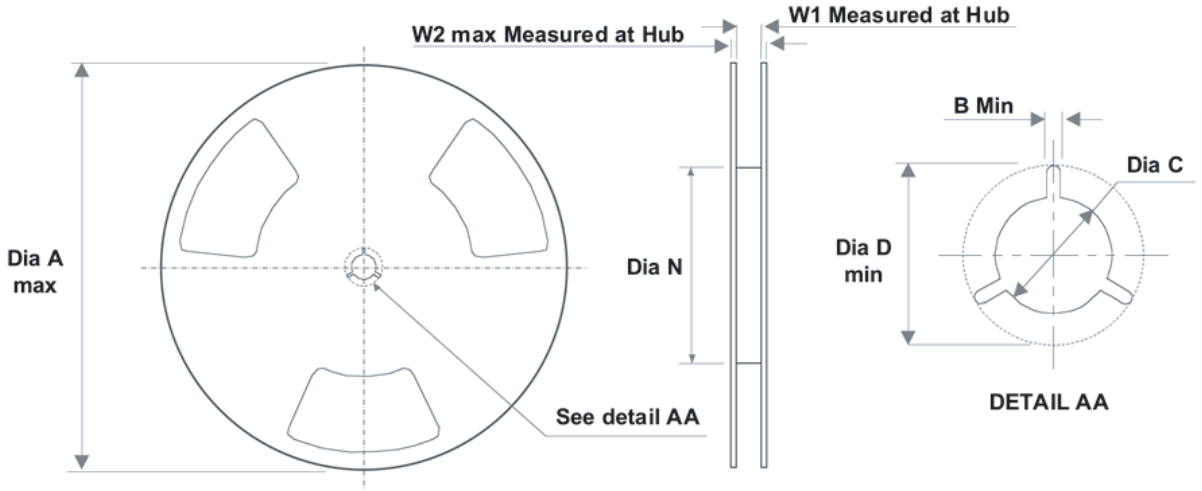

Tape Size	A	B	C	D	N	W1	W2
(12mm)	13.0 (330)	0.059 (1.50)	0.512 (13.00)	0.795 (20.20)	7.008 (178)	0.488 (12.4)	0.724 (18.4)

Microchip Ex. 1068, p. 12
Microchip v. Aptiv
IPR2024-00230

Tape Dimensions for MSOP

Dimensions are in inches (millimeters) unless otherwise specified.

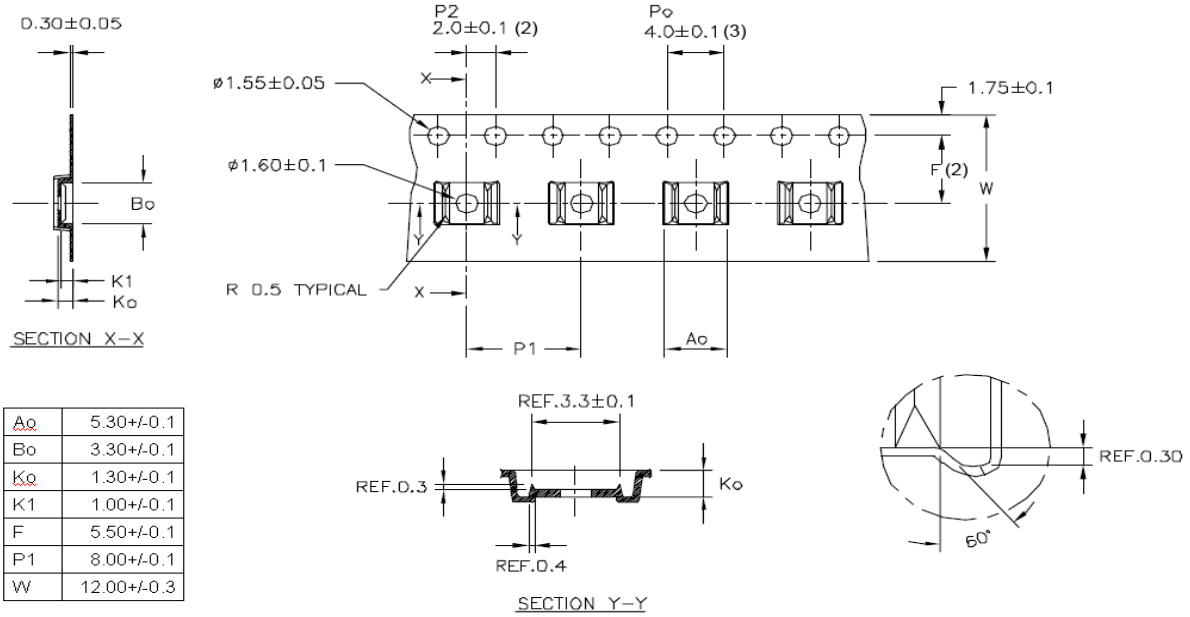

Ao	5.30+/-0.1
Bo	3.30+/-0.1
Ko	1.30+/-0.1
K1	1.00+/-0.1
F	5.50+/-0.1
P1	8.00+/-0.1
W	12.00+/-0.3

Notes:

1. All dimensions are in millimeters.
2. Measured from centerline of sprocket hole to centerline of pocket.
3. Cumulative tolerance of ten sprocket holes is ±0.20mm.
4. Other material available.

Reel Dimensions for MSOP

Dimensions are in inches (millimeters) unless otherwise specified

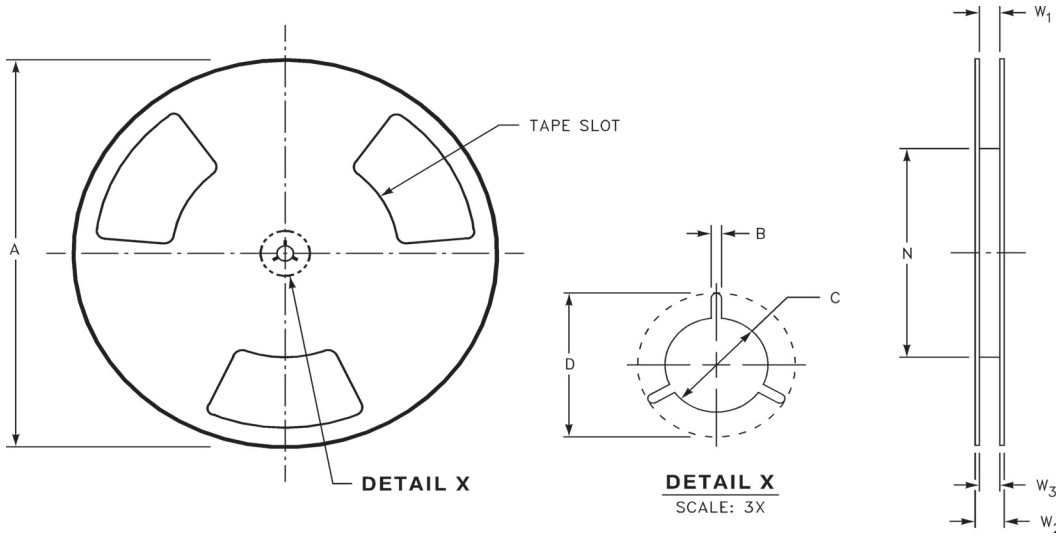

Tape Size	A	B	C	D	N	W1	W2	W3
(12mm)	13 (330)	0.059 (1.5)	0.512 (13)	0.795 (20.2)	7.008 (178)	0.448 (12.4)	0.724 (18.4)	0.468-0.606 (11.9 -15.4)

Microchip Ex. 1068, p. 13
Microchip v. Aptiv
IPR2024-00230

Physical Dimensions

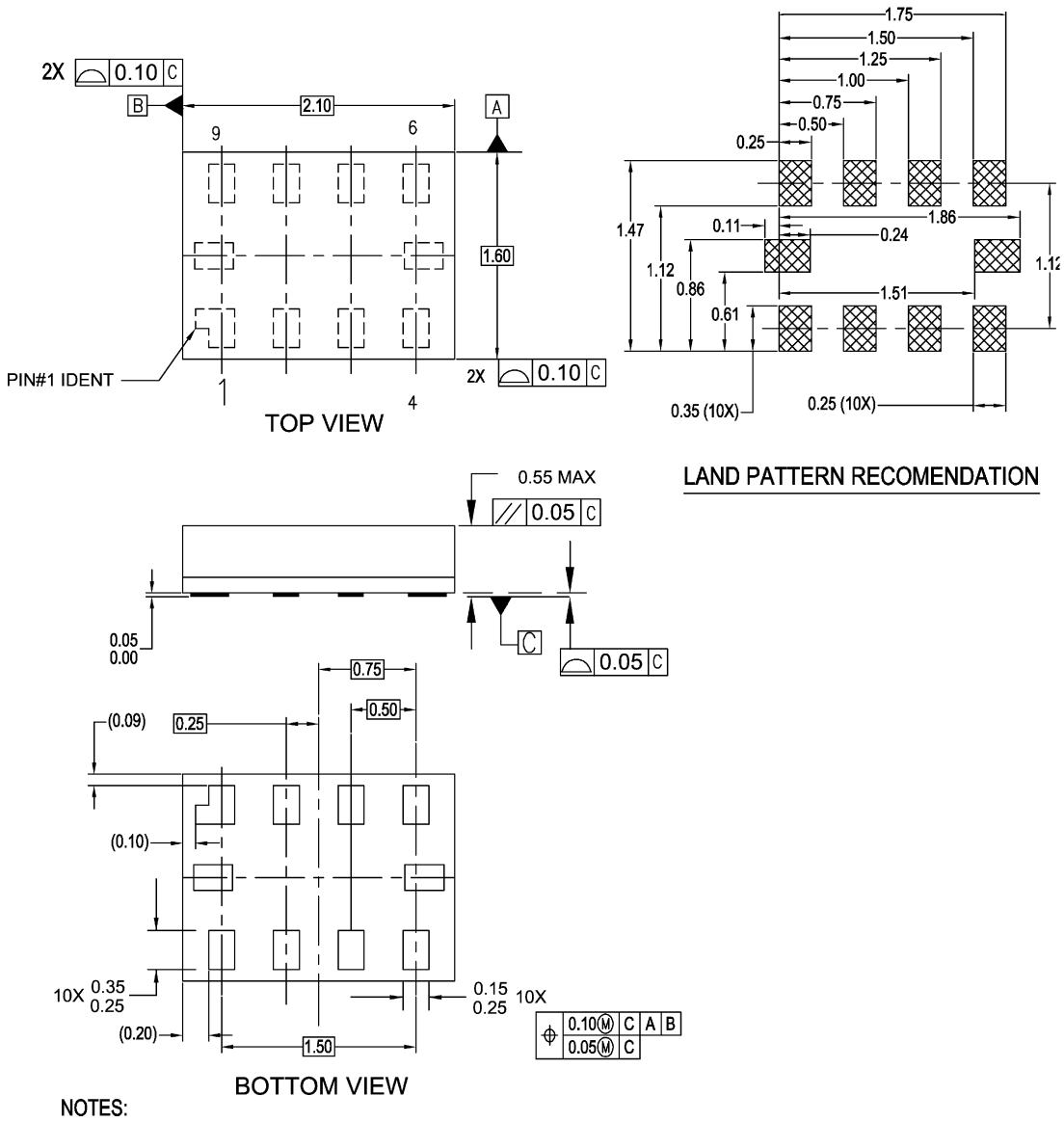

NOTES:

A. PACKAGE CONFORMS TO JEDEC MO255, VARIATION UABD

B. DIMENSIONS ARE IN MILLIMETERS.

C. DIMENSIONS AND TOLERANCES CONFORMS TO ASME Y14.5M, 1994.

MAC010ARevC

Figure 17. 10-Lead MicroPak, 1.6 x 2.1mm

For tape and reel specifications, visit Fairchild's website: http://www.fairchildsemi.com/products/logic/pdf/micropak_tr.pdf.

Package drawings are provided as a service to customers considering Fairchild components. Drawings may change in any manner without notice. Please note the revision and/or date on the drawing and contact a Fairchild Semiconductor representative to verify or obtain the most recent revision. Package specifications do not expand the terms of Fairchild's worldwide terms and conditions, specifically the warranty therein, which covers Fairchild products.

Always visit Fairchild Semiconductor's online packaging area for the most recent package drawings: http://www.fairchildsemi.com/packaging/.

Microchip Ex. 1068, p. 14
Microchip v. Aptiv
IPR2024-00230

Physical Dimensions

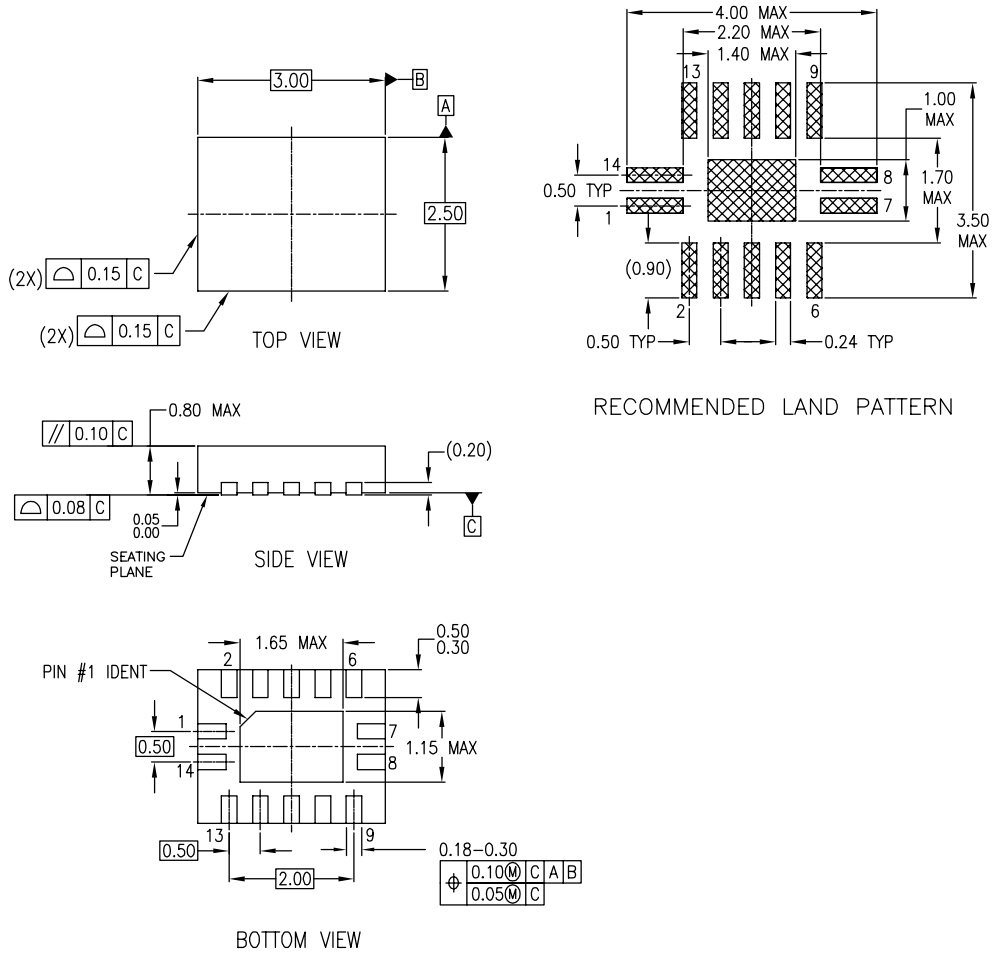

NOTES:

A. CONFORMS TO JEDEC REGISTRATION MO–241, VARIATION AA
B. DIMENSIONS ARE IN MILLIMETERS.
C. DIMENSIONS AND TOLERANCES PER ASME Y14.5M, 1994

MLP14ArevA

Figure 18. 14-Terminal De-populated Quad Very-Thin Flat Pack No Leads (DQFN), JEDEC MO-241, 2.5 x 3.0mm

Package drawings are provided as a service to customers considering Fairchild components. Drawings may change in any manner without notice. Please note the revision and/or date on the drawing and contact a Fairchild Semiconductor representative to verify or obtain the most recent revision. Package specifications do not expand the terms of Fairchild's worldwide terms and conditions, specifically the warranty therein, which covers Fairchild products.

Always visit Fairchild Semiconductor's online packaging area for the most recent package drawings: http://www.fairchildsemi.com/packaging/.

Microchip Ex. 1068, p. 15
Microchip v. Aptiv
IPR2024-00230

Physical Dimensions

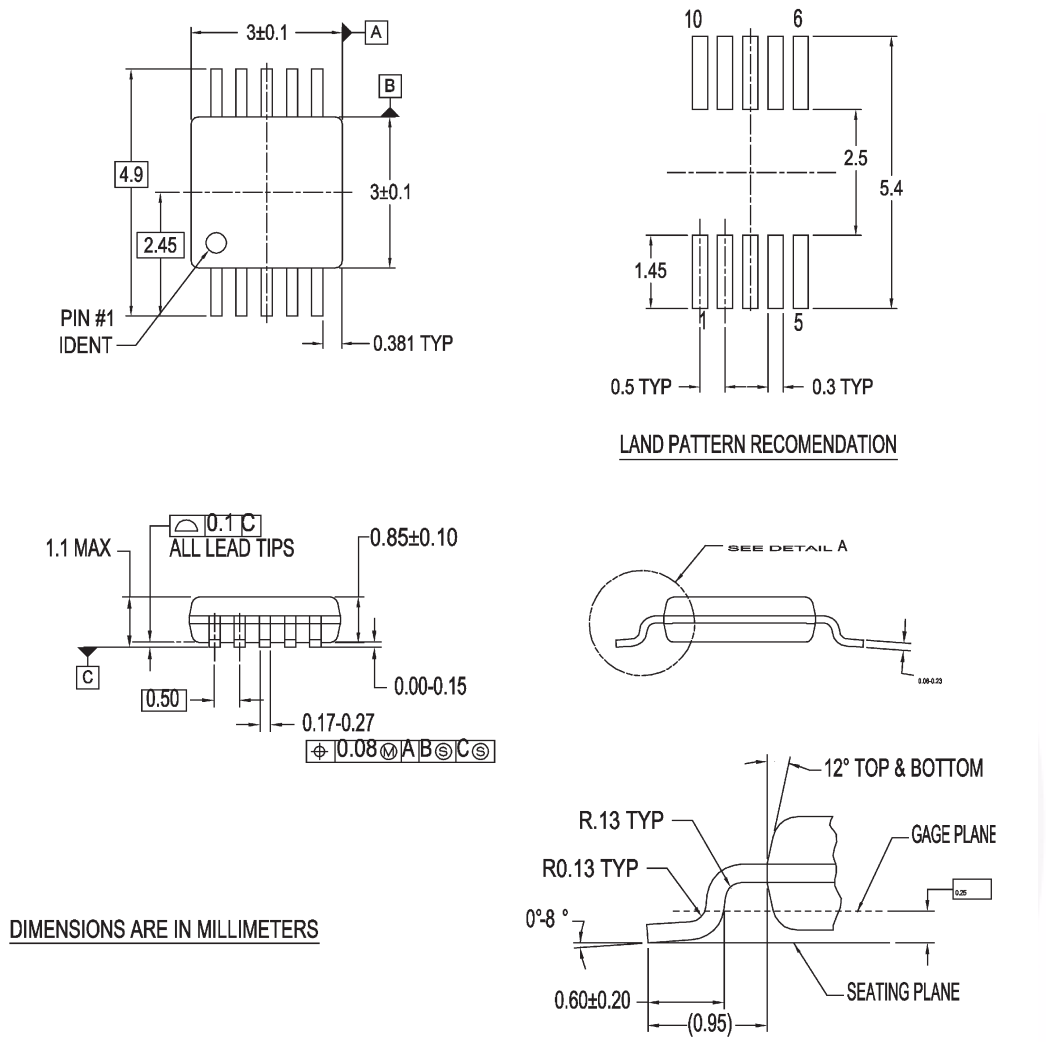

NOTES:

A. CONFORMS TO JEDEC REGISTRATION MO-187, VARIATION BA, REF NOTE 6, DATE 11/00.

B. DIMENSIONS ARE IN MILLIMETERS.

C. DIMENSIONS ARE EXCLUSIVE OF BURRS, MOLD FLASH, AND TIE BAR EXTRUSIONS.

D. DIMENSIONS AND TOLERANCES PER ASME Y14.5M, 1994.

MUA10AREVA

Figure 19. 10-Lead Molded Small Outline Package (MSOP), JEDEC MO-187, 3.0mm Wide

Package drawings are provided as a service to customers considering Fairchild components. Drawings may change in any manner without notice. Please note the revision and/or date on the drawing and contact a Fairchild Semiconductor representative to verify or obtain the most recent revision. Package specifications do not expand the terms of Fairchild's worldwide terms and conditions, specifically the warranty therein, which covers Fairchild products.

Always visit Fairchild Semiconductor's online packaging area for the most recent package drawings: http://www.fairchildsemi.com/packaging/.

Microchip Ex. 1068, p. 16
Microchip v. Aptiv
IPR2024-00230

Physical Dimensions

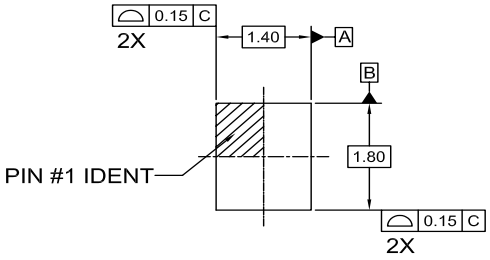

TOP VIEW

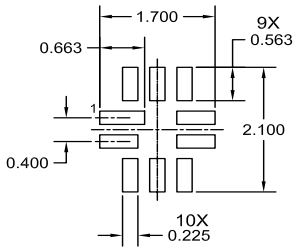

RECOMMENDED LAND PATTERN

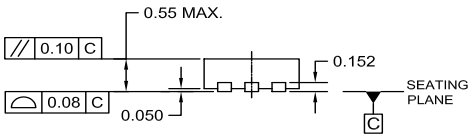

SIDE VIEW

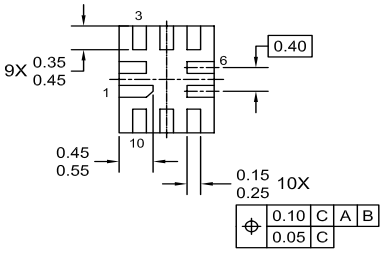

BOTTOM VIEW

NOTES:

A. DIMENSIONS ARE IN MILLIMETERS.

B. DIMENSIONS AND TOLERANCES PER ASME Y14.5M, 1994

UMLP10Arev1

Figure 20. 10-Lead, Quad, Ultrathin Molded Leadless Package (UMLP), 1.4 x 1.8mm

Package drawings are provided as a service to customers considering Fairchild components. Drawings may change in any manner without notice. Please note the revision and/or date on the drawing and contact a Fairchild Semiconductor representative to verify or obtain the most recent revision. Package specifications do not expand the terms of Fairchild's worldwide terms and conditions, specifically the warranty therein, which covers Fairchild products.

Always visit Fairchild Semiconductor's online packaging area for the most recent package drawings: http://www.fairchildsemi.com/packaging/.

Microchip Ex. 1068, p. 17
Microchip v. Aptiv
IPR2024-00230

FAIRCHILD SEMICONDUCTOR®

TRADEMARKS

The following includes registered and unregistered trademarks and service marks, owned by Fairchild Semiconductor and/or its global subsidiaries, and is not intended to be an exhaustive list of all such trademarks.

Build it Now™
CorePLUS™
CorePOWER™
CROSSVOLT™
CTL™
Current Transfer Logic™
EcoSPARK®
EfficentMax™
EZSWITCH™ *
EZ™
F®
Fairchild®
Fairchild Semiconductor®
FACT Quiet Series™
FACT®
FAST®
FastvCore™
FlashWriter®*
FPS™
F-PFS™
FRFET®
Global Power Resource℠
Green FPS™
Green FPS™ e-Series™
GTO™
IntelliMAX™
ISOPLANAR™
MegaBuck™
MICROCOUPLER™
MicroFET™
MicroPak™
MillerDrive™
MotionMax™
Motion-SPM™
OPTOLOGIC®
OPTOPLANAR®
®
PDP SPM™
Power-SPM™
PowerTrench®
Programmable Active Droop™
QFET®
QS™
Quiet Series™
RapidConfigure™
™
Saving our world, 1mW/W/kW at a time™
SmartMax™
SMART START™
SPM®
STEALTH™
SuperFET™
SuperSOT™-3
SuperSOT™-6
SuperSOT™-8
SupreMOS™
SyncFET™
SYSTEM GENERAL®
The Power Franchise®
the power franchise
TinyBoost™
TinyBuck™
TinyLogic®
TINYOPTO™
TinyPower™
TinyPWM™
TinyWire™
µSerDes™
µSerDes™
UHC®
Ultra FRFET™
UniFET™
VCX™
VisualMax™

* EZSWITCH™ and FlashWriter® are trademarks of System General Corporation, used under license by Fairchild Semiconductor.

DISCLAIMER

FAIRCHILD SEMICONDUCTOR RESERVES THE RIGHT TO MAKE CHANGES WITHOUT FURTHER NOTICE TO ANY PRODUCTS HEREIN TO IMPROVE RELIABILITY, FUNCTION, OR DESIGN. FAIRCHILD DOES NOT ASSUME ANY LIABILITY ARISING OUT OF THE APPLICATION OR USE OF ANY PRODUCT OR CIRCUIT DESCRIBED HEREIN; NEITHER DOES IT CONVEY ANY LICENSE UNDER ITS PATENT RIGHTS, NOR THE RIGHTS OF OTHERS. THESE SPECIFICATIONS DO NOT EXPAND THE TERMS OF FAIRCHILD'S WORLDWIDE TERMS AND CONDITIONS, SPECIFICALLY THE WARRANTY THEREIN, WHICH COVERS THESE PRODUCTS.

LIFE SUPPORT POLICY

FAIRCHILD'S PRODUCTS ARE NOT AUTHORIZED FOR USE AS CRITICAL COMPONENTS IN LIFE SUPPORT DEVICES OR SYSTEMS WITHOUT THE EXPRESS WRITTEN APPROVAL OF FAIRCHILD SEMICONDUCTOR CORPORATION.

As used herein:

1. Life support devices or systems are devices or systems which, (a) are intended for surgical implant into the body or (b) support or sustain life, and (c) whose failure to perform when properly used in accordance with instructions for use provided in the labeling, can be reasonably expected to result in a significant injury of the user.
2. A critical component in any component of a life support, device, or system whose failure to perform can be reasonably expected to cause the failure of the life support device or system, or to affect its safety or effectiveness.

ANTI-COUNTERFEITING POLICY

Fairchild Semiconductor Corporation's Anti-Counterfeiting Policy. Fairchild's Anti-Counterfeiting Policy is also stated on our external website, www.fairchildsemi.com, under Sales Support.

Counterfeiting of semiconductor parts is a growing problem in the industry. All manufacturers of semiconductor products are experiencing counterfeiting of their parts. Customers who inadvertently purchase counterfeit parts experience many problems such as loss of brand reputation, substandard performance, failed applications, and increased cost of production and manufacturing delays. Fairchild is taking strong measures to protect ourselves and our customers from the proliferation of counterfeit parts. Fairchild strongly encourages customers to purchase Fairchild parts either directly from Fairchild or from Authorized Fairchild Distributors who are listed by country on our web page cited above. Products customers buy either from Fairchild directly or from Authorized Fairchild Distributors are genuine parts, have full traceability, meet Fairchild's quality standards for handling and storage and provide access to Fairchild's full range of up-to-date technical and product information. Fairchild and our Authorized Distributors will stand behind all warranties and will appropriately address any warranty issues that may arise. Fairchild will not provide any warranty coverage or other assistance for parts bought from Unauthorized Sources. Fairchild is committed to combat this global problem and encourage our customers to do their part in stopping this practice by buying direct or from authorized distributors.

PRODUCT STATUS DEFINITIONS

Definition of Terms

Datasheet Identification	Product Status	Definition
Advance Information	Formative / In Design	Datasheet contains the design specifications for product development. Specifications may change in any manner without notice.
Preliminary	First Production	Datasheet contains preliminary data; supplementary data will be published at a later date. Fairchild Semiconductor reserves the right to make changes at any time without notice to improve design.
No Identification Needed	Full Production	Datasheet contains final specifications. Fairchild Semiconductor reserves the right to make changes at any time without notice to improve the design.
Obsolete	Not In Production	Datasheet contains specifications on a product that is discontinued by Fairchild Semiconductor. The datasheet is for reference information only.

Rev. I36

Microchip Ex. 1068, p. 18
Microchip v. Aptiv
IPR2024-00230