MICROCHIP
Microchip Technology, Inc.

Microchip Technology, Incorporated
2355 W. Chandler Boulevard
Chandler, Arizona 85224
480/792-7467

REV	DATE	CN #	ORIGINATOR	DESCRIPTION OF CHANGE
A	7/16/2015		Dave Sroka	Initial Release
B	8/18/2015		Dave Sroka	**Moved to .95 release**
Clean Room Distribution:			Regular Distribution:	Electronic Distribution: PBP

CONFIDENTIAL

EX.
25
C.A. No.17-1194-JDW

Table of Contents

Contents

TABLE OF CONTENTS 2
1 EXECUTIVE SUMMARY 3
2 OBJECTIVES 4
3 TARGET APPLICATION: HANDSET INTEGRATION WITH AUTOMOTIVE INFOTAINMENT 5
4 USB AUTOMOTIVE HUB ROADMAP 7
4.1 Sandia Product Family 10
4.2 Differentiating Features 11
4.3 Sandia Product Schedule 12
4.4 Sandia Block Diagram 14
4.5 Manufacturing, Firmware, and Tool Support 15
5 TARGET MARKETS AND STRATEGY 16
5.1 Product Position Statement 16
5.2 Target Market, TAM and SAM Analysis 16
5.3 Product Strategy 17
5.4 Competition 18
5.5 Pricing 19
6 KEYS TO SUCCESS 20
7 RISKS 21
8 FOM DISCUSSION 22
8.1 FOM Sensitivity Analysis 23
8.2 FOM Input Sheet, PBP and Die Size Spreadsheets 24
9 REVISION HISTORY DETAILS 26

CONFIDENTIAL

Product Type: USB2 Automotive Hubs

1 Executive Summary

The automotive infotainment market is currently undergoing significant change, as mobile handsets become more tightly integrated with infotainment head units. Both Apple and Google have introduced specifications, CarPlay and Android Auto, respectively, whereby the graphical user interfaces of their phones can be displayed on the head unit. This integration utilizes USB as the primary physical layer to enable this transfer.

Miles Johnson, Hyundai Motors, Connected Car captures this shift in recent comments, **"Your car can't always support new devices out there. CarPlay and Android Auto solves this because it's plug-and-play with a USB cable…….let's face it, Apple nails the interface. A person touches their phone 150 times a day, so when a car can offer the same layout — it's more comfortable, intuitive and cuts down on driver distraction."**

The market growth potential as outlined by IHS Automotive analyst predicts a 5 year CAGR of 210%, resulting in over 94MU of CarPlay shipments in MY2020 (vehicle model years and financial years are roughly equivalent). UNG has judged this estimate down to 42MU of CarPlay shipments in MY 2020.

This PBP outlines the Sandia project which will output 5 products that cover the head unit port requirements and usage needs of automotive OEMs. All 5 products will be produced from a single die. Two unique architectures; Multi-Host Device Controller (MHDC) and Dual UpSTream (DUST) hubs will be implemented from a single die, generated from the Sandia project. These parts implement USB functionality in new combinations and with patented technology that provide single chip solutions that reduce BOM cost and board area in break-out-boxes (BOB) systems.

The development costs of Sandia are $4.5M, generating +$115M of sales between FY18-FY22, and represent market penetration of the served aggregate market (SAM) between 25-33% in the MY19 –MY21. With an overall NPV above $45M and break-even point of 49 months, the return on investment is significant. Further, a high level of confidence is associated with the plan based upon Microchips current automotive hub business and relations, the re-use of proven intellectual property, and interface with Fiat Chrysler Automotive as a lead customer, early adopter. Overall gross margin on sales from Sandia products is projected at +80%.

In summary, the Sandia project is a targeted automotive program. It addresses a substantial market, driven by tighter integration of the mobile handset with vehicle infotainment systems. The configuration needs of CarPlay systems and automotive head units require unique functionality that complements Microchips USB expertise and intellectual property, providing an outstanding opportunity for significant sales with excellent profitability.

RESTRICTED - ATTORNEY EYES ONLY

Microchip_004575

Aptiv Exhibit 2026 Page 3
Microchip v. Aptiv IPR2024-00230

2 Objectives

Overall objectives of the project include:

- Single project that outputs two chip families that address the USB hub architectural needs of the automotive break-out-box (BOB) and Head Units
  - Multi-Host Device Controller (MHDC)
  - Dual Up-STream hub (DUST)
- Provide single chip solutions to grow Microchip's BOB USB penetration and increase revenue as the market volume ramps for CarPlay and Android Auto
- Produce a single chip that is automotive grade (AEC-Q100), USB compliant, Android Auto, and Apple CarPlay compliant which can be packaged for either MHDC or DUST applications
- Enable all USB ports in a media break-out-box to remain active data ports when a CarPlay session is active.
- Demonstrate to customers in the 2H15 timeframe, an FPGA proof of concept for the Multi-Host Device Controller (MHDC)
- Demonstrate Dual Up-Stream hub application with evaluation board set-up in 2H15

Major Family Feature Requirements

- USB2.0 Hi-Speed performance
- Multi-Host capability with device end-point bridging
- Guaranteed 100 Mbps CarPlay bandwidth for CarPlay enabled port
- Guaranteed 5 mS CarPlay latency
- USB to I2C bridging for CarPlay authentication
- FlexConnect on 4 ports of a 5 port hub, with the fifth port being a standard downstream port
- Enable CarPlay on multi-ports without the use of external switches
- OTG on one upstream ports
- Bridging capabilities for I2C, I2S, SPI, UART, and GPIO

- Battery Charging 1.2, Apple, and China
- C Connector Command packet via I2C for protocol discovery, CC pin power discovery, and voltage / current monitoring
- Support Commercial, Industrial and Extended ambient temperature
- Support Automotive Grade solution – PPAP, AEC-Q100

Note: USB3 is not a requirement, as the CarPlay specification does not include it. Considering USB3 limitations with cable length, Apple's concern with signal integrity and the optimal user experience, and the fact that no handsets are available with USB3, this status is understandable. Microchip has reached out to Apple regarding their plans for future revisions / directions, but has not received a response. The Sandia architecture is being designed for a straight-forward revision to USB3 should it be required.

3 Target Application: Handset integration with Automotive Infotainment

With the emergence of connectivity specifications by consumer and mobile companies that target integration with automobile infotainment systems, such as Apple's CarPlay and Google's Android Auto, the interaction of the consumer products and automotive infotainment systems has begun. Whereas USB in the car has been primarily used for charging and mass storage applications, these new initiatives target tight integration of their products with the infotainment systems.

In the case of Apple's CarPlay, a subset of the GUI applications is presented to the driver on the infotainment screen. Applications are screened for their appropriateness to the car environment (ie. No video). The end result being that the infotainment system is transformed to an Apple ecosystem of applications and icons that is tightly integrated to the car infrastructure. This brings the benefits of:

- Increased familiarity of applications
- Improved portability of user content
- Higher driver safety
- Upgradeability of the infotainment system for new applications and functions

It is important to note that upgradeability is easily provided, as the mobile handset becomes the USB host. As the host, any necessary drivers or firmware can be downloaded wirelessly via a cellular or Wifi network. The end result is that the number of applications will likely increase for the automotive environment. For example, car operational and diagnostic data could be sent to the handset from the car, and applications run to provide information on performance or maintenance status. Similiarly one could project that the break-out box functionality will continue to evolve with back-seat connectivity to displays units placed in the backward facing side of the front-seats.

USB provides the physical layer that is required for connecting the mobile handset to the head-unit. The USB implementation for this operation is targeted for the media break-out–box, located between the front seats. In addition, it has been noted by Chrysler that their intent is to place CarPlay enabled break-out-boxes in each row of their mini-vans and sports utility vehicles (SUVs).

RESTRICTED - ATTORNEY EYES ONLY

Microchip_004577

Aptiv Exhibit 2026 Page 5
Microchip v. Aptiv IPR2024-00230

Extracted from Apple website; https://www.apple.com/ios/carplay/

Control with a word. Or a touch. Or a twist.

CarPlay features Siri voice control and is specially designed for driving scenarios. It also works with your car's controls — knobs, buttons, or touchscreen. And the apps you want to use in the car have been reimagined, so you can use them while your eyes and hands stay where they belong.

Voice

To activate Siri voice control, just press / hold the voice control button on the steering wheel.

Touch

If your CarPlay-equipped vehicle has a touchscreen, you can use it to control CarPlay.

Knobs and Controls

CarPlay works with the knobs, dials, or buttons in the car. If it controls your screen, it controls CarPlay.

CONFIDENTIAL

4 USB Automotive Hub Roadmap

Silicon Roadmap for USB Automotive Support:

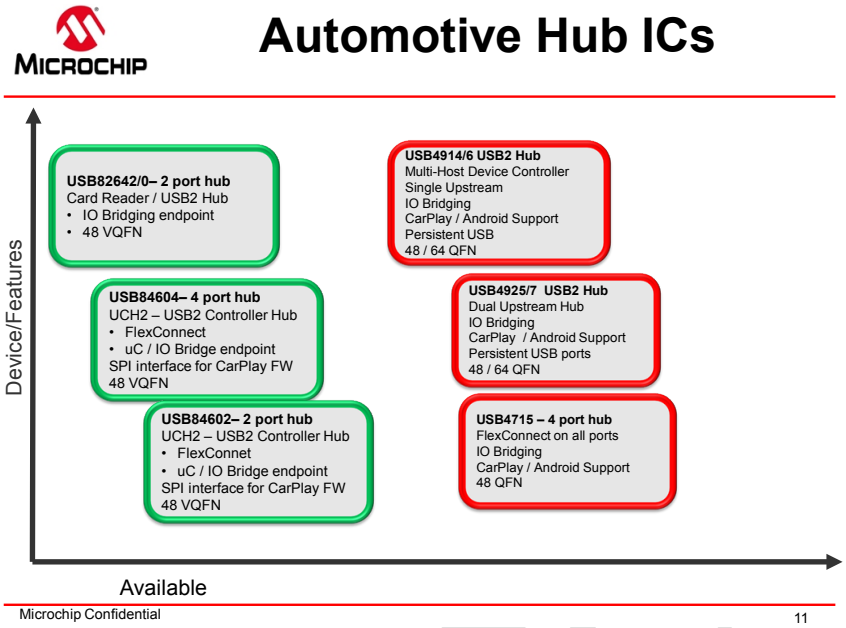

Currently Microchip UNG enjoys a strong position in the automotive segment driven by its production offering of automotive grade transceivers, switches, hubs and card readers. As illustrated in the USB Automotive Hub roadmap, Card Readers (USB82642/82640) and USB2 Smart Hub (UCH 2 - USB84604/2) are now shipping.

The head-unit USB configuration and usage requirements are critical to the silicon solution that is chosen for implementation. The following configurations represent the architectures being designed today and capture the head-unit port needs and USB functionality requirements.

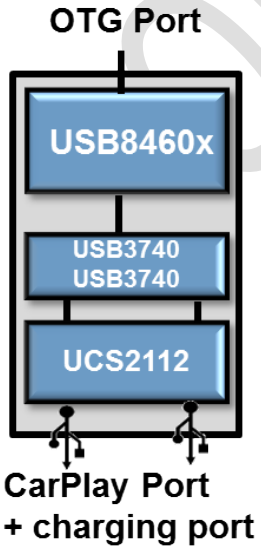

In the configuration above, the head-unit must have an OTG port available. OTG is needed as it can provide USB Host and USB Device functionality which is mandated for CarPlay. In this system Microchip's patented, FlexConnect technology, along with external USB switches (USB3740) provide for CarPlay on either of the hub's down facing ports. When CarPlay is active the other port can be used for charging but no USB data functions are possible. This port is considered to have non-persistent USB functionality.

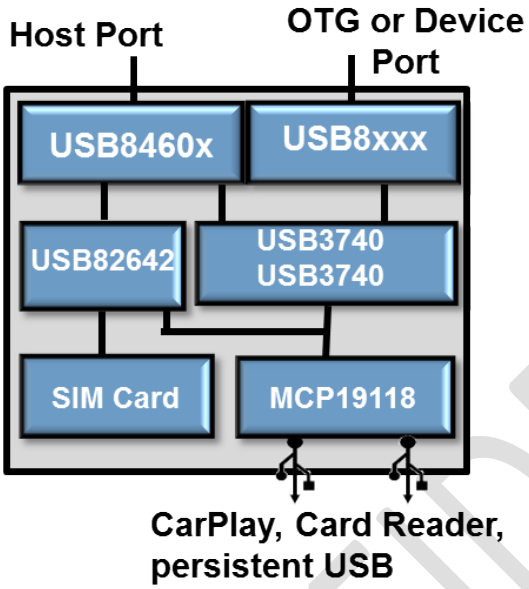

Having ports that were not capable of persistent USB data functions was not favored by many automotive OEMs due to the need to update maps from various secondary sources. As a result, the device partition above was deployed with a number of OEMs. In this architecture, two upstream ports are utilized; the first being a host port to enable the card reader, as well as the down-facing hub port that is not being utilized for CarPlay, and the second to provide a dedicated path to the head-unit for CarPlay. Although this architecture meets the overall system needs of USB persistence and has the benefit of guaranteeing a dedicated path to the head-unit for CarPlay, the fact that it requires two upstream ports has drawbacks. These include two differential pair cables, two head-unit ports to support the media BoB, and a larger BOM driven by the two USB paths.

CONFIDENTIAL

The third configuration, as outlined below, takes a different approach where the head unit port is always a USB Host, and where USB persistence is maintained on all the media BoB ports.

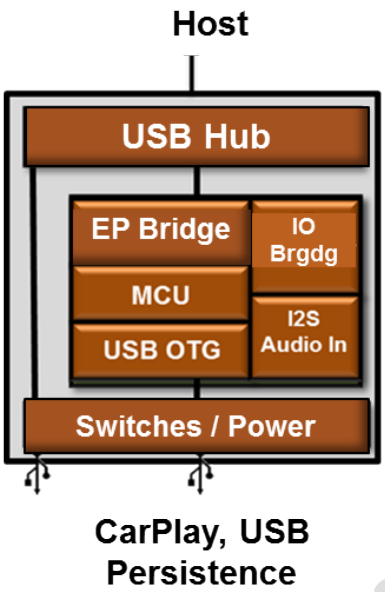

In this unique architecture, the Apple iPhone which is a USB Host communicates to a USB device end-point (EP) in the chip. This end-point is mirrored to another USB device end-point while the USB transaction protocol is correlated. As illustrated below, the end result is that Multiple USB Hosts execute the USB transaction, and hence the name, Multi-Host Device controller. Note Delphi is offering a solution with similar capabilities, and has garnered a substantial portion of the media break-out-box market.

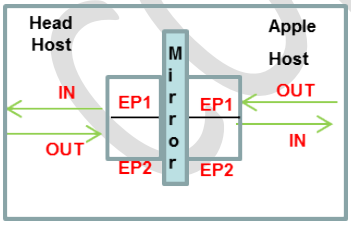

This architecture has the advantage of utilizing a single USB path and hence a single port and normal USB cable, which all contribute to an optimal BOM. In addition, the head-unit is always a USB host, which promotes easier system implementation and maintenance. Note, Microchip holds the following patents which may be relevant for this MHDC implementation, U.S. Pat. Nos. 7,523,243 and 7,627,708.

CONFIDENTIAL

4.1 Sandia Product Family

To summarize the technical and usage needs, the following table provides an overview of the key aspects of the solutions and highlights the features of the Sandia new chip families.

Solution Type	Persistent USB	Upstream/ Head Unit Ports	OTG Needed	Cabling	Comment
USB84604	No	1	Yes	Standard	In-Production and accepted by many who do not require persistent USB during CarPlay
Dual Upstream Discrete	Yes	2	Yes	Custom	Is being deployed but cost prohibitive
Dual Upstream Integrated	Yes	2	Yes	Custom	Provides cost reduced path for discrete implementation
MHDC	Yes	1	No	Standard	Optimal solution

In order to cover the maximum market size, provide ASP (average selling price) flexibility, and optimize gross margins, a number of part types will be output with varying number of downstream ports. Because the attach-rate for the card reader function is declining with the advent of handset integration with the head-unit, this function is not included in DUST or MHDC. This has substantial benefit for time to market and die size. When OEMs require a card reader, a stand-alone card reader can be easily added to the system via a standard USB hub port which is included in all MHDC and DUST devices.

Outlined below are the part types that will be created from the Sandia project.

Part Number	Architecture Type	Upstream Ports	CarPlay Ports	Standard Ports	Total Ports	Bridging IO	Hub Controller	Package Type
USB4914	MHDC	1	2	1	4	GPIO, I2C, I2S, UART, SPI	Yes	48 QFN
USB4916	MHDC	1	4	1	6	GPIO, I2C, I2S, UART, SPI	Yes	64 QFN
USB4925	DUST	2	2	1	5	GPIO, I2C, I2S, UART, SPI	Yes	48 QFN
USB4927	DUST	2	4	1	7	GPIO, I2C, I2S, UART, SPI	Yes	64 QFN
USB4715	FlexConnect	1	4	0	5	GPIO, I2C, I2S, UART, SPI	Yes	48 QFN

Package variations have been chosen to minimize production cost while providing the necessary IO needed for bridging functionality. Note configurations for bridging options will be defined via bootstrapping of IO's. All five product types will be sourced from a single die.

4.2 Differentiating Features

Outlined below are key differentiating features for Sandia:

- ***Proven hub design –*** Based on the inherent application of a hub, namely, connecting OEM peripherals to a host, Microchips proven hub interoperability and certifications over the last 15 years ensures robust connectivity and reduces usage risk for the automotive OEM.

- ***Multi-Host IP –*** The concept of supporting USB transactions between two hosts via bridged peripheral endpoints is unique, and as such poses risk. Microchip's thorough understanding of USB protocols, USB software eco-system, and in-house IP greatly reduces this risk. Early, proof-of-concept, FPGA implementations will be utilized with target automotive OEMs and head-unit providers to illustrate this capability as well as performing interoperability validation.

  - ***NCM Software Driver –*** The architectural approach taken which will utilize native NCM (network communication mode) driver is preferred by automotive OEMs. This method in contrast to the custom USB host driver being employed by Delphi, has many advantages, including: 1) Native to operating systems and already in use by the head-unit, 2) Not a custom host driver which must function for the MHDC but also correctly manage legacy USB peripherals, and 3) The custom host driver must be maintained per OS/ HW platform, and subsequent revisions over time, whereas the NCM is native and does not need updating. Although we would offer OEMs that we would validate their native NCM with regard to MHDC operation.

  - ***Multi-CarPlay Support –*** Although not call out in the CarPlay specifications, Microchips MHDC architecture will be capable of supporting simultaneous CarPlay sessions if required.

- ***IO Bridging –*** The incorporation of a micro-controller with a hub has system benefits in the break-out-box. Specifically, these interfaces can be used for port power control, audio I2S bridging, system notifications (ie. battery charging and enabling LED), and in the future for power delivery communication and C connector alternate modes.

- ***Battery Charging Support –*** The detection methods developed and used in USB2 and USB3 to distinguish and enable the correct charging profile for USB Battery Charging specification 1.2, Apple profile, and China profile are key differentiators. Having production proven, USB certified silicon in this area separates Microchip from new entrants in the USB2.0 hub market.

- ***HSIC Upstream –*** HSIC interfaces on the upstream facing ports, enables the MHDC products to be integrated into the head unit at the PCB level, which reduces overall power, simplifies system design, while lowering BOM costs.

- ***I2S Bridging –*** By providing I2S bridging, Microchip allows the analog audio auxiliary input to be digitized, and transmitted over USB. This removes the need for the cable as well as connectors on the head-unit side, thus reducing overall BOM costs.

- ***USB Power Delivery Hooks –*** Sandia products are being architected such that the necessary I2C interfaces and memory sizes are included, so that power delivery and Type C connections in the break-out-box can be supported in the future. A key element is that the power delivery stack will fit into the MIPS memory footprint.

- ***Standard Hub Port –*** A standard USB hub is being included such that other USB peripherals can be easily integrated into the break-out-box (ie. card-reader) and so that hubs can be easily cascaded in the vehicle, without using a CarPlay capable port.

- ***Broad range of Automotive USB products -*** The Multi-Host, Dual Upstream, and All-Port-FlexConnect devices join Microchips extensive USB portfolio of hubs, switches, card-readers, and transceivers to make it the broadest automotive portfolio in the industry. These differentiated products taken in consideration with Microchip's total automotive product line, make Microchip a supplier that automotive OEMs and tier ones suppliers want to interact with, when they develop systems with USB connectivity.

4.3 Sandia Product Schedule

The schedule below is the agreed, plan of record, at the time of PBP execution.

CY2015 / 2016 / 2017										
2Q15	3Q15	4Q15	1Q16	2Q16	3Q16	4Q16	1Q17	2Q17	3Q17	4Q17
1	*2*	*3*	*4*	*5*	*6*	*7*	*8*	*9*	*10*	*11*
X	*X*			*x*	*X*	*x*	*X*	*X*	*X*	
FW, HW Start	***FPGA Concept Demo***			***A0 StreamOut***	***AO Samples***	***A1 StreamOut***	***A1 Samples***	***RTP***	***PPAP***	

- Program Start Date May, 2015
- Stream Out – Full Chip (MPW) July, 2016

CONFIDENTIAL

- First customer Samples October, 2016
- Steam Out – A1 December, 2016
- RTP June, 2017
- PPAP July, 2017

Product Development Strategy – An MPW will be used to reduce cost and to prove out Multi-Host concept, MIPS architecture, and new I2S bridging. A1 stream-out is targeted for full mask set to provide production support. Release to production is scheduled for mid-2017.

An FPGA platform will be developed to demonstrate the Multi-Host concept. This FPGA will be used in cooperation with head-unit suppliers to show interoperability and to validate the Multi-Host architecture, NCM drivers, and device firmware. At this time, Panasonic and Harman have been identified and verified as the lead head-unit companies for undertaking this activity.

In addition, it should be noted that Fiat Chrysler Automotive (FCA) is the lead customer for Sandia products. FCA has played a key role in providing feedback on chip features, as well as providing key contacts and support for Microchip's activities with head unit manufacturers.

4.3.1 Sandia Product Schedule – Model Year Consideration

As the Sandia products are targeted to the automotive market, the model year vehicle rollout schedule can be important. It should be noted that the automotive industry has now gone to a staggered introduction schedule so the criticality of model year releases is somewhat diminished, but still represents the beginning of many production programs. Mid-year updates are now more common in the industry, especially in the infotainment area, but overall planning is still dictated largely by new model year releases. Taken together, introducing Sandia to coincide with model year releases would be an overall benefit, as more programs could be addressed sooner. This would also be very beneficial in program planning with Fiat Chrysler Automotive, the lead customer for the project.

Therefore, assuming new vehicle releases occur at the end of October, and working backward in time, the key automotive milestones would be:

Design Validation (DV) - Complete DV nine(9) months prior to Vehicle SOP (start of production); by January 30, 2017. This test can be run with engineering samples/non-PPAP material, and has a typical cycle time of 12 weeks. The sample quantity needed is 40 pieces. The impact is that first AO samples would need to be shipped and built into an appropriate BOB in early September, 2016 for DV start by the end of September.

Process Validation (PV) - Upon success of DV, Process Validation should complete two (2) months prior to Vehicle SOP; by August 31, 2017. This test must be run with production material, and has a typical cycle time of 12 weeks. The typical quantity of material needed is 250-300 units. The result is that A1 production material would need to be shipped to a BOB manufacturer in mid-May for PV testing to be populated by the end of May, and testing complete by the end of August. Note, chip level PPAP testing is assumed to be executed in parallel with the automotive PV testing. The key elements here are that the chips are run from the production flow, and that all PPAP chip level tests pass.

After analysis with regard to the plan of record, MY18 programs could be supported, if: 1) A pull-in of 4 weeks for AO samples is achieved, so that a shipment can be made in early September, and 2) A pull-in of 8 weeks for RTP (Release to Production) of A1 material, so that a shipment can be made in mid-May.

Note that the above scenario is currently being validated with Fiat Chrysler Automotive.

4.4 Sandia Block Diagram

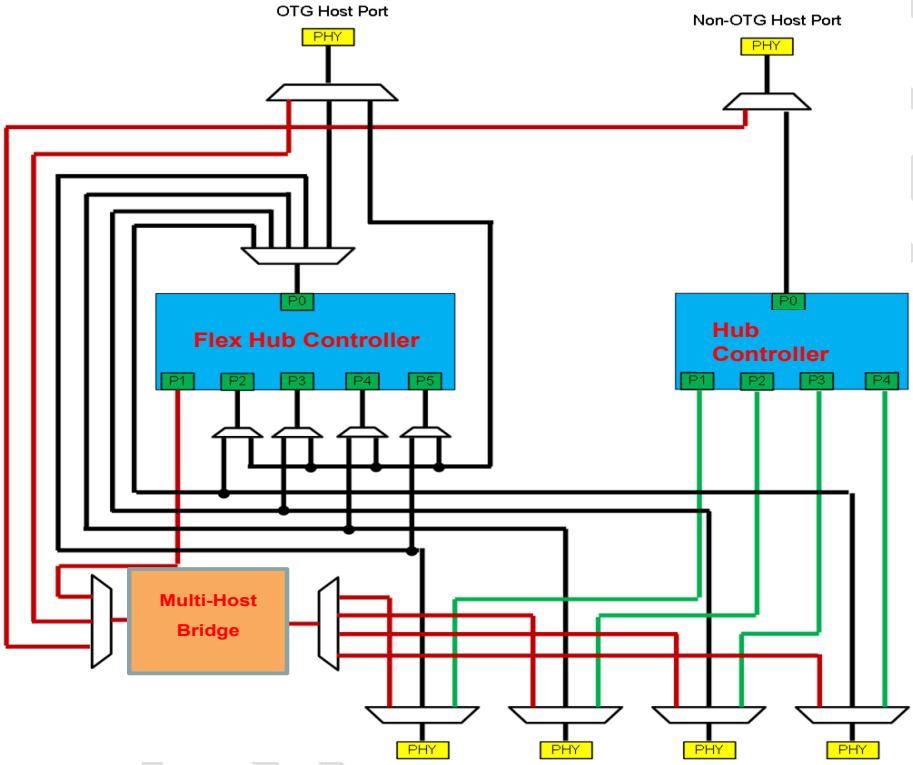

USB to IO bridging is not shown in the diagram, as it is known good IP that has been implemented in both Athens and Tyler product families.

The high level block diagram shows the main elements of the Multi-Host Device Controller and DUST hubs. Key to this development is the re-use of IP from previous programs, specifically:1) Flex Hub Controller is circuitry utilized from the Tyler/ USB3.0 hubs, 2) Physical layer USB blocks will be utilized from Tyler, 3) Port multiplexing will build upon Tyler scheme but will add addition inputs / outputs to enable FlexConnect on all ports, to provide second path for the DUST devices, and to provide the correct routing of CarPlay port to the Multi-Host Controller, while at the same time directing the remaining ports to the Flex Hub Controller so that persistent USB on these remaining ports can be maintained. Note the standard hub controller on the right side of the diagram is a simplified hub with minimal ports and without FlexConnect, which is optimized for the smallest area.

For DUST hub products, the two hubs (ie. blue boxes) provide the primary functionality. When a CarPlay enabled phone is detected on a downstream, it is directed via its multiplexer to the

simplified, standard hub and then to the head unit. This provides a dedicated path and port to the head-unit where CarPlay functionality can be established. The remaining ports stay connected to the Flex Hub Controller where they continue normal USB operation. Note, for DUST products, the Multi-Host Controller (ie. orange block) is not utilized.

For Multi-Host Device Controller hubs, the simplified standard hub is not used. When a CarPlay enabled phone is detected on a port, it is multiplexed to the Multi-Host Controller where the end-point mirroring and USB transaction swaps take place. The remaining ports stay connected to the Flex Hub Controller, and thereby maintain USB functionality (persistent USB).

From an overall perspective, the primary, new elements of the design are the Multi-Host Controller function, and the integration of a MIPs core into the architecture. The Dual Upstream products are achieved by incorporating a simplified hub as the second path to the head unit.

The following features were not included in Sandia; card reader functionality and audio codec.

> The card reader's attachment rate in the break-out-box is declining, and as a result is not included in Sandia as the impact of non-utilized functionality on the die size would have been counter-productive to the gross margin and return on investment.
>
> Currently the automotive OEMs are looking to remove the cable for analogue audio from the break-out-box to head unit. The primary replacement methodology is to digitize and transmit via USB. Looking at the system partition required and Sandia's architecture, it was decided to add I2S bridging to Sandia, but not include the codec. This approach does not impact die size, while meeting the customer needs, as well as meeting the configuration being offered by competitors.

4.5 Manufacturing, Firmware, and Tool Support

All Sandia projects chips will be manufactured with the following process at TSMC:

12" wafers – 65nm
Test Yield: 96% - Target
Assembly Yield: 99.8% - Target
TSMC wafer - 1P6M - Logic

SRAM Implant, LVT NMOS, LVT PMOS, RVT NMOS, RVT PMOS, HVT NMOS, HVT PMOS, Deep NWELL

The silicon process was chosen based upon proven IP, appropriate development time, resultant COGS, and the ability to easily migrate to a USB3 solution. Other processes considered were TSMC 130nM LP and TSMC 55nM eFlash. The 130nM process had some benefit regarding program schedule, but was deficient for a USB3 revision as well as internal muxing needed for the architecture. The 55 nM process allowed for greater user flexibility due to flash memory, but delayed the project 9-12 months, due to IP re-use and tool flows.

CONFIDENTIAL

5 Target Markets and Strategy

5.1 Product Position Statement

Sandia is a unique, single chip, USB hub architecture that can support CarPlay and Android Auto. Unlike standard hubs, these devices can connect concurrently to two hosts/ports (MHDC devices connect to the Head Unit and an iPhone, while DUST parts connect to 2 USB ports in the Head Unit) and successfully transact USB operations concurrently while maintaining USB downstream ports. This functionality fulfills the USB configurations needs of the Head Unit and smart phones, and decreases overall BOM costs and board area for applications in the automotive head-unit and media break-out-boxes. The challenge is executing this architecture in a single design, and proving the design concept to end customers so that they feel confident to implement into their final products.

5.2 Target Market, TAM and SAM Analysis

Mobile handset connectivity / integration with vehicles is just beginning as indicated by IHS Research (2014).

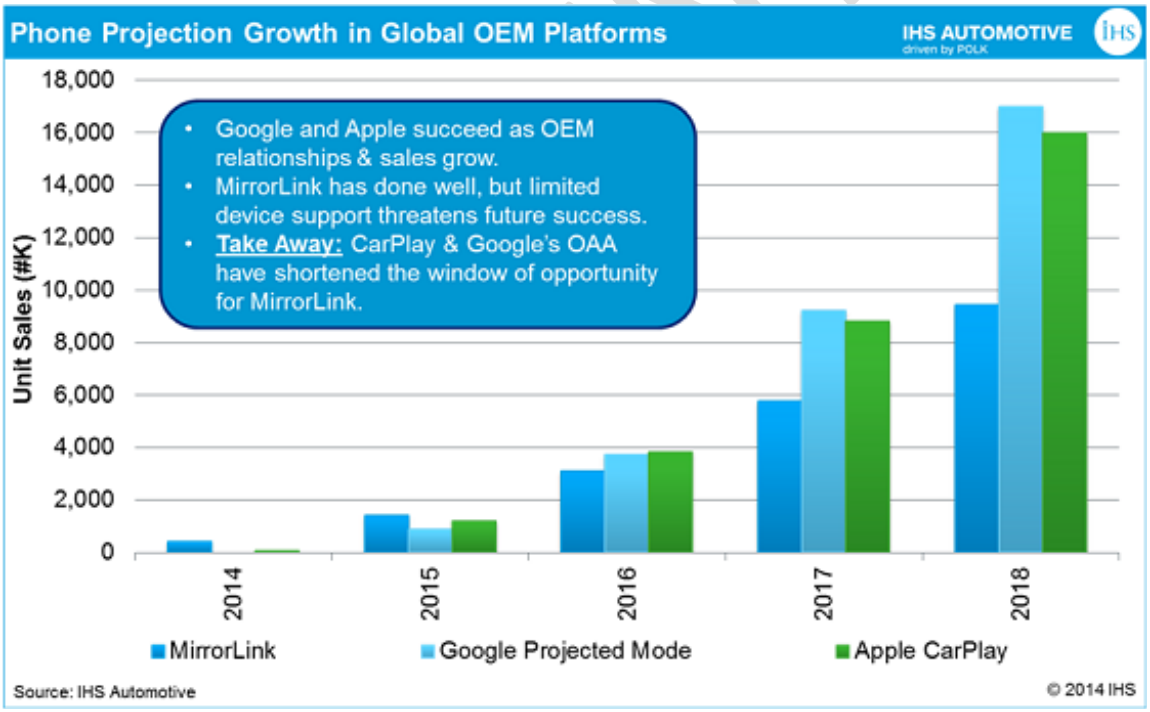

Although initial deployments were integrated into the head-unit, front dash console, improved aesthetics, ease-of-use, and safety concerns motivated virtually all implementations to be integrated into the break-out-box between front seats. Further comments from IHS's Mark Boyadjis, Senior Analyst Infotainment, indicate a swift market adoption for these new specifications.

Cars with Google Android Auto software are expected to top 100 million units by 2020, up from just 86,000 units in 2014. Cars with Apple CarPlay, with 105,000 units in 2014, will exceed 94 million units in 2020, a compound annual growth rate of 210 percent. These volumes will contribute significantly to the nearly 370 million Smartphone apps integration units expected in the automotive industry by 2020, from just 6.9 million units in 2014.

Based upon customer meetings held individually with the top 20 automotive OEMs by Microchip field sales, UNG personnel, and Automotive PG, it is confirmed that this feature is being quickly deployed into vehicles. Paraphrasing Fiat Chrysler Automotive senior staff, "this feature is being integrated across all vehicles platforms and will include multiple instances in the case of Sport Utility Vehicles (SUVs) and mini-Vans."

Given these inputs, UNG feels confident in the market opportunity but has tapered the SAM by roughly 50% for each model year, which results in CarPlay and Android Auto socket shipment of 70MU in MY22. Note CarPlay and Android Auto volume is not additive, but assumed to be unified, meaning that when CarPlay is present, Android Auto will also be present. The Android Auto specification utilizes standard USB topology and does not require any unique design considerations.

The Sandia production ramp, worldwide automobile forecast, and estimated SAM (Served Aggregate Market) are outlined below, along with the resulting Sandia market penetrations. The worldwide car forecast utilizes figures are taken from **KPMG International (Germany).**

Part Number	Market Segment	FY18	FY19	FY20	FY21	FY22
USB4914	CarPlay - Auto	0	1,000	2,400	4,000	2,000
USB4916	CarPlay - Auto	54	2,250	5,400	9,000	4,500
USB4925	CarPlay - Auto	0	500	1,200	2,000	1,000
USB4927	CarPlay - Auto	36	500	1,200	2,000	1,000
USB4715	CarPlay - Auto	0	750	1,800	3,000	1,500
Sandia (KU)	CarPlay - Auto	90	5,000	12,000	20,000	10,000
TAM (KU)	All Cars	107,000	111000	115000	115000	115000
TAM %	MCHP %	0.1%	4.5%	10.4%	17.4%	8.7%
SAM (KU)	CarPlay - Auto	12000	20000	45000	60000	70000
SAM %	MCHP %	0.8%	25.0%	26.7%	33.3%	14.3%

5.3 Product Strategy

The product strategy is built around 3 elements:

1) Close contact with the major automotive OEMs to understand their system requirements and technical needs relating to connectivity between mobile handsets and vehicle infotainment systems. In practice, Fiat Chrysler Automotive is the lead customer for the program. In this capacity they have provided feedback on technical specifications as well as facilitating system validation with head unit manufacturers.

2) Providing a cost optimized, single-chip solution built around proven IP and USB experience with an established history of delivering outstanding automotive development and production support.

3) Presenting Sandia not as a single point solution but as one program in a roadmap of products for USB (USB2.0, USB3.0, and USB3.1), type C connectivity, and power delivery that can be relied upon for future programs and which leverages Microchip's worldwide automotive support infra-structure.

5.4 Competition

The unique nature of Apple's CarPlay implementation, where the iPhone transitions from a USB slave device to a USB host chip is a factor that has greatly reduced the number of market players. As discussed in this document, this has driven two types of architectures; 1) Multi-Host with endpoint mirroring or bridging, and 2) Dual Upstream paths, where two USB busses are established with CarPlay utilizing one of the USB busses, and the remaining ports of the break-out-box utilizing the other. The competition analysis will be discussed in these terms.

DELPHI
Innovation for the Real World

Delphi Automotive through the acquisition of Unwired Technology has a Multi-Host, ASIC solution that they are currently providing to the market, and which has been designed into GM, Ford, and Chrysler. This chip represents a sole-source, point solution for a silicon USB chip. It is unclear how Delphi will be able to react to the ongoing evolution of USB needs in the break-out-box, including USB3.0, USB3.1, power delivery, and USB Type™ C needs.

Texas Instruments is a threat to enter the market, but at this time, they do not possess a USB2 hub product. They do offer a USB3 hubs (2 ports and 4 ports, TUSB8020 and TUSB8041), which could be a threat if the automotive market requirement changes. Current inputs from automotive OEMs are that the move to USB3 will be dictated by the implementation of USB3 in mobile handsets, which to date has been virtually non-existent due to power concerns, and a need for the 5Gbps bandwidth. It should be noted that the CarPlay specification calls out the use of USB2. In order to be successful in the short term, TI would need to develop a USB2 Multi-Host capability or some method of role swapping for a USB Host and USB Slave. We do speculate that a USB2 hub could be stripped out from the USB3 and taken to market. In this case, the single chip architectures of Sandia for MHDC and DUST will be instrumental in winning volume sockets.

Cypress Semiconductor offers a portfolio of over twenty-five (25) USB2 and USB3 hubs, but none of these products are offered in automotive grade. As a result, due to the development time and cost, and the time to revenue in the automotive market, we do not currently see Cypress as an immediate threat.

Currently Renesas offers an automotive USB2 hub (uPD720115, 4 port hub controller), and although Renesas offers USB3 hubs, none of the products at 5 Gbps is available in automotive grade. The USB2 hub is a standard hub without the capability to role swap between USB host and USB slave. Due to the customized nature of the MHDC and DUST, the development and support needs have not historically lent themselves to support by a Japanese supplier. As a result Renesas is not seen as potential threat.

NXP Semiconductors, as a spin-off from Philips, has an extensive USB IP portfolio. During its restructuring, its connectivity group including the USB Product Line was divested. The result was that the group became part of ST-Ericsson, which then obsoleted the product line. As a result, the capability of NXP to output a USB hub is very low. The main threat from NXP would be the application of an Arm Cortex product with USB2 On-the-Go. This would provide the USB Host and Device swap capability. The vulnerabilities of this solution include: limited port support requiring more instances to support a 4 port requirement, and driver capability to interface to break-out-boxes that are likely to be over 3-5 meters away.

5.5 Pricing

Two factors have contributed to the Sandia pricing strategy; first, the current pricing of the break-out-box with equivalent functionality, and secondarily, the competitive pricing of the Delphi solution.

Current BOM of systems deploying discrete chips, range from $5-7 USD, based upon configuration and volume. Delphi ASIC pricing point feedback indicates a price between $2-3 USD. As a result of the market pricing structure, as well as considering target gross margin needs, the price range has been initially set between 2.50 and 3.20 for program volumes of

CONFIDENTIAL

400-500KU per year, depending upon the product configuration. This results in gross margins above 80%.

A projected price point of $3.10 has been mentioned to Fiat Chrysler staff, and did not result in negative feedback. In addition budgetary price requests have recently been received from Panasonic Head Unit and General Motors. In these cases, a $3.5 price was given and did not receive push-back.

As a result, the pricing perception that has been set seems favorable, and provides ample room to move as the market develops, if necessary.

6 Keys to Success

1. Deliver proof of concept demonstration for Multi-Host Device Controller Hub, and continue with a string of demonstrations which add functionality and bring the production system elements to life.
    a. FPGA platform has been isolated for development, and firmware development has begun.
    b. Proof out bridging, legacy USB support, and software NCM model.

2. Develop head unit relationships for system interoperability testing between the head unit and break-out-box
    a. Chrysler is assisting in facilitating these relations with Panasonic, Continental, and Delphi.
    b. Microchip is leveraging Chrysler's presence to obtain hardware/software support that will be needed.
    c. Once interoperation achieves a satisfactory level, work to integrate full system with automotive OEMs to proof system operation.

3. Execution of the development schedule so that key milestones are achieved.
    a. Customer interest has accelerated since UNG revealed the USB automotive hub roadmap. The inclusion of MHDC from a current supplier of hubs who is dedicated to the market is being very well received by automotive OEMs.
    b. Architecture, Firmware, and Design Engineering groups are all very active on vetting the chip architecture and device objective specification (DOS).
    c. Re-use of IP from inside of UNG and from other Microchip groups for MIPs and I2S implementations should lower the overall program risk.
    d. Develop Sandia reference designs for break-out-boxes using MHDC and DUST to expedite market adoption.

CONFIDENTIAL

7 Risks

Delphi Multi-Host Concept Fails
Because this concept is unique and Microchip will be the second to market, a failure by Delphi could negatively impact automotive OEMs from implementing the approach in future programs. Based upon market feedback, Delphi solution is working and has passed Apple CarPlay Auto Certification. Further, Microchip has a full understanding of this type of endpoint bridging mechanism. The market feedback that we are receiving is that the concerns for the Delphi solution stem more from hub implementation, battery charging support, and signal integrity of providing an automotive grade USB hub. All these areas are not of concern for Microchip as they are already implemented in production. This risk seems low based upon market feedback that the Delphi solution is proceeding into production at the time of this writing.

Apple Changes the CarPlay Specifications
Although this issue is out of Microchip's direct control, efforts are being taken to mitigate this risk. Most critical is the architecture design is considering the possibility of an USB3 version in the future. Apple has been approached on future revisions, but has not provided any feedback. Based upon Apple's concerns regarding USB2 signal integrity through a hub, USB3 implementations are sure to garner high scrutiny due to signal integrity over longer distances (4-5M). Lastly, there are virtually no USB3 implementations in mobile handsets. Samsung had included this capability but now has dropped its use, due to some mix of the following issues; interference in the 900 MHz wireless band, power consumption, and the need for a new cable (see article via link http://www.quora.com/Why-did-Samsung-drop-USB-3-0-in-its-new-phones-Note-4). Note, no automotive OEM has indicated a need for a USB3 CarPlay implementation at the time of this writing.

Another risk could be that Apple drops the need to become the USB host, and adopts the USB slave model similar to Android Auto. UNG feels the likelihood of such a change is very remote, based upon the current status of the CarPlay roll-out, and most critically that a USB device has no direct control over the bandwidth it will obtain. If Apple was to change to a USB slave model it would be difficult to assure the user's experience which is one of their vital concerns.

Wireless CarPlay Gains Favor
CarPlay specifications were updated to include wireless capability, and announced to the market on June 8, 2015. UNG anticipates that both of these physical layers will be utilized over time. USB has the advantages that it is being implemented in vehicles now, and that USB is also used as the primary method for battery charging of consumer peripherals. As a result, USB should become the primary usage paradigm for consumers who use CarPlay in the 2015-2017 timeframe. Adding USB3 as a consideration, it could be that Apple stays with USB2 Hi-Speed as the wired option for CarPlay and expands wireless capabilities for future. In any case, the wired option of CarPlay is specifically geared to USB2.0 Hi-Speed, and it is very unlikely to be removed once implemented.

Competitive Entrants
At this time, the main competitor in this area is Delphi. Delphi's version of the MHDC looks to have a one year lead for time to market. Due to the nature of automotive sourcing and having alternate supply, Microchip has a clear path to market. Inputs being received are that the Delphi ASIC is having issues in outputting USB features, such as battery charging and hub interoperability, such that their time to market advantage may decrease. It should be noted that as we have discussed the MHDC products with major automotive OEMs, that they have been quick to output RFQ's for our inputs and pricing.

Another company could enter the market, but we would not be fearful of that event based upon our product portfolio, the capability to deliver on these unique architectures, and the flexibility to revise the pricing strategy given the high level of gross margins, currently projected.

8 FOM Discussion

The FOM Summary sheets follows. Assumptions are listed below the FOM summary. The cost structure and pricing represented here indicate that margins will average 80% throughout the first 4.5 years of the product life cycle (FY18-FY22). Pricing is a blended number, driven by the product mix where Multi-Host products are assumed to drive 65% of the volume compared to DUST and FlexConnect products.

The sales plan is achievable with a high level of confidence due to 3 factors. First with Fiat Chrysler as the lead customer, who manufactures over 4MU vehicle ramp, a quick production start should be enabled. Secondly, with a strong base of USB84604 customers, Sandia can offer a single chip solution with lower BOM costs, and with improved features such as persistent USB on non-CarPlay ports. Finally the potential is there to replace or minimally provide alternate source capability if automotive OEMs have problems with Delphi.

Overall, the potential for Sandia is very good, based upon strong market requirement. With an NPV over $45M on an investment of $4.5M, the return is strong. In addition, with sales of over $115M on investment of $4.5M, the program easily passes the “10X” rule of thumb when comparing revenue to development cost.

New Product FOM Summary
Sandia USB49XX/USB47XX
65nm USB2 Hub Platform code named "Sandia"
Process: TSMC, 65nm

Financial Metrics	6 mo	18 mo	30 mo	42 mo	54 mo	Totals
Units (K)	90	5,000	12,000	20,000	10,000	47,090
ASP ($)	$2.90	$2.60	$2.50	$2.44	$2.38	$2.46
COGS ($)	$0.44	$0.43	$0.42	$0.41	$0.40	$0.42
Revenue (K$)	$261	$13,000	$30,000	$48,800	$23,800	$115,861
Cummulative Revenue	$261	$13,261	$43,261	$92,061	$115,861	
GM (%)	85%	83%	83%	83%	83%	83%
GM (K$)	$221	$10,850	$24,943	$40,541	$19,753	$96,308
Cummulative GM (K$)	$221	$11,071	$36,015	$76,555	$96,308	

Development Costs ($K)			
Architecture/Design/Layout	$1,756	Break Even Time (Months)**	49
Product/Test Engineering	$1,300	NPV @ 15%	45,762
Applications/Systems	$1,288	NPV / Dev Cost	10.18
Marketing/Sales	$153		
Total	$4,496	Development Time	30

Assumptions:

- Blended ASP based upon MHDC and DUST product mix.
- COGS utilizes the 64 pin QFN cost.
- Development costs are blended between US and India based engineering
- Note, Microchip Financial Years (FY) and automotive model years (MY) are roughly equivalent time periods.

8.1 FOM Sensitivity Analysis

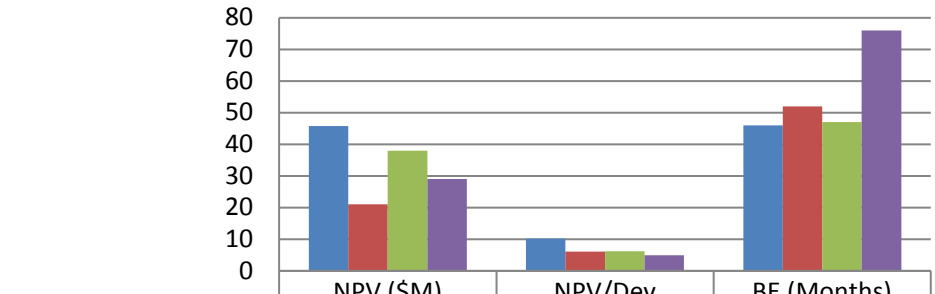

	NPV ($M)	NPV/Dev	BE (Months)
Baseline, 100% Sales	45.76	10.18	46
Baseline, 50% Sales	21	6.07	52
2x Cost, 100% Sales	38	6.2	47
2x Cost, 1 yr Rev slip	29	4.9	76

A sensitivity analysis was run to bracket the NPV and break-even metrics, when sales are decreasing, development cost rise, and revenue plans slips. Worse case conditions were chosen to understand the viability of the program.

Blue represents the baseline business case as outlined in this report.
Red represents the baseline development case with a 50% reduction in sales.
Green represents the baseline sales plan with development cost rising by 100%.
Purple represents a doubling of development cost with a one year revenue slip.

Overall, it can be seen that the NPV remains positive even under extreme conditions, which would indicate overall good potential and return on development investment. In all cases, the breakeven time is longer as driven by automotive development cycle. In the worst case condition of a cost over-run and revenue slip, the program still maintains a strong NPV of $29M, but the break-even time is extended to beyond 6 years. As a result, development execution is the biggest factor for return of investment.

8.2 FOM Input sheet, PBP and Die Size Spreadsheets

Copy of Sandia_area_estimati

Sandia PBP Rev_PBP_B.xls

CONFIDENTIAL

Sandian
Product Type: New Product

Device: USB58xx/59xx Family
USB3 Hub Family called "Elbrus"
Date: 2/23/2015 Process: 65nm, 1P6M DNW/LVtNP/HVtNP/MiM/RDL

Marketing Input	Year .5	Year 2	Year 3	Year 4	Year 5	Total
Units (K)	90	5,000	12,000	20,000	10,000	47,090
ASP ($)	$2.90	$2.60	$2.50	$2.44	$2.38	$2.46
Revenue ($K)	$261	$13,000	$30,000	$48,800	$23,800	$115,861
	$K	Man-Months		Marketing Support ($K Man-Year)		$150
Special Collaterals	$40.00					
Marketing Labor	$112.50	9.00			Target RSM Min	$2.90
Total Marketing Cost ($K)	$152.50				ASP Erosion/Yr.	3-4%

Architecture	$K	Man-Months		Architecture Cost ($K/Man-Year)		$150
DOS Development	$175.00	14.00		Total		
Main Modules	Block Size					
MHDC	0.043					
Hub Core	1.110					
Analog USB2 Phy IP Block	2.200					
Mips Core	0.176					
BIST/IO bridge/Timers/Glue	0.251					
RAM/ ROM	1.680					
Peripheral Modules		Module	Block Size	Module	Block Size	
Digital logic - top level	0.065		0		0	
	0.000		0		0	

Design Engineering	$K	Man-Months	Months	Design Cost ($K/Man-Year)	$75
Design Start To Tapeout (Months)			18.00	Area (50%)	7.82
Design Engineering (Man-Months)	$1,350.00	216.00		Area (90%)	8.24
Design Analog (Man-Months)	$75.00	12.00			
Layout (Man-Months)	$156.25	25.00		Process	65nm 1P6M
Sub-Contractor Labor ($K)	$0.00			Package	48QFN
Total Design Cost ($K)	$1,581.25				

Product/Test Engineering	$K	Man-Months	Months	PE/TE Cost ($K/Man-Year)		$130
Tapeout To Silicon Release (Months)			12.00			
Product/Test Engineering (Man-Months)	$130.00	12.00		1st Year Die Cost FQ2'17	$0.29	$0.00
Wafers ($K)	$200.00					
Test Hardware ($K)	$160.00			64 QFN	$0.12	$0.00
Packages ($K)	$100.00			Test	$0.03	$0.00
Masks ($K)	$710.00	30% of total cost				
Total PE/TE Labor Cost ($K)	$130.00			1st Year COGS	$0.44	$0.00
Total Material Cost ($K)	$1,170.00					
Sub-Contractor Labor	$0.00					
Other (K$)	$0.00					
Total PE/TE Cost ($K)	$1,300.00					
				Wafer Cost FQ2'17		$2,255
				Wafer Size		12
				Cost Model Date		1Q2016
				Estimated Annual Cost Reduction		3%
				1st Yr. Unit Cost Savings		$0.01

Systems	$K	Man-Months	Systems Cost ($K/Man-Year)	$100
Protouch and SDK S/W Suite	$50.00	6.00		
Firmware for the Hub	$308.33	37.00		
Power Delivery Support Suite	$0.00	0.00		
Eval Boards (6)	$212.50	25.50		
Firmware Validation	$358.33	43.00		
Protouch support Validation	$16.67	2.00		
PRE Si Validation	$16.67	2.00		
POST Si Validation	$125.00	15.00		
Sub-Contractor Labor	$0.00			
System Labor ($K)	$1,087.50			
System Material ($K)	$0.00			
Total Systems Cost ($K)	$1,087.50			

Applications/Support	$K	Man-Months	Apps Cost ($K/Man-Year)	$100
Datasheet Development, FRM Sections	$16.67	2.00		
Datasheet Printing	$0.00			
App Notes, SW, Dev Platform	$150.00	18.00		
Bench Characterization & Validation	$33.33	4.00		
WHCK &USB-IF	$37.50	4.50		
Sub-Contractor Labor ($K)	$0.00			
Total Labor ($K)	$200.00			
Material Expenses ($K)	$0.00			
Total Applications	$200.00			
Total Development Cost ($K)	$4,496			
Total Development Time (Months)	30.00			

CONFIDENTIAL

RESTRICTED - ATTORNEY EYES ONLY

9 Revision History Details:

DATE	DOCUMENT VERSION	SECTION	CHANGE SUMMARY
7/16/2015	0.5		Initial Release
8/18/2015	.95		Updated to include 50% and 90% die areas. COGS revalidated.

CONFIDENTIAL