Docusign Envelope ID: DE655A16-E3F5-468A-A919-8C76B01B0BE9

IN THE UNITED STATES PATENT AND TRADEMARK OFFICE

BEFORE THE PATENT TRIAL AND APPEAL BOARD

MICROCHIP TECHNOLOGY INC.,
Petitioner,

v.

APTIV TECHNOLOGIES AG AND APTIV TECHNOLOGIES LIMITED,
Patent Owners.

Case Nos. IPR2024–00228, IPR2024–00229,
IPR2024–00230, IPR2024-00495, and PGR2024–00011

REPLY DECLARATION OF ERIC WELCH

Docusign Envelope ID: DE655A16-E3F5-468A-A919-8C76B01B0BE9

TABLE OF CONTENTS

I. INTRODUCTION 3

II. TECHNOLOGY BACKGROUND 4

A. Reset/Initialization/Default State Generally 4

B. Reset/Initialization/Default State in USB Systems 5

C. USB "Attachment" and "Removal" 7

III. LEVEL OF ORDINARY SKILL IN THE ART (POSITA) 11

IV. THE PROPOSED OBVIOUSNESS COMBINATIONS DO NOT RESULT IN A "DEAD-END" STATE 21

A. Patent Owner's "Dead-End" Argument is a Straw-Man 23

B. Patent Owner Misunderstands How the Detection Unit Operates When *Located* in the Bridge 25

C. Even Accepting Patent Owner's Incorrect Understanding of the Proposed Modification, There Would Be No "Dead-End" Problem 28

V. A USB MULTIPLEXER/CROSSBAR HAS MULTIPLE SWITCHES ('072 PATENT AND '962 PATENT) 35

VI. CONCLUSION 37

Microchip Ex. 1102, p. 2
Microchip v. Aptiv
IPR2024-00230

Docusign Envelope ID: DE655A16-E3F5-468A-A919-8C76B01B0BE9

I. INTRODUCTION

1. Microchip Technology Inc. ("Microchip" or "Petitioner") retained me in the above-captioned matters as an independent consultant to offer opinions regarding the patentability of the claims in U.S. Patent Nos. 9,619,420 ("the '420 patent"), 9,645,962 ("the '962 patent"), 11,176,072 ("the '072 patent"), and 11,681,643 ("the '643 patent") (collectively the "Challenged Patents").

2. In my Original Declarations (EX1013), I analyzed and provided examples of how the prior art discussed therein (*e.g.*, Chang and Chang II), combined with a POSITA's knowledge, rendered the Challenged Claims obvious.

3. Since that time, Patent Owner submitted its Patent Owner Preliminary Response, Patent Owner's Response, and accompanying exhibits for each Challenged Patent, which I have reviewed. I have found them to be riddled with errors, misstatements, and misunderstandings of the underlying technology – along with numerous other flaws and misquotations.[1] I have been asked for my opinion

---

[1] I note that Patent Owner made numerous references to my deposition testimony. In many instances Patent Owner referenced my testimony improperly by taking the testimony out of context, omitting key parts of an answer, or attributing an answer to a question that was not the one I was answering. I do not concede any of the misattributions. As on example, Aptiv says I admitted that "Chang's control unit 46 does not satisfy the definition of a hub in the challenged claim." '072 POR, 37; '962 POR, 38; '420 POR, 37. My Original Declarations include several discussions of

Docusign Envelope ID: DE655A16-E3F5-468A-A919-8C76B01B0BE9

regarding the matters addressed herein. In particular, I have been asked from my opinion regarding Patent Owner's assertions that the proposed obviousness combinations in my Original Declarations are inoperable because they result in what Patent Owner calls a "dead-end" state (*viz.*, Chang's modified hub is stuck in a host-to-device connection and cannot switch to a host-to-host connection).

4. Because of the many similarities in Patent Owner's arguments, I provide one Reply Declaration addressing all four Challenged Patents.

II. TECHNOLOGY BACKGROUND

5. My Original Declarations provided a Technology Background tutorial. I supplement that tutorial here with additional information responsive to Patent Owner's argument that the proposed combinations result in a "dead-end" state.

A. Reset/Initialization/Default State Generally

6. The laws of physics and the basic principles of modern electronics dictate that most electronic systems need a "Reset Circuit" to affect an initial, known state after the power is first applied. This is because many electronic components

---

why Chang's control unit 46 is the claimed ***hub***. The deposition testimony Aptiv cites, when read in context, is clear that all I was saying is that the Chang's hub control unit 46 is not a ***hub module*** (*e.g.*, as that term appears in '420 patent claim 1) because the claimed ***hub module*** also requires a bridge, a routing switch, etc., in addition to a "hub."

Docusign Envelope ID: DE655A16-E3F5-468A-A919-8C76B01B0BE9

can be metastable (in an unknown state) when first powered on. The Reset Circuit has the job of bringing all components and subsystems into a known state upon power-on. Simple electrical engineering provides that this initial state be the starting point of whatever operation is contemplated, and that the required "reset" function be provided to return the system to that state (also sometimes called a "default" state or a "reset" state) without having to cycle the power. A POSITA would be well-aware of this basic engineering concept.

7. See, for example, Horowitz & Hill (EX1103, 18-20 (book pages 534-536)) for an example of a state driven vending machine with a Reset signal to set the system to its initial power-on state.

B. Reset/Initialization/Default State in USB Systems

8. The USB 2.0 specification defines "Power On Reset (POR)" as "Restoring a storage device, register, or memory to a predetermined state when power is applied." EX1018, 36.

9. In Figure 9-1 from the USB 2.0 specification, Reset and Default are considered from the Device perspective. Here Reset is the signal sometimes referred to in the USB Specification as "Single Ended Zero" (SE0), which can be driven by the host to tell the device to switch to its "Default" state. *See* EX1018, §7.1.7.5 ("A hub signals reset to a downstream port by driving an extended SE0 at the port. After the reset is removed, the device will be in the Default state (refer to Section 9.1). …

Docusign Envelope ID: DE655A16-E3F5-468A-A919-8C76B01B0BE9

[Seeing] an SE0 on its upstream facing port for more than 2.5 µs [] may treat that signal as a reset.”).

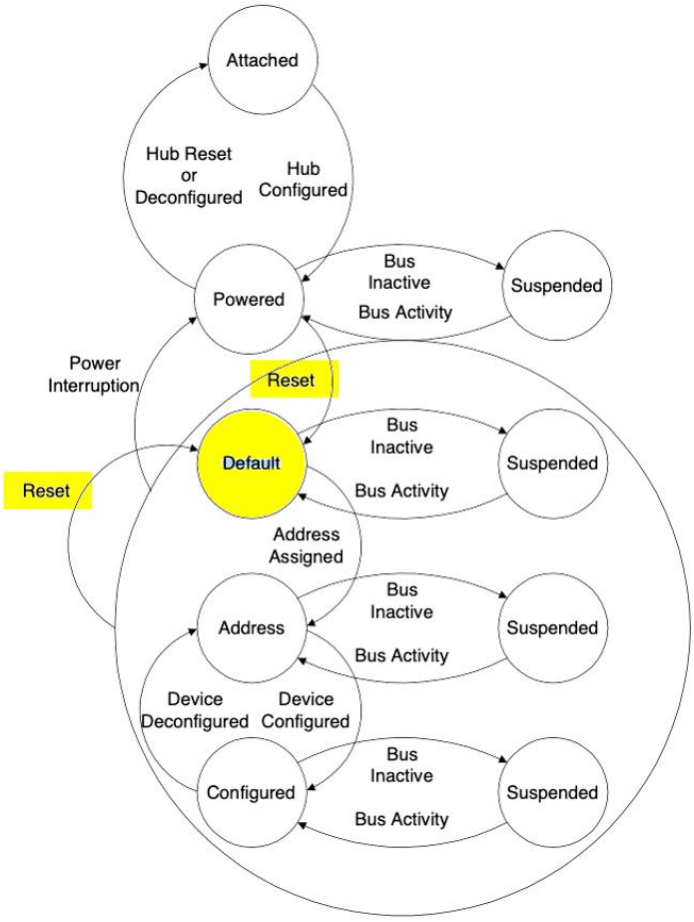

Figure 9-1. Device State Diagram

Id., 268 (Fig. 9-1, annotated). The concept of a reset/initialization/default setting in USB is not limited to just devices, but applies equally to USB hosts and USB hubs. *See id*., Appendix C (providing “Reset Protocol State Diagrams”), §C.1 (“Downstream Facing Port State Diagram”), §C.2 (“Upstream Facing Port State Diagram”), and §C.2.4 (describing the “Reset Handshake” protocol).

Docusign Envelope ID: DE655A16-E3F5-468A-A919-8C76B01B0BE9

10. The USB Specification also explains how a USB device can provide the same message: "When no function is attached to the downstream facing port of a host or hub in low-/full-speed, the pull-down resistors present there will cause both D+ and D- to be pulled below ***the single-ended low threshold*** of the host or hub transceiver when that port is not being driven by the hub. ***This creates an SE0 state on the downstream facing port. A disconnect condition is indicated if the host or hub is not driving the data lines and an SE0 persists on a downstream facing port for more than [a specified time]***." EX1018, §7.1.7.3 (emphasis added). SE0 voltages and timings are specified in Table 7-2 of the USB 2.0 Specification. *Id*., 173. Additional "reset" details are in §§11.5.1.5, 11.6.3.8-9 of the USB 2.0 Specification.

C. USB "Attachment" and "Removal"

11. The USB 2.0 specification discusses the concepts of "Attachment" and "Removal" which describe how USB products connect to (and disconnect from) one another, respectively. EX1018, §§4.6.1 (Attachment) and 4.6.2 (Removal). In other words, "Attachment" is the USB term for opening a data connection and "Removal" is the USB term for closing a data connection.

12. A physical connection between the pins on a USB product and the corresponding receptacle (*viz.*, port) are necessary to establish a USB data connection with another USB product, but simply having a physical connection alone is not sufficient. Likewise, a USB product may close a data connection (*viz.*,

Docusign Envelope ID: DE655A16-E3F5-468A-A919-8C76B01B0BE9

called "Removal" in the USB Specifications) without physically being unplugged. Dr. Houh recognized as much at his deposition. EX1085, 296:1-12. The discussion of Attachment, Removal, and related concepts in the USB 2.0 specification is primarily concerned with the signaling and protocol for establishing a data connection, not the physical mating of the correct wires.[2] For example, the USB 2.0 specification has a section dedicated to "Reset Signaling" (§7.1.7.5) and another for "Connect and Disconnect Signaling" (§7.1.7.3). The concepts of Attachment (as that term is used in USB Specification, which is not limited to physically plugging in a USB product) and Removal (as that term is used by the USB Specification to mean logically disconnected) would be well-known to any POSITA as they are among the most basic and fundamental USB principles (*i.e.* how to connect/disconnect a device), and a POSITA would readily be able to access any information necessary about those concepts by reference to the USB standard.

13. The following diagram (created for illustrative purposes) shows USB Device Attachment and Removal as outlined in the USB 2.0 specification (§§4.6.1 (Attachment), 4.6.2 (Removal), and 7.1.7.5 (Reset Signaling)):

[2] The physical form factor of receptacles, pins, wires, etc. is addressed elsewhere in the USB Specifications.

Docusign Envelope ID: DE655A16-E3F5-468A-A919-8C76B01B0BE9

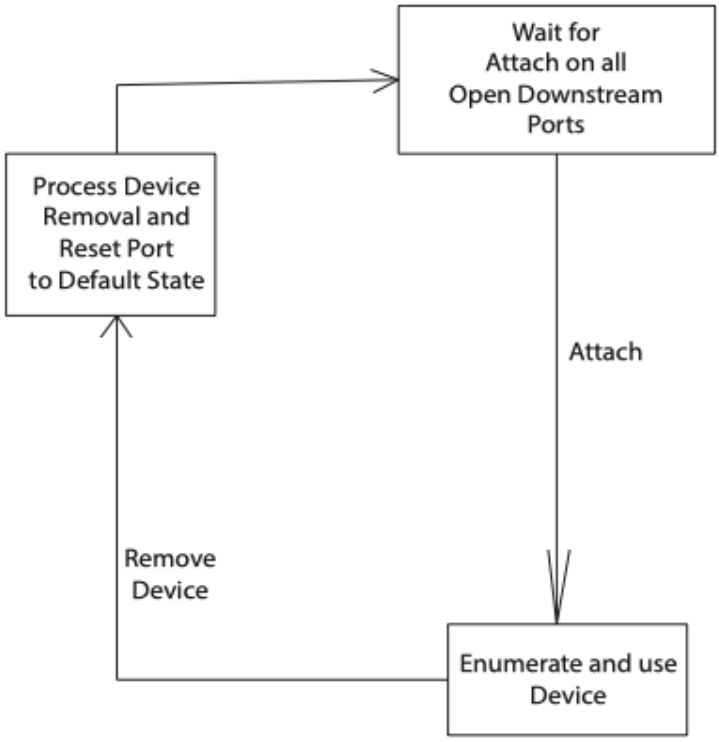

14. This flow illustrates Attachment and Removal, which necessarily entails the perspective of both an upstream and downstream port. Once a USB product is physically present on a downstream port, the USB product is enumerated. After this the product may be used according to its capabilities and associated system software (also called a device driver). When a USB device is "removed" from a downstream port, the "removal" is detected in the system and a message is sent to its associated device driver at the upstream host. *See, e.g.,* EX1018, §§7.1.7.3 ("Connect and Disconnect Signaling") and 7.1.7.5 ("Reset Signaling"). The now disconnected upstream port is reset to its Default State of looking for a new Attach.

15. Note that Removal of a device (*viz*., closing the data connection) is

Docusign Envelope ID: DE655A16-E3F5-468A-A919-8C76B01B0BE9

detected electrically by sensing that the device has tristated its data drivers (*viz*., the circuits that drive the D+ and D- data lines) and electrically disconnected its speed resistor. As noted above, this does not require physically unplugging anything, although that is, of course, also supported. Patent Owner's product documentation for its dual-role hub using the "Boston chip" reflects this USB principle (*i.e.*, no physical disconnection necessary). *See* EX2023, 89 ("It is recommended that any external port should change this connectivity only when there is no device or host connected (***in the USB sense***) to it. Note that ***this does not require the device's cable to be removed***, only that there is no USB network interacting with that port at the time of the switching.") (emphasis added).

16. In slightly more detail, each of the D+ and D- data lines at the upstram host location will be connected to their own respective 15kΩ pull-down resistors. Thus, when ***both*** the D+ and D- data lines enter a tristate (floating) condition because the downstream device has tristated the drivers for those signal lines, the D+ and D- data lines at the upstream host will both be pulled low at the same time due to the 15kΩ pull-down resistors. Per the USB Specification, when this condition persists for a defined time period, it is interpreted by the upstream host as an SE0 command which indicates the data connection has been closed and a reset condition ensues.

17. If a downstream product wishes to reconnect, perhaps because it has reconfigured itself, after waiting a short period (*e.g.*, 100ms), the downstream

Docusign Envelope ID: DE655A16-E3F5-468A-A919-8C76B01B0BE9

product (which may never have been physcially disconnnected from the port), will then reconnect its speed resistor. From an electrical and protocol perspecive, this is indistinguishalbe from physically unplugging and replugging a USB product. As dicussed further below, this is the process used when a dual-role USB product switches modes—*i.e.*, it first closes the existing data connection (Removal) and then proceeds to start a new one (Attachment), just as if it had been physcially unplugged and replugged. As part of this process, the system does not store or "remember" the previous connection, including what type of connection existed. The USB "Attachment" and "Removal" protocols are part of what enables USB to offer "hot plug" or "plug-and-play" capability.

III. LEVEL OF ORDINARY SKILL IN THE ART (POSITA)

18. In my Original Declarations, I proposed qualifications of a POSITA. EX1013, ¶¶45-49. Patent Owner (and Dr. Houh) set forth the following qualifications: "a person of ordinary skill in the art in the field of the Challenged Patents, as of the date of invention (September 26, 2013) ('POSITA'), would have had a bachelor's degree in computer science, electrical engineering, or an equivalent, and two years of professional experience working with computer network protocols such as USB. Lack of work experience can be remedied by additional education, and

Docusign Envelope ID: DE655A16-E3F5-468A-A919-8C76B01B0BE9

vice versa." EX2019, ¶26.[3] This proposal parallels mine in many, but not all, respects. I believe my proposed qualifications more accurately reflect the true level of ordinary skill in the art, but I maintain my obviousness opinions under Patent Owner's proposed level of skill in the art for the reasons discussed below.

19. I qualified as a POSITA under Patent Owner's definition. In fact, I exceeded Patent Owner's proposed qualifications (and my criteria as well), but I performed my analysis and formed my opinions in all instances from the perspective of a POSITA. As noted, my opinions herein (and in my Original Declarations) would be substantially the same under Patent Owner's proposed definition, which Dr. Houh repeatedly testified enable a POSITA to readily access and easily understand the USB standards, and presumed familiarity with related networking concepts. *See, e.g.*, EX1084, 82:22-83:12, 84:1-25 ("I think the POSITA that I've laid out certainly would have the capability to pick up a specification such as a USB specification and review and understand that and then be able to implement and make devices based on the level of education and skill that I've laid out in what my opinion is. I think they could review and read these types of specifications and understand them."), 91:8-17 ("What I'm saying is that my level of POSITA would have been perfectly capable of reviewing these standards and specifications and

[3] This is ¶27 in IPR2024-00495.

Docusign Envelope ID: DE655A16-E3F5-468A-A919-8C76B01B0BE9

understanding them."), 103:21-104:2 (familiarity with master/slave architecture), 104:24-105:4 (familiarity with bridges).

20. Patent Owner agrees with the educational requirement and that further education can trade off (at least to an extent) with work experience and vice versa. And Patent Owner agrees that some amount of work experience is necessary (*i.e.* "two years"), compared to the "several years" I proposed. Regarding the education and experience of the inventors, I note that Linkedin profiles are available for two of them, which support my definition. *See* EX1096 (R. Voto had an MSEE degree and 20 years of engineering experience in 2013); EX1097-1098 (C. Petku had a BSEE degree and 20 years of engineering experience in 2013).

21. My POSITA statement is more detailed and identifies some things a POSITA would know about in view of their education and work experience. EX1013, ¶47. Patent Owner's definition is more general and, as noted above, says a POSITA would have "two years of professional experience working with computer network protocols such as USB." This leaves more open-ended the types of things a POSITA with experience in "computer protocols such as USB" would be familiar with or know. If Patent Owner's more generic recitation is intended to encompass the items in my definition, there isn't much difference between the parties' two statements—one is simply more detailed than the other. In this case, the analysis of

Docusign Envelope ID: DE655A16-E3F5-468A-A919-8C76B01B0BE9

the prior art is essentially the same regardless of which definition is used and the exact words used to describe a POSITA's qualification boils down to semantics.

22. Apart from being a more general characterization of a POSITA, Patent Owner's definition is rather vague in one respect because it refers to professional work experience as experience "with computer network protocols ***such as USB***." If Patent Owner means to say that no USB knowledge or experience whatsoever is necessary, then I disagree. All of the Challenged Patents (and prior art) presume a baseline knowledge and familiarity with the USB Specification, and all of them expressly refer to such standards.

23. At his deposition, Dr. Houh demurred on the topic of whether (or how much) USB experience was required:

> Q. Could an individual qualify as a POSITA under your definition if they had no USB experience?
>
> A. Well, I mean, you're presupposing that lack of any USB experience is total lack of all concepts in USB, which is simply not true. I mean, if you've done communications -- you know, USB is about serial communications; and that's part of a lot of the core curricula for networking courses. So it's not so black and white that you have to know about a very specific protocol to know anything about the protocol. You can know things about a protocol and have experience even though you haven't worked with a specific protocol. So it's not -- you really can't say you know nothing about USB that's not -- USB protocol concepts are – there's a high overlap with other

Docusign Envelope ID: DE655A16-E3F5-468A-A919-8C76B01B0BE9

> communications concepts and other protocols. So if you know something about and work with network protocols, you know a lot about what most protocols are designed to do.

EX1084, 100:17-101:12 (objection omitted). Dr. Houh's testimony is a tacit concession that, one way or another, a POSITA would be familiar with USB. Without the USB Specifications, USB as the world knows it (including USB device, USB host, and USB hub products) would simply not exist. Moreover, the USB Specification is considered on "open" standard (as opposed to a proprietary/confidential specification) and is one of the best-known industry standards in the world. EX1023, 29 ("USB is the most successful PC peripheral interconnect ever defined …. In 2006 alone over 2 billion USB devices were shipped and there are over 6 billion USB products in the installed base today."). Given that literally billions of devices practice the USB Specifications (which have been in existence for decades), it is simply not credible in my view to say that a POSITA designing a USB-based system (such as a USB hub product) could be ignorant of the USB Specifications and the core/underlying concepts therein.

24. For example, the Challenged Patents all state that "[t]he detection and enumeration processes are defined by USB standards and not explained here in detail." *See, e.g.*, EX1009,[4] 6:32-34; *see also id.*, 7:67-8:12, 1:21-22 ("The present

[4] This cites the '072 patent, but identical language exists in all Challenged Patent.

Docusign Envelope ID: DE655A16-E3F5-468A-A919-8C76B01B0BE9

invention generally relates to Universal Serial Bus ('USB') connectivity"). They also expressly recite the USB OTG standard. *Id*., 3:21-27 ("The USB organization has added a standard that addresses the need for devices to act as either USB Host or USB Device"). It was this USB standard that purportedly gave rise to one alleged problem the Challenged Patents sought to solve. And the '962 patent additionally relies on the "USB Power Delivery Specification Rev. 3.0 v1.0" and the "USB Type-C Cable and Connector Specification, Revision 1.2." EX1005, 10:36-57.

25. Chang and Chang II also both reference the USB standards. *See, e.g.,* Chang II, [0002] ("The present invention is related to a bridge device for transmitting data; and more particular to a data transmission bridge device and control chip thereof for transmitting data ***that adopts USB specification***") (emphasis added), [0011] ("the present invention device is designed to ***adhere to USB specification***") (emphasis added), [0012] ("adopts USB specification"), [0021] ("the present invention adheres to USB specification by design, so that 'plug and play' works properly.'"), [0030] ("other combinations and other connector types are too numerous to list, but ***those connector types covered under USB specification is all within the scope of the present invention***.") (emphasis added), [0029]-[0032] (discussing USB specification compliant connectors), [0046]; Chang, [0002] (discussing "USB 2.0 host-to host transmission cable"). These are just examples,

Docusign Envelope ID: DE655A16-E3F5-468A-A919-8C76B01B0BE9

many other references submitted with the Petition and discussed in my Original Declarations likewise reference and build on the USB standards.

26. Considering that the Challenged Patents—and the Challenged Claims which all recite various "USB" components—are all about USB and build on the presumed USB knowledge base, a POSITA would (1) certainly be familiar with the USB industry standards and related USB concepts outlined in my POSITA section; and (2) know that the best source for this knowledge is the USB Specifications themselves. My POSITA discussion set forth in my Original Declarations is more consistent with the Challenged Patents and the prior art as discussed above than Patent Owner's generic/vague statement.

27. In this regard, however, I note that even if knowledge of basic USB standards and protocols were not considered to be part of a POSITA's qualifications or knowledge in advance of working with the subject matter of the Challenged Patents, Dr. Houh testified that a POSITA could easily reference, review, and understand the USB standards:

> Q. Would you agree with me that that ability is something a POSITA would have?
>
> A. Well, I think the POSITA that I've laid out certainly would have the capability to pick up a specification such as a USB specification and review and understand that and then be able to implement and make devices based on the level of education and skill that I've laid out in

Docusign Envelope ID: DE655A16-E3F5-468A-A919-8C76B01B0BE9

> what my opinion is. I think they could review and read these types of specifications and understand them. EX1084, 84:15-25.
>
> Q. Is it your opinion that a POSITA would not have been well-versed in the USB 2.0, 3.0 and OTG standards?
>
> A. I mean, that's not exactly what I'm saying. What I'm saying is that my level of POSITA would have been perfectly capable of reviewing these standards and specifications and understanding them sufficient to understand the patented inventions and to even perhaps make use of them. *Id*., 91:8-17 (objection ommitted).

While I believe a POSITA would have a baseline knowledge and working understanding of the USB standards to begin with, I certainly agree with Dr. Houh that a POSITA could do all of the things he describes in the passages above.

28. Similarly, even if a POSITA lacked specific USB knowledge in advance, Dr. Houh stated a POSITA would know the networking concepts relevant to the USB subject matter of the Challenged Patents:

> Q. Could an individual qualify as a POSITA under your definition if they had no USB experience?
>
> A. Well, I mean, you're presupposing that lack of any USB experience is total lack of all concepts in USB, which is simply not true. I mean, … there's a high overlap with other communications concepts and other protocols. So if you know something about and work with network protocols, you know a lot about what most protocols are designed to do. EX1084, 100:17-101:12 (objection omitted).

Docusign Envelope ID: DE655A16-E3F5-468A-A919-8C76B01B0BE9

> Q. Could someone qualify as a POSITA under your definition in paragraph 26 if they had two years of professional experience working with a network protocol other than USB?
>
> A. I mean, they would have worked with similar concepts that are also present in USB. *Id*., 102:3-8.

He goes on to state that other concepts like master/slave architecture were also well known. *Id*., 103:21-104:2 ("Q. So, for example, would a POSITA under your definition be familiar with the concept of a master/slave network architecture? A. I mean, that level of education, that specific thing is very common -- you know, a very common concept in computers and networking") (objection omitted). The same is true for the use of bridges. *Id*., 104:24-105:4 ("Q. Under your definition of a POSITA, would a POSITA have an understanding of the concept of bridging? A. I mean, bridging is a very basic, common networking concept that can be applied to a variety of different specific protocol areas, yes.") (objection omitted).

29. For the reasons I've outlined above (*e.g.*, Dr. Houh's statements about network concepts a POSITA would know and the ability of a POSITA to readily review/understand any necessary aspects of the USB standards), it is my opinion that the Challenged Claims of all the Challenged Patents are obvious for substantially the same reasons explained in my Original Declarations. In other words, even under Patent Owner's definition (including as elaborated on by Dr. Houh), I believe all Challenged Claims are obvious.

Docusign Envelope ID: DE655A16-E3F5-468A-A919-8C76B01B0BE9

30. I note that both parties agree that a POSITA's education and work experience can trade-off for one another. In particular, in my definition of POSITA I stated that "A relevant advanced degree may substitute for some work experience." I did not mean by this that an advanced degree (such as a Ph.D. in network communication) could substitute for any and all USB experience, and I do not agree that an advanced degree can substitute for a complete lack of USB knowledge/experience. In this regard, I observe that Dr. Houh testified as follows regarding his lack of USB experience:

> ***I do not specifically have four years of experience designing USB systems, including USB hosts and hubs and USB devices***; but I have a relevant advanced degree all the way up to a Ph.D. that Mr. Welch says could substitute -- may substitute for some work experience. And then I have not specifically -- ***I don't have specific professional experience in working with USB***, but I think my Ph.D. in networking -- this is really a networking – that's what I did for my Ph.D. -- may substitute for this work experience. EX1084, 80:9-19 (emphasis added)
>
> [W]ere you well-versed in USB standards, including the USB 2.0 and 3.0 specifications and the OTG supplement, in 2013? …
>
> A. ***So I did not specifically have work experience with those standards***, but I had designed prior to that point a high-speed serial optical link. *Id*., 83:3-9 (objection omitted, emphasis added).
>
> Q. Dr. Houh, in 2013 were you well-versed in the design and deployment of USB hosts, including embedded hosts, USB devices and

Docusign Envelope ID: DE655A16-E3F5-468A-A919-8C76B01B0BE9

> USB hubs?
>
> ***A. So I did not specifically work with USB***; but as of 2013, I had designed networking switches which had many similarities to the functions within hub devices generally. … So while ***I don't have specific experience with the specific USB specifications laid out here***, I had an education level that allowed me then to review these types of specifications and understand them …. *Id*., 83:14-84:7 (objection omitted, emphasis added).

31. As I discuss in the sections below, Dr. Houh's lack of USB knowledge and experience explains why he fundamentally misunderstands key USB concepts relevant to the Challenged Claims and interpretation of the prior art. And it explains why Patent Owner posits a POSITA statement requiring only generic "computer network protocol" experience, which ***could—but need not***—include "USB" knowledge/experience.

IV. THE PROPOSED OBVIOUSNESS COMBINATIONS DO NOT RESULT IN A "DEAD-END" STATE

32. In my Original Declarations, I discussed host/device detection in §VI.A.1 and routing switches (including USB muxes and crossbars) in §VI.B.2. I further discussed application of those concepts in the specific context of the proposed obviousness combinations (for both the Mux and Crossbar Implementations) in §IX, including ¶¶183-197. In doing so, I gave more detail and explanation than the Challenged Patents provide or the claims require on this subject.

Docusign Envelope ID: DE655A16-E3F5-468A-A919-8C76B01B0BE9

As part of this discussion, in ¶¶192-193 I proposed several obvious locations that a signal detection unit could be located. For reference, I reproduce ¶¶192-193 and the accompanying exemplary illustration for a Mux Implementation below, which applies equally to all combinations vis-à-vis the detection unit:

> 192. As I describe above, detection circuitry is necessary to detect the mode of the dual-role product, which then causes selection of the appropriate path. An example deployment of a detection unit (*e.g.*, in view of Chang II) is shown in the Mux Implementation:

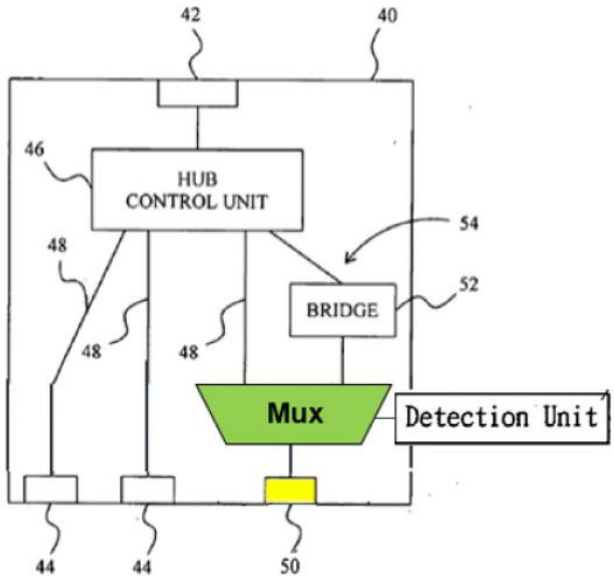

EX1014 (Chang), Fig. 3 (modified and annotated).

> 193. This detection circuitry could be deployed in several obvious ways. In the example above it is associated with the mux. In another obvious example, it could be separate and between the dual-role port 50 and mux. This location is obvious because it is the first place a signal from a downstream USB product arrives. In a third obvious location, it could be located in the bridge to take advantage of

Docusign Envelope ID: DE655A16-E3F5-468A-A919-8C76B01B0BE9

existing logic and circuitry to, for example, process the output of the detection circuit in a manner similar to Chang II's CPU 135 (EX1015 (Chang II), [0038], Fig. 5). It would have been routine and obvious for the bridge and/or the detection unit to control the switching functionality. For example, as I describe above, Chang II's bridge includes a "*detection unit*" (in the control chip) that detects the mode of the downstream product for selection of the appropriate transmission path. *Id.*, [0022]-[0023], [0034]. The above illustrates the detection unit connected to the mux to show that host/device detection ultimately controls the mux's select line. Additionally, the detection unit must connect to the downstream port to detect the mode, as shown in Chang II. *Id.*, Fig. 5.

33. Patent Owner and Dr. Houh fundamentally misunderstand the proposed obviousness combinations.

A. Patent Owner's "Dead-End" Argument is a Straw-Man

34. To begin, the first reason Patent Owner's "dead-end" argument is wrong is because it is a straw-man argument (*i.e.*, misrepresents the proposed combinations) to begin with. As noted above, I proposed several different obvious locations a POSITA would place a detection unit, and only one of them was co-located with the Chang's bridge 52. But that is the only scenario Patent Owner and Dr. Houh address. They never argue that placing the detection unit between the dual-role port 50 and mux (or crossbar)—which I noted was obvious "because it is the first place a signal from a downstream USB product arrives"—would suffer the

Docusign Envelope ID: DE655A16-E3F5-468A-A919-8C76B01B0BE9

alleged "dead-end" condition. Under Patent Owner's own logic, such an argument would fail because the detection unit would have access to the D+ and D- USB signals at all times, and thus could not enter a "dead-end" state where the detection unit was unable to sense the host/device mode of the downstream USB product.

35. In other words, Patent Owner (and Dr. Houh) only address the "third obvious location" I proposed for the detection unit and ignored the other locations, which were all outside the bridge.

36. Not only is Patent Owner's interpretation of the proposed Chang modification contrary to my express disclosure in ¶193 and the accompanying figure which shows the detection unit outside of the bridge, but it is unreasonable for the further reason that it would make no sense in view of my discussion (and the prior art disclosures) of using discrete, off-the-shelf, commercially available bridge, hub, and mux components. I discuss the tradeoffs of using existing/discrete components as well as a more integrated approach (*e.g.*, a custom chip) in my Original Declarations, and explain why each approach would be obvious. *See, e.g.,* EX1013, ¶¶200-201.

37. The Chang reference teaches both approaches (*i.e.*, discrete components and integrated chip) as well. For example, Chang teaches that its bridge 52 "may be implemented with a bridge chip for example OTi2108 of Ours Technology Inc. or other host-to-host transmission chip." Chang, [0020]. I also

Docusign Envelope ID: DE655A16-E3F5-468A-A919-8C76B01B0BE9

discussed using a variety of discrete, off-the-shelf, USB muxes that were commercially available. Using these discrete components—and in particular an existing bridge chip—would not allow for locating the detection unit inside the bridge. Patent Owner's strained reading of my proposed combinations would eliminate everything but an integrated solution.

38. To be clear, I also opined that an integrated solution would be obvious in view of Chang which teaches that "[t]o an integrated circuit (IC) designer, it is possible to integrate the bridge 52 within the hub control unit 46 and thereby the hub control unit will comprise both of a conventional hub control unit and a conventional bridge." *Id*., [0022]. But that was not the only opinion I rendered and any suggestion by Patent Owner to the contrary is plainly wrong. *See* EX1013, ¶¶88-96 (discussing discrete muxes), 97-99 (discussing host-to-host bridges and existing bridge chips), 152, 200-201.

B. Patent Owner Misunderstands How the Detection Unit Operates When *Located* in the Bridge

39. Putting aside the embodiments of the proposed modification discussed above that Patent Owner ignores, Patent Owner fundamentally misunderstands how the proposed modification operates when the detection unit is present in "a third obvious location," *i.e.*, the bridge. To review, I opined that "In a third obvious location, [the detection unit] could be located in the bridge to take advantage of existing logic and circuitry to, for example, process the output of the detection circuit

Docusign Envelope ID: DE655A16-E3F5-468A-A919-8C76B01B0BE9

in a manner similar to Chang II's CPU 135 (EX1015 (Chang II), [0038], Fig. 5)." EX1013, ¶193. Because this makes reference to Chang II, it is helpful to briefly review one or two aspects of Chang II's teachings. Fig. 5 of Chang II is shown below, with a path highlighted from the "second connection interface 12" (*i.e.*, the downstream port) to the detection unit 134. The same signal path also goes to the "second USB controller 132."

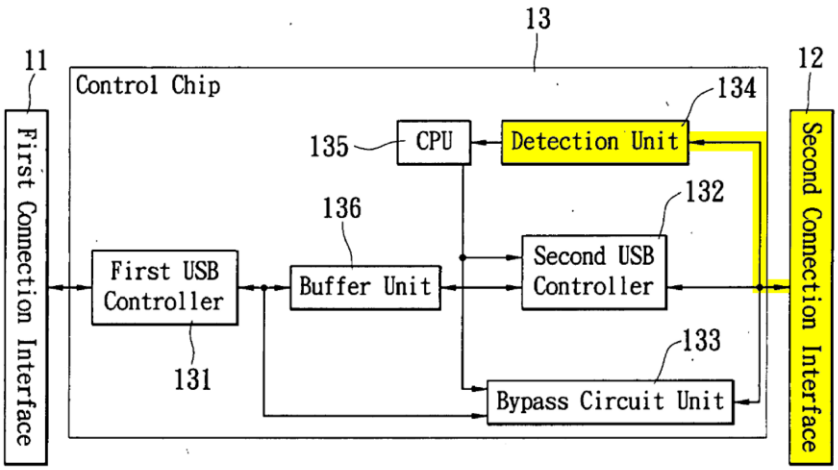

FIG. 5

Chang II, Fig. 5 (annotated).

40. Both the detection unit 134 and second USB controller 132 are located in control chip 13, which is part of Chang II's "bridge device 1." *See* Chang II, Fig. 1, [0034] ("[T]he present embodiment provides a control chip 13 for a data transmission bridge device 1, which includes: a first USB controller 131, a second USB controller 132, a bypass circuit unit 133, a detection unit 134, a central processing unit (CPU) 135, and a buffer unit 136."). Thus, even though detection

Docusign Envelope ID: DE655A16-E3F5-468A-A919-8C76B01B0BE9

unit 134 is within Chang II's "bridge device 1," it still receives a USB signal directly from the downstream port (*i.e.*, second connection interface 12).

41. This is why I referenced the teachings of Chang II when discussing the "third obvious location" of placing the detection unit in Chang's bridge. To be clear, at no point was I replacing Chang's bridge 52 with all of Chang II's bridge device 1. That would be a bodily incorporation I never proposed. Rather, I was applying Chang II's teaching that the detection unit still receives and senses a USB signal from the downstream port even when located in the bridge. That is why I proceeded to say in ¶193 that "the detection unit must connect to the downstream port to detect the mode, as shown in Chang II. Chang II, Fig. 5." In other words, I was simply discussing one obvious place for the *location* of the detection unit (*e.g.*, in the bridge), but was not changing its operation vis-à-vis detecting a signal provided directly from the downstream port (as disclosed in Chang II).

42. In this regard, the operation of the detection unit when located in the bridge is the same as when it is located outside the bridge (*viz.*, it has access to monitor/sense the incoming USB signals from the downstream port at all times). In other words, the detection unit is simply placed in a different location, but it operates the same way. Note also, that the detection unit in this context needs only a high impedance, passive view of the downstream port signals and wouldn't interfere with other activity/connections (*e.g.*, mux/crossbar connections) on the port.

Docusign Envelope ID: DE655A16-E3F5-468A-A919-8C76B01B0BE9

43. Notwithstanding my explanation, reference to Chang II, and explicit statement that the detection unit still "connect[s] to the downstream port to detect the mode," Patent Owner said my proposed modification of Chang disconnected the detection unit from the downstream port and reconnected it to one of the mux/crossbar outputs. That is incorrect and Patent Owner's "dead-end" argument is simply inapplicable to my proposed modification.

C. Even Accepting Patent Owner's Incorrect Understanding of the Proposed Modification, There Would Be No "Dead-End" Problem

44. Even if one accepted Patent Owner's hypothetical argument that the detection unit in the bridge could only receive and process signals coming through the multiplexer/crossbar (instead of directly from the downstream port), a POSITA would understand that such an embodiment would still work just fine, provided that a default/initialization/reset state were available. To start, even Dr. Houh acknowledged that the proposed modification could switch from a host-to-host connection to a host-to-device connection. EX1085, 262:23-263:13. The only dispute is whether the system could switch back. But, as long as the multiplexer/crossbar reverted to a default state where it routed an incoming USB signal from a downstream port to the bridge (where it could be detected and processed by the detection unit therein), there would be no "dead-end" problem.

45. In §II.A above, I note how ubiquitous and well-known it was (and is) for electronic system in general to have a default state. And in §II.B, I briefly discuss

Docusign Envelope ID: DE655A16-E3F5-468A-A919-8C76B01B0BE9

that USB systems (including hosts, hubs, and devices) provide for a default/reset/initialization condition, per the USB standards. I further note that a POSITA would have understood that any USB hub product (including my proposed combinations) has an initialization/default state so when it first powers up (*i.e.*, turns on), it is in a deterministic state (as opposed to an arbitrary state) and ready for operation. Patent Owner's product documents show a default connection state (which is a host-device connection because host/device detection occurs in the head-end instead of the bridge). EX2022, 11 ("USB port routing is direct to the Hub for initial connection as a normal USB device."); EX2023, 88 ("The firmware [can] switch between a default datapath [and host-to-host] secondary datapath.").

46. In §II.C, I provide additional detail regarding the signaling and protocol used to open/close USB data connections using the "Attachment" and "Removal" procedures defined in the USB standards.

47. According to Patent Owner, once the proposed combinations switched to a host-to-device connection, it would be stuck in that condition because the detection unit in the bridge would be cutoff from sensing a role change, and thus unable to toggle the select line(s) on the mux/crossbar to switch the incoming signals back to the bridge. This line of argument is repeated multiple times in the Patent Owner Responses and Dr. Houh's Supplemental Declarations (EX2019) for all Challenged Patents.

Docusign Envelope ID: DE655A16-E3F5-468A-A919-8C76B01B0BE9

48. But, as I explain in the Technology Background (§§II.B and II.C) above, the act of closing a data connection (*e.g.*, by using the USB standard SE0 signaling) acts as a form of "reset." This is true regardless of whether it is an upstream host or downstream device that terminates the data connection. *Id*. A POSITA would readily understand this, and if they didn't know it already they could easily reference the USB standards to confirm this operation. Thus, in the scenario where a host-device connection exists in the proposed modifications, the upstream host at the head end will already know when the data connection with a downstream USB product has been closed. The same is true if the host closes the connection.

49. And, as I explained in my Original Declarations, "[o]nce connected a host and device can disconnect electrically without having to physically disconnect plug and receptacle. The host can disconnect by turning off VBUS and tri-stating its data lines. The device can disconnect by turning off its speed resistor." EX1013, ¶58. And "[a]n Android product with a micro-USB connector can affect a dynamic mode switch by electrically detaching from the USB (¶58) and then changing the ID pin to the required state (floating for an attached host, ground for device) and reasserting the appropriate pull-up or pull-down resistors." *Id*., 85. Thus, when a dual-role device changes modes, it does so by first closing the existing data-connection, which will be known to the upstream host. Then, after a short waiting

Docusign Envelope ID: DE655A16-E3F5-468A-A919-8C76B01B0BE9

period, the normal connection process will begin anew, just as if the downstream product had been physically unplugged and then plugged back in to the port. §II.C.

50. A POSITA would understand that the Attachment/Removal protocols (which are fundamental operational principles in the USB standard) enables USB hot-plug (play-and-play) capabilities. *See* EX1018, §9.2.1 ("Dynamic Attachment and Removal"). This does away with Patent Owner's argument that "Chang II's control chip 13 cannot re-execute [the detection] process unless and until the control chip is somehow reconnected to the downstream USB port." POR, §VII.E.2.

51. Even though I did not import the flowchart of Chang II Fig. 6 into the proposed combinations, for the reasons I explained above, a POSITA would have understood (or at least found it obvious), that a dual-role USB product that switched modes without being unplugged would trigger the same USB removal/attachment protocols and restart the host/device detection process as if a new USB product had physically been plugged in to Chang II's downstream port (or a downstream port on my proposed modification). *See also* EX1085, 345:18-22. My deposition testimony (EX2021) at page 252:23-253:7 cited by Patent Owner should be understood in this context (*i.e.*, through the lens of a POSITA's understanding). These same USB principles of Attachment and Removal also do away with Patent Owner's argument concerning problems due to "retaining an out-of-date, and perhaps inapplicable, USB mode when a new [USB product] is connected." POR, §VII.E.2.

Docusign Envelope ID: DE655A16-E3F5-468A-A919-8C76B01B0BE9

52. Accordingly, when a connection is closed, the headend will know about it and can use this information (*e.g.*, the SE0 signaling which acts as a "reset") to notify the mux/crossbar to revert to a default state in which it routes the incoming USB signal to the bridge where the detection unit can then process it. Depending on the detected mode of the downstream USB product, the detection unit can maintain the existing routing to the bridge (*i.e.*, of a downstream host is detected) or toggle the mux/crossbar select line(s) to establish a host-to-device connection if a downstream device is detected. In this way, the proposed combinations avoid the "dead-end" condition hypothesized by Patent Owner.

53. The means to do this are straightforward and easy to implement for a POSITA, for both the Mux and Crossbar Implementations. The necessary information is already available in any hub that complies with the USB standards.

54. For the Mux Implementations, all that is required is sending a signal from the upstream host that will toggle the mux to its initial/default state (*i.e.*, routing signals to the bridge) when the upstream host knows that a data connection has been closed (*viz.*, in response to SE0). The well-known "OR" gate (or even a wired OR function that adds no addition gates) could be used to allow the head end signal to reset the mux select line(s) without disrupting normal operation of the detection unit. Of course, this is just one obvious example other approaches to accomplish the same thing are well within the knowledge and skill of a POSITA to implement and which

Docusign Envelope ID: DE655A16-E3F5-468A-A919-8C76B01B0BE9

"reset" approach to use is merely a design choice. For this reason (*i.e.*, because such things were (and are) well-known to POSITAs), the Challenged Patents do not discuss default/reset/initialization in any meaningful way.

55. Only one slight difference applies to the Crossbar Implementations, which is that any reset signaling would respect (*i.e.*, not disconnect) an existing host-to-host connection. This could be easily accomplished using basic logic such as the extremely well-known "if" condition, which is trivial to implement in either hardware or software (which one to use is merely a design choice). Nor is implementing this condition otherwise problematic from a system perspective. To the contrary, it is helpful because a system with only one bridge (which is the case in my proposed combinations) can only support one host-to-host connection at a time.[5] This way, persistence is maintained for an existing host-to-host connection and any other downstream USB products subsequently plugged in will be routed as host-device connections. If the products are indeed in USB device mode, they will work fine. If not, they would not be able to connect anyway because, as noted, the system only supports one host-to-host connection at a time anyway.

56. Even Dr. Houh acknowledged when testifying at deposition that the proposed modification would have an initial/default state in which the mux/crossbar

[5] The Challenged Patents recognize as much. *See, e.g.,* EX1005, 8:24-26.

Docusign Envelope ID: DE655A16-E3F5-468A-A919-8C76B01B0BE9

routed the incoming USB signals to the bridge:

> The issue with the combination that I've analyzed is that in the proposed combination by the petitioner, ***once it's determined the first time that a device type has been connected to the appropriate port that is initially going into the bridge***, then subsequent to that, the -- that device is set up to bypass the bridge, and there can be no subsequent detections of any change in what's plugged into that port after that time of the switch.

EX1084, 197:20-198:3 (emphasis added). Thus, Dr. Houh understood and knew that in my proposed combinations the USB signals would "***initially go[] into the bridge***" (*i.e.*, he recognized the existence of an initial/default condition that routed signals to the bridge for host/device detection). *Id*. (emphasis added). Given the existence of the initial default state where the mux/crossbar routes incoming USB signals to the bridge, it is trivial to do the same (*i.e.*, revert to routing signals to the bridge) any time the data connection with a downstream product is closed, such as when a dual-mode product switches roles (either for host to device or from device to host). As such, a POSITA (especially one familiar with USB operation) would recognize, there is no "dead-end" problem as Patent Owner speculates.

57. In summary, in my third alternative configuration as Patent Owner presents it (*i.e.*, where the detection unit is in the bridge and uses the mux/crossbar output to perform host/device detection), the mux/crossbar would be configured to revert to an initialization/reset/default state (unless the bridge was occupied)

Docusign Envelope ID: DE655A16-E3F5-468A-A919-8C76B01B0BE9

following "Removal" of a downstream USB product (*i.e.*, closing of a data connection) which always occurs when a dual-role device changes modes. At that point, a new "Attachment" procedure begins and incoming USB signal will be routed to the detection unit in the bridge for a determination of whether to toggle the mux/crossbar select lines (and thus send the USB signals directly to the hub) if a USB device is connected.

V. A USB MULTIPLEXER/CROSSBAR HAS MULTIPLE SWITCHES ('072 PATENT AND '962 PATENT)

58. Patent Owner asserts that a USB multiplexer does not have ***multiplexing switches*** (*i.e.*, plural switch***es***) on the basis that various USB multiplexers were marketed as a "switch." This is a superficial argument, as reference to the datasheets themselves plainly show there are multiple switches inside a USB multiplexer (which are commonly used to construct crossbar switches). For example, EX1060 shows two switches:

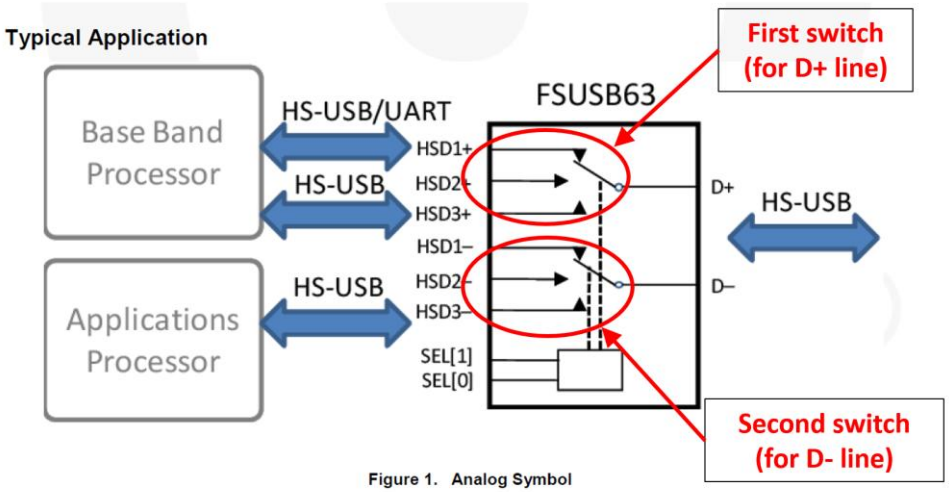

Docusign Envelope ID: DE655A16-E3F5-468A-A919-8C76B01B0BE9

EX1060, 1 (annotated). This is reflected in other datasheets as well.

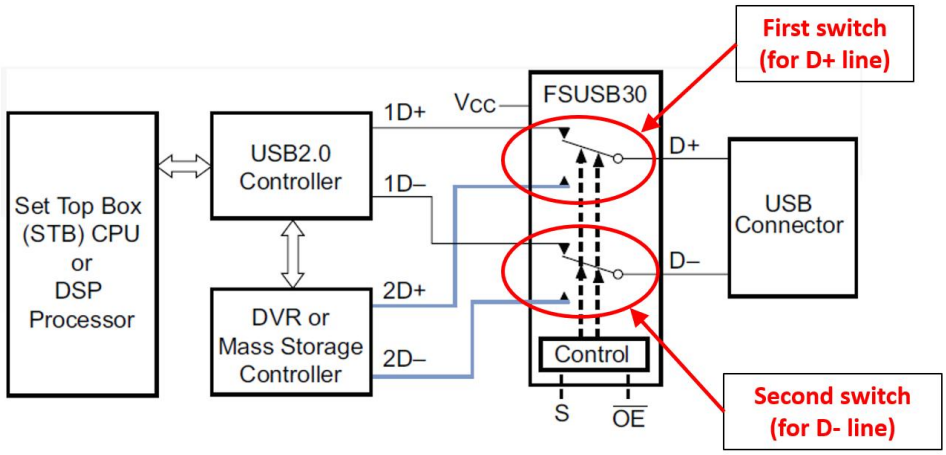

Figure 1. Typical Application

EX1068, 1 (annotated); *see also* EX1063, 8.

59. In contrast to other multiplexers (*i.e.*, non-USB muxes) which may only have a single switch, ***USB multiplexers*** typically (if not always) have multiple switches because the USB standard specifies the use of separate D+ and D- signal lines (which are physically distinct lines) for sending data. A POSITA would be well-aware of this requirement as it is one of the most basic concepts in USB and determines the number of physical pins the need to be present on any USB port or connector. *See, e.g.,* EX1018, 130 (showing USB cable with separate D+ and D- wires), *id*., 45 (§4.2.1 Electrical: introducing fundamental USB differential signaling), and 147-148 (§7.1 Signaling, and Figure 7-1 Transceiver Circuit) Because of the USB standard requirement for two physically separate data wires, component manufacturers typically made USB multiplexers that included two

Docusign Envelope ID: DE655A16-E3F5-468A-A919-8C76B01B0BE9

switches, one for each data wire (D+ and D-), as shown above. Thus use of two physically separate lines for sending a single data bit (*i.e.*, by measuring the voltage difference across the two lines) is commonly referred to in the art as "differential signaling" and was very well-known as an effective way to filter out noise (because the noise would be present on both lines). *Id.*, §§4.5, 7.1.

60. If a POSITA used a multiplexer containing only one switch for a USB application, they would actually need to use two multiplexers—one for the D+ signal line and another for the D- signal line, again resulting in the use of ***multiplexing switches*** (in the plural).

61. As a term of art in the broader networking context, the term "switch" is often used to describe a component (such as a network switch) that contains numerous (e.g., many thousands) of internal switches for routing network traffic. But, for convenience, the component may simply be called a "network switch." In the more specific context of USB, a similar usage/terminology applies (*i.e.*, a USB has multiple switches).

VI. CONCLUSION

62. I am aware that this declaration will be filed as evidence in an IPR/PGR proceeding before the PTAB. I am aware that making willfully false statements in my declaration are punishable by fine or imprisonment, or both (under 18 U.S.C. §1001), and thus such actions may compromise the validity of the IPR/PGR

Docusign Envelope ID: DE655A16-E3F5-468A-A919-8C76B01B0BE9

proceeding. All statements herein made by me of my own knowledge are true, and all statements made on information and belief are believed to be true.

63. I declare under penalty of perjury that the foregoing is true and correct. Executed this 17th day of January, 2025 in Berkeley, California.

_____ _____

Eric Welch