IN THE UNITED STATES PATENT AND TRADEMARK OFFICE

BEFORE THE PATENT TRIAL AND APPEAL BOARD

MICROCHIP TECHNOLOGY INC.,
Petitioner,

v.

APTIV TECHNOLOGIES AG AND APTIV TECHNOLOGIES LIMITED,
Patent Owners.

Case No. IPR2024-00230
U.S. Patent No. 11,176,072

PETITIONER'S OPPOSITION TO PATENT OWNER'S MOTION TO STRIKE

TABLE OF CONTENTS

I. INTRODUCTION 1

II. BACKGROUND 1

- **A. Petitioner's Opening Papers 1**
- **B. The Patent Owner Response (POR) 3**
- **C. Petitioner's Reply 4**

III. LEGAL STANDARD 5

IV. ARGUMENT 6

- **A. Petitioner's Reply Directly and Fairly Responds to the POR 6**
- **B. Petitioner Could Not Reasonably Anticipate PO's Argument 9**
- **C. PO Suffers No Prejudice 10**

V. CONCLUSION 10

TABLE OF AUTHORITIES

Page(s)

Cases

Axonics, Inc. v. Medtronic, Inc.,
75 F.4th 1374 (Fed. Cir. 2023) 6, 10

Belden Inc. v. Berk-Tek LLC,
805 F.3d 1064 (Fed. Cir. 2015) 5

Intelligent Bio-Systems, Inc. v. Illumina Cambridge, Ltd.,
821 F.3d 1359 (Fed. Cir. 2016) 8

Rembrandt Diagnostics, LP v. Alere, Inc.,
76 F.4th 1376 (Fed. Cir. 2023) .....*passim*

Other Authorities

37 C.F.R. §42.23(b) 5

I. INTRODUCTION

Patent Owner's ("PO") motion to strike is moot *ab initio* if the Board agrees with either of Petitioner's principal unpatentability arguments (neither of which PO moves to strike). *See* Paper 29 (Reply), §§IV.A.2, IV.A.3.a. Moreover, striking §IV.A.3.b of Petitioner's Reply (and corresponding Welch Reply paragraphs and EX1103) is unwarranted because the Reply directly responds to unforeseeable arguments raised by PO and falls squarely within the scope of a proper reply.

The POR manufactures a purported "structural flaw" only by misstating the operation of Petitioner's proposed combination. *See infra* §§II.A-B; Reply, §IV.A.3.a. After explaining how PO misconstrued Petitioner's combination, the Reply elaborates on why the combination still works, even under PO's presentation of it. *See infra* §II.C; Reply, §IV.A.3.b. This is the epitome of a fair reply. *See infra* §IV.A. PO's argument was not reasonably foreseeable because it creates a double standard (holding the prior art to a higher disclosure standard than the Challenged Patent) and creates written description and enablement issues with the Challenged Patent. *Id*., §IV.B. Moreover, PO suffers no prejudice as it is deposing Petitioner's expert and has a 5,600 word sur-reply to respond. *Id*., §IV.C.

II. BACKGROUND

A. Petitioner's Opening Papers

Tellingly, PO's motion says almost nothing about the Petition's proposed combination. Notwithstanding that the Challenged Patent's specification is silent

regarding a host/device "detection unit," Petitioner's opening papers addressed the function and operation of such a component. *See* Pet., 2, 33-34, 47-48; Welch (EX1013), ¶¶74-87, 159, 189-193. In this regard, Petitioner disclosed far more about host/device detection and mux/crossbar control than the Challenged Patent.

Further, Chang II expressly discloses a detection unit 134. *E.g.* Chang II (EX1015), Fig. 5, [0034], [0038]-[0039]. Petitioner's proposed Chang/Chang II combination discussed "[Chang II's] 'detection unit 134' for detecting whether the consumer product is host or device" (Pet., 41) and disclosed that "in view of Chang II and [a POSITA's knowledge], it would have been obvious for Chang's bridge and/or detection unit to control, *e.g.*, the select lines of the switch" (*id.*, 42).

The opening Welch declaration (¶¶192-193) elaborated on the detection unit operation and locations for placing it. For example, when discussing the combination, Mr. Welch provided the "example deployment of a detection unit (e.g., in view of Chang II)" (shown at right) with the detection unit ***outside*** the bridge. Welch, ¶192. He explains the "detection circuitry could be deployed in several obvious ways," and gives example locations, including "between the dual-role port 50 and mux." *Id.*, ¶193. Mr. Welch identified a "third obvious location" for the detection

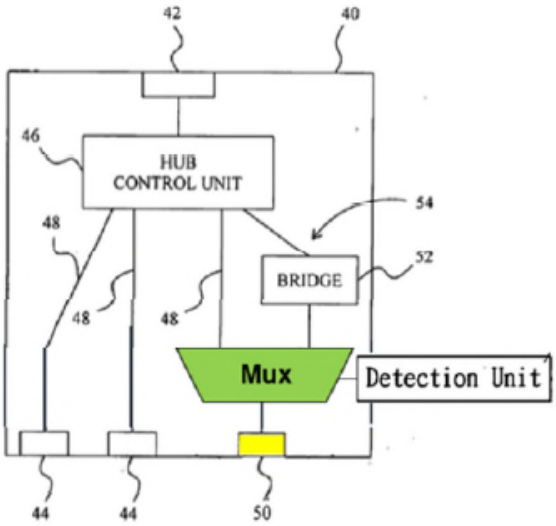

unit "in the bridge," explaining "the detection unit must connect to the downstream port to detect the mode, as shown in Chang II,"[1] where detection unit 134 is directly connected to second connection interface 12 (*i.e.*, the downstream port). *Id*.

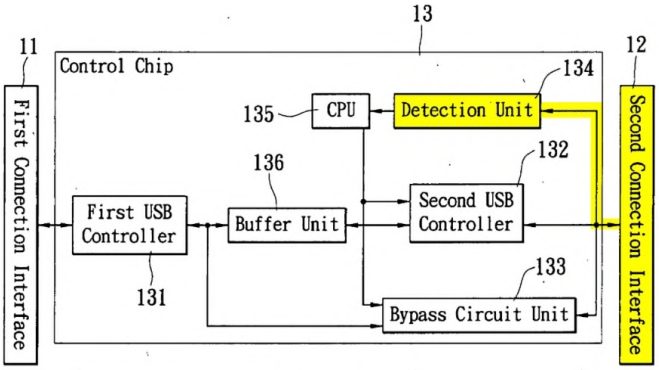

FIG. 5

Chang II, Fig. 5 (annotated). Thus, in Petitioner's combination, the detection unit remains connected to the downstream port, as Mr. Welch stated. Welch, ¶193.

B. The Patent Owner Response (POR)

Notwithstanding the disclosure above—all present in Petitioner's opening papers—the POR ignores all detection unit locations outside the bridge and manufactures an interpretation of the proposed combination in which the detection unit "disconnect[s]" from the downstream port(s) and creates what PO calls a "dead-end state." *E.g.* POR (Paper 25), 23-34. According to PO, Petitioner's combination "would not operate as described" because once it establishes a host-to-device

---

[1] There is no dispute the detection unit locations are the same for the crossbar and mux implementations. *See* Paper 35 (Mot.), fn.1.

connection, the bridge (and thus the detection unit inside of it) is "incapable of detecting whether a device is in host or device mode," placing the system in a "dead-end state." *Id*. The premise of PO's argument is that the detection unit receives and processes USB signals ***from the mux/crossbar***, and not from the downstream port itself. *Id*.

The POR reprises the same "dead-end" argument under a variety of headings. *See* POR, §§VII.C.1.a ("combination…disconnect[s] the detection unit that generates the bridging detection signal; and rendering it unable to detect the consumer device's operating mode"), VII.E.1 ("combination…[cannot return] from a device mode back to a host mode."), VII.E.2 ("the proposed combination enters a state from which it cannot return."), VII.E.4 (no expectation of success because of "loss of detection functionality once a device mode has been entered.").

C. Petitioner's Reply

Petitioner's Reply first debunks the false notion that the only detection unit location is in Chang's bridge 52. *See* Reply, §IV.A.2. Second, the Reply debunks the POR's strawman argument regarding the combination's operation vis-a-vis the detection unit (*viz.*, receiving USB signals from the mux/crossbar instead of directly from the downstream port). *Id.*, §IV.A.3.a. Third, due to the POR's pervasive discussion of the purported "dead-end" state, Petitioner explained how the combination would still work (under PO's artificial interpretation of it) in view of

standardized USB reset/default/initialization operations that take place when a USB data connection is closed/opened. *Id*., §IV.A.3.b; Welch Reply (EX1102), §§II.A-C and IV.C.

III. <u>LEGAL STANDARD</u>

A reply may "respond to arguments raised in the corresponding opposition." 37 C.F.R. §42.23(b). The 2019 Consolidated Trial Practice Guide ("CTPG") recognizes it may be appropriate for a "party [to] submit rebuttal evidence in support of its reply," including a "new expert declaration." CTPG, 73. "Since the need to rely on new evidence in response may not arise until a particular point has been raised in the [POR or ID], we have held that there is no blanket prohibition against the introduction of new evidence during an IPR." *Rembrandt Diagnostics, LP v. Alere, Inc.*, 76 F.4th 1376, 1384 (Fed. Cir. 2023).

Indeed, "the introduction of new evidence in the course of the trial is to be expected in [IPR] trial proceedings" and permissible "as long as the opposing party is given notice of the evidence and an opportunity to respond to it." *Rembrandt*, 76 F.4th at 1384 (quoting *Genzyme Therapeutic Prods. Ltd. P'ship v. Biomarin Pharm. Inc.*, 825 F.3d 1360, 1366 (Fed. Cir. 2016)). Thus, "a reply may be proper if it is responsive and simply expands on previously raised arguments." *Id*.

The Federal Circuit has "cautioned the Board not to 'parse arguments on reply with too fine of a filter.'" *Id*. (internal cites omitted); *see also Belden Inc. v. Berk-*

Tek LLC, 805 F.3d 1064, 1081–82 (Fed. Cir. 2015) (rebuttal evidence may "explain, repel, counteract, or disprove the evidence of the adverse party").

"[U]nder the Board's rules and consistent with the Supreme Court's decision in *SAS*, a petitioner is entitled to respond to new arguments made in a [POR]…'As we have regularly held, the petitioner [] may introduce new evidence after the petition stage if [it] is a legitimate reply to evidence introduced by the [PO].'" *Axonics, Inc. v. Medtronic, Inc.*, 75 F.4th 1374, 1380 (Fed. Cir. 2023) (citing *Apple Inc. v. Andrea Elecs. Corp.*, 949 F.3d 697, 706-707 (Fed. Cir. 2020).

IV. <u>ARGUMENT</u>

A. Petitioner's Reply Directly and Fairly Responds to the POR

To begin, Petitioner's Reply raises no new grounds, prior art references, or combinations (EX1103 is a textbook excerpt cited for the mundane proposition that many electronic devices can be reset). Petitioner's Reply maintains the same ground (*viz.*, Chang in view of Chang II and a POSITA's knowledge) from the Petition, including that one location for the detection unit is in the bridge. *E.g.*, Reply, §§IV.A.2, IV.A.3.a. PO asserts this is "incorrect and misleading," but identifies no new ground, prior art reference, or combination. Mot., 6-7. Rather, PO provides a laundry list of bullet points (*id.*, 5) that vastly overstates and inflates Petitioner's straightforward explanation of how a reset condition renders the combination fully operable *under PO's artificial and misguided reading of it*.[2]

Notwithstanding that Mr. Welch's original declaration expressly stated the combination's "detection unit must connect to the downstream port to detect the mode, as shown in Chang II" (Welch, ¶193), PO misconstrued the combination as requiring the detection unit to receive and process signals from the mux/crossbar (instead of the downstream port) to concoct a purported "dead-end" state. *See supra* §II.B. Petitioner's Reply at §IV.A.3.a explained why this interpretation was wrong, and Reply §IV.A.3.b elaborated on why the combination worked under PO's presentation of it. *Rembrandt*, 76 F.4th at 1385 (reply proper that "elaborates on the motivation-to-combine"). This is the epitome of a fair rebuttal that directly responds to an unforeseeable POR argument and is the reason reply briefs exist.

And PO's three cases can be distinguished on this basis. *Rembrandt* expressly distinguished *Ariosa* (Mot., 6-7) because the *Rembrandt* reply argument (as is the case here) "involves the same 'legal ground' based on 'the same prior art

---

[2] PO's trumped up list conflates to the same basic concept—the mux/crossbar resets to a default condition (avoiding PO's so-called "dead end" scenario) using existing, industry standard USB protocols for opening/closing USB connections without unplugging/replugging a USB product. This is consistent with the original Welch declaration that "a host and device can disconnect electrically without having to physically disconnect plug and receptacle." Welch, ¶58.

reference[s]' and the 'same legal argument'" and was "a legitimate reply" to the patent owner's arguments. *Rembrandt*, 76 F.4th at 1385. Similarly, in *Arista* (Mot., 7), the Board found "[t]he explanations in the Reply…[were] not responsive to [PO]'s arguments." IPR2016-00308, Paper 42, 14. Here, Petitioner merely elaborated on the Petition's Chang/Chang II combination with the detection unit in the bridge to provide additional implementation details explaining why PO's manufactured dead-end argument failed. *See supra* §II.A-C. And *Intelligent Bio-Systems* (Mot., 7) concerned a reply that presented a "new theory of invalidity" and "a number of [new] non-patent literature references" for "an entirely new rationale" to combine references. *Intelligent Bio-Systems, Inc. v. Illumina Cambridge, Ltd.*, 821 F.3d 1359, 1369 (Fed. Cir. 2016) (internal cites omitted). That is a far cry from the situation here involving the same prior art, the same detection unit location, and the same motivation to combine as the Petition.

PO also argues Petitioner provides "new rationales" because Mr. Welch's reply declaration says "persistence is maintained" when multiple USB products are connected. Mot., 7. But that is merely standard operation for a hub like Chang's, as explained in Mr. Welch's original declaration. *E.g.*, Welch, ¶65 ("Hubs support the simultaneous connection of multiple devices to one host"), ¶281 (Chang "provides '*persistent*' USB (*i.e.*, user could plug/unplug a downstream USB host without disrupting the connection of other USB products and vice versa)").

PO's argument (Mot., 6-7) that the Reply is necessary to make a *prima facie* obviousness case is baseless. Petitioner's opening papers explained (in more detail than the Challenged Patent) muxes/crossbars (Pet., §III.B.2), bridges (*id*., §III.C), and host/device detection (*id*., §III.B.1) with reference to well-known, commercial components a POSITA would readily know how to use (including in combination, *id*., §VII.A.1) for their intended purposes. *See also* Welch, §§VI.B.1-2, VI.C, IX.

B. Petitioner Could Not Reasonably Anticipate PO's Argument

PO asserts "Petitioner should have been aware of the dead-end problem before filing the Petition" and included it in the Petition. Mot., 8. But for the reasons explained in §II.A-B, Petitioner could not have reasonably anticipated PO's manufactured "dead-end" argument which misconstrues Petitioner's proposed combination in ways that would create written description and enablement problems for the Challenged Patent (*viz.*, PO creates a double standard by requiring the prior art combination to solve purported problems that would exist in the Challenged Patent which does not disclose—let alone explain—the role and operation of a signal detection circuit).

As the Federal Circuit noted in *Rembrandt*, "[s]ince the need to rely on new evidence in response may not arise until a particular point has been raised in the patent owner response or the institution decision, we have held that there is no blanket prohibition against the introduction of new evidence during an IPR." 76

F.4th at 1384; *see also id.* ("the very nature of [IPR] reply and sur-reply briefs are to respond (whether to refute, rebut, explain, discredit, and so on) to prior raised arguments"). That is precisely the case here. Indeed, PO's assertion that Petitioner's argument does not "respond to the POR" (Mot., 6-7) fails the red-face test. *See supra* §II.B-C; Reply, §§IV.A.2-3.

C. PO Suffers No Prejudice

PO contends it is deprived of a "fair opportunity to respond" to Petitioner's Reply. Mot., 9. Not so. PO already noticed Mr. Welch's deposition (Paper 34), Petitioner agreed to extend PO's sur-reply deadline (Paper 33), and PO gets the last word as part of its 5,600 word sur-reply. PO's complaint that it is "without the benefit of additional evidence, including direct expert testimony" rings especially hollow when it did not even request alternative relief of a sur-reply declaration. *See Axonics, Inc. v. Medtronic, Inc.*, 75 F.4th 1374, 1384 (Fed. Cir. 2023) (noting "Medtronic had not asked for leave to submit an additional expert declaration."). More fundamentally, the party prejudiced here would be Petitioner if the Board precludes it from responding to PO's "dead-end" argument, which could not have reasonably been anticipated given that such an argument (if accepted) creates enablement and written description problems for the Challenged Patent.

V. CONCLUSION

Petitioner respectfully requests the Board deny PO's motion to strike.

Respectfully submitted,

Dated: February 14, 2025

/Travis Jensen/

Travis Jensen, Reg. No. 60,087

CERTIFICATE OF SERVICE

The undersigned certifies that on February 14, 2025, a copy of the following was served in its entirety via electronic mail, upon the following attorneys of record for the Patent Owner:

Philip A. Rovner (provner@potteranderson.com)
Tannyr Pasvantis (TPasvantis@mofo.com)
Andrew L. Perito (aperito@mofo.com)
Daralyn J. Durie (ddurie@mofo.com)
Eric C. Wiener (ewiener@mofo.com)
Henry Huttinger (hhuttinger@mofo.com)
Jonathan A. Choa (jchoa@potteranderson.com)
Joyce C. Li (joyceli@mofo.com)
Timothy C. Saulsbury (tsaulsbury@mofo.com)

/Karen Johnson/
Karen Johnson