US 20150245658A1

(19) United States

(12) Patent Application Publication

Worm et al.

(10) Pub. No.: US 2015/0245658 A1

(43) Pub. Date: Sep. 3, 2015

(54) **CONTROL BODY FOR AN ELECTRONIC SMOKING ARTICLE**

(71) Applicant: **R.J. Reynolds Tobacco Company**, Winston-Salem, NC (US)

(72) Inventors: **Steven L. Worm**, Raleigh, NC (US); **Michael Ryan Galloway**, Winston-Salem, NC (US); **Frederic Philippe Ampolini**, Winston-Salem, NC (US); **Randy Lee McKnight**, Lewisville, NC (US); **David Glen Christopherson**, Raleigh, NC (US)

(73) Assignee: **R.J. Reynolds Tobacco Company**, Winston-Salem, NC (US)

(21) Appl. No.: **14/193,961**

(22) Filed: **Feb. 28, 2014**

Publication Classification

(51) **Int. Cl.**
A24F 47/00 (2006.01)

(52) **U.S. Cl.**
CPC *A24F 47/008* (2013.01)

(57) **ABSTRACT**

The present disclosure provides a control body adapted for use in an electronic smoking article. The control body includes a shell and a coupler that is adapted to connect the control body to a cartridge of an electronic smoking article. The coupler further is adapted to communicate a pressure reduction within the coupler to a pressure reduction space in the shell. Also positioned within the shell is an electronic circuit board having a pressure sensor attached thereto. The electronic circuit board can be positioned to be parallel to a central axis of the shell. A first end of the pressure sensor can be isolated within the pressure reduction space, and a second end of the pressure sensor can be in communication with a normal pressure space within the shell. One or more light emitting diodes can be attached to the electronic circuit board. At least a portion of the coupler can be light transmissive so that light from the LED is visible through the coupler.

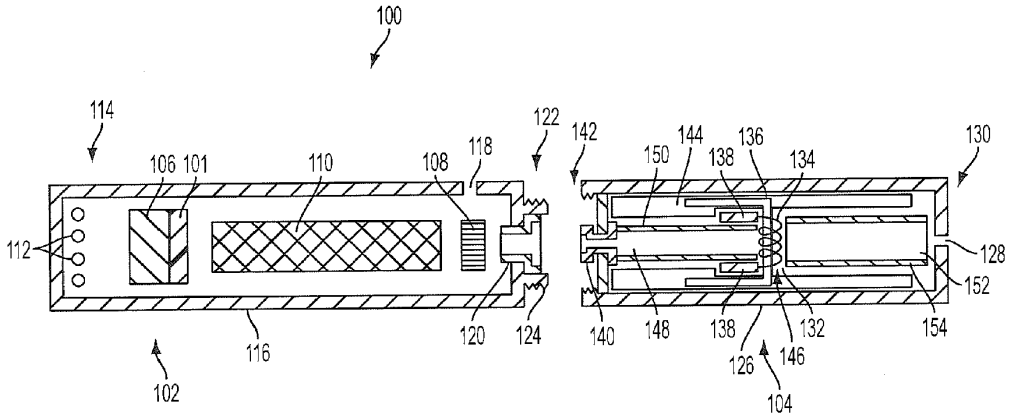

NJOY Exhibit 1004.001

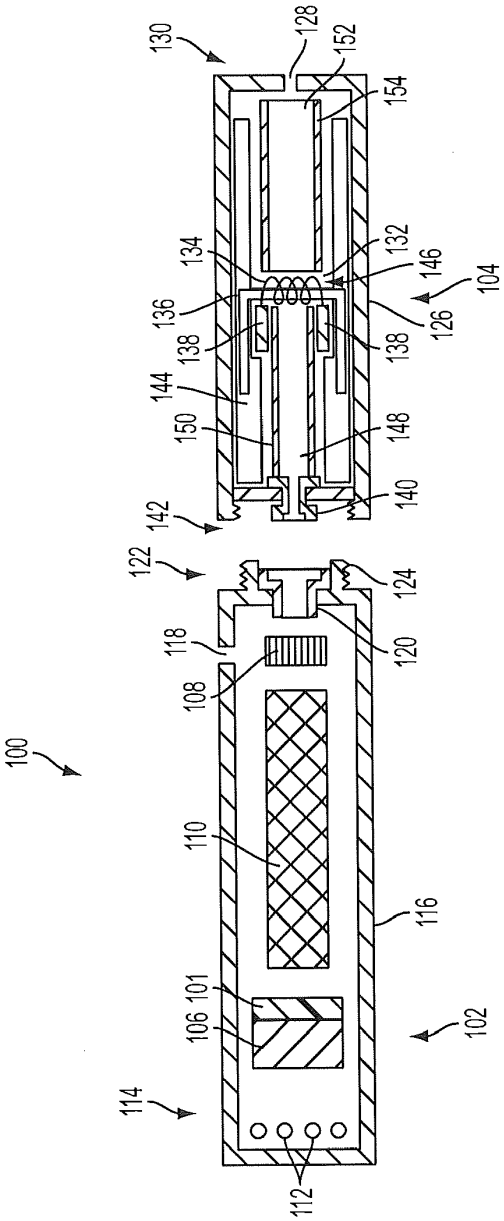
100
102
104
106
101
108
110
112
114
116
118
120
122
124
126
128
130
132
134
136
138
138
140
142
144
146
148
150
152
154

FIG. 1

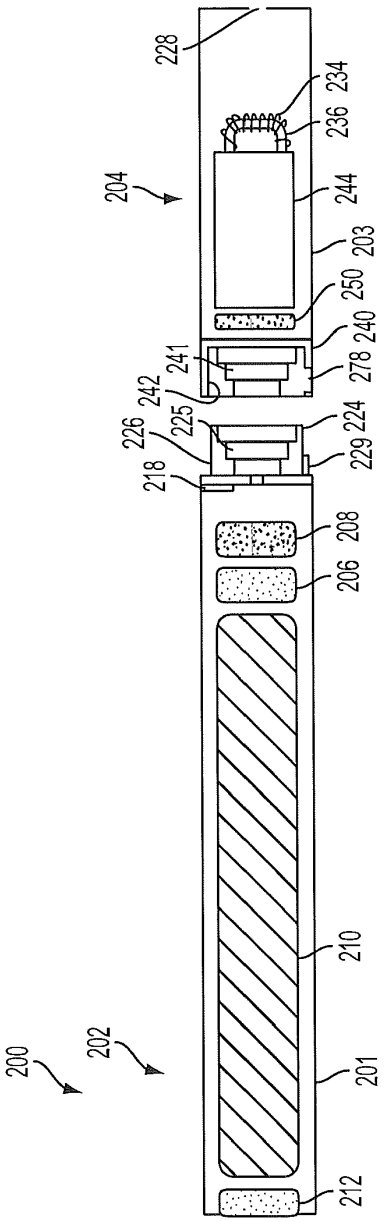
200
202
204
228
234
236
244
203
250
240
278
241
242
226
225
224
229
218
208
206
210
201
212

FIG. 2

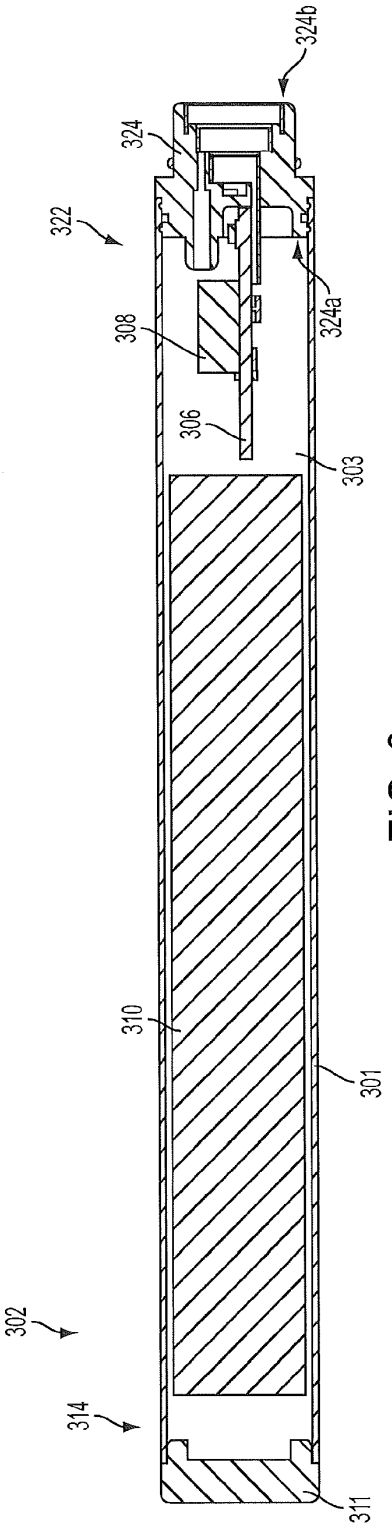

FIG. 3

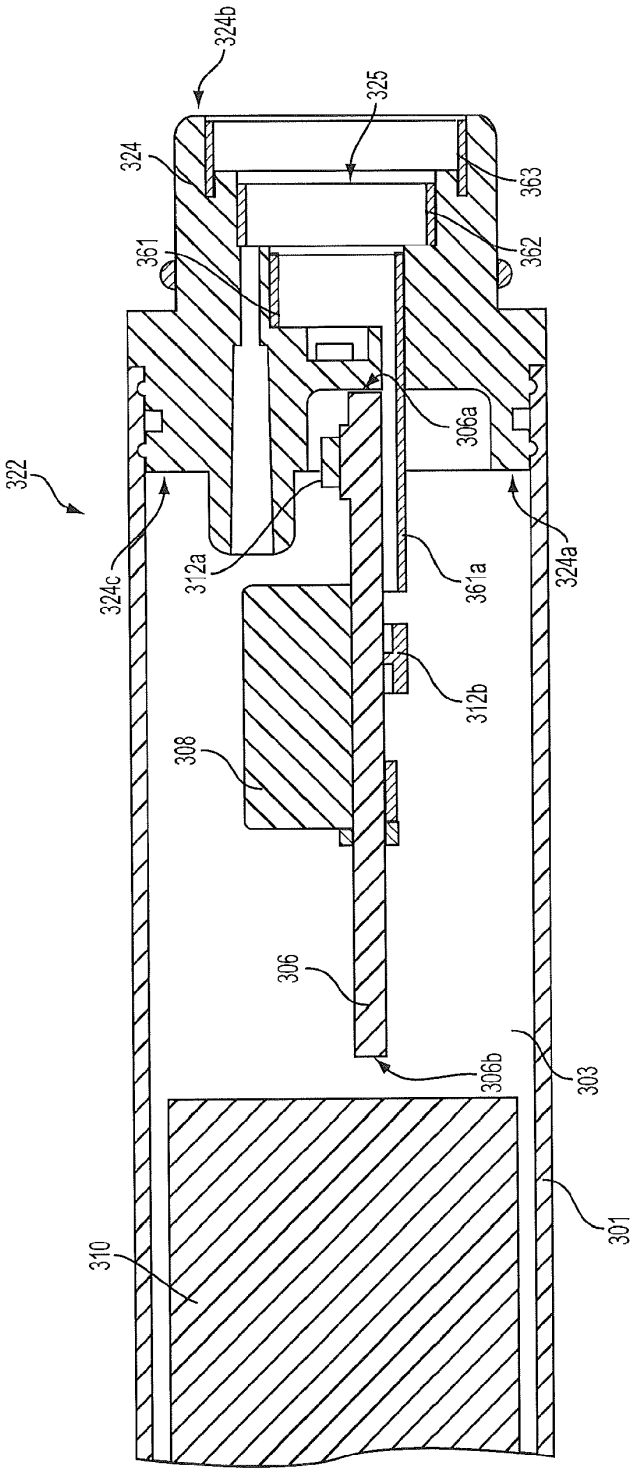
324b
325
324
363
361
362
322
306a
324c
312a
361a
324a
312b
308
306
306b
303
310
301

FIG. 4

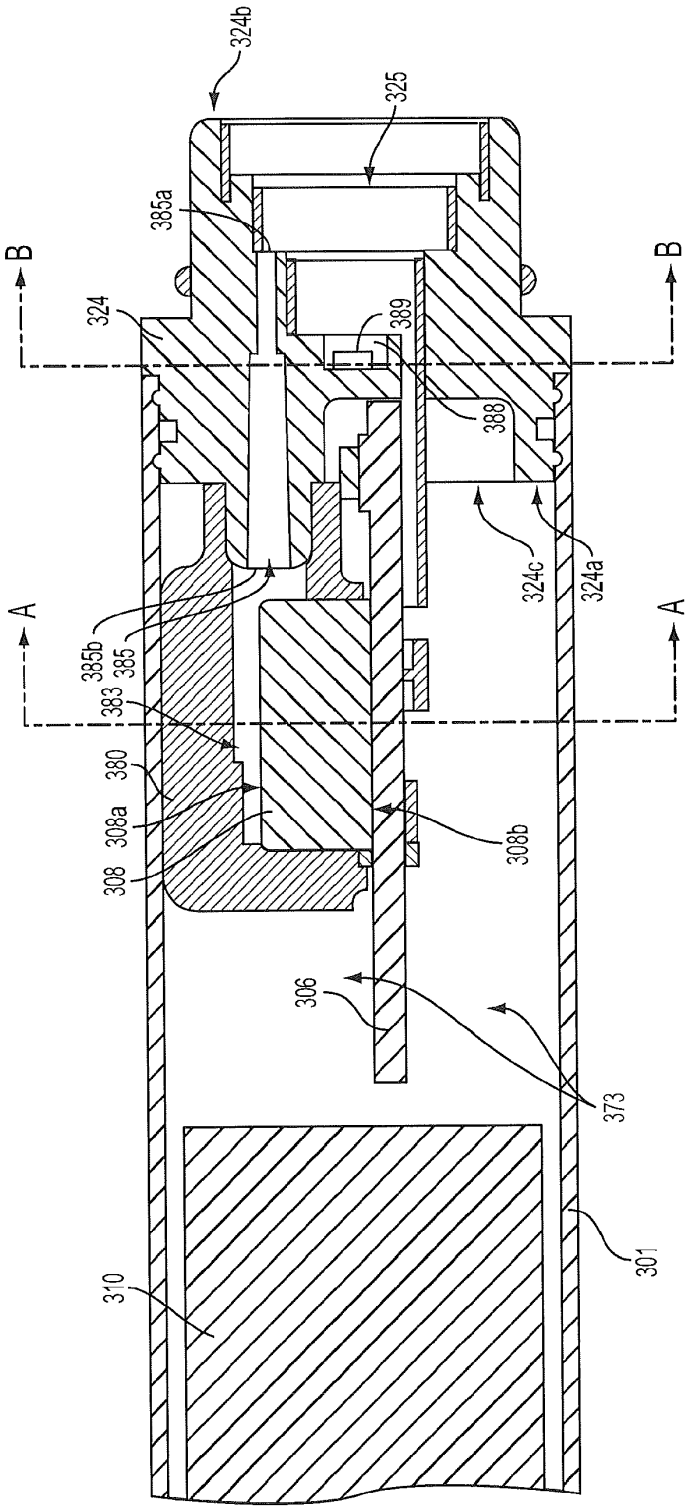
324b
325
385a
B
B
324
389
388
324c
324a
A
A
385b
385
383
380
308a
308
308b
306
373
301
310

FIG. 5

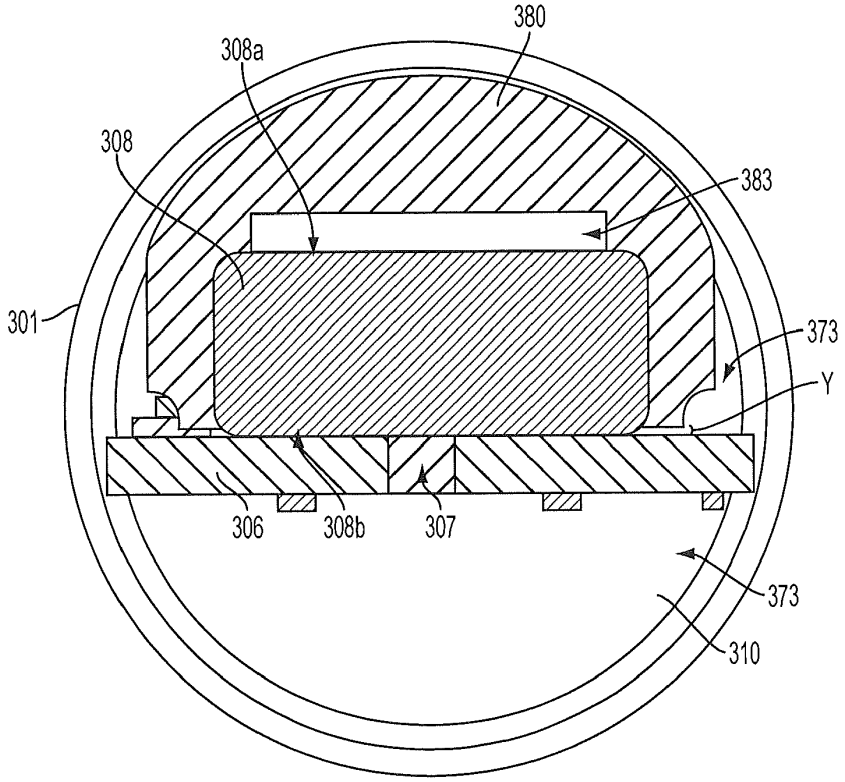

FIG. 6A

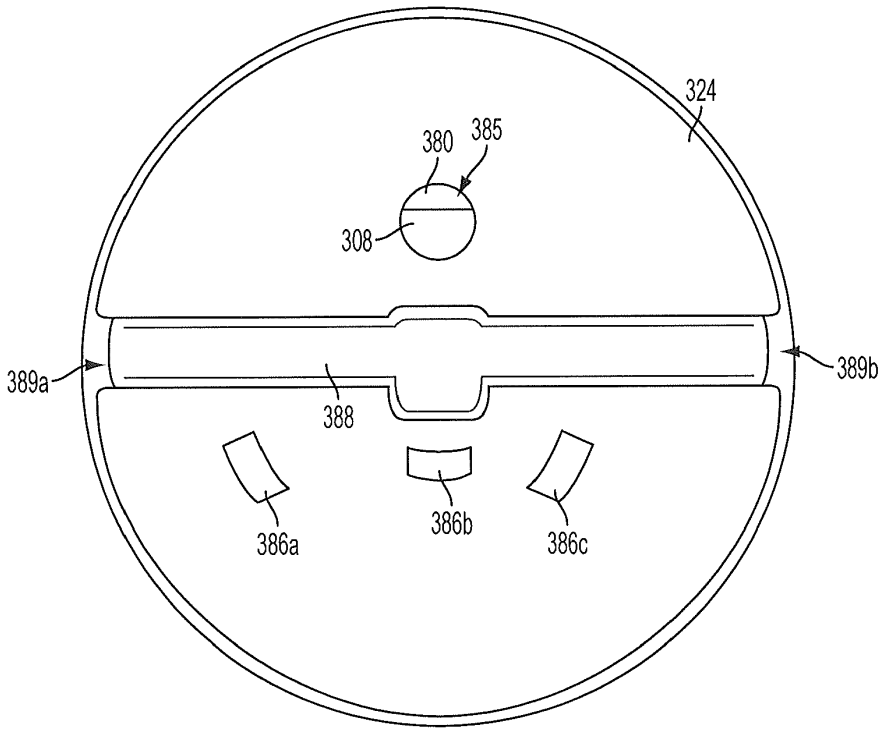

FIG. 6B

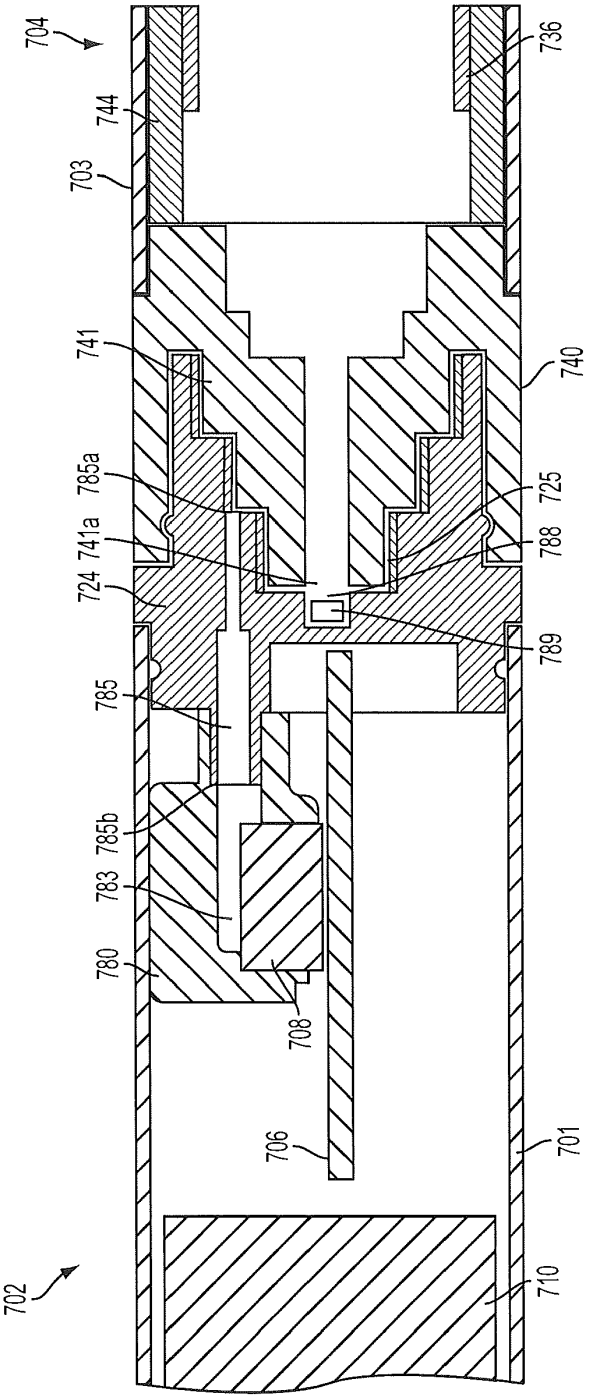
704
744
703
741
785a
741a
724
785
785b
783
780
702
736
740
725
788
789
708
706
701
710

FIG. 7

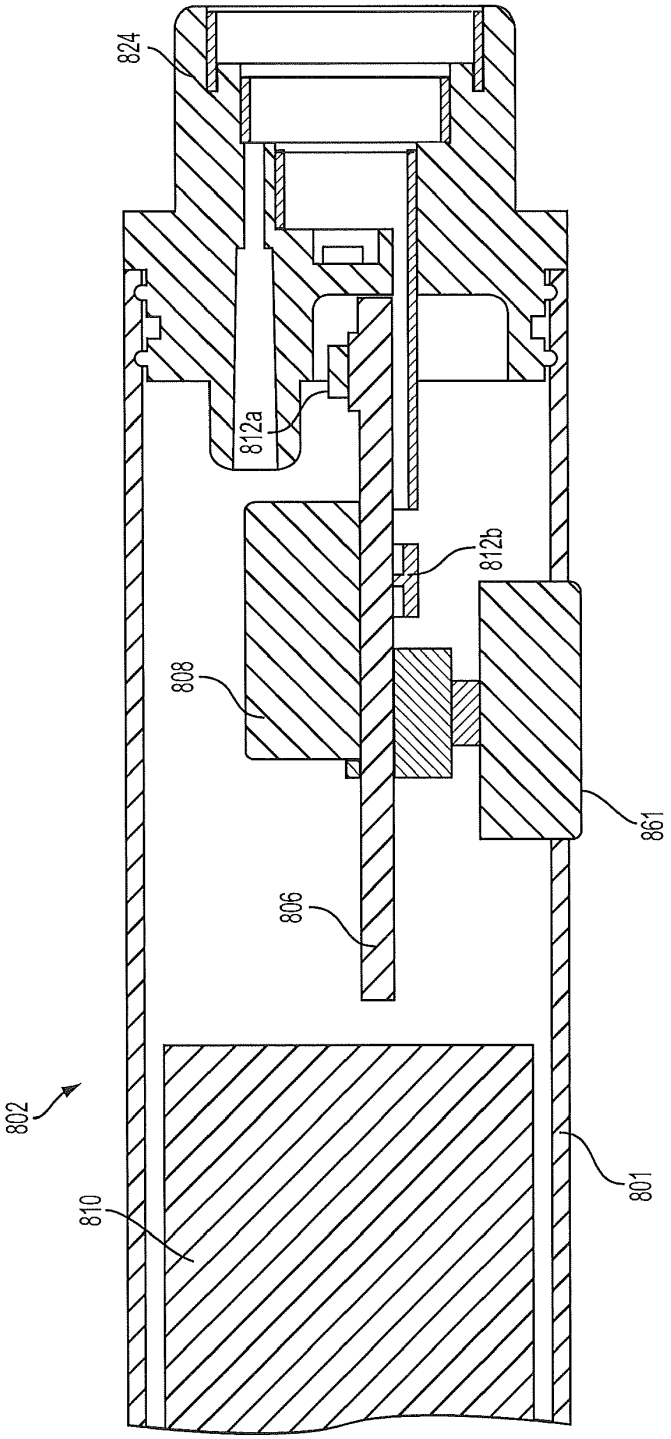

FIG. 8

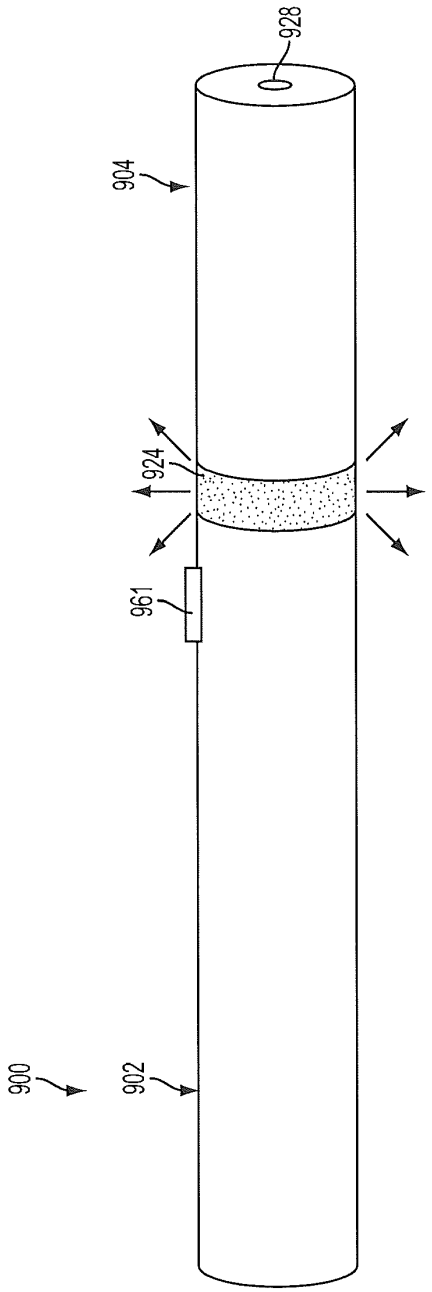

FIG. 9

NJOY Exhibit 1004.011

CONTROL BODY FOR AN ELECTRONIC SMOKING ARTICLE

FIELD OF THE DISCLOSURE

[0001] The present disclosure relates to aerosol delivery devices such as smoking articles. The smoking articles may be configured to heat a material, which may be made or derived from tobacco or otherwise incorporate tobacco, to form an inhalable substance for human consumption.

BACKGROUND

[0002] Many smoking devices have been proposed through the years as improvements upon, or alternatives to, smoking products that require combusting tobacco for use. Many of those devices purportedly have been designed to provide the sensations associated with cigarette, cigar, or pipe smoking, but without delivering considerable quantities of incomplete combustion and pyrolysis products that result from the burning of tobacco. To this end, there have been proposed numerous smoking products, flavor generators, and medicinal inhalers that utilize electrical energy to vaporize or heat a volatile material, or attempt to provide the sensations of cigarette, cigar, or pipe smoking without burning tobacco to a significant degree. See, for example, the various alternative smoking articles, aerosol delivery devices and heat generating sources set forth in the background art described in U.S. Pat. No. 7,726,320 to Robinson et al., U.S. Pat. Pub. No. 2013/0255702 to Griffith Jr. et al., U.S. Pat. Pub. No. 2014/0000638 to Sebastian et al., U.S. patent application Ser. No. 13/602,871 to Collett et al., filed Sep. 4, 2012, U.S. patent application Ser. No. 13/647,000 to Sears et al., filed Oct. 8, 2012, U.S. patent application Ser. No. 13/826,929 to Ampolini et al., filed Mar. 14, 2013, and U.S. patent application Ser. No. 14/011,992 to Davis et al., filed Aug. 28, 2013, which are incorporated herein by reference in their entirety.

[0003] It would be desirable to provide a smoking article that employs heat produced by electrical energy to provide the sensations of cigarette, cigar, or pipe smoking, that does so without combusting tobacco to any significant degree, that does so without the need of a combustion heat source, and that does so without necessarily delivering considerable quantities of incomplete combustion and pyrolysis products. Further, advances with respect to manufacturing electronic smoking articles would be desirable.

SUMMARY OF THE DISCLOSURE

[0004] The present disclosure relates to materials and combinations thereof useful in electronic smoking articles and like personal devices. In particular, the present disclosure relates to a control body that can include one or more elements useful to improve the function thereof.

[0005] The control body particularly can include an electronic circuit board therein that is configured for improved functioning of the device. For example, in some embodiments, the electronic circuit board is in an orientation that provides for improved communication between a pressure sensor and drawn air entering the device. This can incorporate a coupler element that includes an exterior opening that allows external air to enter the device and a pressure channel that communicates a pressure drop caused by the drawn air to an isolated segment of the device that includes a portion of the pressure sensor. Such coupler can particularly be useful to reduce or prevent passage of liquid from an attached cartridge through the coupler and into the control body and thus reduce or prevent contamination of the sensor or other electronic elements present in the control body.

[0006] In some embodiments, a control body for an electronic smoking article according to the present disclosure can comprise an elongated shell with an interior, a proximal end, and an opposing distal end. A coupler can be present and can have a body end that is in engagement with the proximal end of the shell and can have an opposing connector end that is configured to releasably engage a cartridge. An electrical power source can be included as well as an electronic circuit board, which can be positioned within the shell interior between the electrical power source and the coupler. The electronic circuit board particularly can include a control circuit, which can comprise a microcontroller, a microprocessor, or the like, and any further control components suitable for controlling power delivery from the power source and any further functions of the device. Further, the shell can have a central axis therethrough from the proximal end to the distal end, and the electronic circuit board can be oriented parallel to the central axis of the shell.

[0007] In further embodiments, the control body can comprise a pressure sensor attached to the electronic circuit board (i.e., is on the circuit board). The pressure sensor can be attached directly to the electronic circuit board, which can include a spacing factor, as further described herein. The shell interior of the control body can include a normal pressure space and a pressure reduction space, and a first end of the pressure sensor can be in fluid communication with the pressure reduction space while a second end of the pressure sensor can be in fluid communication with the normal pressure space. The body end of the coupler can include a wall, and the connector end of the coupler can have a central opening therethrough. Further, the coupler can include a pressure channel extending between a first end in fluid communication with the central opening and a second end that opens through the wall at the body end of the coupler to be in fluid communication with the pressure reduction space. In some embodiments, the pressure channel can be integrally formed in the coupler. The control body can comprise a sealing member configured to form an air tight seal around the pressure sensor and the second end of the pressure channel and thus define the pressure reduction space encompassing the opening at the second end of the pressure channel and the first end of the pressure sensor. Further, the sealing member can be in physical contact with an inner surface of the shell.

[0008] The coupler can include an air inlet channel in fluid communication with the central opening therein. In some embodiments, the air inlet channel can be formed entirely within the coupler body. An air inlet aperture can be present in the exterior surface of the coupler and be in fluid communication with the air inlet. An ambient air flow pathway can extend from the exterior of the coupler (i.e., through the air inlet aperture), through the coupler body, and through the central opening. The control circuit of the control body can be configured to establish electrical current flow from the electrical power source when the pressure sensor detects a reduced pressure in the pressure reduction space relative to the pressure in the normal pressure space. In some embodiments, the electronic circuit board can be positioned entirely within the normal pressure space.

[0009] In further embodiments, the control body can comprise at least one light emitting diode (LED) attached to the electronic circuit board. At least a portion of the coupler can

be light transmissive such that light from the LED is visible through the coupler. Further, the control circuit can be configured to cause an LED to emit a defined lighting signal that corresponds to a status of the electronic smoking article. In some embodiments, the control body can comprise an input element. The control circuit can be configured to cause the at least one LED to emit the defined lighting signal in response to an input from the input element. The input element can be a manual input element (e.g., a pushbutton or touchscreen). In some embodiments, the input element can be at least partially light transmissive. The input to the LED also may be automatically generated by the control circuit in response to detecting a status of the smoking article. If desired, the control body can comprise an LED positioned at the distal end of the shell.

[0010] In other embodiments, a control body for an electronic smoking article can comprise an elongated shell with an interior, a proximal end, and an opposing distal end. The control body further can comprise a coupler formed of an elongated body having a first end that forms a wall and that engages the proximal end of the shell and a second end that comprises a cavity configured to releasably engage a cartridge, wherein the coupler includes a pressure channel extending between a first end that is in fluid communication with the cavity and a second end that opens through the wall at the first end of the coupler, wherein the coupler includes an air inlet channel in fluid communication with the cavity and an air inlet aperture in an exterior surface of the coupler, and wherein the coupler has a longitudinal axis extending from the first end to the second end, and the first end of the pressure channel is spatially separated from the air inlet channel relative to the longitudinal axis of the coupler. The control body further can comprise one or more additional components, such as a power source, a microprocessor or other control component, or the like. In some embodiments, the first end of the pressure channel in the coupler can be spatially separated from the air inlet channel so as to be relatively nearer the second end of the coupler.

[0011] In further embodiments, the present disclosure can provide an electronic smoking article. Such smoking article can comprise a control body as described herein and a cartridge comprising an aerosol precursor composition and a heater adapted to vaporize the aerosol precursor composition.

BRIEF DESCRIPTION OF THE FIGURES

[0012] Having thus described the disclosure in the foregoing general terms, reference will now be made to the accompanying drawings, which are not necessarily drawn to scale, and wherein:

[0013] FIG. **1** is a sectional view through an electronic smoking article comprising a control body and a cartridge;

[0014] FIG. **2** is a sectional view through an electronic smoking article comprising a cartridge and a control body according to an example embodiment of the present disclosure;

[0015] FIG. **3** is a sectional view through a control body of an electronic smoking article according to an example embodiment of the present disclosure;

[0016] FIG. **4** is a detailed view of the proximal end of the control body illustrated in FIG. **3**;

[0017] FIG. **5** is a detailed view of the proximal end of the control body illustrated in FIG. **3** that also illustrates a sealing member;

[0018] FIG. **6**A is a cross-section through Line A-A of FIG. **5**;

[0019] FIG. **6**B is a cross-section through Line B-B of FIG. **5**;

[0020] FIG. **7** is a partial sectional view of an electronic smoking article according a further example embodiment of the present disclosure showing a control body connected to a cartridge via the control body coupler and the cartridge base;

[0021] FIG. **8** is a sectional view of the proximal end a control body of an electronic smoking article according to a further example embodiment of the present disclosure that illustrates an input element; and

[0022] FIG. **9** is a perspective view of an electronic smoking article according to an example embodiment of the present disclosure showing a control body attached to a cartridge through a light transmissive coupler.

DETAILED DESCRIPTION

[0023] The present disclosure will now be described more fully hereinafter with reference to exemplary embodiments thereof. These exemplary embodiments are described so that this disclosure will be thorough and complete, and will fully convey the scope of the disclosure to those skilled in the art. Indeed, the disclosure may be embodied in many different forms and should not be construed as limited to the embodiments set forth herein; rather, these embodiments are provided so that this disclosure will satisfy applicable legal requirements. As used in the specification, and in the appended claims, the singular forms "a", "an", "the", include plural referents unless the context clearly dictates otherwise.

[0024] The present disclosure provides descriptions of aerosol delivery devices or smoking articles, such as so-called "e-cigarettes." It should be understood that the mechanisms, components, features, and methods may be embodied in many different forms and associated with a variety of articles.

[0025] In this regard, the present disclosure provides descriptions of aerosol delivery devices that use electrical energy to heat a material (preferably without combusting or pyrolyzing the material to any significant degree) to form an inhalable substance; such articles most preferably being sufficiently compact to be considered "hand-held" devices. An aerosol delivery device may provide some or all of the sensations (e.g., inhalation and exhalation rituals, types of tastes or flavors, organoleptic effects, physical feel, use rituals, visual cues such as those provided by visible aerosol, and the like) of smoking a cigarette, cigar, or pipe, without any substantial degree of combustion or pyrolysis of any component of that article or device. The aerosol delivery device may not produce smoke in the sense of the aerosol resulting from by-products of combustion or pyrolysis of tobacco, but rather, that the article or device may yield vapors (including vapors within aerosols that can be considered to be visible aerosols that might be considered to be described as smoke-like) resulting from volatilization or vaporization of certain components of the article or device. In highly preferred embodiments, aerosol delivery devices may incorporate tobacco and/or components derived from tobacco.

[0026] Aerosol delivery devices of the present disclosure also can be characterized as being vapor-producing articles, smoking articles, or medicament delivery articles. Thus, such articles or devices can be adapted so as to provide one or more substances (e.g., flavors and/or pharmaceutical active ingredients) in an inhalable form or state. For example, inhalable substances can be substantially in the form of a vapor (i.e., a

substance that is in the gas phase at a temperature lower than its critical point). Alternatively, inhalable substances can be in the form of an aerosol (i.e., a suspension of fine solid particles or liquid droplets in a gas). For purposes of simplicity, the term "aerosol" as used herein is meant to include vapors, gases and aerosols of a form or type suitable for human inhalation, whether or not visible, and whether or not of a form that might be considered to be smoke-like.

[0027] In use, aerosol delivery devices of the present disclosure may be subjected to many of the physical actions employed by an individual in using a traditional type of smoking article (e.g., a cigarette, cigar or pipe that is employed by lighting and inhaling tobacco). For example, the user of an aerosol delivery device of the present disclosure can hold that article much like a traditional type of smoking article, draw on one end of that article for inhalation of aerosol produced by that article, take puffs at selected intervals of time, etc.

[0028] Aerosol delivery devices of the present disclosure generally include a number of components provided within an outer body or shell. The overall design of the outer body or shell can vary, and the format or configuration of the outer body that can define the overall size and shape of the aerosol delivery device can vary. Typically, an elongated body resembling the shape of a cigarette or cigar can be a formed from a single, unitary shell; or the elongated body can be formed of two or more separable pieces. For example, an aerosol delivery device can comprise an elongated shell or body that can be substantially tubular in shape and, as such, resemble the shape of a conventional cigarette or cigar. In one embodiment, all of the components of the aerosol delivery device are contained within one outer body or shell. Alternatively, an aerosol delivery device can comprise two or more shells that are joined and are separable. For example, an aerosol delivery device can possess at one end a control body comprising an outer body or shell containing one or more reusable components (e.g., a rechargeable battery and various electronics for controlling the operation of that article), and at the other end and removably attached thereto an outer body or shell containing a disposable portion (e.g., a disposable flavor-containing cartridge). More specific formats, configurations and arrangements of components within the single shell type of unit or within a multi-piece separable shell type of unit will be evident in light of the further disclosure provided herein. Additionally, various aerosol delivery device designs and component arrangements can be appreciated upon consideration of the commercially available electronic aerosol delivery devices, such as those representative products listed in the background art section of the present disclosure.

[0029] Aerosol delivery devices of the present disclosure most preferably comprise some combination of a power source (i.e., an electrical power source), at least one control component (e.g., means for actuating, controlling, regulating and ceasing power for heat generation, such as by controlling electrical current flow the power source to other components of the article—e.g., a microcontroller), a heater or heat generation component (e.g., an electrical resistance heating element or component commonly referred to as an "atomizer"), an aerosol precursor composition (e.g., commonly a liquid capable of yielding an aerosol upon application of sufficient heat, such as ingredients commonly referred to as "smoke juice," "e-liquid" and "e-juice"), and a mouthend region or tip for allowing draw upon the aerosol delivery device for aerosol inhalation (e.g., a defined air flow path through the article such that aerosol generated can be withdrawn therefrom upon draw). Exemplary formulations for aerosol precursor materials that may be used according to the present disclosure are described in U.S. Pat. Pub. No. 2013/0008457 to Zheng et al. and U.S. patent application Ser. No. 13/536,438 to Sebastian et al., filed Jun. 28, 2012, the disclosures of which are incorporated herein by reference in their entirety.

[0030] Alignment of the components within the aerosol delivery device can vary. In specific embodiments, the aerosol precursor composition can be located near an end of the article (e.g., within a cartridge, which in certain circumstances can be replaceable and disposable), which may be proximal to the mouth of a user so as to maximize aerosol delivery to the user. Other configurations, however, are not excluded. Generally, the heating element can be positioned sufficiently near the aerosol precursor composition so that heat from the heating element can volatilize the aerosol precursor (as well as one or more flavorants, medicaments, or the like that may likewise be provided for delivery to a user) and form an aerosol for delivery to the user. When the heating element heats the aerosol precursor composition, an aerosol is formed, released, or generated in a physical form suitable for inhalation by a consumer. It should be noted that the foregoing terms are meant to be interchangeable such that reference to release, releasing, releases, or released includes form or generate, forming or generating, forms or generates, and formed or generated. Specifically, an inhalable substance is released in the form of a vapor or aerosol or mixture thereof. Additionally, the selection of various aerosol delivery device components can be appreciated upon consideration of the commercially available electronic aerosol delivery devices, such as those representative products listed in the background art section of the present disclosure.

[0031] An aerosol delivery device incorporates a battery or other electrical power source to provide current flow sufficient to provide various functionalities to the article, such as resistive heating, powering of control systems, powering of indicators, and the like. The power source can take on various embodiments. Preferably, the power source is able to deliver sufficient power to rapidly heat the heating member to provide for aerosol formation and power the article through use for the desired duration of time. The power source preferably is sized to fit conveniently within the aerosol delivery device so that the aerosol delivery device can be easily handled; and additionally, a preferred power source is of a sufficiently light weight to not detract from a desirable smoking experience.

[0032] One example embodiment of an aerosol delivery device **100** is provided in FIG. **1**. As seen in the cross-section illustrated therein, the aerosol delivery device **100** can comprise a control body **102** and a cartridge **104** that can be permanently or detachably aligned in a functioning relationship. Although a threaded engagement is illustrated in FIG. **1**, it is understood that further means of engagement may be employed, such as a press-fit engagement, interference fit, a magnetic engagement, or the like. In particular, connection components, such as further described herein may be used. For example, the control body may include a coupler that is adapted to engage a connector on the cartridge. Such couplers and connectors are further discussed herein.

[0033] In specific embodiments, one or both of the control body **102** and the cartridge **104** may be referred to as being disposable or as being reusable. For example, the control body may have a replaceable battery or a rechargeable battery and thus may be combined with any type of recharging tech-

NJOY Exhibit 1004.014

nology, including connection to a typical electrical outlet, connection to a car charger (i.e., cigarette lighter receptacle), and connection to a computer, such as through a universal serial bus (USB) cable. For example, an adaptor including a USB connector at one end and a control body connector at an opposing end is disclosed in U.S. patent application Ser. No. 13/840,264 to Novak et al., filed Mar. 15, 2013, which is incorporated herein by reference in its entirety. Further, in some embodiments the cartridge may comprise a single-use cartridge, as disclosed in U.S. patent application Ser. No. 13/603,612 to Chang et al., filed Sep. 5, 2012, which is incorporated herein by reference in its entirety.

[0034] In the exemplified embodiment, the control body **102** includes a control component **106** (e.g., a microcontroller), a flow sensor **108**, and a battery **110**, which can be variably aligned, and can include a plurality of indicators **112** at a distal end **114** of an outer body **116**. The indicators **112** can be provided in varying numbers and can take on different shapes and can even be an opening in the body (such as for release of sound when such indicators are present). In the exemplified embodiment, a haptic feedback component **101** is included with the control component **106**. As such, the haptic feedback component may be integrated with one or more components of a smoking article for providing vibration or like tactile indication of use or status to a user. See, for example, the disclosure of U.S. patent application Ser. No. 13/946,309 to Galloway et al., filed Jul. 19, 2013, which is incorporated herein by reference in its entirety.

[0035] An air intake **118** may be positioned in the outer body **116** of the control body **102**. A coupler **120** also is included at the proximal attachment end **122** of the control body **102** and may extend into a control body projection **124** to allow for ease of electrical connection with an atomizer or a component thereof, such as a resistive heating element (described below) when the cartridge **104** is attached to the control body. Although the air intake **118** is illustrated as being provided in the outer body **116**, in another embodiment the air intake may be provided in a coupler as described, for example, in U.S. patent application Ser. No. 13/841,233 to DePiano et al., filed Mar. 15, 2013.

[0036] The cartridge **104** includes an outer body **126** with a mouth opening **128** at a mouthend **130** thereof to allow passage of air and entrained vapor (i.e., the components of the aerosol precursor composition in an inhalable form) from the cartridge to a consumer during draw on the aerosol delivery device **100**. The aerosol delivery device **100** may be substantially rod-like or substantially tubular shaped or substantially cylindrically shaped in some embodiments. In other embodiments, further shapes and dimensions are encompassed—e.g., a rectangular or triangular cross-section, or the like.

[0037] The cartridge **104** further includes an atomizer **132** comprising a resistive heating element **134** (e.g., a wire coil) configured to produce heat and a liquid transport element **136** (e.g., a wick) configured to transport a liquid. Various embodiments of materials configured to produce heat when electrical current is applied therethrough may be employed to form the resistive heating element **134**. Example materials from which the wire coil may be formed include Kanthal (FeCrAl), Nichrome, Molybdenum disilicide ($MoSi_2$), molybdenum silicide (MoSi), Molybdenum disilicide doped with Aluminum ($Mo(Si,Al)_2$), and ceramic (e.g., a positive temperature coefficient ceramic). Further to the above, representative heating elements and materials for use therein are described in U.S. Pat. No. 5,060,671 to Counts et al.; U.S. Pat. No. 5,093,894 to Deevi et al.; U.S. Pat. No. 5,224,498 to Deevi et al.; U.S. Pat. No. 5,228,460 to Sprinkel Jr., et al.; U.S. Pat. No. 5,322,075 to Deevi et al.; U.S. Pat. No. 5,353,813 to Deevi et al.; U.S. Pat. No. 5,468,936 to Deevi et al.; U.S. Pat. No. 5,498,850 to Das; U.S. Pat. No. 5,659,656 to Das; U.S. Pat. No. 5,498,855 to Deevi et al.; U.S. Pat. No. 5,530,225 to Hajaligol; U.S. Pat. No. 5,665,262 to Hajaligol; U.S. Pat. No. 5,573,692 to Das et al.; and U.S. Pat. No. 5,591,368 to Fleischhauer et al., the disclosures of which are incorporated herein by reference in their entireties.

[0038] Electrically conductive heater terminals **138** (e.g., positive and negative terminals) at the opposing ends of the heating element **134** are configured to direct current flow through the heating element and configured for attachment to the appropriate wiring or circuit (not illustrated) to form an electrical connection of the heating element with the battery **110** when the cartridge **104** is connected to the control body **102**. Specifically, a plug **140** may be positioned at a distal attachment end **142** of the cartridge **104**. When the cartridge **104** is connected to the control body **102**, the plug **140** engages the coupler **120** to form an electrical connection such that current controllably flows from the battery **110**, through the coupler and plug, and to the heating element **134**. The outer body **126** of the cartridge **104** can continue across the distal attachment end **142** such that this end of the cartridge is substantially closed with the plug **140** protruding therefrom.

[0039] A liquid transport element can be combined with a reservoir to transport an aerosol precursor composition to an aerosolization zone. In the embodiment shown in FIG. **1**, the cartridge **104** includes a reservoir layer **144** comprising layers of nonwoven fibers formed into the shape of a tube encircling the interior of the outer body **126** of the cartridge, in this embodiment. An aerosol precursor composition is retained in the reservoir layer **144**. Liquid components, for example, can be sorptively retained by the reservoir layer **144**. The reservoir layer **144** is in fluid connection with a liquid transport element **136**. The liquid transport element **136** transports the aerosol precursor composition stored in the reservoir layer **144** via capillary action to an aerosolization zone **146** of the cartridge **104**. As illustrated, the liquid transport element **136** is in direct contact with the heating element **134** that is in the form of a metal wire coil in this embodiment.

[0040] It is understood that an aerosol delivery device that can be manufactured according to the present disclosure can encompass a variety of combinations of components useful in forming an electronic aerosol delivery device. Reference is made for example to the reservoir and heater system for controllable delivery of multiple aerosolizable materials in an electronic smoking article disclosed in U.S. patent application Ser. No. 13/536,438 to Sebastian et al., filed Jun. 28, 2012, which is incorporated herein by reference in its entirety. Further, U.S. patent application Ser. No. 13/602,871 to Collett et al., filed Sep. 4, 2012, discloses an electronic smoking article including a microheater, and which is incorporated herein by reference in its entirety.

[0041] Reference also is made to U.S. Pat. Pub. No. 2013/0213419 to Tucker et al., which discloses a ribbon of electrically resistive mesh material that may be wound around a wick, and to U.S. Pat. Pub. No. 2013/0192619 to Tucker et al., which discloses a heater coil about a wick wherein the coil windings have substantially uniform spacing between each winding. In certain embodiments according to the present disclosure, a heater may comprise a metal wire, which may be wound with a varying pitch around a liquid transport element,

such as a wick. An exemplary variable pitch heater that may be used according to the present disclosure is described in U.S. patent application Ser. No. 13/827,994 to DePiano et al., filed Mar. 14, 2013, the disclosure of which is incorporated herein by reference in its entirety.

[0042] Reference also is made to a liquid supply reservoir formed of an elastomeric material and adapted to be manually compressed so as to pump liquid material therefrom, as disclosed in U.S. Pat. Pub. No. 2013/0213418 to Tucker et al. In certain embodiments according to the present disclosure, a reservoir may particularly be formed of a fibrous material, such as a fibrous mat or tube that may absorb or adsorb a liquid material.

[0043] In another embodiment substantially the entirety of the cartridge may be formed from one or more carbon materials, which may provide advantages in terms of biodegradability and absence of wires. In this regard, the heating element may comprise a carbon foam, the reservoir may comprise carbonized fabric, and graphite may be employed to form an electrical connection with the battery and controller. Such carbon cartridge may be combined with one or more elements as described herein for providing illumination of the cartridge in some embodiments. An example embodiment of a carbon-based cartridge is provided in U.S. Pat. Pub. No. 2013/0255702 to Griffith Jr. et al., which is incorporated herein by reference in its entirety.

[0044] In use, when a user draws on the article **100**, the heating element **134** is activated (e.g., such as via a flow sensor), and the components for the aerosol precursor composition are vaporized in the aerosolization zone **146**. Drawing upon the mouthend **130** of the article **100** causes ambient air to enter the air intake **118** and pass through the central opening in the coupler **120** and the central opening in the plug **140**. In the cartridge **104**, the drawn air passes through an air passage **148** in an air passage tube **150** and combines with the formed vapor in the aerosolization zone **146** to form an aerosol. The aerosol is whisked away from the aerosolization zone **146**, passes through an air passage **152** in an air passage tube **154**, and out the mouth opening **128** in the mouthend **130** of the article **100**.

[0045] The various components of an aerosol delivery device according to the present disclosure can be chosen from components described in the art and commercially available. Examples of batteries that can be used according to the disclosure are described in U.S. Pat. App. Pub. No. 2010/0028766 to Peckerar et al., the disclosure of which is incorporated herein by reference in its entirety.

[0046] An exemplary mechanism that can provide puff-actuation capability includes a Model 163PC01D36 silicon sensor, manufactured by the MicroSwitch division of Honeywell, Inc., Freeport, Ill. Further examples of demand-operated electrical switches that may be employed in a heating circuit according to the present disclosure are described in U.S. Pat. No. 4,735,217 to Gerth et al., which is incorporated herein by reference in its entirety. Further description of current regulating circuits and other control components, including microcontrollers that can be useful in the present aerosol delivery device, are provided in U.S. Pat. Nos. 4,922,901, 4,947,874, and 4,947,875, all to Brooks et al., U.S. Pat. No. 5,372,148 to McCafferty et al., U.S. Pat. No. 6,040,560 to Fleischhauer et al., and U.S. Pat. No. 7,040,314 to Nguyen et al., all of which are incorporated herein by reference in their entireties.

[0047] Reference also is made to International Publications WO 2013/098396 to Talon, WO 2013/098397 to Talon, and WO 2013/098398 to Talon, which describe controllers configured to control power supplied to a heater element from a power source as a means to monitor a status of the device, such as heater temperature, air flow past a heater, and presence of an aerosol forming material near a heater. In particular embodiments, the present disclosure provides a variety of control systems adapted to monitor status indicators, such as through communication of a microcontroller in a control body and a microcontroller or other electronic component in a cartridge component.

[0048] The aerosol precursor, which may also be referred to as an aerosol precursor composition or a vapor precursor composition, can comprise one or more different components. For example, the aerosol precursor can include a polyhydric alcohol (e.g., glycerin, propylene glycol, or a mixture thereof). Representative types of further aerosol precursor compositions are set forth in U.S. Pat. No. 4,793,365 to Sensabaugh, Jr. et al.; U.S. Pat. No. 5,101,839 to Jakob et al.; WO 98/57556 to Biggs et al.; and Chemical and Biological Studies on New Cigarette Prototypes that Heat Instead of Burn Tobacco, R. J. Reynolds Tobacco Company Monograph (1988); the disclosures of which are incorporated herein by reference.

[0049] Still further components can be utilized in the aerosol delivery device of the present disclosure. For example, U.S. Pat. No. 5,154,192 to Sprinkel et al. discloses indicators that may be used with smoking articles; U.S. Pat. No. 5,261,424 to Sprinkel, Jr. discloses piezoelectric sensors that can be associated with the mouth-end of a device to detect user lip activity associated with taking a draw and then trigger heating; U.S. Pat. No. 5,372,148 to McCafferty et al. discloses a puff sensor for controlling energy flow into a heating load array in response to pressure drop through a mouthpiece; U.S. Pat. No. 5,967,148 to Harris et al. discloses receptacles in a smoking device that include an identifier that detects a non-uniformity in infrared transmissivity of an inserted component and a controller that executes a detection routine as the component is inserted into the receptacle; U.S. Pat. No. 6,040,560 to Fleischhauer et al. describes a defined executable power cycle with multiple differential phases; U.S. Pat. No. 5,934,289 to Watkins et al. discloses photonic-optronic components; U.S. Pat. No. 5,954,979 to Counts et al. discloses means for altering draw resistance through a smoking device; U.S. Pat. No. 6,803,545 to Blake et al. discloses specific battery configurations for use in smoking devices; U.S. Pat. No. 7,293,565 to Griffen et al. discloses various charging systems for use with smoking devices; U.S. Pat. No. 8,402,976 to Fernando et al. discloses computer interfacing means for smoking devices to facilitate charging and allow computer control of the device; U.S. Pat. App. Pub. No. 2010/0163063 by Fernando et al. discloses identification systems for smoking devices; and WO 2010/003480 by Flick discloses a fluid flow sensing system indicative of a puff in an aerosol generating system; all of the foregoing disclosures being incorporated herein by reference in their entireties. Further examples of components related to electronic aerosol delivery articles and disclosing materials or components that may be used in the present article include U.S. Pat. No. 4,735,217 to Gerth et al.; U.S. Pat. No. 5,249,586 to Morgan et al.; U.S. Pat. No. 5,388,574 to Ingebrethsen; U.S. Pat. No. 5,666,977 to Higgins et al.; U.S. Pat. No. 6,053,176 to Adams et al.; U.S. Pat. No. 6,164,287 to White; U.S. Pat. No. 6,196,218 to Voges;

U.S. Pat. No. 6,810,883 to Fetter et al.; U.S. Pat. No. 6,854,461 to Nichols; U.S. Pat. No. 7,832,410 to Hon; U.S. Pat. No. 7,513,253 to Kobayashi; U.S. Pat. No. 7,896,006 to Hamano; U.S. Pat. No. 6,772,756 to Shayan; U.S. Pat. No. 8,156,944 to Hon; U.S. Pat. No. 8,365,742 to Hon; U.S. Pat. No. 8,375,957 to Hon; U.S. Pat. No. 8,393,331 to Hon; U.S. Pat. App. Pub. Nos. 2006/0196518 and 2009/0188490 to Hon; U.S. Pat. App. Pub. No. 2009/0272379 to Thorens et al.; U.S. Pat. App. Pub. Nos. 2009/0260641 and 2009/0260642 to Monsees et al.; U.S. Pat. App. Pub. Nos. 2008/0149118 and 2010/0024834 to Oglesby et al.; U.S. Pat. App. Pub. No. 2010/0307518 to Wang; WO 2010/091593 to Hon; WO 2013/089551 to Foo; and U.S. Pat. Pub. No. 2013/0037041 to Worm et al., each of which is incorporated herein by reference in its entirety. A variety of the materials disclosed by the foregoing documents may be incorporated into the present devices in various embodiments, and all of the foregoing disclosures are incorporated herein by reference in their entireties.

[0050] The foregoing description of use of the article can be applied to the various embodiments described herein through minor modifications, which can be apparent to the person of skill in the art in light of the further disclosure provided herein. The above description of use, however, is not intended to limit the use of the article but is provided to comply with all necessary requirements of disclosure of the present disclosure.

[0051] In various embodiments according to the present disclosure, an electronic smoking article, particularly a cartridge thereof, may include a reservoir housing, which can be used in addition to, or in the absence of, a porous medium. For example, a porous medium, such as the fibrous mat material, may be present inside the reservoir housing. Alternatively, the reservoir housing may form the reservoir in the absence of any porous medium inside the reservoir housing. Electronic smoking articles incorporating reservoir housings are particularly described in U.S. patent application Ser. No. 14/087,594 to Chang et al., filed Nov. 22, 2013, the disclosure of which is incorporated herein by reference in its entirety.

[0052] Any of the elements shown in the article illustrated in FIG. **1** or as otherwise described above may be included in a smoking article according to the present disclosure. In particular, any of the above described and illustrated components of a control body can be incorporated into a control body according to the present disclosure

[0053] An exemplary embodiment of a smoking article **200** according to the present disclosure is shown in FIG. **2**. As illustrated therein, a control body **202** can be formed of a control body shell **201** that can include a control component **206**, a flow sensor **208**, a battery **210**, and an LED **212**. A cartridge **204** can be formed of a cartridge shell **203** enclosing the reservoir housing **244** that is in fluid communication with a liquid transport element **236** adapted to wick or otherwise transport an aerosol precursor composition stored in the reservoir housing to a heater **234**. An opening **228** may be present in the cartridge shell **203** to allow for egress of formed aerosol from the cartridge **204**. Such components are representative of the components that may be present in a cartridge and are not intended to limit the scope of cartridge components that are encompassed by the present disclosure.

[0054] Although the control component **206** and the flow sensor **208** are illustrated separately, it is understood that the control component and the flow sensor may be combined as an electronic circuit board with the air flow sensor attached directly thereto. Further, the electronic circuit board may be positioned horizontally relative the illustration of FIG. **2** in that the electronic circuit board can be lengthwise parallel to the central axis of the control body.

[0055] The cartridge **204** also may include one or more electronic components **250**, which may include an IC, a memory component, a sensor, or the like. The electronic component **250** may be adapted to communicate with the control component **206**.

[0056] The control body **202** and the cartridge **204** may include components adapted to facilitate a fluid engagement therebetween. As illustrated in FIG. **2**, the control body **202** can include a coupler **224** having a cavity **225** therein. The cartridge **204** can include a base **240** adapted to engage the coupler **224** and can include a projection **241** adapted to fit within the cavity **225**. Such engagement can facilitate a stable connection between the control body **202** and the cartridge **204** as well as establish an electrical connection between the battery **210** and control component **206** in the control body and the heater **234** in the cartridge. Further, the control body shell **201** can include an air intake **218**, which may be a notch in the shell where it connects to the coupler **224** that allows for passage of ambient air around the coupler and into the shell where it then passes through the cavity **225** of the coupler and into the cartridge through the projection **241**.

[0057] A coupler and a base useful according to the present disclosure are described in U.S. patent application Ser. No. 13/840,264 to Novak et al., filed Mar. 15, 2013, the disclosure of which is incorporated herein by reference in its entirety. For example, a coupler as seen in FIG. **2** may define an outer periphery **226** configured to mate with an inner periphery **242** of the base **240**. In one embodiment the inner periphery of the base may define a radius that is substantially equal to, or slightly greater than, a radius of the outer periphery of the coupler. Further, the coupler **224** may define one or more protrusions **229** at the outer periphery **226** configured to engage one or more recesses **278** defined at the inner periphery of the base. However, various other embodiments of structures, shapes, and components may be employed to couple the base to the coupler. In some embodiments the connection between the base **240** of the cartridge **204** and the coupler **224** of the control body **202** may be substantially permanent, whereas in other embodiments the connection therebetween may be releasable such that, for example, the control body may be reused with one or more additional cartridges that may be disposable and/or refillable.

[0058] The coupler may further comprise a plurality of electrical contacts configured to contact terminals associated with the base projection. The electrical contacts may be positioned at differing radial distances in the cavity **225** of the coupler **224** and positioned at differing depths within the coupler. The depth and radius of each of the electrical contacts is configured such that the end of the terminals come into contact therewith when the base and the coupler are joined together to establish an electrical connection therebetween. For example, a first electrical contact can define the smallest diameter, a third electrical contact can define the greatest diameter, and a second electrical contact can define a diameter therebetween. Further, the electrical contacts can be located at differing depths within the connector relative to a connector end thereof. For example, a first electrical contact can be located at a greatest depth, a third electrical contract can be located at a smallest depth, and a second electrical contact can be located at a depth therebetween. The electrical

contacts may comprise circular metal bands of varying radii positioned at differing depths within the coupler. See, for example, the electrical contacts illustrated in FIG. **4**.

[0059] In particular embodiments according to the present disclosure, the coupler utilized with the shell of the control body may be configured to provide for additional or improved functionalities, particularly in relation to communications between the coupler and a control component within the control body. This can arise from a desired configuration of an electronic circuit board within the shell in relation to the coupler. For example, referring to FIG. **3**, a control body **302** useful with an electronic smoking article can comprise a shell **301** with an interior **303**, a proximal end **322**, and an opposing distal end **314**. The control body **302** further includes a coupler **324** having a body end **324***a* in engagement with the proximal end **322** of the shell **302** and an opposing connector end **324***b* configured to releasably engage a cartridge. An end cap **311** is shown engaging the distal end **314** of the shell **302**. The control body **302** also includes a battery **310** and an electronic circuit board **306** positioned within the interior **303** of the shell **301** between the battery **310** and the coupler **324**. The electronic circuit board can include a control circuit, memory, microprocessors, and/or the like. As illustrated in FIG. **3**, the shell **301** has a central axis extending along the length of the shell **301**. In some embodiments, the electronic circuit board **306** can be oriented as illustrated in FIG. **3** to be substantially parallel to the central axis of the shell **301**. In other words, the electronic circuit board can have a thickness and a length such that the length is greater than the thickness, and the electronic circuit board can be positioned lengthwise within the shell to be substantially parallel to the central axis of the shell. An electronic circuit board can be considered to be substantially parallel to the central axis of the shell when the alignment deviates from parallel by less than 45 degrees, less than 30 degrees, or less than 15 degrees. In such alignment, the functional surface(s) of the electronic circuit board to which working components may be attached face the shell wall, and thus the functional surface(s) of the electronic circuit board is substantially perpendicular to the central axis of the shell. In embodiments wherein an electronic circuit board is positioned substantially perpendicular to the central axis of the shell, the surface area of the electronic circuit board to which components may be attached can be limited. As illustrated in FIG. **3**, however, positioning the electronic circuit board to be substantially parallel to the central axis of the shell makes a most efficient use of space within the shell and allows for an increased surface area for the electronic circuit board for attachment of components, such as a microprocessor, LED's, and other control components.

[0060] The electronic circuit board **306** can include a pressure sensor **308** attached directly thereto. A direct attachment in this sense is intended to mean a connection whereby the pressure sensor can be electrically connected to the electronic circuit board via integrated components (e.g., pins) as opposed to a wired connection. Previous devices incorporating a pressure sensor and an electronic circuit typically have the pressure sensor spaced a significant distance from the electronic circuit board, and the electrical connection therebetween is formed using wires attached to the pressure sensor and the electronic circuit board. In the present configurations, the need for a wired connection between an electronic circuit board and a pressure sensor can be eliminated. This can reduce expense associated with hand soldering of wired connections and improve reliability associated with the assembly process. In some embodiments, a direct connection can encompass the use of an intermediate attachment element or spacer (e.g., a spacer attached directly to the electronic circuit board and a pressure sensor attached directly to the spacer). The direct attachment can mean that the electrical contacts or pins of the pressure sensor are in direct contact with the electronic circuit board although the body of the pressure sensor may be spaced apart from the electronic circuit board. A substantially direct attachment between the pressure sensor and the electronic circuit board can encompass any attachment whereby the body of the pressure sensor is spaced apart from the electronic circuit board by less than 50% of the diameter of the shell **301**, less than 25% of the diameter of the shell, less than 10% of the diameter of the shell, or less than 5% of the diameter of the shell. For example, the spacing can 5 mm or less, 2 mm or less, or 1 mm or less. As illustrated, the pressure sensor **308** has a central axis extending between a first, free end and a second end attached to the electronic circuit board **306** (**308***a* and **308***b*, as illustrated in FIG. **5**). This central axis of the pressure sensor **308** is substantially perpendicular to the central axis of the shell **301**.

[0061] The positioning of the electronic circuit board is more clearly seen in the partial section shown in FIG. **4**. As seen therein, the electronic circuit board **306** is positioned within the shell **301** between the battery **310** and the coupler **324** such that the lengthwise axis of the electronic circuit board is substantially parallel to the central axis of the shell. As such, the electronic circuit board **306** has a first end **306***a* that is adjacent the coupler **324** and a second end **306***b* that is adjacent the battery **310**. The electronic circuit board may be at least partially within the coupler. As such, the electronic circuit board may be attached (e.g., interference fit, glued, or otherwise affixed) to the coupler. Alternatively, the electronic circuit board may be interconnected with the coupler through an intermediate attachment, such as the extension **361***a* of the first electrical contact **361** (as more fully discussed below).

[0062] In the embodiment illustrated, the first end **306***a* of the electronic circuit board **306** is located within the coupler **324**, and this can provide various advantages as is evident from the further disclosure herein. For example, such location can facilitate ease of connection between the electronic circuit board and the electrical contacts in the coupler. As seen in FIG. **4**, a first electrical contact **361**, a second electrical contact **362**, and a third electrical contact **363** are provided as bands encircling the central opening **325** (or cavity) in the connector end **324***b* of the coupler **324**. Visible in FIG. **4** is an extension **361***a* of the first electrical contact **361** extending between the contact and the electronic circuit board **306** and passing through the coupler **324**. A second electrical contact extension and a third electrical contact extension also are present but not visible in the illustration.

[0063] The orientation of the electronic circuit board also is beneficial in that the interior **303** of the shell **301** can be partitioned into different spaces or sections that can experience different pressures. For example, the shell interior can include a normal pressure space and a pressure reduction space. The normal pressure space can be maintained at ambient pressure and experience no significant change in pressure related to use of the control body in an electronic smoking article. Normal pressure can be maintained with an opening in the shell **301** to the surrounding atmosphere. For example, the end cap **311** can be arranged to allow communication between the normal pressure space of the shell and the sur-

NJOY Exhibit 1004.018

rounding atmosphere. Such pressure communication between the normal pressure space and the surrounding atmosphere can be facilitated with an opening located elsewhere on the shell **301** and/or around the connection of the coupler **324** with the shell. The pressure reduction space can be isolated from the normal pressure space, and the pressure within the pressure reduction space can be reduced below the pressure in the normal pressure space during use of the article (i.e., during draw on the article).

[0064] In the embodiment illustrated in FIG. **5**, a first end **308***a* of the pressure sensor **308** can be positioned to be in fluid communication with the pressure reduction space **383**, and a second end **308***b* of the pressure sensor can be positioned to be in fluid communication with the normal pressure space **373**. In some embodiments, the pressure reduction space can be defined by a sealing member **380**. For example, the sealing member can comprise a silicone rubber or like material. In some embodiments, the sealing member may be a cup seal. The sealing member **380** can substantially surround the perimeter of the pressure sensor **308** and be in a sealing contact therewith. As illustrated, the pressure sensor **308** is directly attached to the electronic circuit board **306**, but the sealing member **380** does not extend completely down the length of the pressure sensor and thus does not form a sealing contact with the electronic circuit board. As such, the second end **308***b* of the pressure sensor **308** and the electronic circuit board **306** are positioned within the normal pressure space **373**.

[0065] This configuration is further seen in the cross-section of FIG. **6**A where the pressure sensor **308** is directly attached to the electronic circuit board **306**. The sealing member **380** surrounds the top and perimeter of the pressure sensor **308** but does not contact the electronic circuit board **306**. The gap "Y" between the sealing member **380** and the electronic circuit board **306** maintains the second end **308***b* of the pressure sensor **308** within the normal pressure space **373** while the first end **308***a* of the pressure sensor is within the pressure reduction space **383**. To ensure that the second end **308***b* of the pressure sensor **308** is maintained at ambient pressure, the direct connection of the pressure sensor to the electronic circuit board **306** can encompass a spacing factor, as otherwise discussed herein. As such, the second end **308***b* of the pressure sensor **308** may be prevented from forming an air tight seal with the electronic circuit board **306**. Alternatively or in combination, an aperture **307** may be formed in the electronic circuit board **306** adjacent the second end **308***b* of the pressure sensor **306** to provide pressure communication between the second end of the pressure sensor and the normal pressure space **373**.

[0066] The coupler **324** also can include a pressure channel **385** that opens into the pressure reduction space **383**. As illustrated in the embodiment of FIG. **5**, the body end **324***a* of the coupler **324** includes a wall **324***c* that can include one or more openings or channels therethrough. For example, the coupler wall **324***c* can include the pressure channel **385** and apertures that accommodate passage of the electrical contact extensions. The body end **342***a* of the coupler **324** thus can be described has having a wall **324***c* through which the pressure channel **385** can extend.

[0067] The connector end **324***b* of the coupler **324** has a cavity **325**. The cavity **325** can be sized and shaped to receive a projection formed in the base of the cartridge (see FIG. **2**). More particularly, the pressure channel can extend between a first end **385***a* that is in fluid communication with the cavity **325** and a second end **385***b* that opens through the wall **324***c* at the body end **324***a* of the coupler **324** to be in fluid communication with the pressure reduction space **383**. The pressure channel can be integrally formed in the coupler, although other means of providing the channel also are encompassed. For example, a separate tube can be inserted through the coupler, or an aperture may be created in the coupler body.

[0068] As seen in FIG. **5**, the second end **385***b* of the pressure channel **385** can project into the interior of the shell **301**, and the sealing member **380** can substantially surround the perimeter of the second end of the pressure channel. If desired, the second end **385***b* of the pressure channel **385** may be flush with the wall **324***c* at the body end **324***a* of the coupler **324**, and a sealing engagement may be made between the sealing member **380** and the wall at the body end of the coupler around the second end of the pressure channel. Preferably, the sealing member **380** is configured to form an air tight seal around the first end **308***a* of the pressure sensor **308** and the second end **385***b* of the pressure channel **385**. As such, the pressure reduction space can encompass the opening at the second end **385***b* of the pressure channel and the first end **308***a* of the pressure sensor **308**. In some embodiments, the sealing member **380** can be in physical contact with an inner surface of the shell **301**.

[0069] In some embodiments, the coupler **324** can include an air inlet channel **388** that can be adapted to distribute drawn, ambient air through an electronic smoking article including the coupler. The air inlet channel **388** particularly can be in fluid communication with the cavity **325**. Drawn, ambient air can enter the air inlet channel **388** through an air inlet aperture **389** that opens through the outer surface of the coupler.

[0070] The configuration of the air inlet channel **388** is further illustrated in the cross-section of FIG. **6**B where the air inlet channel extends across the diameter of the coupler **324** between a first air inlet aperture **389***a* and a second air inlet aperture **389***b*. The air inlet apertures open through the exterior surface of the coupler and provide an entry for ambient air to be drawn into the coupler to be distributed to other portions of an electronic smoking article utilizing the coupler. In other embodiments, the air inlet channel may extend only across a portion of the coupler, may be branched, may open to only a single air inlet aperture, or may open to more than two air inlet apertures. In certain embodiments, the air inlet channel can be formed entirely within the coupler body.

[0071] In FIG. **6**B, the pressure sensor **308** can be seen through the pressure channel **385**. Also visible through the pressure channel **385** is the interior surface of the sealing member **380** that defines the pressure reduction space **383** at the first end **308***a* of the pressure sensor **308**. The cross-section of FIG. **6**B further illustrates three openings (**386***a*, **386***b*, and **386***c*) through which the electrical contact extensions may pass.

[0072] As seen in FIG. **5**, the first end **385***a* of the pressure channel **385** extends beyond the air inlet channel **388** toward the connector end **324***b* of the coupler **324**. In other words, the first end **385***a* of the pressure channel **385** is positioned closer to the connector end **324***b* of the coupler **324** than the air inlet channel **388**. This configuration can be useful to prevent backflow of liquids or vapors into the control body. The first end **385***a* of the pressure channel **385** also can have a diameter that is smaller than the diameter of the second end **385***b* of the

pressure channel. Similarly, the pressure channel **385** may increase in diameter from the first end **385***a* to the second end **385***b* thereof.

[0073] In light of the above-described configuration, the coupler **324** may define an ambient air flow pathway therethrough. In some embodiments, the ambient air flow pathway can extend from the exterior of the coupler **324** (e.g., through one or more air inlet apertures **389**), through the air inlet channel **388** in the coupler body **324**, and through the cavity **325**. The air flow pathway further can extend into a cartridge that is attached to the coupler (such as through a cartridge base, as shown in FIG. **2**) and out of the cartridge, such as through an opening in an opposing end thereof (see element **228** in FIG. **2**).

[0074] The spatial relationship of the air inlet channel and the first end of the pressure channel is further illustrated in FIG. **7**. As seen therein, a control body **702** is engaged with a cartridge **704** via a coupler **724** on the control body and a base **740** on the cartridge. The coupler **724** includes a cavity **725** that receives a projection **741** on the base **740**. As illustrated, the cavity **725** and the projection **741** each have a stepped configuration such that rings of successively smaller diameter are present in the cavity, and corresponding projection segments of successively smaller diameter are present on the base. The projection **741** includes an air flow entry **741***a* that seats in the cavity **725** of the coupler **724** proximate the air inlet channel **788**. The coupler **724** further includes a pressure channel **785** having a first end **785***a* opening within the cavity **725** of the coupler and a second end **785***b* opening within the control body **702**, particularly within the pressure reduction space **783**. The first end **785***a* of the pressure channel **785** is spatially arranged relative to the air inlet channel **788** to be separated along the longitudinal axis of the coupler **724** (and thus also the shell **701** of the control body **702**). The longitudinal separation can be at least about 1 mm, at least about 2 mm, or at least about 3 mm.

[0075] When the cartridge **704** engages the control body **702**, air draw on the mouthend of the cartridge (see element **130** in FIG. **1**) causes air to enter the air inlet channel **788** of the coupler **724** through one or more air inlet apertures **789** and flow into the air flow entry **741***a* of the projection **741** from which the drawn air passes through the interior of the base **740** and into the cartridge **704**. Air flow through the device thus can proceed from the air inlet channel **788** downstream toward the mouthend of the cartridge **704**. The longitudinal separation of the first end **785***a* of the pressure channel **785** and the air inlet channel **788** is such that the first end of the air inlet channel is downstream from the air inlet channel. In other words, the first end **785***a* of the pressure channel **785** and the air inlet channel **788** are spatially arranged and separated such that the first end of the pressure channel is relatively nearer to the connector end **324***b* of the coupler. Likewise, when the projection **741** of the base **740** engages the cavity **725** of the coupler **724**, the air flow entry **741** seats upstream in the cavity from the first end **785***a* of the pressure channel **785**. As such, the distance between the air flow entry **741** and the first end **785***a* of the pressure channel **785** when the projection **740** engages the cavity **725** can be at least about 1 mm, at least about 2 mm, or at least about 3 mm.

[0076] When draw on the device causing air to enter the air inlet channel **788** through the air inlet aperture **789** causes a pressure drop, such pressure drop is communicated to the cavity **725**. The matched configuration of the cavity **725** and the projection **741** preferably does not substantially form an air tight connection therebetween. Thus, the pressure drop in the cavity **725** is likewise communicated to the pressure channel **785** from the first end **785***a* to the second end **785***b* and thus the pressure reduction space **783**. Because of the spatial arrangement of the air inlet channel **788** and the first end **785***a* of the pressure channel **785**, however, the air flow entry **741** of the seated projection **740** is sufficiently spaced apart from the first end of the pressure channel to prevent or reduce incidence of passage of liquid from the cartridge **704** through the base **740** and into the control body **702**.

[0077] In use, an individual may draw on the mouthend of a cartridge (which may include a mouthpiece), and air flow may be established along an air flow pathway, such as described above. Drawn air enters the air inlet channel through the air inlet aperture. The air inlet channel can present a restriction to the flow of air so that the pressure on the interior of the coupler is lower than ambient pressure (and thus lower than the normal pressure space within the control body shell). This reduced pressure is transmitted to the pressure sensor in the control body shell by the pressure channel formed in the coupler. In this manner, a pressure differential can be created across the pressure sensor between the first end of the pressure sensor in the pressure reduction space and the second end of the pressure sensor in the normal pressure space within the shell. More particularly, the control circuit can be configured to establish electrical current flow from the electrical power source when the pressure sensor detects a reduced pressure in the pressure reduction space relative to the pressure in the normal pressure space. Such electrical current flow can energize a heater in the cartridge to vaporize the aerosol precursor composition. By utilizing the pressure channel, air entering the coupler is not required to pass through the control body shell, such as would be required in devices having an air inlet formed in the shell of the control body.

[0078] As noted above, the spatial arrangement of openings in the coupler can be beneficial in preventing passage of any aerosol precursor composition from a cartridge into the interior of the control body. When a cartridge is attached to the control body, any aerosol formed within the cartridge that is not withdrawn by the user can condense. Likewise, water vapor may condense within the cartridge and/or liquid stored in a reservoir within the cartridge may leak within the cartridge. In some instances, such liquids can pass from the cartridge through any air opening that is present to provide passage of drawn air from the control body to the cartridge. When an inlet for drawn air is present in the control body shell, the air flow passage between the air inlet and the cartridge necessarily extends through at least a portion of the control body. Any liquid passing out of the cartridge through the air flow passage thus can enter the control body where the liquid can contact the power source, pressure sensor, or control components of the device and cause damage to the control body.

[0079] According to the present disclosure, however, when a cartridge engages the control body, the air flow entry on the projection of the cartridge's base is seated upstream from the first end of the pressure channel. Thus, any liquid passing through the air flow entry in the cartridge's base projection would only enter the air inlet channel in the coupler where it can pass out of the coupler through the air inlet aperture or simply flow back into the cartridge.

[0080] Referencing FIG. **4**, the electronic circuit board **306** can include a variety of elements in addition to the pressure

NJOY Exhibit 1004.020

sensor **308**. As illustrated, the electronic circuit board **306** further includes a first light emitting diode (LED) **312***a* and a second LED **312***b*. A microprocessor, memory, and the like also may be present on the electronic circuit board. The electronic circuit board may include any elements suitable for establishing a control circuit suitable for controlling one or more functions of an electronic smoking article or the like.

[0081] In some embodiments, one or more LEDs on the electronic circuit board may be adapted to emit light that is visible exterior to the control body. For example, at least a portion of the control body shell and/or the coupler can be translucent or otherwise light transmissive. The embodiment of a control body **802** illustrated in FIG. **8** comprises an electronic circuit board **806** positioned within a shell **801** between a battery **810** and a coupler **824**. The electronic circuit board **806** is configured lengthwise such that it is substantially parallel with a central axis of the shell **801**. The electronic circuit board **806** comprises a first LED **812***a* and a second LED **812***b*. Further, in the illustrated embodiment, the coupler **824** is light transmissive such that light from the first LED **812***a* and/or light from the second LED **812***b* is visible external to the control body through the coupler. The coupler may be formed, for example, from a translucent thermoplastic material. The control body **802** further can include an input element, such as a pushbutton **861**, which can be adapted to activate power delivery from the power source in the control body to a heater, such as in an attached cartridge (see FIG. **2**). The input element alternatively can be adapted to active a further control function of the device, such as described in greater detail below.

[0082] As seen in FIG. **9**, when the control body **902** is attached to a cartridge **904**, the coupler **924** forms a visible ring around the smoking article **900**. When an LED on the electronic circuit board is activated, light is emitted through the coupler ring, as shown by the arrows in FIG. **9**. The light emitted can be decorative in nature. In some embodiments, the control circuit can be configured to cause at least one LED to emit a defined lighting signal that corresponds to a status of the electronic smoking article.

[0083] The lighting signal can be defined by a color, a series of different colors, a blinking light of a single color or a series of different colors, or by a specified number of blinks of a light of a single color or a series of different colors. The status of the electronic smoking article can include any status associated with an electronic smoking article including, but not limited to battery power status, volume of aerosol precursor composition remaining in a cartridge, number of puffs remaining for a cartridge, a working status, an error code, heater activation, or the like. The control circuit may be configured to automatically activate the lighting signal upon detecting a defined input. For example, when a battery is depleted to half power, a power depletion input may be received by the control circuit, and the control circuit may cause an LED to emit a defined lighting signal to alert the user of the battery status. As a further, non-limiting example, a defined lighting signal may be automatically activated every time a user draws on the device and activates the heater. The control element may include programming for activating any number of lighting signals automatically in response to an input. The input may be an electronic signal that is automatically generated in response to programming of the control circuit.

[0084] In some embodiments, the control body can include an input element. The input element, may be an element adapted for manual activation by a user. A pushbutton **961** as illustrated in FIG. **9** is an example of a manual input element. In other embodiments, a manual input element may be a resistive sensing device or a capacitive sensing device including, but not limited to, a touchscreen. A manual input element can provide an input or a plurality of inputs to the control circuit, which in turn transmits an input to an LED. The manual input may be adapted to provide one input or a plurality of different inputs to generate a lighting signal indicative of a status of the electronic smoking article. As a non-limiting example, a single push of a button or tap on a touchscreen may generate a lighting signal providing a battery status, and two rapid pushes of the button or taps on the touchscreen in succession may generate a lighting signal indicating the number of puffs remaining for a cartridge attached to the control body. The control element may include programming for activating any number of lighting signals in response to a variety of manual inputs to indicate a number of statuses of the device.

[0085] In some embodiments, an input element (e.g., a pushbutton) can be at least partially light transmissive. As such, a lighting signal generated as discussed above may be visible through the input element as well as the coupler or instead of the coupler. For example, a lighting signal indicating one status may be visible through the input element, and a lighting signal indicating a second, different status may be visible through the coupler. If desired, an LED may also be positioned at the distal end of the control body shell (see element **212** in FIG. **2**), and such LED likewise may be adapted to emit a lighting signal.

[0086] Many modifications and other embodiments of the disclosure will come to mind to one skilled in the art to which this disclosure pertains having the benefit of the teachings presented in the foregoing descriptions and the associated drawings. Therefore, it is to be understood that the disclosure is not to be limited to the specific embodiments disclosed herein and that modifications and other embodiments are intended to be included within the scope of the appended claims. Although specific terms are employed herein, they are used in a generic and descriptive sense only and not for purposes of limitation.

1. A control body for an electronic smoking article, the control body comprising:

an elongated shell with an interior, a proximal end, and an opposing distal end;

a coupler having a body end in engagement with the proximal end of the shell and having an opposing connector end configured to releasably engage a cartridge;

an electrical power source; and

an electronic circuit board positioned within the shell interior between the electrical power source and the coupler;

wherein the shell has a central axis therethrough from the proximal end to the distal end, and wherein the electronic circuit board is oriented substantially parallel to the central axis of the shell.

2. The control body according to claim **1**, further comprising a pressure sensor attached to the electronic circuit board.

3. The control body according to claim **2**, wherein the shell interior includes a normal pressure space and a pressure reduction space, and wherein a first end of the pressure sensor is in fluid communication with the pressure reduction space and a second end of the pressure sensor is in fluid communication with the normal pressure space.

4. The control body according to claim **3**, wherein the body end of the coupler forms a wall, the connector end of the coupler has a cavity, and the coupler includes a pressure channel extending between a first end that is in fluid communication with the cavity and a second end that opens through the wall at the body end of the coupler to be in fluid communication with the pressure reduction space.

5. The control body according to claim **4**, wherein the pressure channel is integrally formed in the coupler.

6. The control body according to claim **4**, comprising a sealing member configured to form an air tight seal around the pressure sensor and the second end of the pressure channel and thus define the pressure reduction space that encompasses the opening at the second end of the pressure channel and the first end of the pressure sensor.

7. The control body according to claim **6**, wherein the sealing member is in physical contact with an inner surface of the shell.

8. The control body according to claim **4**, wherein the coupler includes an air inlet channel in fluid communication with the cavity.

9. The control body according to claim **8**, wherein the air inlet is formed entirely within the coupler body.

10. The control body according to claim **8**, comprising an air inlet aperture in the exterior surface of the coupler in fluid communication with the air inlet.

11. The control body according to claim **8**, wherein the coupler has a longitudinal axis extending from the body end to the opposing connector end, and wherein the first end of the pressure channel is spatially separated from the air inlet channel relative to the longitudinal axis of the coupler.

12. The control body according to claim **11**, wherein the first end of the pressure channel is spatially separated from the air inlet channel so as to be relatively nearer the connector end of the coupler.

13. The control body according to claim **4**, comprising an ambient air flow pathway extending from the exterior of the coupler, through the coupler body, and through the cavity.

14. The control body according to claim **4**, wherein the electronic circuit board includes a microprocessor, and wherein the microprocessor is configured to establish electrical current flow from the electrical power source when the pressure sensor detects a reduced pressure in the pressure reduction space relative to the pressure in the normal pressure space.

15. The control body according to claim **3**, wherein the electronic circuit board is positioned entirely within the normal pressure space.

16. The control body according to claim **1**, comprising at least one light emitting diode (LED) attached to the electronic circuit board.

17. The control body according to claim **16**, wherein at least a portion of the coupler is light transmissive such that light from the LED is visible through the coupler.

18. The control body according to claim **16**, wherein the control circuit is configured to cause the at least one LED to emit a defined lighting signal that corresponds to a status of the electronic smoking article.

19. The control body according to claim **18**, comprising an input element, and wherein the control circuit is configured to cause the at least one LED to emit the defined lighting signal in response to an input from the input element.

20. The control body according to claim **19**, wherein the input element is at least partially light transmissive.

21. An electronic smoking article comprising a control body according to claim **1** and a cartridge comprising an aerosol precursor composition and a heater adapted to vaporize the aerosol precursor composition.

22. A control body for an electronic smoking article, the control body comprising:

an elongated shell with an interior, a proximal end, and an opposing distal end;

a coupler formed of an elongated body having a first end that forms a wall and that engages the proximal end of the shell and a second end that comprises a cavity configured to releasably engage a cartridge, wherein the coupler includes a pressure channel extending between a first end that is in fluid communication with the cavity and a second end that opens through the wall at the first end of the coupler, wherein the coupler includes an air inlet channel in fluid communication with the cavity and an air inlet aperture in an exterior surface of the coupler, and wherein the coupler has a longitudinal axis extending from the first end to the second end, and the first end of the pressure channel is spatially separated from the air inlet channel relative to the longitudinal axis of the coupler; and

a microprocessor.

23. The coupler according to claim **22**, wherein the first end of the pressure channel is spatially separated from the air inlet channel so as to be relatively nearer the second end of the coupler.

24. An electronic smoking article comprising a control body according to claim **22** and a cartridge comprising an aerosol precursor composition and a heater adapted to vaporize the aerosol precursor composition.

* * * * *