US008528569B1

(12) **United States Patent**
Newton

(10) **Patent No.: US 8,528,569 B1**
(45) **Date of Patent: Sep. 10, 2013**

(54) **ELECTRONIC CIGARETTE WITH LIQUID RESERVOIR**

(76) Inventor: **Kyle D. Newton**, Colleyville, TX (US)

(*) Notice: Subject to any disclaimer, the term of this patent is extended or adjusted under 35 U.S.C. 154(b) by 296 days.

(21) Appl. No.: **13/157,024**

(22) Filed: **Jun. 28, 2011**

(51) **Int. Cl.**
A24F 1/22 (2006.01)

(52) **U.S. Cl.**
USPC **131/194**; 131/270; 131/273; 128/202.21

(58) **Field of Classification Search**
USPC 131/194, 273, 328–329; 128/200.14, 128/202.21
See application file for complete search history.

(56) **References Cited**

U.S. PATENT DOCUMENTS

7,726,320	B2	6/2010	Robinson et al.
2005/0016550	A1	1/2005	Katase
2006/0196518	A1	9/2006	Hon
2007/0267031	A1	11/2007	Hon
2009/0095311	A1	4/2009	Han
2010/0031967	A1	2/2010	Inagaki
2012/0111347	A1 *	5/2012	Hon 131/329

FOREIGN PATENT DOCUMENTS

CN 201379072 Y * 1/2010

* cited by examiner

Primary Examiner — Richard Crispino
Assistant Examiner — Eric Yaary
(74) *Attorney, Agent, or Firm* — Dan Brown Law Office; Daniel R. Brown

(57) **ABSTRACT**

An electronic cigarette including an elongated housing that has a mouthpiece with an aerosol outlet, and an atomizer disposed within an atomizing chamber. The atomizer selectively generates an aerosol of the liquid in response to suction pressure at the aerosol outlet. The atomizing chamber has an air inlet, an atomizer outlet coupled to the aerosol outlet, and a first wick aperture. A liquid reservoir is disposed within the elongated housing, which is sealably separated from the atomizing chamber. A wick disposed through the first wick aperture between the liquid reservoir and the atomizing chamber and it is configured to transfer the liquid by capillarity from the liquid reservoir to the atomizer.

17 Claims, 7 Drawing Sheets

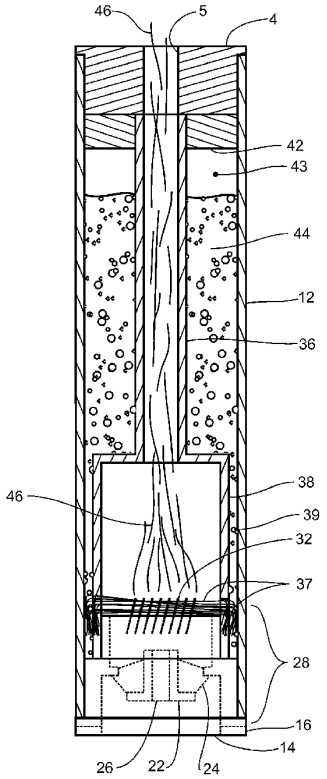

NJOY Exhibit 1007.001

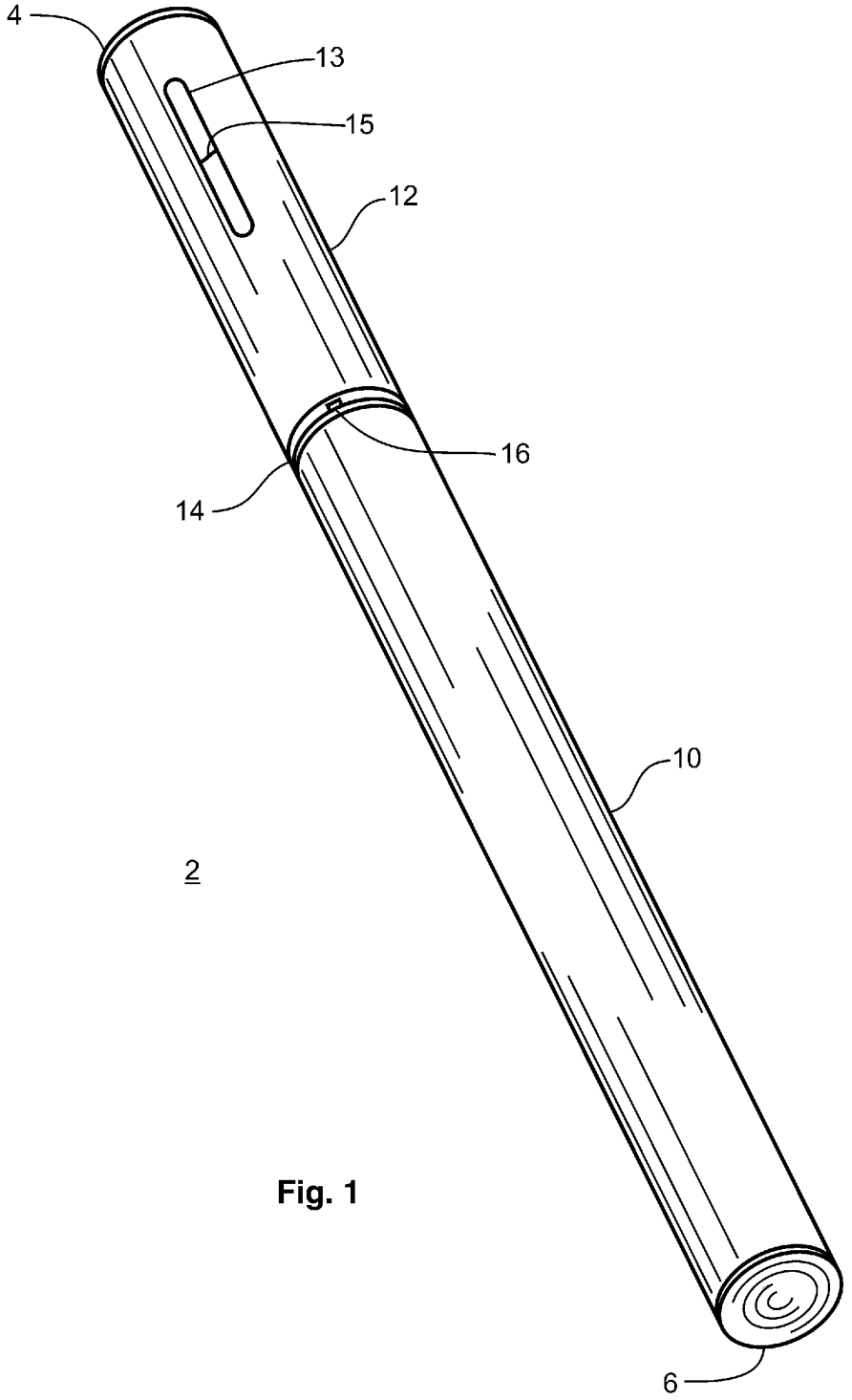

Fig. 1

Fig. 2c

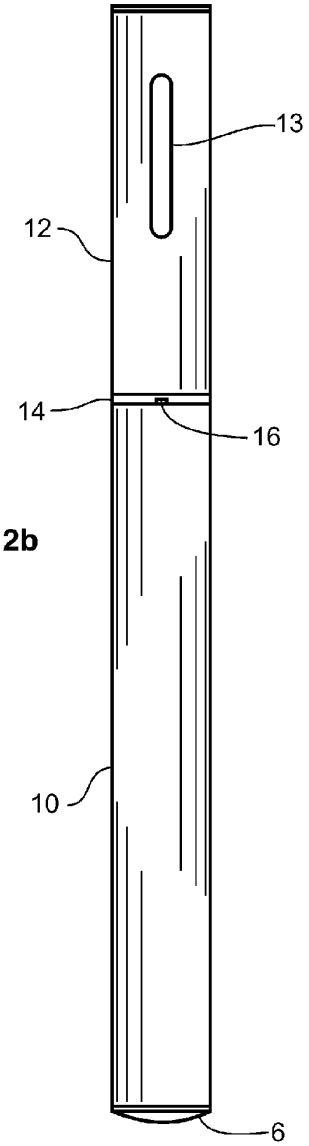

Fig. 2b

Fig. 2a

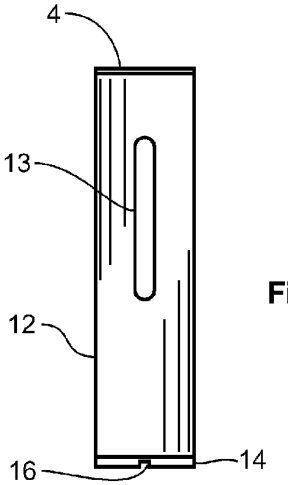

Fig. 3b

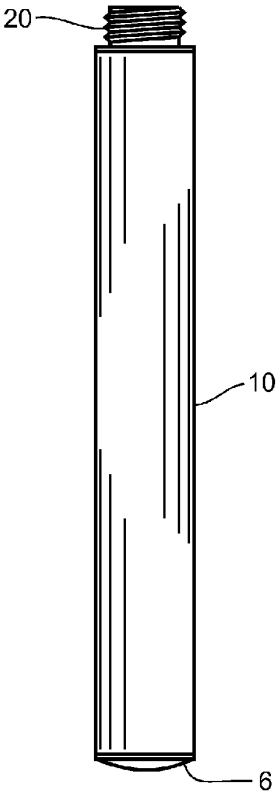

Fig. 3a

Fig. 4c

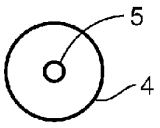

Fig. 4b

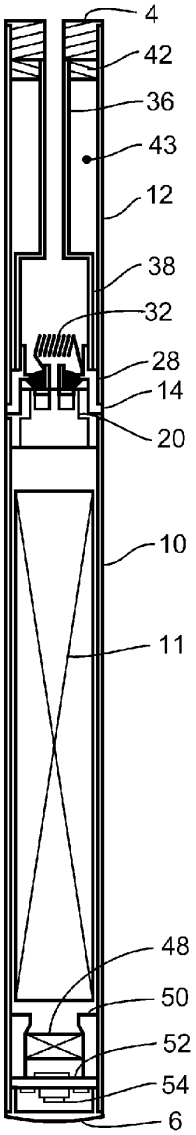

Fig. 4a

Fig. 5b

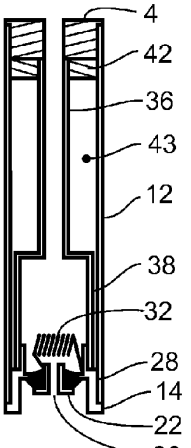

Fig. 5a

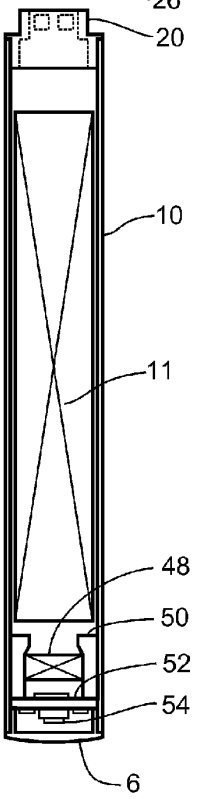

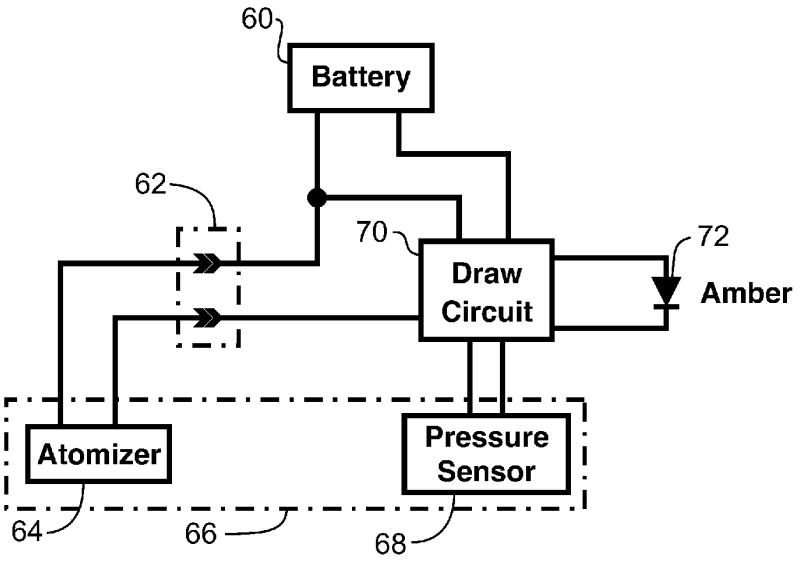
60
Battery
62
70
Draw
Circuit
72
Amber
Atomizer
Pressure
Sensor
64
66
68

Fig. 6

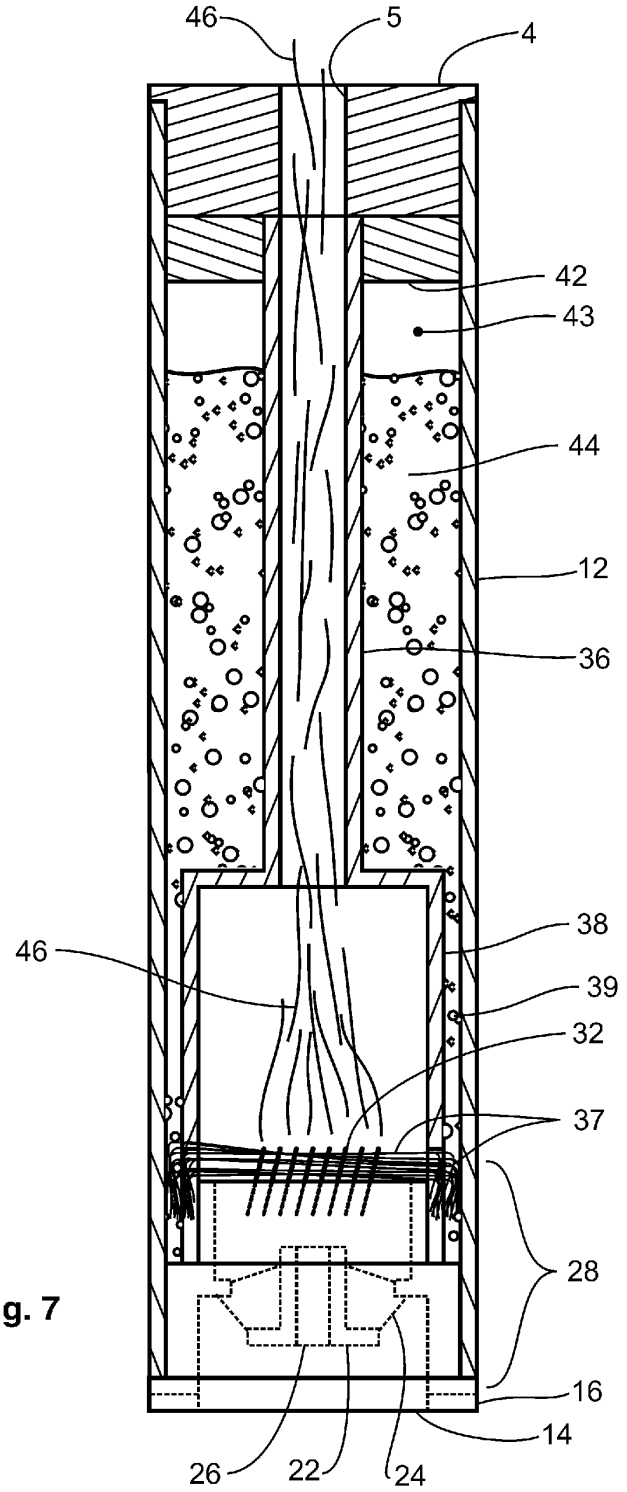

Fig. 7

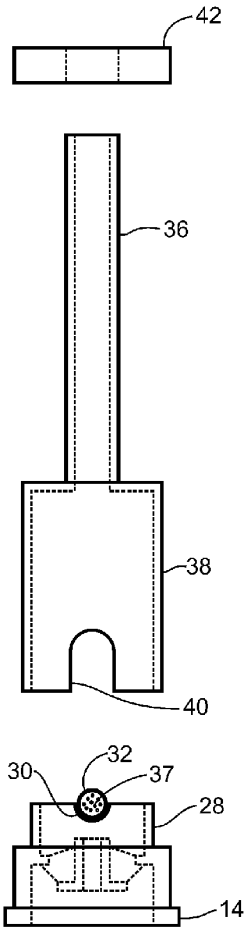

Fig. 8

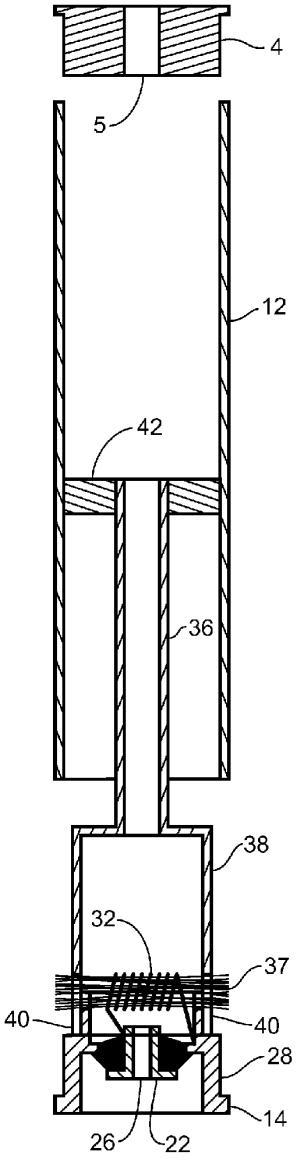

Fig. 9

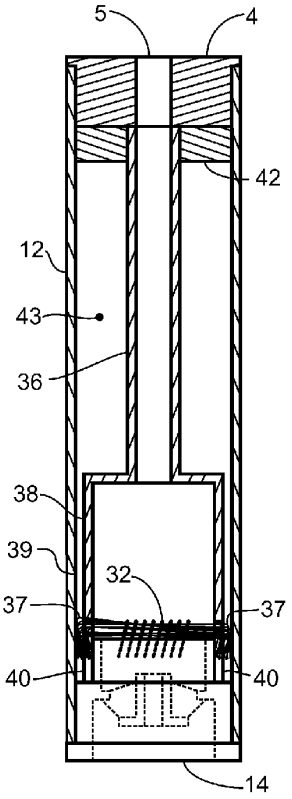

Fig. 10

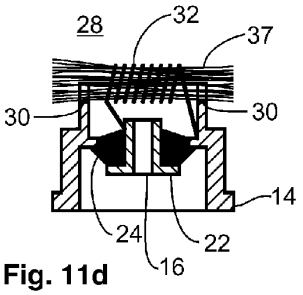

Fig. 11d

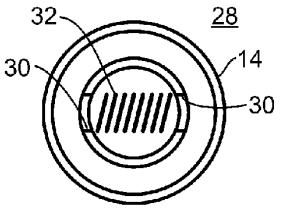

Fig. 11c

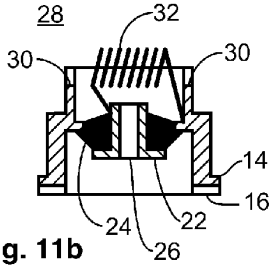

Fig. 11b

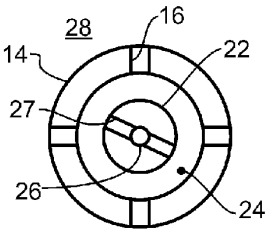

Fig. 11a

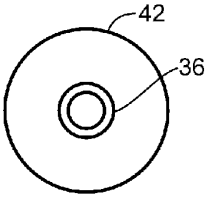

Fig. 12c

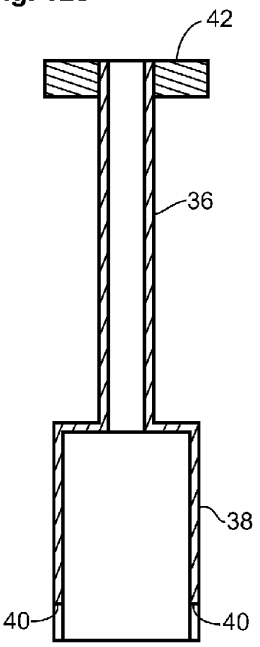

Fig. 12b

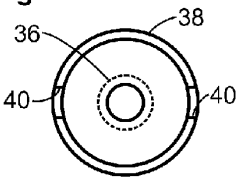

Fig. 12a

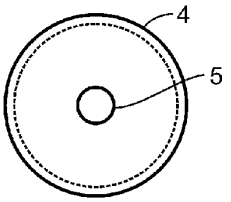

Fig. 13c

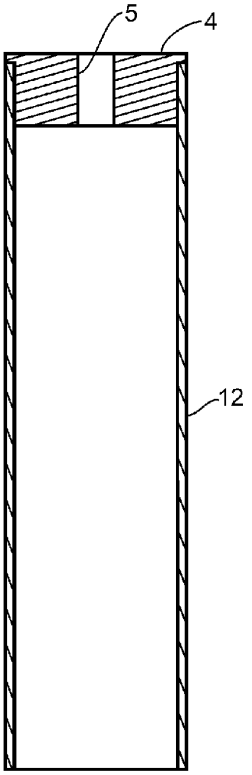

Fig. 13b

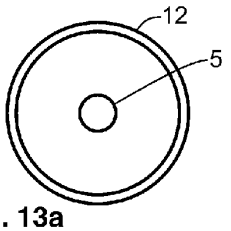

Fig. 13a

ELECTRONIC CIGARETTE WITH LIQUID RESERVOIR

BACKGROUND OF THE INVENTION

1. Field of the Invention

The present invention relates to electronic cigarettes. More specifically, the present invention relates to an electronic cigarette with an internal liquid reservoir.

2. Description of the Related Art

Electronic cigarettes have become increasingly popular in recent times. Electronic cigarettes emulate a tobacco cigarettes, but without the combustion of tobacco during use. Rather than burning tobacco, a liquid is atomized within the electronic cigarette, which emulates the smoke produced in a tobacco cigarette. The liquid may contain flavoring agents such as tobacco flavor, menthol, and others, to enhance the "smoking" experience of the electronic cigarette. Nicotine has been added to the atomization liquid in prior art electronic cigarettes. In certain prior art electronic cigarettes, a reserve of liquid is stored within the cigarette housing in a porous material, which is placed into contact with an atomizing assembly such that the liquid can be gradually transferred to the atomizing assembly during consumption. A replaceable cartridge with a liquid soaked porous material has been provided to enable consumers to replenish the supply of liquid as it is depleted during use by replacing the cartridge. It should be appreciated that the structural and electrical components in an electronic cigarette are durable and outlast, by a long measure, the period of consumption for the quantity of liquid provided in such a porous reservoir.

Consumers of electronic cigarettes are experienced at replacing the liquid reservoir cartridges as the liquid is depleted during consumption. In fact, it is common for consumers to carry spare cartridges so that they are readily available in the event their current cartridge becomes depleted. In fact, this arrangement can become somewhat tedious after a period of use, and there is a general desire on the marketplace to extend the duration of use between cartridge changes, or even the elimination of the need to ever change cartridges. Thus is can be appreciated that there is a need in the art for an apparatus for increasing the quantity of liquid stored within an electronic cigarette and other means to reduce the frequency of replacing or adding additional liquid during use.

SUMMARY OF THE INVENTION

The need in the art is addressed by the apparatus of the present invention. The present invention teaches an electronic cigarette apparatus including an elongated housing that has a mouthpiece with an aerosol outlet, and an atomizer disposed within an atomizing chamber. The atomizer selectively generates an aerosol of the liquid in response to suction pressure at the aerosol outlet. The atomizing chamber has an air inlet, an atomizer outlet coupled to the aerosol outlet, and a first wick aperture. A liquid reservoir is disposed within the elongated housing, which is sealably separated from the atomizing chamber. A wick disposed through the first wick aperture between the liquid reservoir and the atomizing chamber and it is configured to transfer the liquid by capillarity from the liquid reservoir to the atomizer.

In a specific embodiment, the foregoing apparatus further includes an inlet vent formed on the exterior of the elongated housing that is coupled to deliver air to the atomizing chamber air inlet. In a refinement to this embodiment, the inlet vent is coupled to the atomizing chamber air inlet by a conduit. In a further refinement, the conduit sealably passes through the liquid reservoir.

In a specific embodiment of the foregoing apparatus, the atomizer outlet and the aerosol outlet are coupled together by a chimney. In a refinement to this embodiment, the chimney sealably passes through the liquid reservoir.

In a specific embodiment of the foregoing apparatus, the atomizer is a resistive heating element. In a refinement to this embodiment, the wick is partially engages the resistive heating element.

In a specific embodiment of the foregoing apparatus, the atomizer has a tubular form defining an open central passage. In a refinement to this embodiment, the wick passes through the open central passage.

In a specific embodiment of the foregoing apparatus, the atomizing chamber further includes a second wick aperture, and the apparatus is arranged such that a first end of the wick passes through the first wick aperture and a second end of the wick passes through the second wick aperture.

In a specific embodiment of the foregoing apparatus, the wick is fabricated as a bundle of heat resistant fibers. In a refinement to this embodiment, the bundle of heat resistant fibers is fiberglass. In another refinement to this embodiment, the bundle of heat resistant fibers is fabricated from a material selected from; aramid, fluorocarbon, sulfide, melamine, polyimide, carbon, and glass.

In a specific embodiment of the foregoing apparatus, the liquid reservoir is formed as an annular cavity between the interior of the elongated housing and the atomizing chamber. In another specific embodiment of the foregoing apparatus, the liquid reservoir includes an external access opening, for enabling addition of liquid into the liquid reservoir. In a refinement to this embodiment, the external access opening is a removable mouthpiece.

BRIEF DESCRIPTION OF THE DRAWINGS

FIG. **1** is a perspective view drawing of an electronic cigarette according to an illustrative embodiment of the present invention.

FIGS. **2***a*, **2***b*, and **2***c* are a tip end view, a side view, and mouthpiece end view, respectively, drawings of an electronic cigarette according to an illustrative embodiment of the present invention.

FIGS. **3***a* and **3***b* are side view drawings, respectively, of a cartridge portion and a power supply portion of an electronic cigarette according to an illustrative embodiment of the present invention.

FIGS. **4***a*, **4***b*, and **4***c* are tip end view, side section view, and mouthpiece end view, respectively, drawings of an electronic cigarette according to an illustrative embodiment of the present invention.

FIGS. **5***a* and **5***b* are side section view drawings, respectively, of a cartridge portion and a power supply portion of an electronic cigarette according to an illustrative embodiment of the present invention.

FIG. **6** is a functional block diagram an electronic cigarette according to an illustrative embodiment of the present invention.

FIG. **7** is a detailed side section view drawing of a liquid reservoir cartridge according to an illustrative embodiment of the present invention.

FIG. **8** is an exploded view drawing of a liquid reservoir cartridge according to an illustrative embodiment of the present invention.

NJOY Exhibit 1007.009

FIG. **9** is a partially exploded section view drawing of a liquid reservoir cartridge according to an illustrative embodiment of the present invention.

FIG. **10** is a section view drawing of a liquid reservoir cartridge according to an illustrative embodiment of the present invention.

FIGS. **11***a*, **11***b*. **11***c*, and **11***d* are a first end view, a first side section view, a second end view, and a second side section view drawing, respectively, of an atomizing assembly according to an illustrative embodiment of the present invention.

FIGS. **12***a*, **12***b*, and **12***c* are a first end view, a side section view, and a second end view drawing, respectively, of an atomizing chamber according to an illustrative embodiment of the present invention.

FIGS. **13***a*, **13***b*, and **13***c* are a first end view, a side section view, and a second end view drawing, respectively, of a mouthpiece housing according to an illustrative embodiment of the present invention.

DESCRIPTION OF THE INVENTION

Illustrative embodiments and exemplary applications will now be described with reference to the accompanying drawings to disclose the advantageous teachings of the present invention.

While the present invention is described herein with reference to illustrative embodiments for particular applications, it should be understood that the invention is not limited thereto. Those having ordinary skill in the art and access to the teachings provided herein will recognize additional modifications, applications, and embodiments within the scope hereof and additional fields in which the present invention would be of significant utility.

In considering the detailed embodiments of the present invention, it will be observed that the present invention resides primarily in combinations of steps to accomplish various methods or components to form various apparatus and systems. Accordingly, the apparatus and system components and method steps have been represented where appropriate by conventional symbols in the drawings, showing only those specific details that are pertinent to understanding the present invention so as not to obscure the disclosure with details that will be readily apparent to those of ordinary skill in the art having the benefit of the disclosures contained herein.

In this disclosure, relational terms such as first and second, top and bottom, upper and lower, and the like may be used solely to distinguish one entity or action from another entity or action without necessarily requiring or implying any actual such relationship or order between such entities or actions. The terms "comprises," "comprising," or any other variation thereof, are intended to cover a non-exclusive inclusion, such that a process, method, article, or apparatus that comprises a list of elements does not include only those elements but may include other elements not expressly listed or inherent to such process, method, article, or apparatus. An element proceeded by "comprises a" does not, without more constraints, preclude the existence of additional identical elements in the process, method, article, or apparatus that comprises the element.

The present invention advances the art of electronic cigarettes by teaching an electronic cigarette that provides a liquid reservoir, which effectively delivers liquid at the requisite rates from the reservoir to an atomizer in a open atomizing chamber. This arrangement enables production of aerosol of the liquid at desired rates of atomization without excessive liquid transfer during periods of non-use. This function is enabled though utilization of a wick aperture through the atomizing chamber and a wick disposed between the liquid reservoir and the atomizer. The wick enables the transfer of liquid by capillarity in a controlled manner without flooding the open atomization chamber.

Reference is directed to FIG. **1** is a perspective view drawing of an electronic cigarette **2** according to an illustrative embodiment of the present invention. The electronic cigarette **2** comprises a housing having a first elongated portion **10** and a second elongated portion **12**. The second elongated portion **12**, also referred to as the "cartridge" in certain illustrative embodiments, comprises a mouthpiece end **4**, which has an aerosol outlet (not shown) for drawing air through the cartridge **12**. The first elongated portion **10** and the second elongated portion **12** are removable joined together with a mechanical coupler **14**. One or more air inlet vents **16** are provided about the coupler **14** for allowing airflow into the cartridge **12** when the user draws air through the electronic cigarette **2**. The first elongated portion **10** comprises a tip end **6**, which in the illustrative embodiment, is fabricated from a translucent material enabling the transmission of light therethrough. Within the second elongated portion **12** is disposed a liquid reservoir (not fully shown). The liquid reservoir includes a clear or translucent window **13** to the exterior of the housing **12** for visually determining the liquid level **15** within the liquid reservoir.

Now, considering FIGS. **2***a*, **2***b*, and **2***c*, these are a tip end view, a side view, and mouthpiece end view, respectively, drawing of an electronic cigarette according to an illustrative embodiment of the present invention. Note that the first elongated portion **10** and second elongated portion **12** combine at coupler **14** to present a complete electronic cigarette **2** that closely resembles a tobacco cigarette. The cartridge **12** is fabricated with a finished material resembling the filter of a tobacco cigarette, and the first elongated portion **10** is fabricated to resemble the tobacco roll of a tobacco cigarette. As noted above, the cartridge **12** includes a window **13** for visually determining the liquid level of the internal liquid reservoir (not shown). The mouthpiece end **4** includes an aerosol outlet opening **5**, for drawing air and aerosol out of the cartridge **12**. Air is inlet to the electronic cigarette **2** at the vent openings **16** located at the coupler **14**. The air inlet openings **16** can be located elsewhere on the electronic cigarette **2**, and is a matter of design choice. In the illustrative embodiment, the tip end **6** is a translucent gray material resembling an ash.

Reference is directed to FIGS. **3***a* and **3***b*, which are side view drawings, respectively, of a cartridge portion **12** and a power supply portion **10** of an electronic cigarette according to an illustrative embodiment of the present invention. A threaded extension **20** on the power supply portion **10** of the housing threadably engages the mechanical coupler **14** on the cartridge portion **12**. In addition, as will be described more fully hereinafter, an electrical connection is also facilitated in the connection between the threaded extension **20** and the mechanical coupler **14**. The cartridge portion **12** can thusly be installed, uninstalled, and replaced as needed. The cartridge portion contains the liquid reservoir and the window **13** provides the visual cue as to the liquid remaining. The tip end **4** can be removed in certain illustrative embodiments to facilitate the addition of liquid to the reservoir. The tip end **6** glow by light of an internal amber LED in response to suction pressure at the aerosol outlet **5**.

Reference is directed to FIGS. **4***a*, **4***b*, and **4***c*, which are tip end view, side section view, and mouthpiece end view, respectively, drawings of an electronic cigarette according to an illustrative embodiment of the present invention. Reference is additionally directed to FIGS. **5***a* and **5***b*, which are side section view drawings, respectively, of a cartridge portion and

NJOY Exhibit 1007.010

a power supply portion of an electronic cigarette correspond to this illustrative embodiment. FIGS. **4** and **5** correspond to the same illustrative embodiment and provide details of the internal structures of the illustrative embodiment. The tip end **4** is a resilient insert that engages the interior of the cartridge housing **12** and provides the aerosol outlet **5**, which is a passage formed therethrough. Within the cartridge housing **12** is an atomizing chamber **38** that has an open chimney **36** extending to the aerosol outlet **5**. The chimney **36** is located within the cartridge housing by a resilient seal **42**. The annual space formed between the interior of the cartridge housing **12** and the chimney **36** defines the liquid reservoir **43**. At the upper end, resilient seal **42** closes and seals the liquid reservoir **43**. The lower end of the reservoir **43** engages the atomizer assembly **28**, which will be more fully described hereinafter.

In FIGS. **4** and **5**, the atomizer assembly **28** include the atomizer **32**, which is disposed within the atomizer chamber **38**. In addition, the atomizer assembly **28** comprises the mechanical coupler **14** that engages the threaded extension **20** of the power supply portion **10**. Within the mechanical coupler **14**, and also a part of the atomizer assembly **28**, is an electrical coupler **22** that has an air inlet port **26** formed therethrough, which is pneumatically coupled into the atomizing chamber **38**. Thusly, the pathway for the flow of fresh air in and aerosol out includes air drawn through the mechanical coupler **14**, through the air inlet port **26**, to the atomizer **32** within the atomizing chamber **38**, up the chimney **36** and out the aerosol outlet **5**.

In FIGS. **4** and **5**, the power supply portion **10** of the housing has a threaded extension **20** that engages the mechanical coupler **14**. There is also a corresponding electrical connection such that the power supply portion **10** can deliver electric current to the atomizer **32** to facilitate generation of aerosol. Two conductors are provided, including the outer mechanical connection and the central pneumatic/electric connection. Suitable milling for air-flow channels is provided to facilitate solid mechanical, conductive electrical, and pneumatic connections. In the illustrative embodiment, power is derived from a storage battery **11**. A pressure sensor **48** detects negative pressure within the housing **10** and energizes the atomizer. The pressure sensor **46** is located by a pressure seal **50**. A draw circuit **52** provides the electrical operation functions. In addition, and amber LED **54** is disposed to illuminate through the translucent tip **6** to emulate burning ash while the draw pressure sensor **48** detects negative pressure.

Reference is directed to FIG. **6**, which is a functional block diagram an electronic cigarette according to an illustrative embodiment of the present invention. This diagram presents the electrical functions of the electronic cigarette. The battery **60** provides power to a draw circuit **70**. A pressure sensor **68** is disposed within the cigarette housing **68**. When negative pressure is detected, the draw circuit **70** delivers electric power to the atomizer **64** and the amber LED **72**. This action causes aerosol to be produced in the presence of the negative pressure, and the tip of the electronic cigarette to glow amber so long as the negative pressure continues. The atomizer **64** is eclectically coupled to the circuit through electrical coupler **62**.

Reference is directed to FIG. **7**, which is a detailed side section view drawing of a liquid reservoir cartridge according to an illustrative embodiment of the present invention. This drawing provides further details into the structure and operation of the liquid reservoir cartridge assembly. The cartridge comprises an outer housing **12** that is closed at the upper end by the tip end resilient insert **4**, which has the aerosol port **5** formed therethrough. The lower end of the housing **12** is closed with the atomizer assembly **28**, which has the mechanical coupler **14** at the extreme end. Plural air inlet vents **16** are formed though the mechanical coupler so that fresh air can enter while it is secured to the power supply housing. Within the cartridge housing **12** is the atomizing chamber **38** that is pneumatically coupled to the chimney **36**, which is aligned with the aerosol outlet **5**. The chimney **36** is located and sealed at the upper end by resilient seal **42**. The annual space **43** between the chimney **36** and the interior of the housing **12** defines the liquid reservoir **43**. Note that there is a thinner annually cavity **39** formed between the exterior of the atomizing chamber **38** and interior of the cartridge housing **12**. The fluid **44** is stored in the fluid reservoir **43**, and is also capable of flowing into the annular cavity **39** to saturate wick **37**.

In FIG. **7**, the atomizing assembly **28** is comprised of several components. The atomizer **32** is a coiled nickel-chromium heater through which the wick **37** passes. The wick **37** passes through wick apertures in the atomizing chamber (not shown) on its two end, and into the annular cavity **39**. The atomizer assembly **28** is machined from a suitable metal and includes the mechanical couple **14**, the electrical coupler **22**, which is supported by an insulative support **24**, and which has the air inlet port **26** formed therethrough. During operation, when there is a negative pressure imposed on the system by drawing air out of the aerosol outlet **5**, and while electric current is delivered to the atomizer **36**, air enters the air inlet port **26** and carries aerosol of the liquid **46** away from the atomizer **32**, up the chimney **36** and out the aerosol outlet **5**. As the liquid in the wick **37** is depleted by the atomizer **32**, capillary action draws additional liquid from the liquid reservoir **43**, through the cavity **39** and to the atomizer **32**.

Reference is directed to FIG. **8**, which is an exploded view drawing of an atomizer **28**, atomizing chamber **38**, chimney **36** and resilient seal **42** according to an illustrative embodiment of the present invention. In the illustrative embodiment, the atomizing chamber **38** and chimney **36** are formed as a single unit. The resilient seal **42** is a donut shaped polymeric material that is pressed onto the upper end of the chimney **36**. The atomizing chamber **38** includes a pair of opposing wick apertures **40** formed therein, which provide clearance for the wick **37** to pass into the atomizing chamber **38**. The atomizing assembly **28** includes the mechanical coupler **14** at its lower end and the atomizer **32** at its upper end. The wick **37** passes through the center of the atomizer **32**. The atomizing assembly has a pair of semicircular recesses **30** formed therein which align cooperatively with the wick apertures **40** in the atomizing chamber when the two units are engaged. This results in a circular aperture through which the wick **37** passes with a slightly compressive fit. This arrangement enables liquid to pass through by capillarity of the wick **37**, but prevents the liquid from flooding the atomizing chamber **38**, which would be detrimental or atomizer function.

Reference is directed to FIG. **9**, which is a partially exploded side section view drawing, and to FIG. **10**, which is an assembled side section view drawing, of a liquid reservoir cartridge according to an illustrative embodiment of the present invention. The wick **37** passes through the atomizer **32** and extends to the outer periphery of the atomizer assembly **28**. The atomizing chamber **38** is engaged with the atomizing assembly **28**, thereby perfecting the wick aperture **40** as described hereinbefore, and enclosing the atomizing chamber **38**. The resilient seal **42** is disposed between the exterior of the chimney **36** and the interior of the housing **12**, thereby sealing the upper end of the fluid reservoir **43**. The tip end resilient insert **4**, with the aerosol outlet port **5**, closes the

upper end of the cartridge housing **12**, and the chimney **36** is thereby aligned and sealed to the aerosol outlet **5**. The housing **12** is engaged with the atomizer assembly **28**, which urges the ends of the wick **37** downwardly and constrains them within the annular cavity **39** formed between the interior of the housing **12** and the exterior of the atomizing chamber **38**. The wick **37** is thusly enabled to absorb the liquid (not shown). The atomizer **32** has a first end electrically coupled to the atomizer assembly body **28** and a second end electrically coupled to the electrical coupler **22**. The electrical circuit is completed when the cartridge is engaged with the power supply portion, discussed hereinbefore. The atomizing chamber **38** is thusly sealed but for the entry of fresh air through air inlet port **26** and the exit of air and aerosol up chimney **36** and out aerosol outlet **5**.

Reference is directed to FIGS. **11***a*, **11***b*. **11***c*, and **11***d*, which are a first end view, a first side section view, a second end view, and a second side section view drawing, respectively, of an atomizing assembly **28** according to an illustrative embodiment of the present invention. The assembly is based on a metal body **28** that has a electrical coupler **22** insulatively supported **24** therein. The electrical coupler **22** has an air inlet port formed therethrough. The electrical coupler has a pair of air recesses **27** machined on its face so that an air channel is created when the cartridge is engaged with the power supply portion of the electronic cigarette. In this manner, the air path is from the exterior, through the air inlet vents **16**, through the air recesses **27**, through the air inlet port **26** of the electrical coupler and u to the atomizer **32**. The wick **37** is positioned through the central cavity of the atomizer **32** and extends through the pair of semicircular recesses **30** in the body **28**. The wick is a fibrous bundle, which is formed from a temperature resistant material, and may be selected from amongst aramid, fluorocarbon, sulfide, melamine, polyimide, carbon, and glass fibers. Or, from another suitable materials known to those skilled in the art.

Reference is directed to FIGS. **12***a*, **12***b*, and **12***c*, which are a first end view, a side section view, and a second end view drawing, respectively, of an atomizing chamber **38** and chimney **6** according to an illustrative embodiment of the present invention. In the illustrative embodiment, the atomizing chamber **38** and chimney **36** are formed as a single unit. The atomizing chamber **38** and the chimney **36** are cylindrical in form. The resilient seal **42** is a donut shaped polymeric material that is pressed onto the upper end of the chimney **36**. The atomizing chamber **38** includes a pair of opposing wick apertures **40** formed therein, which provide clearance for the wick (not shown) to pass into the atomizing chamber **38**.

Reference is directed to FIGS. **13***a*, **13***b*, and **13***c*, which are a first end view, a side section view, and a second end view drawing, respectively, of a mouthpiece housing **12** according to an illustrative embodiment of the present invention. The housing **12** is a cylindrical plastic tube in the illustrative embodiment. The plastic is transparent or translucent to facilitate visual inspection of the liquid content. The tip end resilient insert **4**, with the aerosol outlet port **5**, closes the upper end of the cartridge housing **12**.

Thus, the present invention has been described herein with reference to a particular embodiment for a particular application. Those having ordinary skill in the art and access to the present teachings will recognize additional modifications, applications and embodiments within the scope thereof.

It is therefore intended by the appended claims to cover any and all such applications, modifications and embodiments within the scope of the present invention.

What is claimed is:

1. An electronic cigarette apparatus, comprising:

an elongated housing having a mouthpiece with an aerosol outlet;

an atomizer disposed within an atomizing chamber, and operable to selectively generate an aerosol of the liquid in response to suction pressure at said aerosol outlet;

said atomizing chamber having an air inlet, an atomizer outlet coupled to said aerosol outlet, and a first wick aperture;

a liquid reservoir disposed within said elongated housing and sealably separated from said atomizing chamber, and

a wick disposed through said first wick aperture between said liquid reservoir and said atomizing chamber and configured to transfer the liquid by capillarity from said liquid reservoir to said atomizer.

2. The apparatus of claim **1**, further comprising:

an inlet vent formed on the exterior of said elongated housing and coupled to deliver air to said atomizing chamber air inlet.

3. The apparatus of claim **2**, and wherein said inlet vent is coupled to said atomizing chamber air inlet by a conduit.

4. The apparatus of claim **3**, and wherein said conduit sealably passes through said liquid reservoir.

5. The apparatus of claim **1**, and wherein said atomizer outlet and said aerosol outlet are coupled by a chimney.

6. The apparatus of claim **5**, and wherein said chimney sealably passes through said liquid reservoir.

7. The apparatus of claim **1**, and wherein said atomizer is a resistive heating element.

8. The apparatus of claim **7**, and wherein said wick is partially engages said resistive heating element.

9. The apparatus of claim **1**, and wherein said atomizer has a tubular form defining an open central passage.

10. The apparatus of claim **9**, and wherein said wick passes through said open central passage.

11. The apparatus of claim **1**, and wherein said atomizing chamber further comprises a second wick aperture, and wherein a first end of said wick passes through said first wick aperture and a second end of said wick passes through said second wick aperture.

12. The apparatus of claim **1**, and wherein said wick is fabricated as a bundle of heat resistant fibers.

13. The apparatus of claim **12**, and wherein said bundle of heat resistant fibers is fiberglass.

14. The apparatus of claim **12**, and wherein said bundle of heat resistant fibers is fabricated from a material selected from; aramid, fluorocarbon, sulfide, melamine, polyimide, carbon, and glass.

15. The apparatus of claim **1**, and wherein said liquid reservoir is formed as an annular cavity between the interior of said elongated housing and said atomizing chamber.

16. The apparatus of claim **1**, and wherein said liquid reservoir includes an external access opening, for enabling addition of liquid into said liquid reservoir.

17. The apparatus of claim **16**, and wherein said external access opening is a removable mouthpiece.

* * * * *

NJOY Exhibit 1007.012