US 20140261495A1

(19) United States

(12) Patent Application Publication

Novak, III et al.

(10) Pub. No.: US 2014/0261495 A1

(43) Pub. Date: Sep. 18, 2014

(54) **CARTRIDGE AND CONTROL BODY OF AN AEROSOL DELIVERY DEVICE INCLUDING ANTI-ROTATION MECHANISM AND RELATED METHOD**

(71) Applicant: **R.J. REYNOLDS TOBACCO COMPANY**, Winston-Salem, NC (US)

(72) Inventors: **Charles Jacob Novak, III**, Winston-Salem, NC (US); **Michael Ryan Galloway**, Winston-Salem, NC (US); **John DePiano**, Burlington, MA (US); **Frank S. Silveira**, Wilmington, MA (US); **Frederic Philippe Ampolini**, Winston-Salem, NC (US); **Michael Laine**, Newburyport, MA (US); **Raymond Charles Henry, JR.**, Cary, NC (US)

(73) Assignee: **R.J. REYNOLDS TOBACCO COMPANY**, Winston-Salem, NC (US)

(21) Appl. No.: **13/840,264**

(22) Filed: **Mar. 15, 2013**

Publication Classification

(51) **Int. Cl.**

A24F 47/00 (2006.01)

H05B 3/00 (2006.01)

(52) **U.S. Cl.**

CPC ***A24F 47/008*** (2013.01); ***H05B 3/00*** (2013.01)

USPC **131/329**; 392/386; 29/592.1

(57) **ABSTRACT**

The present disclosure relates to aerosol delivery devices including a cartridge and a control body. The control body may include a coupler and the cartridge may include a base. The base may be configured to releasably engage the cartridge. Further the base and the coupler may include anti-rotation mechanisms configured to prevent rotation of the cartridge relative to the base when engaged with one another. The anti-rotation mechanisms may include alternating protrusions and recesses in some embodiments. Related methods are also provided.

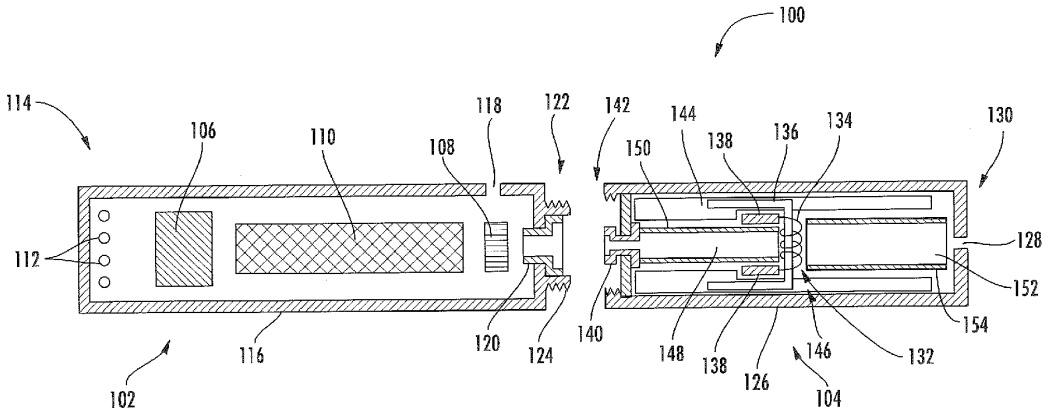

NJOY Exhibit 1013.001

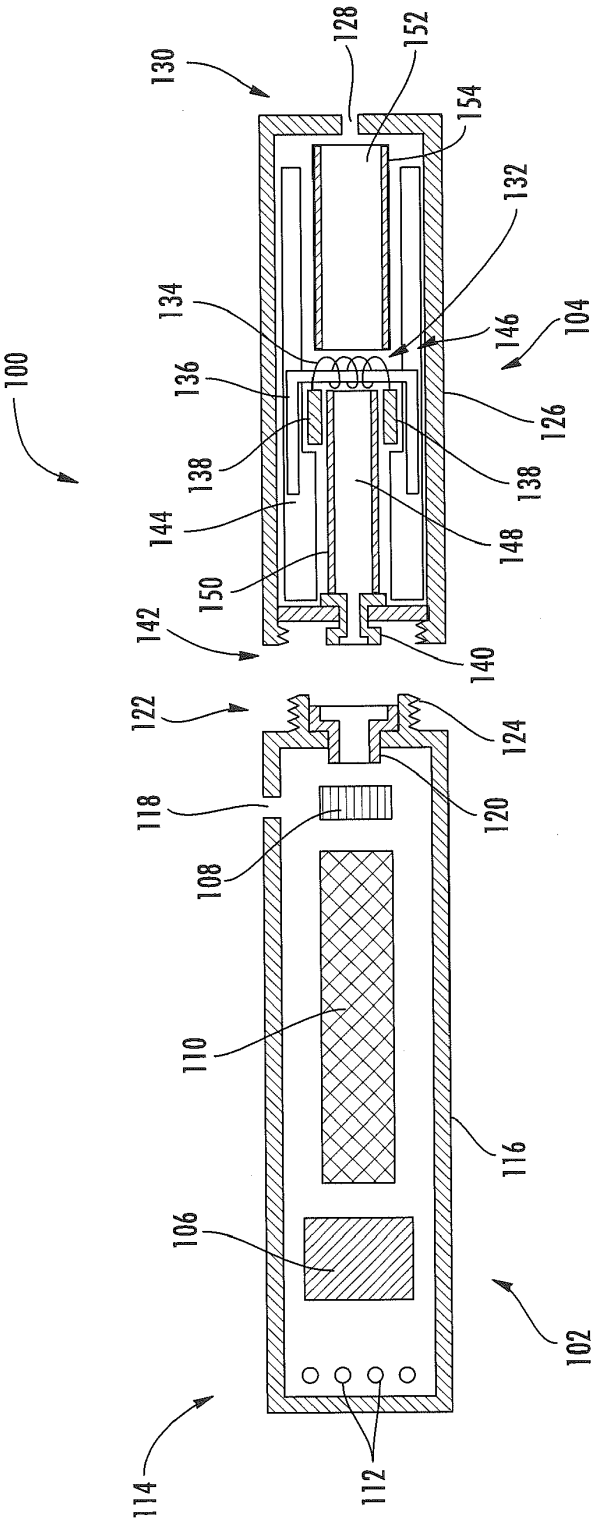
100
130
128
152
154
132
134
146
104
136
126
138
138
144
148
150
142
140
122
124
118
120
108
110
116
106
102
114
112

FIG. 1

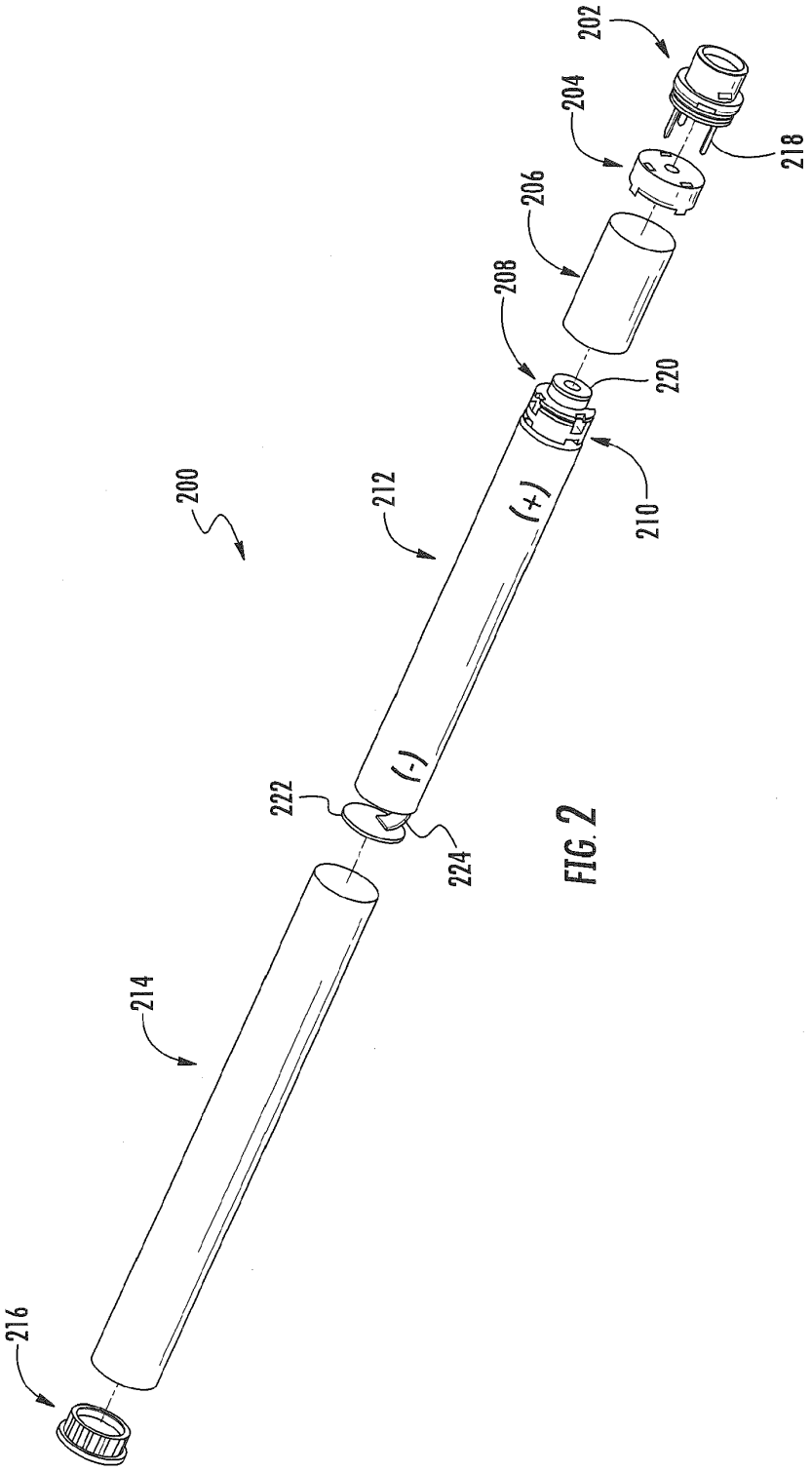

FIG. 2

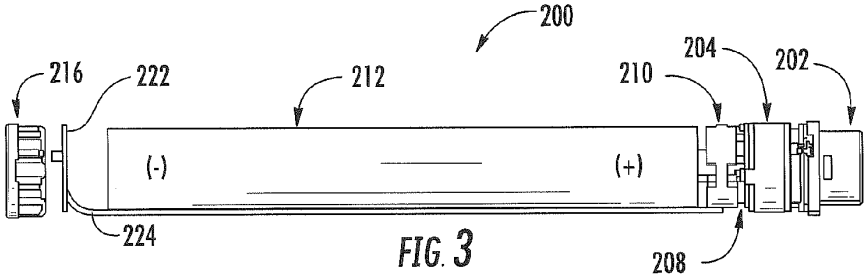

FIG. 3

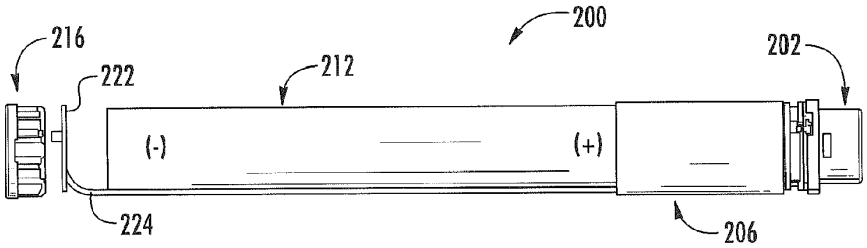

FIG. 4

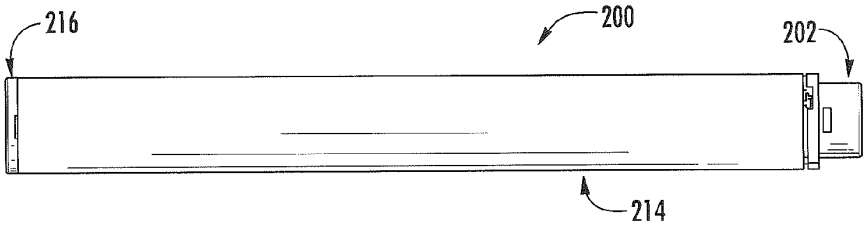

FIG. 5

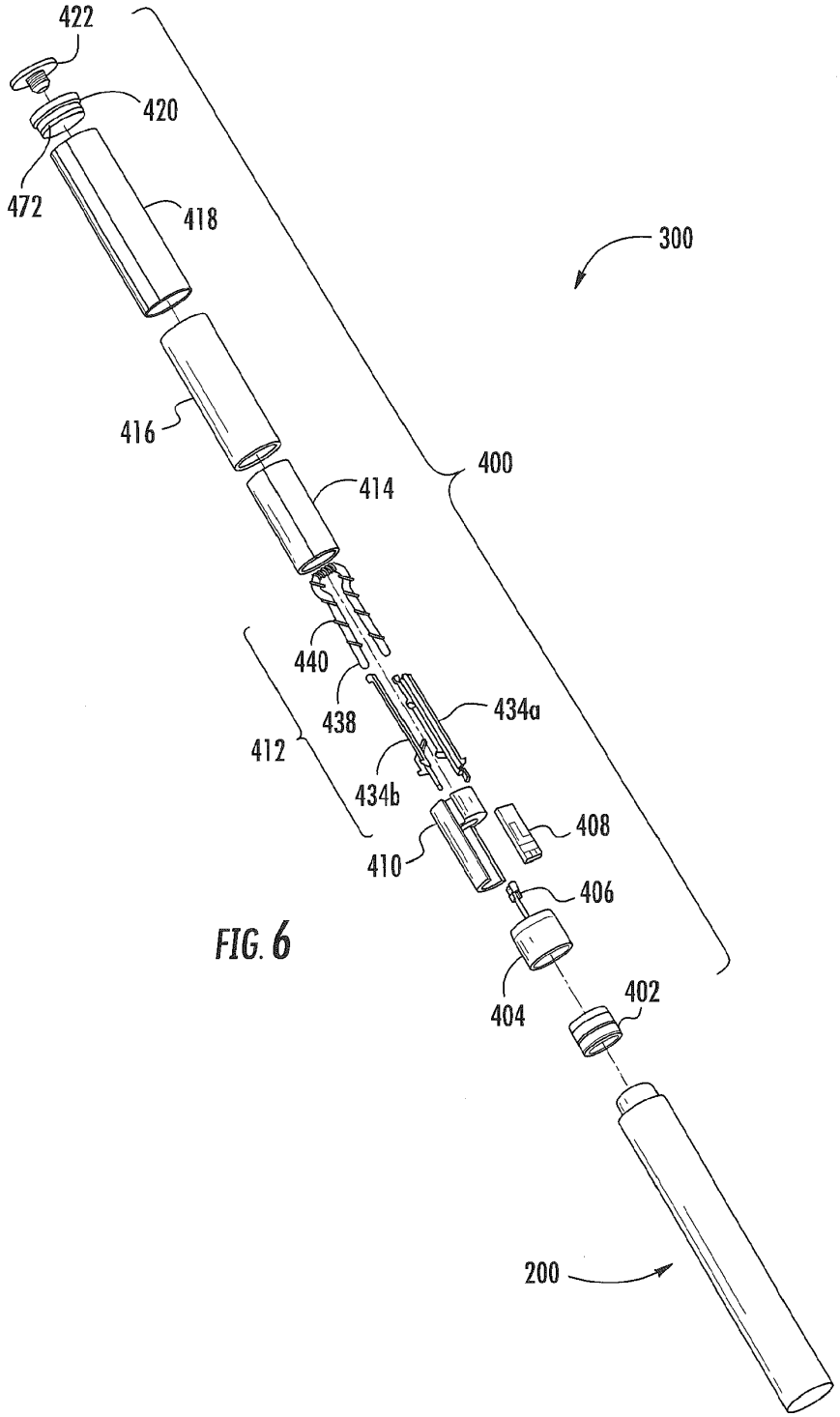
422
420
472
418
300
416
400
414
440
438
434a
412
434b
408
410
406
404
402
200

FIG. 6

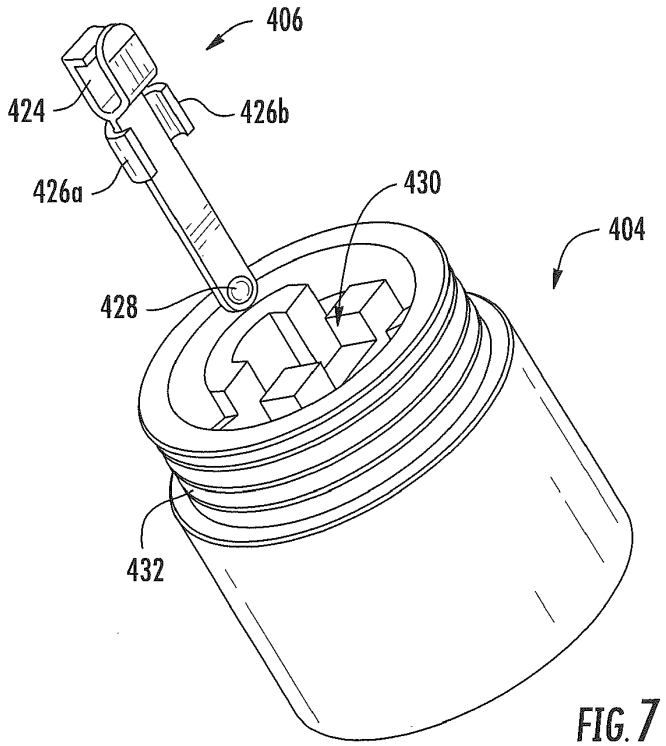

FIG. 7

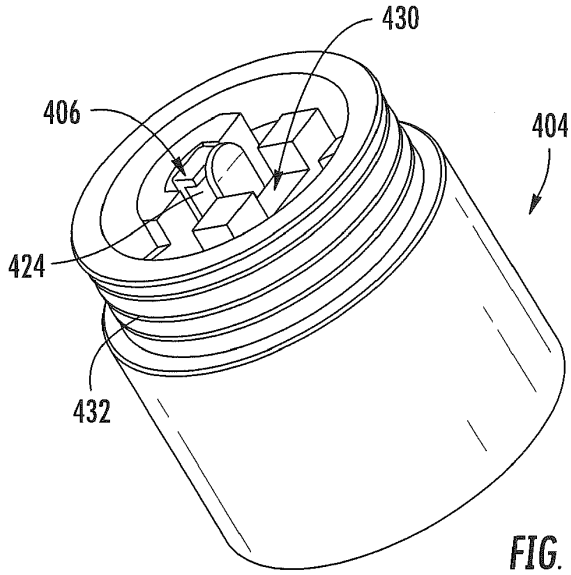

FIG. 8

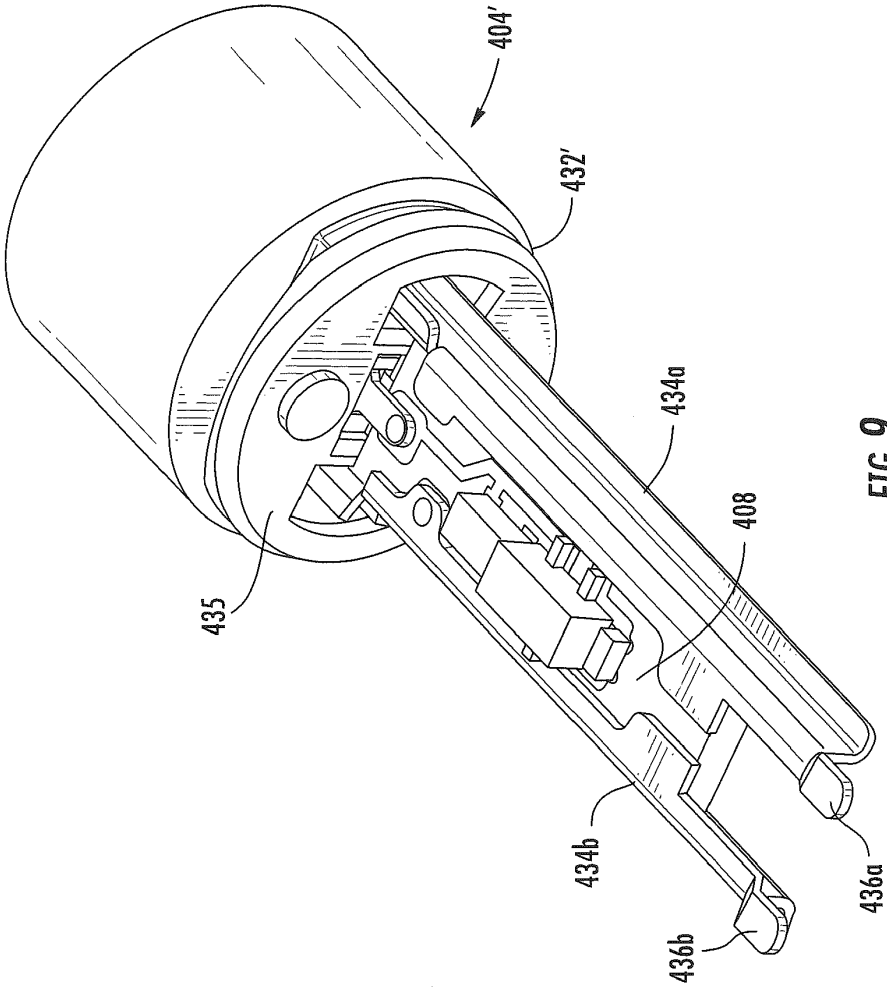

FIG. 9

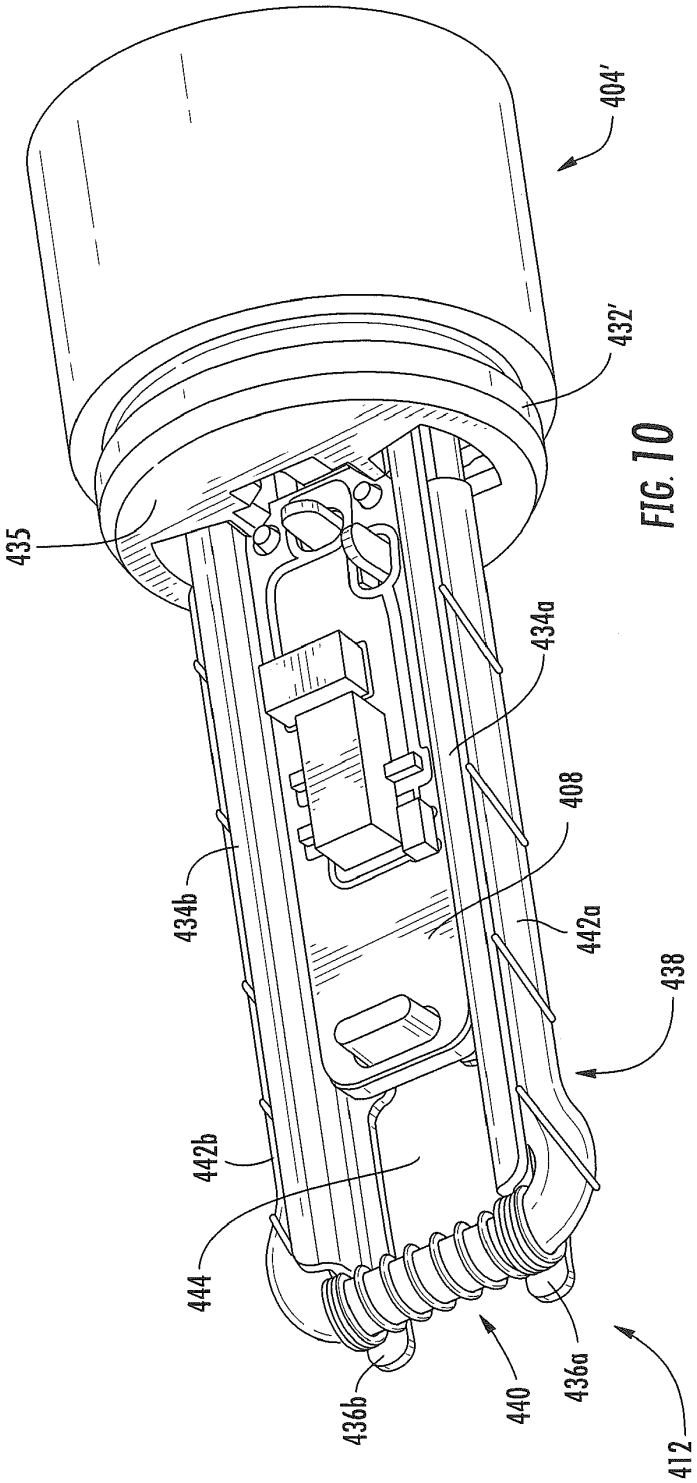

FIG. 10

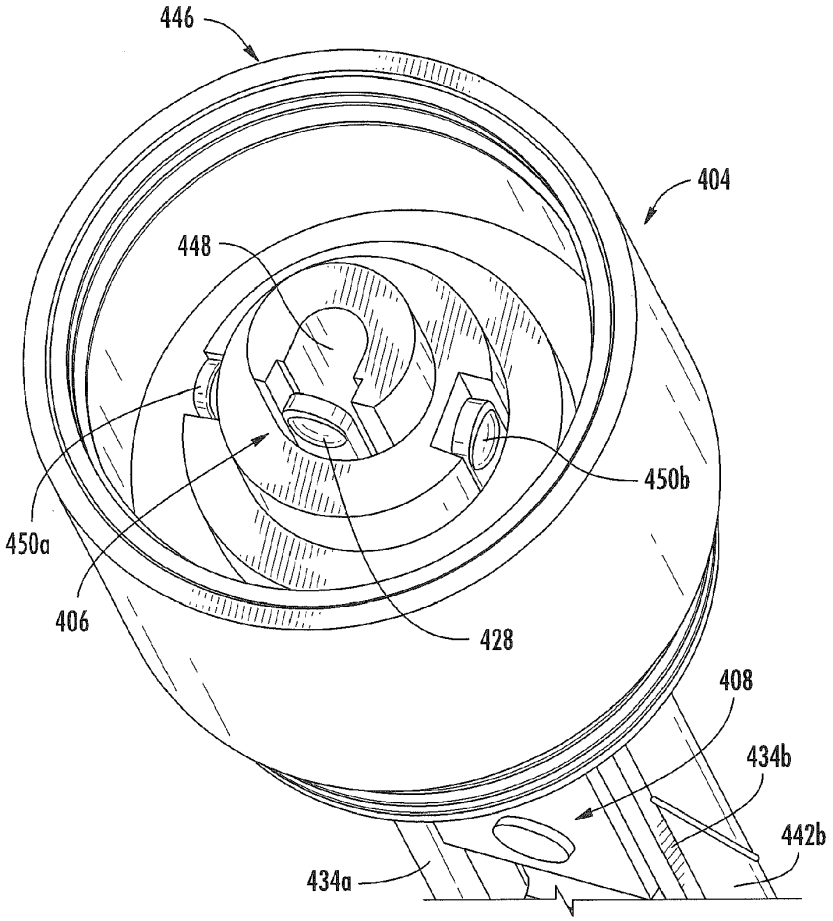

FIG. 11

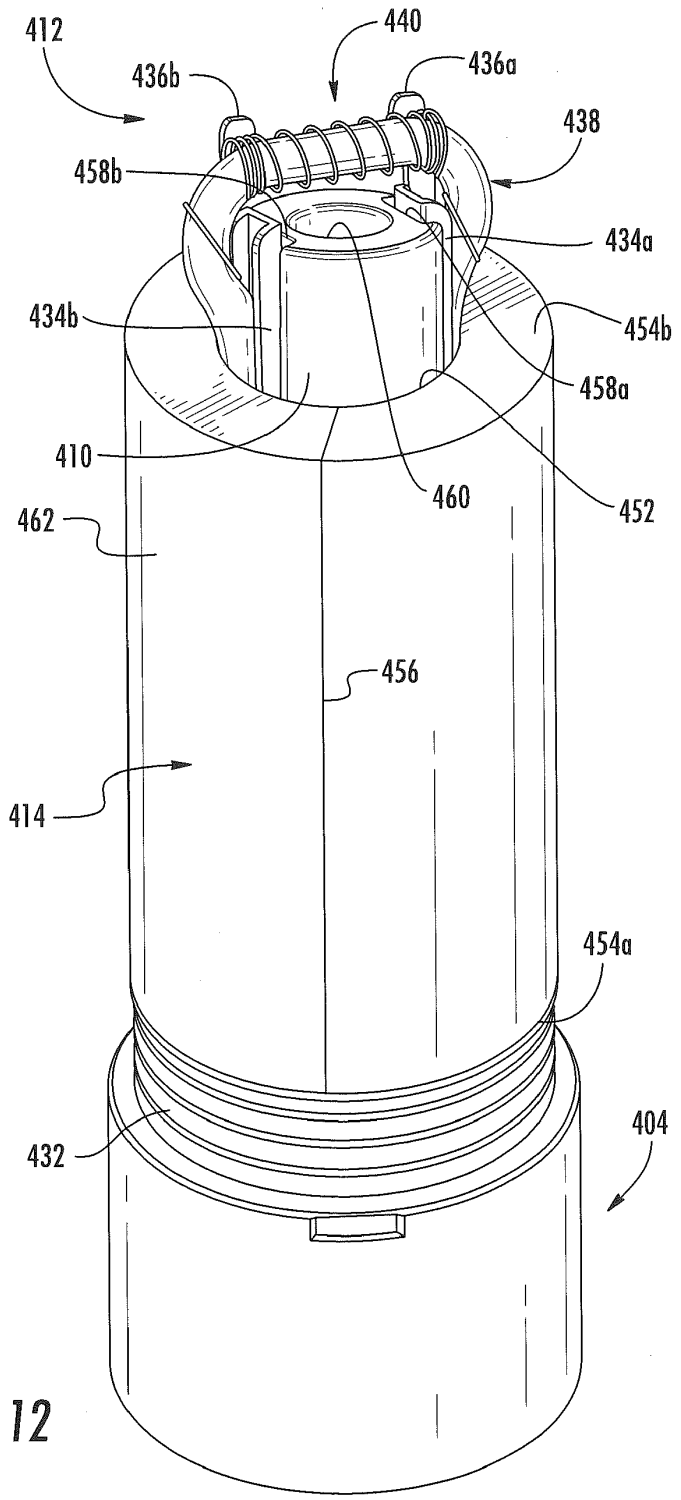
412
440
436b
436a
438
458b
434a
434b
454b
458a
410
460
452
462
456
414
454a
432
404

FIG. 12

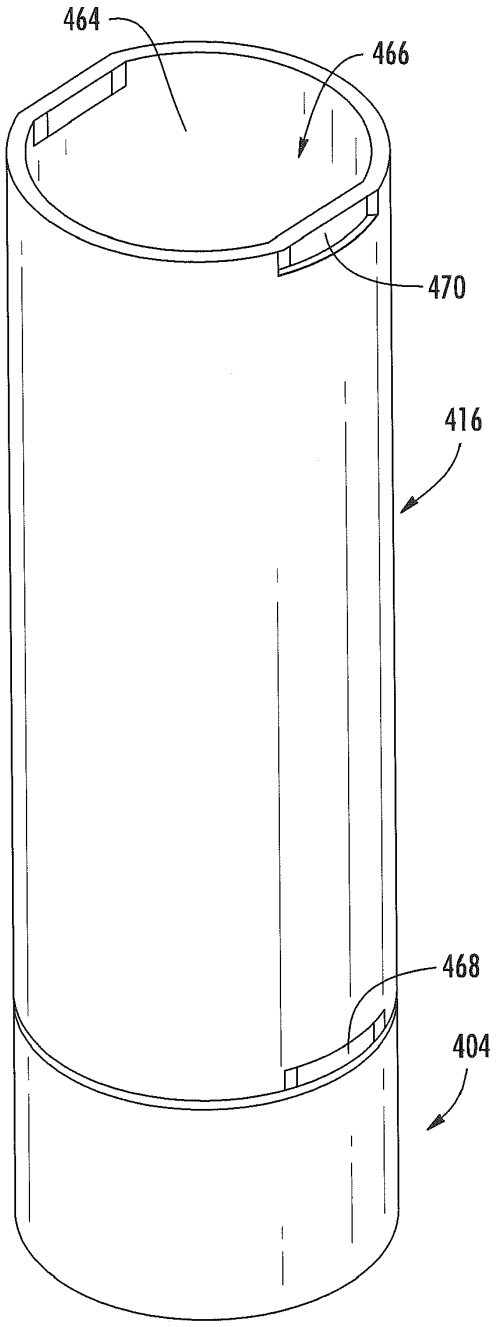

FIG. 13

NJOY Exhibit 1013.011

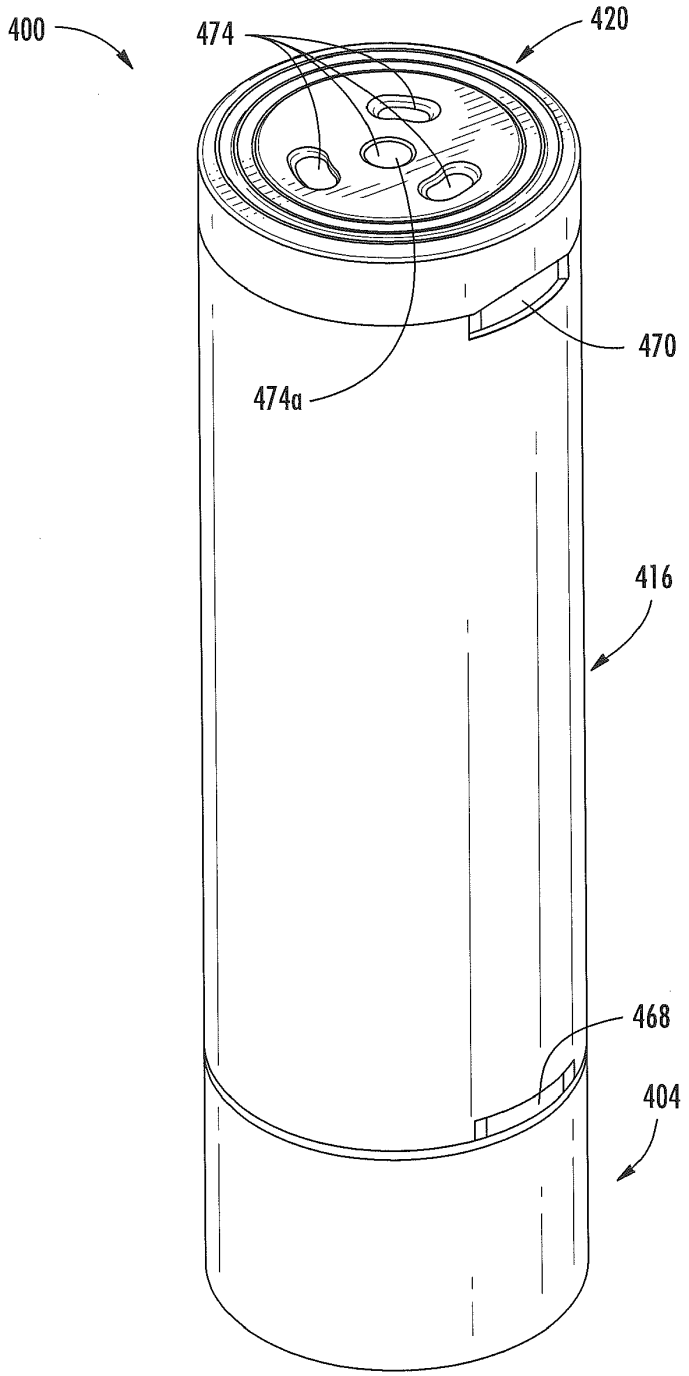

FIG. 14

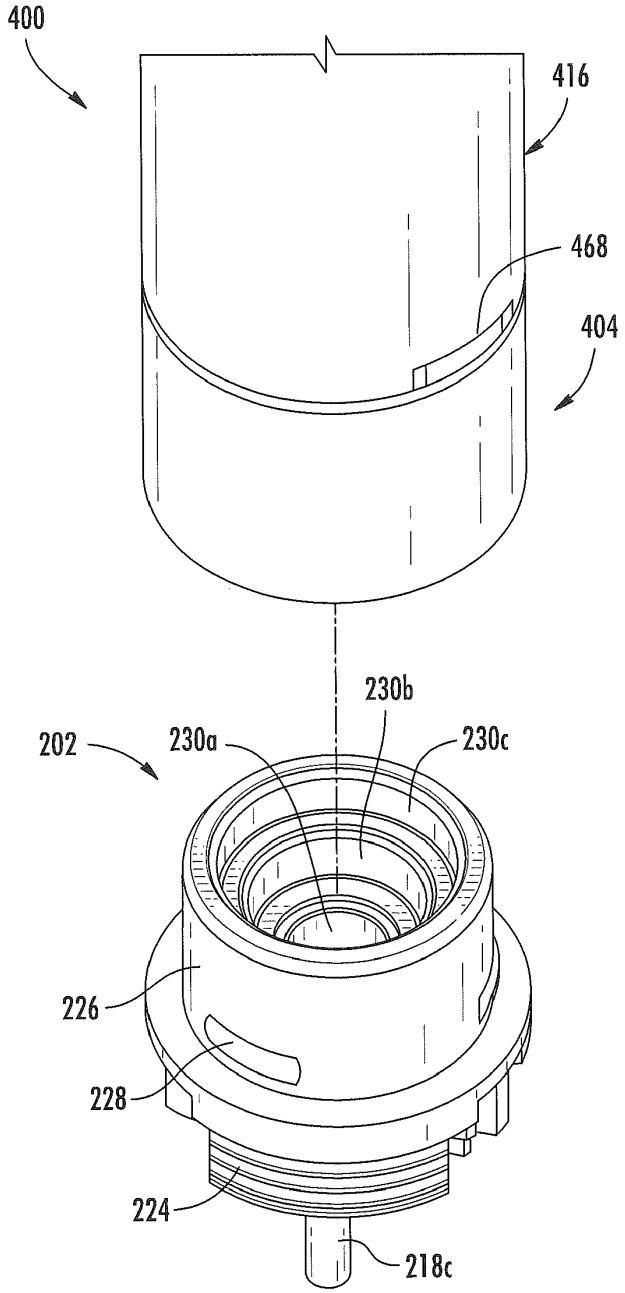

FIG. 15

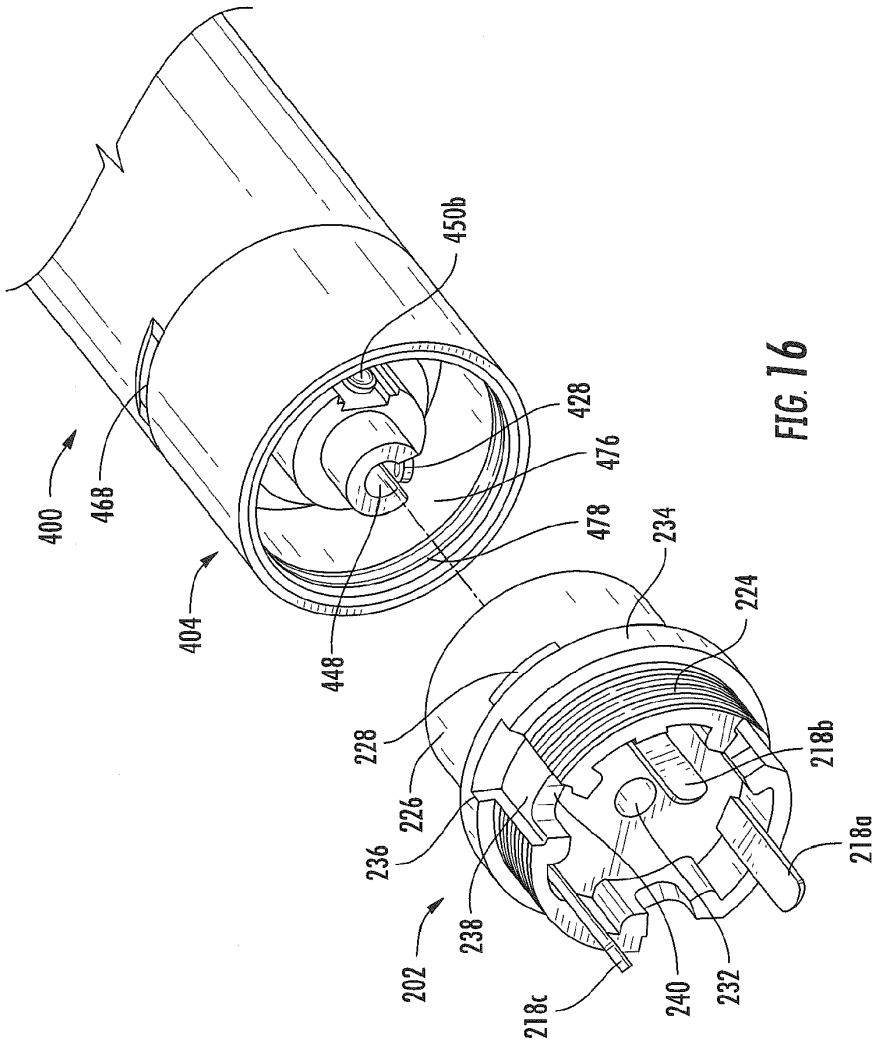
400
468
404
448
450b
428
476
478
234
224
228
226
236
238
202
218c
240
232
218b
218a

FIG. 16

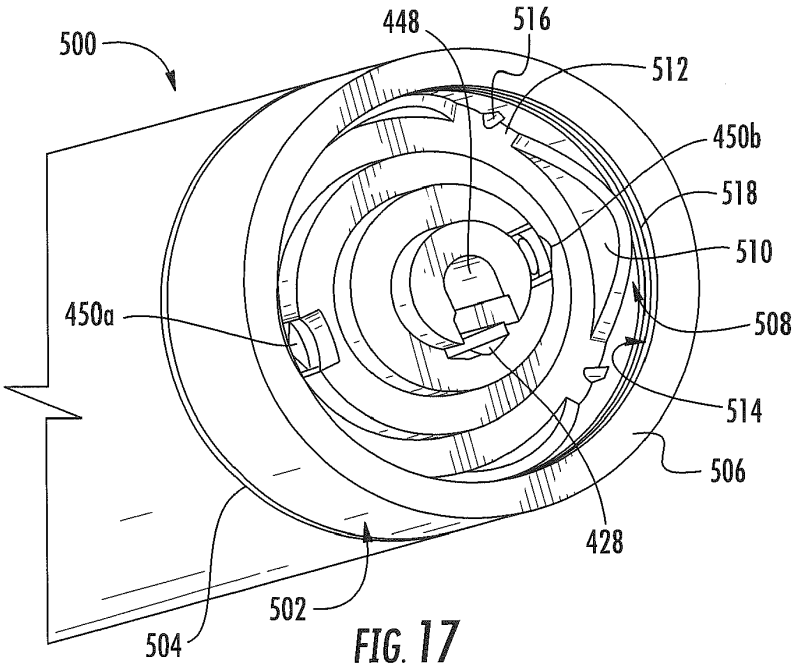
500
448
516
512
450b
518
510
508
450a
514
506
428
502
504

FIG. 17

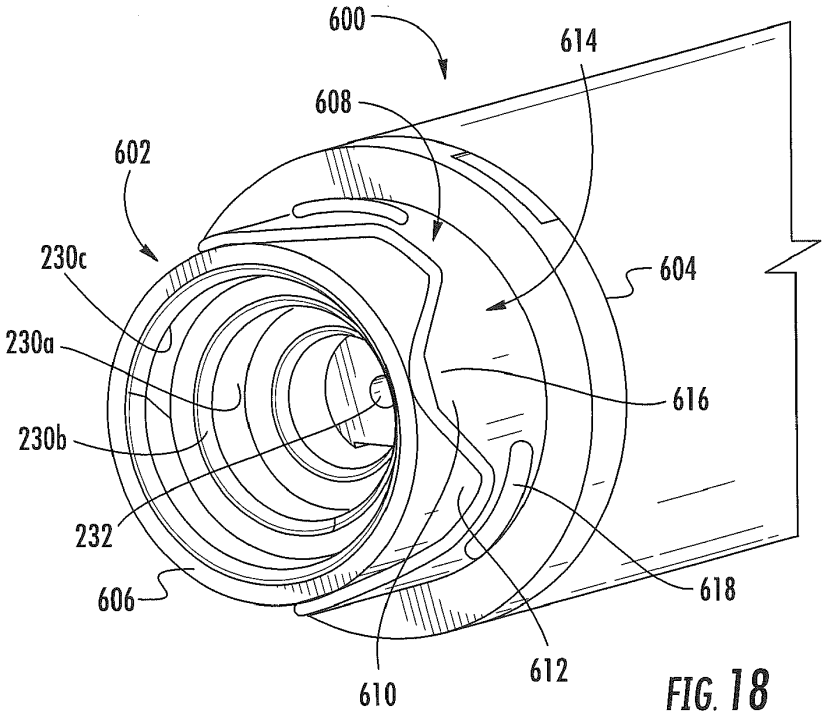
600
614
608
602
230c
604
230a
616
230b
232
606
618
610
612

FIG. 18

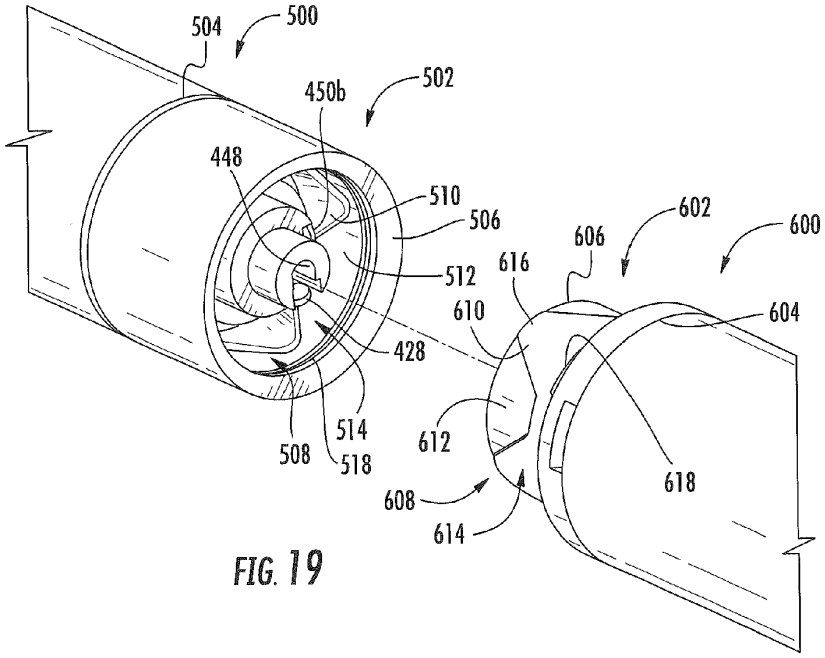
504
500
450b
502
448
510
506
512
602
600
606
616
610
604
428
514
612
508
518
618
608
614

FIG. 19

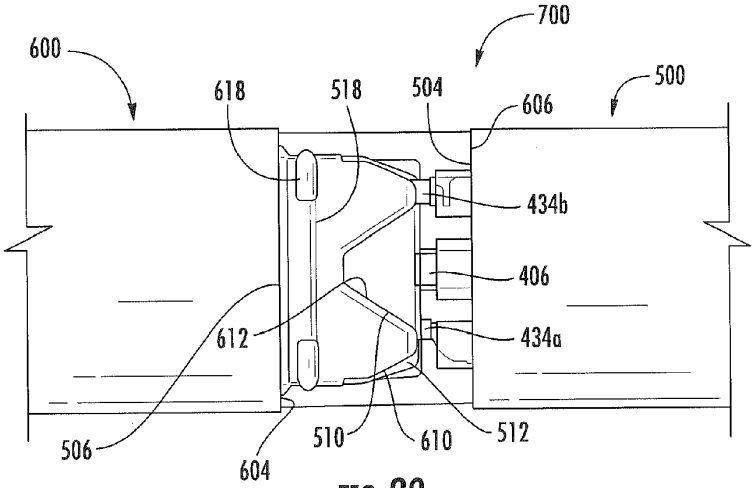
700
600
618
518
504
606
500
434b
406
612
434a
506
604
510
610
512

FIG. 20

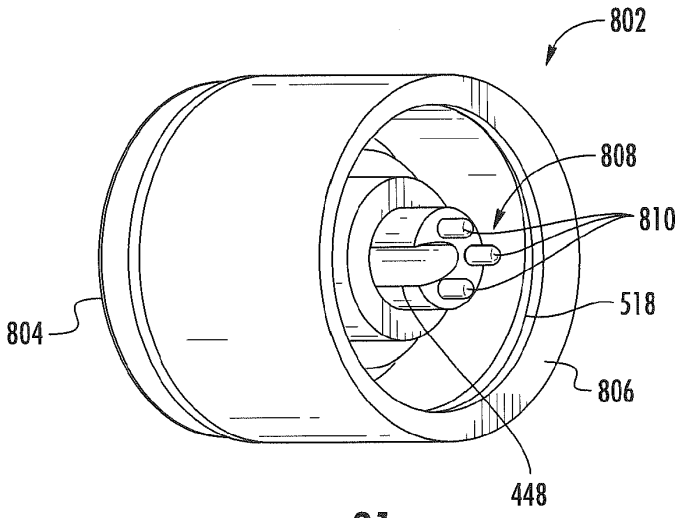
802
808
810
518
804
806
448

FIG. 21

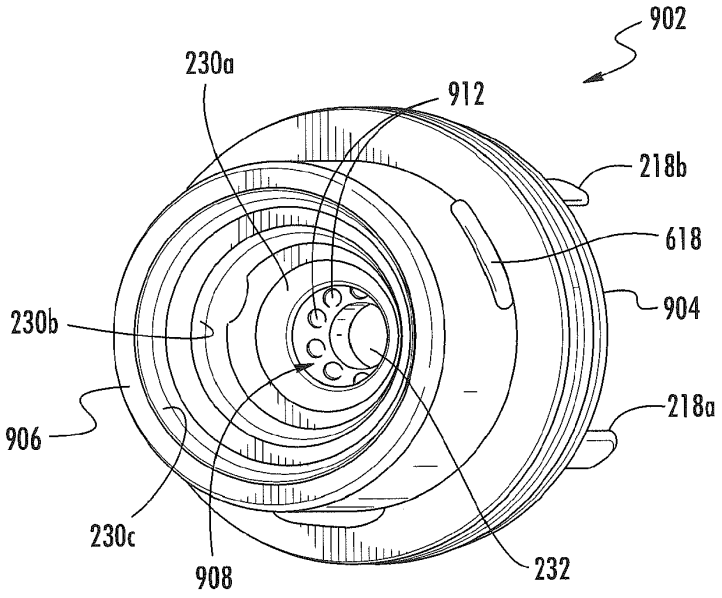
902
230a
912
218b
618
904
230b
906
218a
230c
908
232

FIG. 22

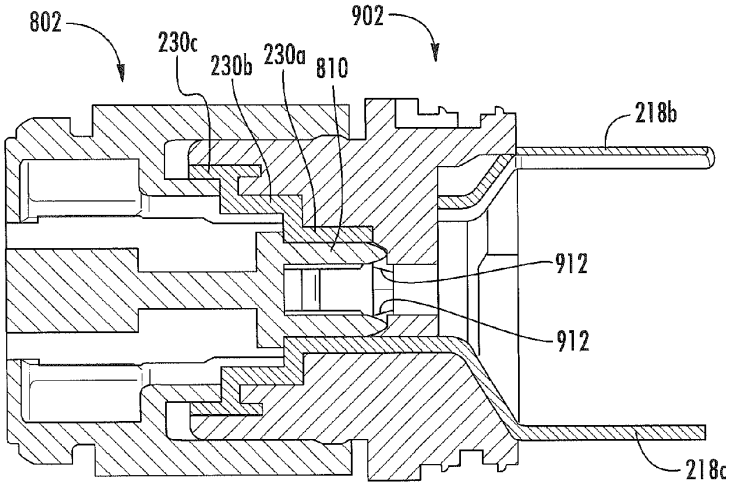

FIG. 23

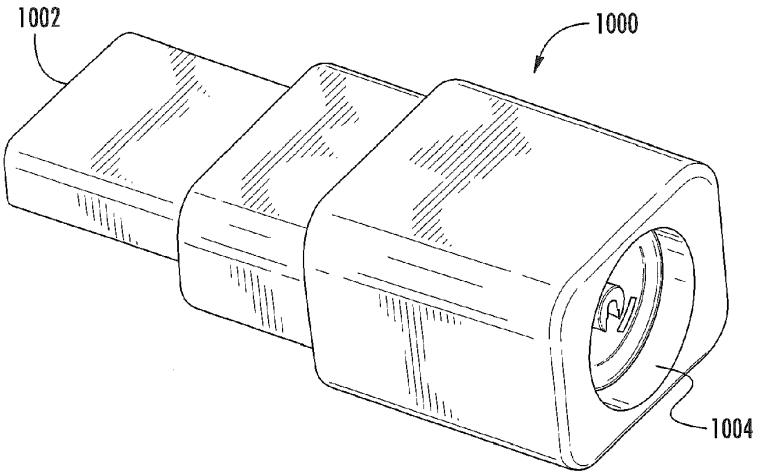

FIG. 24

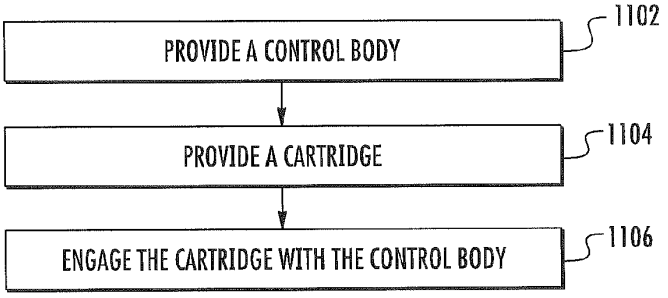
PROVIDE A CONTROL BODY
1102
PROVIDE A CARTRIDGE
1104
ENGAGE THE CARTRIDGE WITH THE CONTROL BODY
1106

FIG. 25

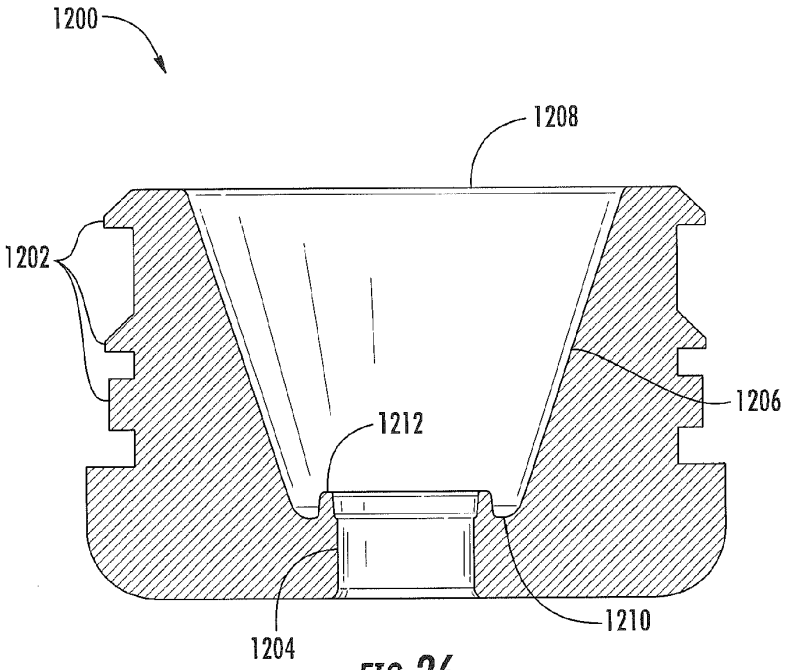
1200
1208
1202
1206
1212
1204
1210

FIG. 26

CARTRIDGE AND CONTROL BODY OF AN AEROSOL DELIVERY DEVICE INCLUDING ANTI-ROTATION MECHANISM AND RELATED METHOD

FIELD OF THE DISCLOSURE

[0001] The present disclosure relates to a cartridge and a control body of an aerosol delivery device such as a smoking article, and more particularly to a cartridge and a control body of an aerosol delivery device such as a smoking article including an anti-rotation mechanism. The smoking article may be configured to heat an aerosol precursor, which may be made or derived from tobacco or otherwise incorporate tobacco, to form an inhalable substance for human consumption.

BACKGROUND

[0002] Many smoking devices have been proposed through the years as improvements upon, or alternatives to, smoking products that require combusting tobacco for use. Many of those devices purportedly have been designed to provide the sensations associated with cigarette, cigar, or pipe smoking, but without delivering considerable quantities of incomplete combustion and pyrolysis products that result from the burning of tobacco. To this end, there have been proposed numerous smoking products, flavor generators, and medicinal inhalers that utilize electrical energy to vaporize or heat a volatile material, or attempt to provide the sensations of cigarette, cigar, or pipe smoking without burning tobacco to a significant degree. See, for example, the various alternative smoking articles, aerosol delivery devices and heat generating sources set forth in the background art described in U.S. Pat. No. 7,726,320 to Robinson et al., U.S. patent application Ser. No. 13/432,406, filed Mar. 28, 2012, U.S. patent application Ser. No. 13/536,438, filed Jun. 28, 2012, U.S. patent application Ser. No. 13/602,871, filed Sep. 4, 2012, and U.S. patent application Ser. No. 13/647,000, filed Oct. 8, 2012, which are incorporated herein by reference.

[0003] Certain tobacco products that have employed electrical energy to produce heat for smoke or aerosol formation, and in particular, certain products that have been referred to as electronic cigarette products, have been commercially available throughout the world. Representative products that resemble many of the attributes of traditional types of cigarettes, cigars or pipes have been marketed as ACCORD® by Philip Morris Incorporated; ALPHA™, JOYE 510™ and M4™ by InnoVapor LLC; CIRRUS™ and FLIIG™ by White Cloud Cigarettes; COHITAT™, COLIBRI™, ELITE CLASSIC™, MAGNUM™, PHANTOM™ and SENSE™ by Epuffer® International Inc.; DUOPRO™, STORM™ and VAPORKING® by Electronic Cigarettes, Inc.; EGAR™ by Egar Australia; eGo-C™ and eGo-T™ by Joyetech; ELUSION™ by Elusion UK Ltd; EONSMOKE® by Eonsmoke LLC; GREEN SMOKE® by Green Smoke Inc. USA; GREENARETTE™ by Greenarette LLC; HALLIGAN™, HENDU™, JET™, MAXXQ™, PINK™ and PITBULL™ by Smoke Stik®; HEATBAR™ by Philip Morris International, Inc.; HYDRO IMPERIAL™ and LXE™ from Crown7; LOGIC™ and THE CUBAN™ by LOGIC Technology; LUCI® by Luciano Smokes Inc.; METRO® by Nicotek, LLC; NJOY® and ONEJOY™ by Sottera, Inc.; NO. 7™ by SS Choice LLC; PREMIUM ELECTRONIC CIGARETTE™ by PremiumEstore LLC; RAPP E-MYSTICK™ by Ruyan America, Inc.; RED DRAGON™ by Red Dragon Products, LLC; RUYAN® by Ruyan Group (Holdings) Ltd.; SMART SMOKER® by The Smart Smoking Electronic Cigarette Company Ltd.; SMOKE ASSIST® by Coastline Products LLC; SMOKING EVERYWHERE® by Smoking Everywhere, Inc.; V2CIGS™ by VMR Products LLC; VAPOR NINE™ by VaporNine LLC; VAPOR4LIFE® by Vapor 4 Life, Inc.; VEPPO™ by E-CigaretteDirect, LLC and VUSE® by R. J. Reynolds Vapor Company. Yet other electrically powered aerosol delivery devices, and in particular those devices that have been characterized as so-called electronic cigarettes, have been marketed under the tradenames BLU™; COOLER VISIONS™; DIRECT E-CIG™; DRAGONFLY™; EMIST™; EVERSMOKE™; GAMUCCI®; HYBRID FLAME™; KNIGHT STICKS™; ROYAL BLUES™; SMOKETIP® and SOUTH BEACH SMOKE™.

[0004] It would be desirable to provide an aerosol delivery device that employs heat produced by electrical energy to provide the sensations of cigarette, cigar, or pipe smoking, that does so without combusting tobacco to any significant degree, that does so without the need of a combustion heat source, and that does so without necessarily delivering considerable quantities of incomplete combustion and pyrolysis products. Further, it would be desirable to provide an aerosol delivery device that employs convenient releasable engagement between a control body and a cartridge thereof.

BRIEF SUMMARY OF THE DISCLOSURE

[0005] In one aspect a cartridge for an aerosol delivery device is provided. The cartridge may include a reservoir substrate configured to hold an aerosol precursor composition, an atomizer configured to atomize the aerosol precursor, and a base extending between a body end oriented toward the reservoir substrate and the atomizer and a connector end configured to releasably engage a control body. The base may include an anti-rotation mechanism at the connector end configured to prevent rotation of the cartridge relative to the control body when engaged therewith.

[0006] In some embodiments the anti-rotation mechanism may include a plurality of protrusions and a plurality of recesses alternatingly disposed about an inner periphery of the base. A width of each of the protrusions may increase from the connector end toward the body end and a width of each of the recesses may decrease from the connector end toward the body end. The cartridge may additionally include a plurality of ribs extending from the inner periphery of the base at the recesses. A radial dimension of the inner periphery of the base may decrease from the connector end toward the body end. The base may further include a groove extending at least partially around the inner periphery thereof.

[0007] In an additional aspect a control body for an aerosol delivery device is provided. The control body may include a control component, an electrical power source, and a coupler extending between a body end oriented toward the control component and the electrical power source and a connector end configured to releasably engage a cartridge. The coupler may include an anti-rotation mechanism at the connector end configured to prevent rotation of the control body relative to the cartridge when engaged therewith.

[0008] In some embodiments the anti-rotation mechanism may include a plurality of protrusions and a plurality of recesses alternatingly disposed about an outer periphery of the coupler. A width of each of the protrusions may increase from the connector end toward the body end, and a width of each of the recesses may decrease from the connector end

toward the body end. A radial dimension of the outer periphery of the coupler may increase from the connector end toward the body end. The coupler may additionally include a circumferential protrusion extending at least partially around the outer periphery thereof.

[0009] In a further aspect an aerosol delivery device is provided. The aerosol delivery device may include a control body. The control body may include a control component, an electrical power source, a coupler extending between a body end oriented toward the control component and the electrical power source and a connector end comprising an anti-rotation mechanism. The aerosol delivery device may additionally include a cartridge. The cartridge may include a reservoir substrate configured to hold an aerosol precursor composition, an atomizer configured to atomize the aerosol precursor, and a base extending between a body end oriented toward the reservoir substrate and the atomizer and a connector end configured to releasably engage the control body. The connector end of the base may include an anti-rotation mechanism configured to engage the anti-rotation mechanism of the coupler of the control body to prevent rotation of the cartridge relative to the control body when engaged therewith.

[0010] In some embodiments the anti-rotation mechanism of the base may include a plurality of protrusions and a plurality of recesses alternatingly disposed about an inner periphery thereof and the anti-rotation mechanism of the coupler may include a plurality of protrusions and a plurality of recesses alternatingly disposed about an outer periphery thereof. A width of each of the protrusions of the base and the protrusions of the coupler may respectively increase from the connector end toward the body end and a width of each of the recesses of the base and the recesses of the coupler may respectively decrease from the connector end toward the body end. The base may further include a plurality of ribs extending from the inner periphery thereof at the recesses. A radial dimension of the inner periphery of the base may decrease from the connector end toward the body end and a radial dimension of the outer periphery of the coupler may increase from the connector end toward the body end. The base may further include a groove extending at least partially around the inner periphery thereof and the coupler may additionally include a circumferential protrusion extending at least partially around the outer periphery thereof.

[0011] In another aspect a method for forming an aerosol delivery device is provided. The method may include providing a control body and a coupler, which may respectively include some or all of the features described above. Further the method may include engaging the connector end of the base to the connector end of the coupler such that the cartridge releasably engages the control body and the anti-rotation mechanism of the control body engages the anti-rotation mechanism of the cartridge to substantially prevent rotation of the cartridge relative to the control body. In some embodiments engaging the connector end of the base to the connector end of the coupler may include engaging a plurality of protrusions and a plurality of recesses alternatingly disposed about an inner periphery of the base of the cartridge with a plurality of protrusions and a plurality of recesses alternatingly disposed about an outer periphery of the control body. In some embodiments engaging the connector end of the base to the connector end of the coupler may additionally include engaging a plurality of ribs extending from the inner periphery of the base at the recesses with the protrusions of the control body. Engaging the connector end of the base to the connector end of the coupler may further include engaging a circumferential protrusion extending at least partially around the outer periphery of the coupler with a groove extending at least partially around the inner periphery of the base.

BRIEF DESCRIPTION OF THE FIGURES

[0012] Having thus described the disclosure in the foregoing general terms, reference will now be made to the accompanying drawings, which are not necessarily drawn to scale, and wherein:

[0013] FIG. **1** illustrates a sectional view through an aerosol delivery device comprising a control body and a cartridge including an atomizer according to an example embodiment of the present disclosure;

[0014] FIG. **2** illustrates an exploded view of a control body of an aerosol delivery device according to an example embodiment of the present disclosure;

[0015] FIG. **3** illustrates the control body of FIG. **2** in a partially assembled configuration with an adhesive member and an outer tube removed for clarity purposes;

[0016] FIG. **4** illustrates the control body of FIG. **2** in a partially assembled configuration with outer tube removed for clarity purposes;

[0017] FIG. **5** illustrates the control body of FIG. **2** in an assembled configuration;

[0018] FIG. **6** illustrates a partially exploded view of an aerosol delivery device including the control body of FIG. **2** in the assembled configuration and a cartridge in an exploded configuration, the cartridge comprising a base shipping plug, a base, a control component terminal, an electronic control component, a flow tube, an atomizer, a reservoir substrate, an external shell, a label, a mouthpiece, and a mouthpiece shipping plug according to an example embodiment of the present disclosure;

[0019] FIG. **7** illustrates an enlarged exploded view of the base and the control component terminal of the cartridge of FIG. **6**;

[0020] FIG. **8** illustrates an enlarged perspective view of the base and the control component terminal of FIG. **6** in an assembled configuration;

[0021] FIG. **9** illustrates an enlarged perspective view of the base, the control component terminal, the electronic control component, and heater terminals of the atomizer of FIG. **6** in an assembled configuration;

[0022] FIG. **10** illustrates an enlarged perspective view of the base, the atomizer, and the control component of FIG. **6** in an assembled configuration;

[0023] FIG. **11** illustrates an opposing perspective view of the assembly of FIG. **10**;

[0024] FIG. **12** illustrates an enlarged perspective view of the base, the atomizer, the flow tube, and the reservoir substrate of FIG. **6** in an assembled configuration;

[0025] FIG. **13** illustrates a perspective view of the base and the external shell of FIG. **6** in an assembled configuration;

[0026] FIG. **14** illustrates a perspective view of the cartridge of FIG. **6** in an assembled configuration;

[0027] FIG. **15** illustrates a first partial perspective view of the cartridge of FIG. **6** and a coupler for a control body according to an example embodiment of the present disclosure;

[0028] FIG. **16** illustrates an opposing second partial perspective view of the cartridge of FIG. **6** and the coupler of FIG. **15**;

NJOY Exhibit 1013.021

[0029] FIG. **17** illustrates a perspective view of a cartridge including a base with an anti-rotation mechanism according to an additional example embodiment of the present disclosure;

[0030] FIG. **18** illustrates a perspective view of a control body including a coupler with an anti-rotation mechanism according to an additional example embodiment of the present disclosure;

[0031] FIG. **19** illustrates alignment of the cartridge of FIG. **17** with the control body of FIG. **18**;

[0032] FIG. **20** illustrates an aerosol delivery device comprising the cartridge of FIG. **17** and the control body of FIG. **18** with a modified view through the aerosol delivery device illustrating the engagement of the anti-rotation mechanism of the cartridge with the anti-rotation mechanism of the connector body;

[0033] FIG. **21** illustrates a perspective view of a base with an anti-rotation mechanism according to an additional example embodiment of the present disclosure;

[0034] FIG. **22** illustrates a perspective view of a coupler with an anti-rotation mechanism according to an additional example embodiment of the present disclosure;

[0035] FIG. **23** illustrates a sectional view through the base of FIG. **21** and the coupler of FIG. **22** in an engaged configuration;

[0036] FIG. **24** illustrates an adaptor according to an example embodiment of the present disclosure;

[0037] FIG. **25** illustrates a method for forming an aerosol delivery device according to an example embodiment of the present disclosure; and

[0038] FIG. **26** illustrates a cross-sectional view through a funneled mouthpiece according to an example embodiment of the present disclosure.

DETAILED DESCRIPTION OF PREFERRED EMBODIMENTS

[0039] The present disclosure will now be described more fully hereinafter with reference to exemplary embodiments thereof. These exemplary embodiments are described so that this disclosure will be thorough and complete, and will fully convey the scope of the disclosure to those skilled in the art. Indeed, the disclosure may be embodied in many different forms and should not be construed as limited to the embodiments set forth herein; rather, these embodiments are provided so that this disclosure will satisfy applicable legal requirements. As used in the specification, and in the appended claims, the singular forms "a", "an", "the", include plural referents unless the context clearly dictates otherwise.

[0040] The present disclosure provides descriptions of aerosol delivery devices that use electrical energy to heat a material (preferably without combusting the material to any significant degree) to form an inhalable substance; such articles most preferably being sufficiently compact to be considered "hand-held" devices. In certain highly preferred embodiments, the aerosol delivery devices can be characterized as smoking articles. As used herein, the term "smoking article" is intended to mean an article or device that provides some or all of the sensations (e.g., inhalation and exhalation rituals, types of tastes or flavors, organoleptic effects, physical feel, use rituals, visual cues such as those provided by visible aerosol, and the like) of smoking a cigarette, cigar, or pipe, without any substantial degree of combustion of any component of that article or device. As used herein, the term "smoking article" does not necessarily mean that, in operation, the article or device produces smoke in the sense of the aerosol resulting from by-products of combustion or pyrolysis of tobacco, but rather, that the article or device yields vapors (including vapors within aerosols that can be considered to be visible aerosols that might be considered to be described as smoke-like) resulting from volatilization or vaporization of certain components of the article or device. In highly preferred embodiments, articles or devices characterized as smoking articles incorporate tobacco and/or components derived from tobacco.

[0041] Articles or devices of the present disclosure also can be characterized as being vapor-producing articles, aerosol delivery articles or medicament delivery articles. Thus, such articles or devices can be adapted so as to provide one or more substances (e.g., flavors and/or pharmaceutical active ingredients) in an inhalable form or state. For example, inhalable substances can be substantially in the form of a vapor (i.e., a substance that is in the gas phase at a temperature lower than its critical point). Alternatively, inhalable substances can be in the form of an aerosol (i.e., a suspension of fine solid particles or liquid droplets in a gas). For purposes of simplicity, the term "aerosol" as used herein is meant to include vapors, gases and aerosols of a form or type suitable for human inhalation, whether or not visible, and whether or not of a form that might be considered to be smoke-like.

[0042] In use, smoking articles of the present disclosure may be subjected to many of the physical actions employed by an individual in using a traditional type of smoking article (e.g., a cigarette, cigar or pipe that is employed by lighting and inhaling tobacco). For example, the user of a smoking article of the present disclosure can hold that article much like a traditional type of smoking article, draw on one end of that article for inhalation of aerosol produced by that article, take puffs at selected intervals of time, etc.

[0043] Smoking articles of the present disclosure generally include a number of components provided within an outer shell or body. The overall design of the outer shell or body can vary, and the format or configuration of the outer body that can define the overall size and shape of the smoking article can vary. Typically, an elongated body resembling the shape of a cigarette or cigar can be a formed from a single, unitary shell; or the elongated body can be formed of two or more separable pieces. For example, a smoking article can comprise an elongated shell or body that can be substantially tubular in shape and, as such, resemble the shape of a conventional cigarette or cigar. In one embodiment, all of the components of the smoking article are contained within one outer body or shell. Alternatively, a smoking article can comprise two or more shells that are joined and are separable. For example, a smoking article can possess at one end a control body comprising a shell containing one or more reusable components (e.g., a rechargeable battery and various electronics for controlling the operation of that article), and at the other end and removably attached thereto a shell containing a disposable portion (e.g., a disposable flavor-containing cartridge). More specific formats, configurations and arrangements of components within the single shell type of unit or within a multi-piece separable shell type of unit will be evident in light of the further disclosure provided herein. Additionally, various smoking article designs and component arrangements can be appreciated upon consideration of the commercially available electronic smoking articles, such as those representative products listed in the background art section of the present disclosure.

[0044] Smoking articles of the present disclosure most preferably comprise some combination of a power source (i.e., an electrical power source), at least one control component (e.g., means for actuating, controlling, regulating and ceasing power for heat generation, such as by controlling electrical current flow the power source to other components of the article), a heater or heat generation component (e.g., an electrical resistance heating element or component commonly referred to as an "atomizer"), and an aerosol precursor composition (e.g., commonly a liquid capable of yielding an aerosol upon application of sufficient heat, such as ingredients commonly referred to as "smoke juice," "e-liquid" and "e-juice"), and a mouthend region or tip for allowing draw upon the smoking article for aerosol inhalation (e.g., a defined air flow path through the article such that aerosol generated can be withdrawn therefrom upon draw). Exemplary formulations for aerosol precursor materials that may be used according to the present disclosure are described in U.S. Pat. Pub. No. 2013/0008457 to Zheng et al., the disclosure of which is incorporated herein by reference in its entirety.

[0045] Alignment of the components within the article can vary. In specific embodiments, the aerosol precursor composition can be located near an end of the article (e.g., within a cartridge, which in certain circumstances can be replaceable and disposable), which may be is proximal to the mouth of a user so as to maximize aerosol delivery to the user. Other configurations, however, are not excluded. Generally, the heating element can be positioned sufficiently near the aerosol precursor composition so that heat from the heating element can volatilize the aerosol precursor (as well as one or more flavorants, medicaments, or the like that may likewise be provided for delivery to a user) and form an aerosol for delivery to the user. When the heating element heats the aerosol precursor composition, an aerosol is formed, released, or generated in a physical form suitable for inhalation by a consumer. It should be noted that the foregoing terms are meant to be interchangeable such that reference to release, releasing, releases, or released includes form or generate, forming or generating, forms or generates, and formed or generated. Specifically, an inhalable substance is released in the form of a vapor or aerosol or mixture thereof. Additionally, the selection of various smoking article components can be appreciated upon consideration of the commercially available electronic smoking articles, such as those representative products listed in the background art section of the present disclosure.

[0046] A smoking article incorporates a battery or other electrical power source to provide current flow sufficient to provide various functionalities to the article, such as resistive heating, powering of control systems, powering of indicators, and the like. The power source can take on various embodiments. Preferably, the power source is able to deliver sufficient power to rapidly heat the heating member to provide for aerosol formation and power the article through use for the desired duration of time. The power source preferably is sized to fit conveniently within the article so that the article can be easily handled; and additionally, a preferred power source is of a sufficiently light weight to not detract from a desirable smoking experience.

[0047] One example embodiment of a smoking article **100** is provided in FIG. **1**. As seen in the cross-section illustrated therein, the smoking article **100** can comprise a control body **102** and a cartridge **104** that can be permanently or detachably aligned in a functioning relationship. Although a threaded engagement is illustrated in FIG. **1**, it is understood that further means of engagement are encompassed, such as a press-fit engagement, interference fit, a magnetic engagement, or the like.

[0048] In specific embodiments, one or both of the control body **102** and the cartridge **104** may be referred to as being disposable or as being reusable. For example, the control body may have a replaceable battery or a rechargeable battery and thus may be combined with any type of recharging technology, including connection to a typical electrical outlet, connection to a car charger (i.e., cigarette lighter receptacle), and connection to a computer, such as through a universal serial bus (USB) cable.

[0049] In the exemplified embodiment, the control body **102** includes a control component **106**, a flow sensor **108**, and a battery **110**, which can be variably aligned, and can include a plurality of indicators **112** at a distal end **114** of an external shell **116**. The indicators **112** can be provided in varying numbers and can take on different shapes and can even be an opening in the body (such as for release of sound when such indicators are present).

[0050] An air intake **118** may be positioned in the external shell **116** of the control body **102**. A coupler **120** also is included at the proximal attachment end **122** of the control body **102** and extends into a control body projection **124** to allow for ease of electrical connection with an atomizer or a component thereof, such as a resistive heating element (described below) when the cartridge **104** is attached to the control body.

[0051] The cartridge **104** includes an external shell **126** with a mouth opening **128** at a mouthend **130** thereof to allow passage of air and entrained vapor (i.e., the components of the aerosol precursor composition in an inhalable form) from the cartridge to a consumer during draw on the smoking article **100**. The smoking article **100** may be substantially rod-like or substantially tubular shaped or substantially cylindrically shaped in some embodiments.

[0052] The cartridge **104** further includes an atomizer **132** comprising a resistive heating element **134** comprising a wire coil in the illustrated embodiment and a liquid transport element **136** comprising a wick in the illustrated embodiment and configured to transport a liquid. Various embodiments of materials configured to produce heat when electrical current is applied therethrough may be employed to form the wire coil. Example materials from which the wire coil may be formed include Kanthal (FeCrAl), Nichrome, Molybdenum disilicide ($MoSi_2$), molybdenum silicide (MoSi), Molybdenum disilicide doped with Aluminum ($Mo(Si,Al)_2$), and ceramic (e.g., a positive temperature coefficient ceramic). Electrically conductive heater terminals **138** (e.g., positive and negative terminals) at the opposing ends of the heating element **134** are configured to direct current flow through the heating element and configured for attachment to the appropriate wiring or circuit (not illustrated) to form an electrical connection of the heating element with the battery **110** when the cartridge **104** is connected to the control body **102**. Specifically, a plug **140** may be positioned at a distal attachment end **142** of the cartridge **104**. When the cartridge **104** is connected to the control body **102**, the plug **140** engages the coupler **120** to form an electrical connection such that current controllably flows from the battery **110**, through the coupler and plug, and to the heating element **134**. The external shell **126** of the cartridge **104** can continue across the distal attach-

NJOY Exhibit 1013.023

ment end **142** such that this end of the cartridge is substantially closed with the plug **140** protruding therefrom.

[0053] A reservoir may utilize a liquid transport element to transport an aerosol precursor composition to an aerosolization zone. One such example is shown in FIG. **1**. As seen therein, the cartridge **104** includes a reservoir layer **144** comprising layers of nonwoven fibers formed into the shape of a tube encircling the interior of the external shell **126** of the cartridge, in this embodiment. An aerosol precursor composition is retained in the reservoir layer **144**. Liquid components, for example, can be sorptively retained by the reservoir layer **144**. The reservoir layer **144** is in fluid connection with a liquid transport element **136** (the wick in this embodiment). The liquid transport element **136** transports the aerosol precursor composition stored in the reservoir layer **144** via capillary action to an aerosolization zone **146** of the cartridge **104**. As illustrated, the liquid transport element **136** is in direct contact with the heating element **134** that is in the form of a metal wire coil in this embodiment.

[0054] In use, when a user draws on the article **100**, the heating element **134** is activated (e.g., such as via a puff sensor), and the components for the aerosol precursor composition are vaporized in the aerosolization zone **146**. Drawing upon the mouthend **130** of the article **100** causes ambient air to enter the air intake **118** and pass through the central opening in the coupler **120** and the central opening in the plug **140**. In the cartridge **104**, the drawn air passes through an air passage **148** in an air passage tube **150** and combines with the formed vapor in the aerosolization zone **146** to form an aerosol. The aerosol is whisked away from the aerosolization zone **146**, passes through an air passage **152** in an air passage tube **154**, and out the mouth opening **128** in the mouthend **130** of the article **100**.

[0055] It is understood that a smoking article that can be manufactured according to the present disclosure can encompass a variety of combinations of components useful in forming an electronic smoking article. Reference is made for example to the smoking articles disclosed in U.S. patent application Ser. No. 13/536,438, filed Jun. 28, 2012, U.S. patent application Ser. No. 13/432,406, filed Mar. 28, 2012, U.S. patent application Ser. No. 13/602,871, filed Sep. 4, 2012, the disclosures of which are incorporated herein by reference in their entirety. Further to the above, representative heating elements and materials for use therein are described in U.S. Pat. No. 5,060,671 to Counts et al.; U.S. Pat. No. 5,093,894 to Deevi et al.; U.S. Pat. No. 5,224,498 to Deevi et al.; U.S. Pat. No. 5,228,460 to Sprinkel Jr., et al.; U.S. Pat. No. 5,322,075 to Deevi et al.; U.S. Pat. No. 5,353,813 to Deevi et al.; U.S. Pat. No. 5,468,936 to Deevi et al.; U.S. Pat. No. 5,498,850 to Das; U.S. Pat. No. 5,659,656 to Das; U.S. Pat. No. 5,498,855 to Deevi et al.; U.S. Pat. No. 5,530,225 to Hajaligol; U.S. Pat. No. 5,665,262 to Hajaligol; U.S. Pat. No. 5,573,692 to Das et al.; and U.S. Pat. No. 5,591,368 to Fleischhauer et al., the disclosures of which are incorporated herein by reference in their entireties. Further, a single-use cartridge for use with an electronic smoking article is disclosed in U.S. patent application Ser. No. 13/603,612, filed Sep. 5, 2012, which is incorporated herein by reference in its entirety.

[0056] The various components of a smoking article according to the present disclosure can be chosen from components described in the art and commercially available. Examples of batteries that can be used according to the disclosure are described in U.S. Pat. App. Pub. No. 2010/0028766, the disclosure of which is incorporated herein by reference in its entirety.

[0057] An exemplary mechanism that can provide puff-actuation capability includes a Model 163PC01D36 silicon sensor, manufactured by the MicroSwitch division of Honeywell, Inc., Freeport, Ill. Further examples of demand-operated electrical switches that may be employed in a heating circuit according to the present disclosure are described in U.S. Pat. No. 4,735,217 to Gerth et al., which is incorporated herein by reference in its entirety. Further description of current regulating circuits and other control components, including microcontrollers that can be useful in the present smoking article, are provided in U.S. Pat. Nos. 4,922,901, 4,947,874, and 4,947,875, all to Brooks et al., U.S. Pat. No. 5,372,148 to McCafferty et al., U.S. Pat. No. 6,040,560 to Fleischhauer et al., and U.S. Pat. No. 7,040,314 to Nguyen et al., all of which are incorporated herein by reference in their entireties.

[0058] The aerosol precursor, which may also be referred to as an aerosol precursor composition or a vapor precursor composition, can comprise one or more different components. For example, the aerosol precursor can include a polyhydric alcohol (e.g., glycerin, propylene glycol, or a mixture thereof). Representative types of further aerosol precursor compositions are set forth in U.S. Pat. No. 4,793,365 to Sensabaugh, Jr. et al.; U.S. Pat. No. 5,101,839 to Jakob et al.; PCT WO 98/57556 to Biggs et al.; and Chemical and Biological Studies on New Cigarette Prototypes that Heat Instead of Burn Tobacco, R. J. Reynolds Tobacco Company Monograph (1988); the disclosures of which are incorporated herein by reference.

[0059] Still further components can be utilized in the smoking article of the present disclosure. For example, U.S. Pat. No. 5,261,424 to Sprinkel, Jr. discloses piezoelectric sensors that can be associated with the mouth-end of a device to detect user lip activity associated with taking a draw and then trigger heating; U.S. Pat. No. 5,372,148 to McCafferty et al. discloses a puff sensor for controlling energy flow into a heating load array in response to pressure drop through a mouthpiece; U.S. Pat. No. 5,967,148 to Harris et al. discloses receptacles in a smoking device that include an identifier that detects a non-uniformity in infrared transmissivity of an inserted component and a controller that executes a detection routine as the component is inserted into the receptacle; U.S. Pat. No. 6,040,560 to Fleischhauer et al. describes a defined executable power cycle with multiple differential phases; U.S. Pat. No. 5,934,289 to Watkins et al. discloses photonic-optronic components; U.S. Pat. No. 5,954,979 to Counts et al. discloses means for altering draw resistance through a smoking device; U.S. Pat. No. 6,803,545 to Blake et al. discloses specific battery configurations for use in smoking devices; U.S. Pat. No. 7,293,565 to Griffen et al. discloses various charging systems for use with smoking devices; U.S. Pat. App. Pub. No. 2009/0320863 by Fernando et al. discloses computer interfacing means for smoking devices to facilitate charging and allow computer control of the device; U.S. Pat. App. Pub. No. 2010/0163063 by Fernando et al. discloses identification systems for smoking devices; and WO 2010/003480 by Flick discloses a fluid flow sensing system indicative of a puff in an aerosol generating system; all of the foregoing disclosures being incorporated herein by reference in their entireties. Further examples of components related to electronic aerosol delivery articles and disclosing materials or components that may be used in the present article include U.S. Pat. No.

4,735,217 to Gerth et al.; U.S. Pat. No. 5,249,586 to Morgan et al.; U.S. Pat. No. 5,666,977 to Higgins et al.; U.S. Pat. No. 6,053,176 to Adams et al.; U.S. Pat. No. 6,164,287 to White; U.S. Pat. No. 6,196,218 to Voges; U.S. Pat. No. 6,810,883 to Felter et al.; U.S. Pat. No. 6,854,461 to Nichols; U.S. Pat. No. 7,832,410 to Hon; U.S. Pat. No. 7,513,253 to Kobayashi; U.S. Pat. No. 7,896,006 to Hamano; U.S. Pat. No. 6,772,756 to Shayan; U.S. Pat. No. 8,156,944 to Hon; U.S. Pat. App. Pub. Nos. 2006/0196518, 2009/0126745, and 2009/0188490 to Hon; U.S. Pat. App. Pub. No. 2009/0272379 to Thorens et al.; U.S. Pat. App. Pub. Nos. 2009/0260641 and 2009/0260642 to Monsees et al.; U.S. Pat. App. Pub. Nos. 2008/0149118 and 2010/0024834 to Oglesby et al.; U.S. Pat. App. Pub. No. 2010/0307518 to Wang; and WO 2010/091593 to Hon. A variety of the materials disclosed by the foregoing documents may be incorporated into the present devices in various embodiments, and all of the foregoing disclosures are incorporated herein by reference in their entireties.

[0060] FIG. **2** illustrates an exploded view of a control body **200** for an aerosol delivery device according to an example embodiment of the present disclosure. The components of the control body **200** are described only briefly below due to the description of the control body illustrated in FIG. **1** being applicable to the components of the control body illustrated in FIG. **2**. As illustrated, the control body **200** may comprise a coupler **202**, a sealing member **204**, an adhesive member **206** (e.g., KAPTON® tape), a flow sensor **220**, a control component **208**, a spacer **210**, an electrical power source **212** (e.g., a battery), a circuit board with a light emitting diode (LED) component **222**, a connector circuit **224**, an outer tube **214**, and an end cap **216**.

[0061] The coupler **202** may include control body terminals **218** extending therefrom which may extend through the sealing member **204** and engage one or both of the control component **208** and the electrical power source **212**. The control component **208** may be a printed circuit board including a microcontroller. The flow sensor **220** may be coupled to the control component **208** or may be a separate element. The LED component **222** can be in communication with the control component **208** through the connector circuit **224** and illuminate, for example, during a user drawing on a cartridge coupled to the coupler **202**, as detected by the flow sensor **220**. The end cap **216** may be adapted to make visible the LED illumination thereunder provided by the LED component **222**.

[0062] FIGS. **3-5** illustrate the control body **202** in various states of assembly. More particularly, FIG. **3** illustrates the control body **200** with the adhesive member **206** and the outer tube **214** removed for clarity purposes. FIG. **4** illustrates the control body **200** with the outer tube **214** removed for clarity purposes. FIG. **5** illustrates the control body in a fully-assembled configuration.

[0063] FIG. **6** illustrates a partially exploded view of an aerosol delivery device **300** including the control body **200** of FIGS. **2-5** in the assembled configuration and a cartridge **400** in an exploded configuration. As illustrated, the cartridge **400** may comprise a base shipping plug **402**, a base **404**, a control component terminal **406**, an electronic control component **408**, a flow tube **410**, an atomizer **412**, a reservoir substrate **414**, an external shell **416**, a label **418**, a mouthpiece **420**, and a mouthpiece shipping plug **422** according to an example embodiment of the present disclosure. Note that the various embodiments of components described above in the cited references and/or included in commercially available aerosol delivery devices may be employed in embodiments of the cartridges described herein. Note further that some of the portions of the cartridge **400** illustrated in FIG. **6** are optional. In this regard, by way of example, the cartridge **400** may not include the flow tube **410**, the control component terminal **406**, and/or the electronic control component **408** in some embodiments.

[0064] In one embodiment the electronic control component **408** may comprise a single-piece printed circuit board assembly. The electronic control component **408** may include a ceramic substrate, which may comprise about 96% alumina ceramic in one embodiment. This material is inorganic, non-reactive, non-degrading, and non-porous. Use of such a ceramic material may be preferable in that it may define a robust, dimensionally-stable part without requiring a separate supporting structure. Further, such a ceramic material may allow for adhesion of a coating thereto. For example, a component side of the electronic control component **408** may comprise a chloro-substituted poly (para-xylylene) commercially available as Parylene C from Specialty Coating Systems, Inc., or any other coating or other sealant/barrier coating configured to protect components of the circuit board from liquid and moisture. The sealant/barrier coating may also provide the electronic control component **408** with a decreased coefficient of friction, which may facilitate an axial assembly process of the cartridge **400**.

[0065] FIG. **7** illustrates an enlarged exploded view of the base **404** and the control component terminal **406**. The control component terminal **406** may define a clip **424** configured to engage the electronic control component **408** and form an electrical connection therewith. Further, the control component terminal **406** may include one or more protrusions **426*a***, **426*b*** configured to engage the base **404**, for example via interference fit, such that the control component terminal **406** is retained in engagement therewith. An end **428** of the control component terminal **406** may be configured to engage a control body, so as to establish an electrical connection therewith.

[0066] As illustrated, the base **404** may define a receptacle **430** configured to receive the control component terminal **406** therein. In this regard, as illustrated in FIG. **8**, the control component terminal **406** may couple to the base **404**. For example, the control component terminal **406** may be retained in the receptacle **430** of the base **404** via interference fit, for example due to contact between the protrusions **426*a***, **426*b*** and the base. The control component terminal **406** may extend through the base **404** to a position at which it may form an electrical connection with the control body **200** to which the cartridge **400** connects. Further, the base **404** may define threads or protrusions **432** configured to engage the external shell **416**.

[0067] As illustrated in FIG. **9**, the control component terminal **406** may couple to the electronic control component **408** such that an electrical connection is established therebetween. Accordingly, when the cartridge **400** is coupled to the control body **200**, the electronic control component **408** may communicate therewith through the control component terminal **406**. The electronic control component **408** may be configured to perform one or more of a variety of functions. Further, the electronic control component **408** may be configured as purpose-specific analog and/or digital circuitry with or without a processor, or the electronic control component may comprise hardware, software, or a combination of hardware and software. Accordingly, any or all of the functions performed by or in conjunction with the electronic con-

trol component **408** may be embodied in a computer-readable storage medium having computer-readable program code portions stored therein that, in response to execution by a processor, cause an apparatus to at least perform or direct the recited functions. In one particular instance, upon establishment of communication between the electronic control component **408** and the control body **200**, the electronic control component may be configured to provide an authentication code or other appropriate indicia to the control body. In such instances, the control body **200** may be configured to evaluate the authentication indicia to determine whether the cartridge **400** is authorized for use with the control body. However, the electronic control component **408** may perform various other functions. Various examples of electronic control components and functions performed thereby are described in U.S. patent application Ser. No. 13/647,000, filed Oct. 8, 2012, which is incorporated herein by reference in its entirety.

[0068] As further illustrated in FIG. **9**, a first heater terminal **434***a* and a second heater terminal **434***b* (collectively, "heater terminals **434**"), which may comprise portions of the atomizer **412**, may couple to a body end **435** of the base. Note that the base **404'** illustrated in FIGS. **9** and **10** differs slightly from the embodiment of the base **404** described above. For example, the protrusions **432'** define a differing configuration than the protrusions **432** described above. However, the protrusions **432'** and other features of the base **404'** perform substantially the same function in substantially the same manner. Accordingly, the base **404'** is provided for purposes of illustrating an alternate embodiment only.

[0069] The heater terminals **434** may define a plurality of walls, which may extend at least partially around the electronic control component **408** in some embodiments such that the electronic control component is received therebetween. This configuration may allow the heater terminals **434** to provide support to the electronic control component **408**, for example by contact therewith, such that the electronic control component is securely retained in place. Further, the heater terminals **434** may define first and second tabs **436***a*, **436***b* (collectively, "tabs **436**"). The tabs **436** may be positioned at the end of the heater terminals **434** distal to the base **404'**. In some embodiments the heater terminals **434** may be stamped or otherwise formed from a sheet of a metal material. However, the heater terminals **434** may be formed in various other manners and formed from any of a variety of conductive materials.

[0070] FIG. **10** illustrates the completed atomizer **412** coupled to the base **404'** via the heater terminals **434**. As illustrated in FIG. **10**, in addition to the heater terminals **434**, the atomizer **412** may further comprise a liquid transport element **438** and a heating element **440**. The liquid transport element **438** and the heating element **440** may be configured in a substantially U-shaped configuration. The liquid transport element **438**, which may comprise a wick (e.g., a fiberglass wick) in some embodiments, may be either preformed in the U-shaped configuration or bent to define this configuration. A first distal arm **442***a* and a second distal arm **442***b* (collectively, "distal arms **442**") of the liquid transport element **438** may respectively extend along the first and second heater terminals **434***a*, **434***b*. Further a center section **442***c* of the liquid transport element **438** may extend between the heater terminals **434**.

[0071] The liquid transport element **438** may comprise a bundle of fibers, such as fiberglass. In some embodiments, the liquid transport element **438** may comprise a braid of four or more fibers or yarns and thus define a braided wick. The liquid transport element **438** may be in the form of a sheath/core element. In particular, the sheath of the wick may be a braided wick as described above. The core of the wick may be a bundle of fibers, particularly twisted fibers. The liquid transport element specifically may comprise one or both of E-glass and C-glass.

[0072] The heating element **440** extends at least partially about the liquid transport element **438** and at least partially along the length of the liquid transport element. In some embodiments the heating element may terminate at the heater terminals **434** between which the heating element extends. However, in the illustrated embodiment the heating element **440** extends along substantially the entirety of the length of the liquid transport element **438**.

[0073] In some embodiments, the heating element **440** may comprise a wire defining a plurality of coils wound about the liquid transport element **438**, as illustrated in FIG. **10**. The wire may comprise a material configured to produce heat when electrical current is provided therethrough. For example, the wire may comprise Kanthal (FeCrAl), Nichrome, Molybdenum disilicide ($MoSi_2$), molybdenum silicide (MoSi), Molybdenum disilicide doped with Aluminum ($Mo(Si,Al)_2$), or ceramic (e.g., a positive temperature coefficient ceramic) in some embodiments, although various other materials may be employed in other embodiments. In some embodiments the heating element **440** may be formed by winding the wire about the liquid transport element **438** as described in U.S. patent application Ser. No. 13/708,381, filed Dec. 7, 2012, which is incorporated herein by reference in its entirety. However, various other embodiments of methods may be employed to form the heating element **440**, and various other embodiments of heating elements may be employed in the atomizer **208**.

[0074] The tabs **436** may be configured to contact the heating element **440** such that an electrical connection is established therebetween. In this regard, the tabs **436** may be configured to be positioned adjacent to the heating element **440** such that the tabs directly contact one or more coils of the wire. Direct contact, as used herein, refers to physical contact between the heating element **440** and the heater terminals **434**. However, direct contact, as used herein, also encompasses embodiments in which one or more welds couple the heating element **440** and the heater terminals **434**. A weld, as used herein, refers to a solder, flux, braze, or other material that is deposited in liquid or molten form and hardens to form a connection. For example, a laser may be directed at a back side of the tabs **436**, opposite from the heating element **440**, which may weld the heating element to the tabs in order to provide for a connection therebetween.

[0075] As further illustrated in FIG. **10**, in one embodiment the heating element **440** may define a variable coil spacing. The spacing of the coils may be the smallest proximate the tabs **436**, greatest at the distal arms **442**, and in between the spacing of the coils at the tabs and the distal arms between the heater terminals **434**. By decreasing the spacing between the coils of the heating element **440** proximate the tabs **436**, contact therebetween may be improved. The spacing of the coils of the heating element **440** between the tabs **436** may be selected to define a desired resistance and/or produce a desired amount of heat. Further, the spacing of the coils of the heating element **440** on the distal arms **442** of the liquid

transport element **438** may be relatively large in order to decrease material costs associated with production of the heating element.

[0076] As noted above, the electronic control component **408** may be received between the heater terminals **434** and the distal arms **442** of the liquid transport element **438**, which extend along the heater terminals. However, a gap **444** may be provided between the electronic control component **408** and the heating element **440**. The gap **444** may reduce the amount of heat transferred to the electronic control component **408** from the heating element **440**, for example by preventing direct conduction therebetween. Accordingly, the risk of damage to the electronic control component **408** from exposure to heat produced by the heating element **440** may be reduced.

[0077] FIG. **11** illustrates an alternative perspective view of the assembly illustrated in FIG. **10**, with the base **404'** replaced with the base **404** for purposes of illustrating use of an alternate embodiment of a base. In particular, FIG. **11** illustrates a view of a connector end **446** of the base **404** configured to releasably engage the control body **200**. As illustrated, a central opening **448** may be defined in the base **202**. The central opening **448** may be configured to receive airflow therethrough from the control body **200** and direct the airflow toward the heating element **440** of the atomizer **412**.

[0078] The heater terminals **434** may engage the base **404** and respectively extend to a first end **450***a* and a second end **450***b* (collectively, "ends **450**"), which may be configured to engage the control body **200**, so as to establish an electrical connection therewith. In this regard, as illustrated in FIG. **11**, the end **428** of the control component terminal **406** and the ends **450** of the heater terminals **434** may be exposed at the connector end **446** of the base **404**. The end **428** of the control component terminal **406** and the ends **450** of the heater terminals **434** may be located at differing positions within the base **404** such that they make connections with components at different locations within the control body, and avoid unintended contact therebetween.

[0079] In this regard, the end **428** of the control component terminal **406** and the ends **450** of the heater terminals **434** may be located at differing radial distances from the central opening **448**. In the illustrated embodiment, the end **428** of the control component terminal **406** is located closest to the central opening **448**, the first end **450***a* of the first heater terminal **434***a* is located farthest from the central opening, and the second end **450***b* of the first heater terminal **434***b* is located at a radial distance therebetween. Further, the end **428** of the control component terminal **406** and the ends **450** of the heater terminals **434** may extend to a plurality of different depths within the base **404**. In the illustrated embodiment, the end **428** of the control component terminal **406** extends through the base **404** to a greatest depth, the first end **450***a* of the first heater terminal **434***a* extends through the base to the smallest depth, and the second end **450***b* of the second heater terminal **434***b* extends through the base to a depth therebetween.

[0080] FIG. **12** illustrates a perspective view of the assembly of FIG. **11** after the reservoir substrate **414** is coupled thereto. The reservoir substrate **414** may be configured to hold an aerosol precursor composition. The aerosol precursor composition may comprise a variety of components including, by way of example, glycerin, nicotine, tobacco, tobacco extract, and/or flavorants. Various components that may be included in the aerosol precursor composition are described in U.S. Pat. No. 7,726,320 to Robinson et al., which is incorporated herein by reference.

[0081] The reservoir substrate **414** may define a cavity **452** extending therethrough from a first reservoir end **454***a* to a second reservoir end **454***b* (collectively, "reservoir ends **454**"), wherein the first reservoir end is positioned proximate the base **404**. In this regard, the reservoir substrate **414** may define a hollow tubular configuration. Note that although generally described herein as defining a hollow tubular configuration, the reservoir substrate **414** may define other shapes and configurations in other embodiments. The aerosol precursor composition may be retained within the material defining the reservoir substrate **414** itself, as opposed to within the cavity **452**. This configuration may allow for airflow through the base **404**, into and through the cavity **452**, and past the heating element **440**.

[0082] The reservoir substrate **414** can comprise one or more of various materials and can be formed in a variety of different manners. In one embodiment the reservoir substrate **414** can be formed from a plurality of combined layers that can be concentric or overlapping. For example, the reservoir substrate **414** can be a continuous sheet of a material that is rolled such that the ends thereof meet along a joint **456** to form the hollow tubular configuration, or multiple layers of the material may be wrapped thereabout. In other embodiments, the reservoir substrate **414** can be substantially a unitary component. For example, the reservoir substrate **414** can be shaped or molded so as to be a singular preformed element in the form of a substantially hollow tube, which may be substantially continuous in composition across the length and thickness thereof.

[0083] The reservoir substrate **414** can be formed from a material that is rigid or semi-rigid in some embodiments, while retaining the ability to store a liquid product such as, for example, an aerosol precursor composition. In certain embodiments, the material of the reservoir substrate **414** can be absorbent, adsorbent, or otherwise porous so as to provide the ability to retain the aerosol precursor composition. As such, the aerosol precursor composition can be characterized as being coated on, adsorbed by, or absorbed in the material of the reservoir substrate **414**. The reservoir substrate **414** can be positioned within the cartridge **400** such that the reservoir substrate is in contact with the liquid transport element **438**. More particularly, the reservoir substrate **414** can be manufactured from any material suitable for retaining the aerosol precursor composition (e.g., through absorption, adsorption, or the like) and allowing wicking away of the precursor composition for transport to the heating element **440**.

[0084] The material of the reservoir substrate **414** may be suitable for forming and maintaining an appropriate shape. The material of the reservoir substrate **414** can be heat resistant so as to retain its structural integrity and avoid degradation at least at a temperature proximal to the heating temperature provided by the heating element **440**. However, the reservoir substrate **414** need not be heat resistant to the full temperature produced by the heating element **440** due to the reservoir substrate being out of contact therewith. The size and strength of the reservoir substrate **414** may vary according to the features and requirements of the cartridge **400**. In particular embodiments, the reservoir substrate **414** can be manufactured from a material suitable for a high-speed, automated manufacturing process. The reservoir substrate **414** may be a molded piece. According to one embodiment, the

NJOY Exhibit 1013.027

reservoir can be manufactured from a cellulose acetate tow which can be processed to form a hollow acetate tube. In particular, the reservoir may be a woven or non-woven fibrous mat comprising cellulose acetate and, optionally, a binder and/or fibers formed of a different material.

[0085] In certain embodiments, the reservoir substrate **414** can be provided in a form such that at least part of the cavity **452** is shaped and dimensioned to accommodate one or more other components of the cartridge **400**. In some embodiments, the term "shaped and dimensioned" can indicate that a wall of the reservoir substrate **414** at the cavity **452** includes one or more indentations or protrusions that cause the interior of the reservoir substrate to have a shape that is other than substantially smooth and continuous. In other embodiments, the hollow nature of the reservoir substrate **414** can be sufficient to allow for accommodation of further components of the cartridge **400** without the need for formation of cavities or protrusions. Thus, the cartridge **400** can be particularly beneficial in that the reservoir substrate **414** can be pre-formed and can have a hollow interior defining the cavity **452** with a wall that is shaped and dimensioned to accommodate a further component of the cartridge in a mating arrangement. For example, the atomizer may define grooves configured to receive the atomizer. This particularly can facilitate ease of assembly of the cartridge **400** and can maximize the volume of the reservoir substrate **414** while also providing sufficient space for aerosol formation. However, in other embodiments the atomizer may define a substantially smooth interior surface and/or conform to the shape of the components which the atomizer contacts.

[0086] As illustrated in FIG. **12**, the atomizer **412** may extend through the cavity **452** of the reservoir substrate **414** such that the heating element **440** is positioned proximate the second reservoir end **454***b*. More particularly, the atomizer **412** may extend through the cavity **452** such that the heating element **440** is positioned past the second reservoir end **454***b* and outside of the cavity. This embodiment may reduce the heat directly applied by the heating element **440** to the reservoir substrate **414** such that the amount of the aerosol precursor composition vaporized by the heating element is controlled in part by the flow of the aerosol precursor composition through the liquid transport element **438** to the heating element. Accordingly, the amount of aerosol precursor composition vaporized may be more precisely controlled. However, in other embodiments, it is not necessary for the atomizer to extend beyond the second reservoir end, and the atomizer can be positioned relative to the reservoir substrate such that the heating element is received within the cavity of the reservoir substrate.

[0087] As illustrated in FIGS. **6** and **12**, in some embodiments the cartridge may additionally include a flow tube **410**. As illustrated in FIG. **12**, the flow tube **410** may be positioned between, and held in place by, the terminals **434**. More particularly, the flow tube **410** may define first **458***a* and second **458***b* opposing grooves (collectively, "grooves **458**"). The grooves **458** may be sized and shaped to respectively receive one of the terminals **434** therein. In this regard, in some embodiments the flow tube **410** may define a generally round outer perimeter, with the exception of the grooves **458**. Thus, the flow tube **410** may be received inside the cavity defined through the reservoir substrate **410**. Accordingly, the flow tube **410** may additionally or alternatively be held in place by the reservoir substrate **410**. The flow tube **410** may also be held in place via contact with the electronic control component **408** in some embodiments.

[0088] The flow tube **410** may be configured to direct a flow of air received from the central opening **448** (see, e.g., FIG. **11**) in the base **404** to the heating element **440** of the atomizer **412**. More particularly, as illustrated in FIG. **12**, the flow tube **410** may define a through hole **460** configured to receive air from the central opening **448** in the base **404** and direct it to the heating element **440**. Accordingly, the size of the through hole **460** may be selected to define a desired velocity of air directed to the heating element **440**. Accordingly, a desired amount of aerosol may be delivered to the air as the air passes the heating element **440**. For example, the through hole **460** may taper from a relatively larger diameter to a relatively smaller diameter proximate the heating element **440**. However, in other embodiments the through hole **490** may define a substantially constant diameter.

[0089] In some embodiments the flow tube **410** may comprise a ceramic material. For example, the flow tube **410** may comprise 96.5% aluminum trioxide in one embodiment. This material may provide heat resistance which may be desirable due to proximity to the heating element **440**. However, the flow tube **410** may be formed from various other materials in other embodiments.

[0090] The reservoir substrate **414** includes an exterior surface **462** that can be substantially shaped and adapted to conform to an interior surface **464** of the external shell **416** (see, FIG. **13**). In this regard, the external shell **416** may define a tubular shape with a cavity **466** extending therethrough sized to receive the reservoir substrate **414**. For example, an inner radius of the external shell **416** may substantially correspond to, or may be slightly larger than, an outer radius of the reservoir substrate **414**. Accordingly, the external shell **416** may be received over the reservoir substrate **414** and coupled to the base **404**, as illustrated in FIG. **13**. One or more indentations **468** may engage the threads or protrusions **432** on the base **404** such that coupling is retained therebetween.

[0091] As illustrated in FIG. **14**, the external shell **416** may couple to the mouthpiece **420** such that the cavity **466** defined by the external shell is at least partially enclosed. More particularly, in one embodiment one or more indentations **470** may engage threads or protrusions **472** on the mouthpiece **420** (see, FIG. **6**) such that coupling therebetween is retained. The mouthpiece **420** defines one or more openings **474** through which air mixed with aerosol produced by the atomizer **412** may be directed when a user draws on the mouthpiece, as described in accordance with the above-noted example embodiments of smoking articles. The mouthpiece shipping plug **422** (see, FIG. **6**) may engage one or more of the openings **474** such as a center opening **474***a* prior to use of the cartridge **400** in order to prevent entry of contaminants through the openings **474** in the mouthpiece **420**.

[0092] FIGS. **15** and **16** illustrate an enlarged view of the coupler **202**, which may comprise a portion of the control body **200**, aligned with the cartridge **400**. The coupler **202** may be configured to engage the base **404** of the cartridge **400** and various other embodiments of cartridges as described herein. As illustrated, the coupler **202** may comprise protrusions or threads **224** that are configured to engage the outer tube **214** of the control body **200** such that a mechanical connection is formed therebetween.

[0093] The coupler **202** may define an outer periphery **226** configured to mate with an inner periphery **476** of the base **404**. In one embodiment the inner periphery **476** of the base

NJOY Exhibit 1013.028

404 may define a radius that is substantially equal to, or slightly greater than, a radius of the outer periphery **226** of the coupler **202**. Further, the coupler **202** may define one or more protrusions **228** at the outer periphery **226** configured to engage one or more recesses **478** defined at the inner periphery **476** of the base **404**. However, various other embodiments of structures, shapes, and components may be employed to couple the base **404** to the coupler **202**. In some embodiments the connection between the base **404** of the cartridge **400** and the coupler **202** of the control body **200** may be substantially permanent, whereas in other embodiments the connection therebetween may be releasable such that, for example, the control body may be reused with one or more additional cartridges.

[0094] The coupler **202** may further comprise a plurality of electrical contacts **230***a-c* respectively configured to contact the end **428** of the control component terminal **406** and the ends **450** of the heater terminals **434**. The electrical contacts **230***a-c* may be positioned at differing radial distances from a central opening **232** through the coupler **202** and positioned at differing depths within the coupler. The depth and radius of each of the electrical contacts **230***a-c* is configured such that the end **428** of the control component terminal **406** and the ends **450** of the heater terminals **434** respectively come into contact therewith when the base **404** and the coupler **202** are joined together to establish an electrical connection therebetween. More particularly, in the illustrated embodiment, a first electrical contact **230***a* defines the smallest diameter, a third electrical contact **230***c* defines the greatest diameter, and a second electrical contact **230***b* defines a diameter therebetween. Further, the electrical contacts **230***a-c* are located at differing depths within the connector **202** relative to a connector end thereof. In the illustrated embodiment, the first electrical contact **230***a* is located at a greatest depth, the third electrical contract **230***c* is located at the smallest depth, and the second electrical contact **230***b* is located at a depth therebetween. The first electrical contact **230***a* may be configured to contact the end **428** of the control component terminal **406**, the second electrical contact **230***b* may be configured to contact the second end **450***b* of the second heater terminal **434***b*, and the first end **450***a* of the first heater terminal **450***a* may be configured to contact the third electrical contact **230***c*.

[0095] In the illustrated embodiment the electrical contacts **230***a-c* comprise circular metal bands of varying radii positioned at differing depths within the coupler **202** as described above. In one embodiment the bands may comprise continuous round rings. In another embodiment, the bands may comprise a sheet of metal material that is wound into the circular configuration and defines a joint where the ends thereof meet. In some embodiments the joint between the ends of each band of metal material may be configured at opposing non-perpendicular angles relative to a longitudinal length of the metal material defining the bands. Thereby, the ends of the band may meet at a joint that does not extend parallel to a central axis extending through the coupler **202**. This configuration may be preferable in that it avoids creating a joint extending parallel to the central axis through the coupler **202**, which could form a poor connection with an end of one of the heater terminals or the control component terminal when in contact therewith. Each of the bands defines a major contact surface facing radially inwardly toward the central axis of the coupler **202**. The bands defining the electrical contacts **230***a-c* are separated from one another by stepped surfaces of the body of the coupler **202**, which may be oriented perpendicularly to the radially facing major surfaces of the electrical contacts.

[0096] When the electrical contacts **230***a-c* comprise circular bands and the end **428** of the control component terminal **406** and the ends **450** of the heater terminals **434** extend to corresponding depths and radii within the base **404**, electrical connections between the base and the coupler **202** may be established regardless of the rotational orientation of the base with respect to the coupler. Accordingly, connection between the base **404** of the cartridge **400** and the coupler **202** of the control body may be facilitated. The electrical contacts **230***a-c* may be respectively coupled to a plurality of control body terminals **218***a-c* that connect to a plurality of components within the control body **200** such as the electrical power source **212** and the control component **208** therefor. In contrast, existing embodiments of aerosol delivery devices may employ electrical contacts in the threads of the connectors. Such connectors may be subject to wear from use, due to the rotation contact therebetween necessarily occurring when the connectors are threaded together.

[0097] Further, when the base **404** of the cartridge **400** and the coupler **202** of the control body **200** are coupled together, a fluid connection may also be established. In this regard, the coupler **202** may define a fluid pathway configured to receive air from an ambient environment and direct the air to the cartridge **400** when a user draws thereon. More particularly, in one embodiment the coupler **202** may define a rim **234** with a radially extending notch **236** defined therein. Further a longitudinally extending recessed slot **238** may extend from the notch **236** to an opening **240**. The opening **240** may define a cutout or a hole through a portion of the coupler in some embodiments. Thus, when the coupler **202** is engaged with the end of the outer body **214** of the control body **200**, the fluid pathway through the notch **236**, the slot **238**, and the opening **240** may remain open. Air drawn through this path may then be directed through the central opening **232** of the coupler **202** and the central opening **448** of the base **404** when the coupler and the base are connected to one another. Thus, air may be directed from the control body **200** through the cartridge **400** in the manner described above when a user draws on the mouthpiece **420** of the cartridge.

[0098] Accordingly, the above-described cartridge **400** may provide benefits in terms of ease of assembly and ease of attachment to the coupler **202** of the control body **200**. In particular, with respect to the cartridge **400**, assembly thereof may be simplified in that the components thereof may be generally axially assembled. More specifically, in one embodiment the control component terminal **406** may be coupled to the base **404**, the electronic control component **408** may be coupled to the control component terminal, the heater terminals **434** may be coupled to the base, the flow tube **410** may be coupled to the heater terminals and the electronic control component, the heating element **440** may be coupled to the liquid transport element **438** and the combination thereof may be coupled to the heater terminals to form the atomizer **412**, the reservoir substrate **414** may be coupled to the atomizer, the external shell **416** may be coupled to the base, and the mouthpiece **420** may be coupled to the external shell. The label **418** (see, FIG. **6**) may be coupled to the external shell **416** in some embodiments. Further, the base shipping plug **402** (see, FIG. **6**) may be coupled to the inner periphery **476** of the base **404** in some embodiments to protect the base during transport and storage.

[0099] Although FIGS. **15** and **16** illustrate embodiments of a base and a coupler for a cartridge and a control body, various other embodiments of these components may be provided. In this regard, FIG. **17** illustrates a cartridge **500**, which may comprise some or all of the cartridge components described above, and an alternate embodiment of a base **502**. The base **502** may extend between a body end **504** oriented toward components of the cartridge **500** such as a reservoir substrate and an atomizer, and a connector end **506** configured to releasably engage a control body. The base **502** may include some of the features and components described above, including, for example, the end **428** of a control component terminal, the end of the heater terminals **450**, and the central opening **448** extending therethrough.

[0100] The base **502** may further comprise an anti-rotation mechanism **508** at the connector end **506**. The anti-rotation mechanism **508** may be configured to prevent rotation of the cartridge **500** relative to a control body when engaged therewith. In contrast, some prior art embodiments of cartridges may rely on threaded connections to mate with corresponding control bodies. However, the potential for cross-threading therebetween exists, which may damage one or both of the control body and the cartridge. Further, users may prefer a connection between a cartridge and a control body that feels substantially permanent. In this regard, the anti-rotation mechanism **508** may be employed to provide a connection between the cartridge **500** and a control body that feels secure and permanent to an end user despite the releasability thereof. Additionally, prevention of rotation may reduce wear on the electrical contacts in the control body.

[0101] As illustrated in FIG. **17**, the anti-rotation mechanism **508** may comprise a plurality of protrusions **510** and a plurality of recesses **512** alternatingly disposed about an inner periphery **514** of the base **502**. As further illustrated in FIG. **17**, a width of each of the protrusions **510** may increase from the connector end **506** toward the body end **504** of the base **502**. Conversely, a width of each of the recesses **512** may decrease from the connector end **506** toward the body end **504** of the base **502**. The base **502** may further comprise a plurality of ribs **516** extending from the inner periphery **514** of the base **500** at the recesses **512**, the purpose of which will be described below.

[0102] FIG. **18** illustrates a control body **600**, which may comprise some or all of the control body components described above, and an alternate embodiment of a coupler **602**. The coupler **602** may extend between a body end **604** oriented toward components of the control body **600** such as a control component and an electrical power source, and a connector end **606** configured to releasably engage a cartridge. The coupler **602** may include some of the features and components described above, including, for example, the electrical contacts **230***a-c*, and the central opening **232**.

[0103] The coupler **602** may further comprise an anti-rotation mechanism **608** at the connector end **606**. The anti-rotation mechanism **608** may be configured to prevent rotation of the control body **600** relative to a cartridge when engaged therewith. In contrast, some prior art embodiments of control bodies rely on threaded connections to mate with corresponding cartridges. However, as noted above, the potential for cross-threading therebetween exists, which may damage one or both of the control body and the cartridge and users may prefer a connection between a cartridge and a control body that feels substantially permanent. In this regard, the anti-rotation mechanism **608** may be employed to provide a connection between the control body **600** and a cartridge that feels secure and permanent to an end user despite the releasability thereof, and which may reduce wear on electrical contacts of the coupler caused by rotation between the cartridge and the control body.

[0104] As illustrated in FIG. **18**, the anti-rotation mechanism **608** may comprise a plurality of protrusions **610** and a plurality of recesses **612** alternatingly disposed about an outer periphery **614** of the coupler **602**. As further illustrated in FIG. **18**, a width of each of the protrusions **610** may increase from the connector end **606** toward the body end **604** of the coupler **602**. Conversely, a width of each of the recesses **512** may decrease from the connector end **606** toward the body end **604** of the coupler **602**.

[0105] The base **502** of the cartridge **500** illustrated in FIG. **17** may be configured to engage the coupler **602** of the control body **600** illustrated in FIG. **18**. In this regard, FIG. **19** illustrates an alignment of the base **502** and the coupler **602** which may be employed during coupling between the cartridge **500** and the control body **600**. As illustrated, the cartridge **500** may be axially aligned with the control body **600**.

[0106] During coupling of the cartridge **500** to the control body **600**, the outer periphery **614** of the coupler **602** may engage the inner periphery **514** of the base **502**. Accordingly, the protrusions **510** and the recesses **512** of the base **502** may engage the recesses **612** and the protrusions **610** of the coupler **602**. Initially, when a user axially aligns the cartridge **500** and the control body **600**, the protrusions **610** of the coupler **602** may not be aligned with the recesses **512** of the base **502** and the recesses **612** of the coupler may not be aligned with the protrusions **510** of the base.

[0107] As noted above, the widths of the protrusions **510**, **610** may increase extending away from the respective connector ends **506**, **606**. Further, the widths of the recesses **610**, **612** may decrease in width extending away from the respective connector ends **506**, **606**. Accordingly, even if protrusions **512** of the base **502** initially contact the protrusions **612** of the coupler **602**, the protrusions may deflect from one another and enter respective recesses **512**, **612**.

[0108] FIG. **20** illustrates an aerosol delivery device **700** comprising the cartridge **500** and the control body **600**. More particularly, FIG. **20** includes a modified view through the aerosol delivery device **700** illustrating the engagement of the anti-rotation mechanism **508** of the cartridge **500** with the anti-rotation mechanism **608** of the connector body **600**. As illustrated, in some embodiments a radial dimension of the inner periphery **514** of the base **502** decreases from the connector end **506** toward the body end **504**. Conversely, a radial dimension of the outer periphery **614** of the coupler **602** increases from the connector end **606** toward the body end **604**. Changes in the radial dimensions of the inner periphery **514** of the base **502** and the outer periphery **614** of the coupler **602** as described above may facilitate alignment and attachment of the cartridge **500** to the control body **600**. However, in other embodiments the inner periphery **514** of the base **502** and the outer periphery **614** of the coupler **602** may define substantially constant radial dimensions extending from the respective connector end **506**, **606** toward the respective body end **504**, **604**.

[0109] When brought into contact in the manner described above, the base **502** of the cartridge **500** may engage the coupler **602** of the control body **600** to form the aerosol delivery device **700**, as illustrated in FIG. **20**. Further, the anti-rotation mechanisms **508**, **608** may engage one another

NJOY Exhibit 1013.030

such that relative rotational motion between the cartridge **500** and the control body **600** is substantially prevented. In particular, engagement between the edges of the protrusions **512**, **612** may substantially prevent rotational movement between the cartridge **500** and the control body **600**.

[0110] Further, during connection of the cartridge **500** to the control body **600**, tips **616** of the protrusions **610** of the coupler **602** may engage the ribs **516** extending from the inner periphery **514** of the base **500** at the recesses **512**. In one embodiment the ribs **516** may be wedge-shaped and extend further toward the center of the base **502** at an end thereof closest to the body end **504** of the base. Accordingly, as the coupler **602** extends into the base **502**, the ribs **516** may deform due to contact with the tips **616** of the protrusions **610** of the coupler **602**. For example, in one embodiment the base **502** may be formed from a material that is softer than a material defining the coupler **602**. Alternatively or additionally, contact between the ribs **516** and the tips **616** of the protrusions **610** of the coupler **602** may center the control body **602** with respect to the base **502**. Accordingly, the ribs **516** may improve the connection between the cartridge **500** and the control body **600**.

[0111] In some embodiments, as illustrated in FIGS. **17**, **19**, and **20**, the base **502** may further comprise a groove **518** extending at least partially around the inner periphery **514** thereof. Additionally, the coupler **602** may further comprise one or more circumferential protrusions **618** extending at least partially around the outer periphery thereof. The circumferential protrusions **618** may engage the groove **518** in the base such that the base **502** is releasably engaged with the coupler **602**. Accordingly, the cartridge **500** and the control body **600** may "snap" into releasable engagement. The cartridge **500** may be decoupled from the control body **600** by grasping both the cartridge and the control body and pulling the cartridge and the control body axially away from one another. In contrast, use of a threaded connection, as may be employed in other embodiments of aerosol delivery devices, may require unthreading the cartridge from the control body, which may take more time, and the strength required to decouple the cartridge from the control body may vary depending on how tight the cartridge was initially screwed to the control body, resulting in an inconsistent user experience.

[0112] Note that in other embodiments the anti-rotation mechanism of the cartridge may be positioned at an outer surface thereof. Conversely, the anti-rotation mechanism of the control body may be positioned at an inner surface thereof. Accordingly, it should be understood that the particular embodiment of the cartridge and the control body described herein is provided by way of example only, and various other configurations may be employed.

[0113] Other embodiments of bases and couplers configured to engage one another that include anti-rotation mechanisms are also provided. By way of example, FIGS. **21** and **22** respectively illustrate embodiments of a base **802** and a coupler **902** configured to engage one another. The base **802** may comprise a portion of a cartridge and the coupler **902** may comprise a portion of a control body as described above.

[0114] In this regard, the base **802** illustrated in FIG. **21** may comprise some or all of the components described above. The base **802** may extend between a body end **804** configured to be oriented toward other components of a cartridge such as a reservoir substrate and an atomizer, and a connector end **806** configured to releasably engage a control body. Further, the base **802** may include a central opening **448** and a groove **518** as described above. Although the base **802** is illustrated in isolation, the base may also include a control component terminal and heater terminals extending therethrough when assembled with additional components of a cartridge. The base **802** may further comprise an anti-rotation mechanism **808** at the connector end **806**. The anti-rotation mechanism **808** may be configured to prevent rotation of a cartridge relative to a control body when engaged therewith.

[0115] The coupler **902** illustrated in FIG. **22** may comprise some of the components of the couplers described above, including, for example, the electrical contacts **230***a-c*, the central opening **232**, and the control body terminals **218**. The coupler **902** may extend between a body end **904** configured to be oriented toward components of a control body such as a control component and an electrical power source, and a connector end **906** configured to releasably engage a cartridge. The coupler **902** may further comprise an anti-rotation mechanism **908** at the connector end **906**. The anti-rotation mechanism **908** may be configured to prevent rotation of a control body relative to a cartridge when engaged therewith.

[0116] More particularly, the anti-rotation mechanism **808** of the base **802** may comprise a plurality of protrusions **810** (e.g., prongs) and the coupler **902** may include a plurality of recesses **912** configured to receive the protrusions. As illustrated, the protrusions **810** and the recesses **912** may respectively at least partially surround the central openings **448**, **232** through the base **802** and the coupler **902**. In one embodiment, as illustrated, the coupler **902** may include more recesses **912** than protrusions **810** defined by the base. Accordingly, the recesses **912** of the coupler **902** may be configured to receive the protrusions **810** of the base in multiple rotational configurations. In another embodiment the prongs **810** and the recesses **912** may be spaced apart from one another at differing distances such that the base **802** and the coupler **902** are keyed to join in one or more of a limited number of defined rotational orientations.

[0117] FIG. **23** illustrates the base **802** engaged with the coupler **902**. As illustrated, when the base **802** is engaged with the coupler **902**, the protrusions **810** may extend into the recesses **912**. Thus, engagement between the protrusions **810** and the recesses **912** may substantially prevent rotation of the base **802** relative to the coupler **902**.

[0118] Accordingly, FIGS. **21-23** illustrate alternate embodiments of anti-rotation mechanisms that may be employed with embodiments of cartridges, control bodies, and aerosol delivery devices according to embodiments of the present disclosure. However, as noted above, various other embodiments of anti-rotation mechanisms are also provided. For example, the protrusions may extend from the coupler and the recesses may be provided in the base in an alternate embodiment. Further, it should be understood that the features and components of the various embodiments of components described herein may be combined in a variety of manners. Thus, the various features and components described herein are illustrated in separate features merely for example purposes.

[0119] As briefly noted above, in some embodiments the control bodies described herein may be rechargeable. In this regard, FIG. **24** illustrates an embodiment of an adaptor **1000**. The adaptor **1000** may include a USB connector **1002** at one end and a control body connector **1004** at an opposing end. The control body connector **1004** may be configured to match the shape of a base of a cartridge to which a control body is configured to engage. Thus, when the USB connector **1002** of

the adaptor **1000** is plugged into an appropriate receptacle and the control body connector **1004** is plugged into a control body, the electrical power source (e.g., a battery) of the control body may be charged.

[0120] A method for forming an aerosol delivery device is also provided. As illustrated in FIG. **2**, the method may comprise providing a control body at operation **1102**. In some embodiments the control body may comprise a control component, an electrical power source, a coupler extending between a body end oriented toward the control component and the electrical power source and a connector end comprising an anti-rotation mechanism, and/or any other components as described herein. Further, the method may include providing a cartridge at operation **1104**. In some embodiments the cartridge may comprise a reservoir substrate configured to hold an aerosol precursor composition, an atomizer configured to atomize the aerosol precursor, a base extending between a body end oriented toward the reservoir substrate and the atomizer and a connector end comprising an anti-rotation mechanism, and/or any other components as described herein. Additionally, the method may include engaging the connector end of the base to the connector end of the coupler such that the cartridge releasably engages the control body and the anti-rotation mechanism of the control body engages the anti-rotation mechanism of the cartridge to substantially prevent rotation of the cartridge relative to the control body at operation **1106**.

[0121] In some embodiments of the method, engaging the connector end of the base to the connector end of the coupler at operation **1106** may comprise engaging a plurality of protrusions and a plurality of recesses alternatingly disposed about an inner periphery of the base of the cartridge with a plurality of protrusions and a plurality of recesses alternatingly disposed about an outer periphery of the control body. Engaging the connector end of the base to the connector end of the coupler at operation **1106** may further comprise engaging a plurality of ribs extending from the inner periphery of the base at the recesses with the protrusions of the control body. Additionally, engaging the connector end of the base to the connector end of the coupler at operation **1106** may further comprise engaging a circumferential protrusion extending at least partially around the outer periphery of the coupler with a groove extending at least partially around the inner periphery of the base.

[0122] FIG. **26** illustrates a cross-sectional view through an additional example embodiment of a mouthpiece **1200** for a cartridge. The mouthpiece **1200** may include one or more protrusions **1202** configured to engage an external shell or outer body of a cartridge such that the mouthpiece is coupled therewith. The mouthpiece **1200** may include one or more openings through which a user may draw air mixed with aerosol produced by an atomizer when a user draws on the mouthpiece. In this regard, the illustrated embodiment of the mouthpiece **1200** includes a single central external opening **1204** defining by through hole.

[0123] As illustrated, the mouthpiece **1200** defines a funnel section **1206** in communication with the external opening **1204**. The funnel section **1206** may be defined by an integral interior surface of the mouthpiece **1200** in some embodiments, as illustrated. More specifically, the funnel section **1206** extends from a major end **1208** to a minor end **1210**, wherein the minor end defines a smaller cross-sectional area than the major end. The minor end **1210** of the funnel section **1206** may be positioned proximate the external opening **1204**. Accordingly, air drawn through the mouthpiece **1200** may enter through the major end **1208** of the funnel section **1206**, travel to the minor end **1210** of the funnel section, and exit to a user's mouth through the external opening **1204**. In some embodiments a lip **1212** may be defined at the minor end **1210** of the funnel section **1206**. The lip **1212** and the funnel section **1206** are configured to improve airflow through a cartridge to which the mouthpiece **1200** is attached by reducing eddy currents occurring downstream of the heating element. In this regard, although not intending to be limited by any particular theory, the lip **1212** and/or the funnel section **1206** may function as a velocity stack. Note that the mouthpiece **1200** may be employed in any of the embodiments of cartridges disclosed herein.

[0124] Many modifications and other embodiments of the disclosure will come to mind to one skilled in the art to which this disclosure pertains having the benefit of the teachings presented in the foregoing descriptions and the associated drawings. Therefore, it is to be understood that the disclosure is not to be limited to the specific embodiments disclosed herein and that modifications and other embodiments are intended to be included within the scope of the appended claims. Although specific terms are employed herein, they are used in a generic and descriptive sense only and not for purposes of limitation.

1. A cartridge for an aerosol delivery device, the cartridge comprising:

a reservoir substrate configured to hold an aerosol precursor composition;

an atomizer configured to atomize the aerosol precursor; and

a base extending between a body end oriented toward the reservoir substrate and the atomizer and a connector end configured to releasably engage a control body, the base comprising an anti-rotation mechanism at the connector end configured to prevent rotation of the cartridge relative to the control body when engaged therewith.

2. The cartridge of claim **1**, wherein the anti-rotation mechanism comprises a plurality of protrusions and a plurality of recesses alternatingly disposed about an inner periphery of the base.

3. The cartridge of claim **2**, wherein a width of each of the protrusions increases from the connector end toward the body end and a width of each of the recesses decreases from the connector end toward the body end.

4. The cartridge of claim **2**, further comprising a plurality of ribs extending from the inner periphery of the base at the recesses.

5. The cartridge of claim **2**, wherein a radial dimension of the inner periphery of the base decreases from the connector end toward the body end.

6. The cartridge of claim **2**, wherein the base further comprises a groove extending at least partially around the inner periphery thereof.

7. A control body for an aerosol delivery device, the control body comprising:

a control component;

an electrical power source; and

a coupler extending between a body end oriented toward the control component and the electrical power source and a connector end configured to releasably engage a cartridge, the coupler comprising an anti-rotation

mechanism at the connector end configured to prevent rotation of the control body relative to the cartridge when engaged therewith.

8. The control body of claim **7**, wherein the anti-rotation mechanism comprises a plurality of protrusions and a plurality of recesses alternatingly disposed about an outer periphery of the coupler.

9. The control body of claim **8**, wherein a width of each of the protrusions increases from the connector end toward the body end and a width of each of the recesses decreases from the connector end toward the body end.

10. The control body of claim **8**, wherein a radial dimension of the outer periphery of the coupler increases from the connector end toward the body end.

11. The control body of claim **8**, wherein the coupler further comprises a circumferential protrusion extending at least partially around the outer periphery thereof.

12. An aerosol delivery device, comprising:

a control body comprising:

a control component;

an electrical power source; and

a coupler extending between a body end oriented toward the control component and the electrical power source and a connector end comprising an anti-rotation mechanism; and

a cartridge comprising:

a reservoir substrate configured to hold an aerosol precursor composition;

an atomizer configured to atomize the aerosol precursor; and

a base extending between a body end oriented toward the reservoir substrate and the atomizer and a connector end configured to releasably engage the control body, the connector end of the base comprising an anti-rotation mechanism configured to engage the anti-rotation mechanism of the coupler of the control body to prevent rotation of the cartridge relative to the control body when engaged therewith.

13. The aerosol delivery device of claim **12**, wherein the anti-rotation mechanism of the base comprises a plurality of protrusions and a plurality of recesses alternatingly disposed about an inner periphery thereof and the anti-rotation mechanism of the coupler comprises a plurality of protrusions and a plurality of recesses alternatingly disposed about an outer periphery thereof.

14. The aerosol delivery device of claim **13**, wherein a width of each of the protrusions of the base and the protrusions of the coupler increases from the connector end toward the body end and a width of each of the recesses of the base and the recesses of the coupler respectively decreases from the connector end toward the body end.

15. The aerosol delivery device of claim **13**, wherein the base further comprises a plurality of ribs extending from the inner periphery thereof at the recesses.

16. The aerosol delivery device of claim **13**, wherein a radial dimension of the inner periphery of the base decreases from the connector end toward the body end and a radial dimension of the outer periphery of the coupler increases from the connector end toward the body end.

17. The aerosol delivery device of claim **13**, wherein the base further comprises a groove extending at least partially around the inner periphery thereof and the coupler further comprises a circumferential protrusion extending at least partially around the outer periphery thereof.

18. A method for forming an aerosol delivery device, the method comprising:

providing a control body comprising:

a control component;

an electrical power source; and

a coupler extending between a body end oriented toward the control component and the electrical power source and a connector end comprising an anti-rotation mechanism; and

providing a cartridge comprising:

a reservoir substrate configured to hold an aerosol precursor composition;

an atomizer configured to atomize the aerosol precursor; and

a base extending between a body end oriented toward the reservoir substrate and the atomizer and a connector end comprising an anti-rotation mechanism; and

engaging the connector end of the base to the connector end of the coupler such that the cartridge releasably engages the control body and the anti-rotation mechanism of the control body engages the anti-rotation mechanism of the cartridge to substantially prevent rotation of the cartridge relative to the control body.

19. The method of claim **18**, wherein engaging the connector end of the base to the connector end of the coupler comprises engaging a plurality of protrusions and a plurality of recesses alternatingly disposed about an inner periphery of the base of the cartridge with a plurality of protrusions and a plurality of recesses alternatingly disposed about an outer periphery of the control body.

20. The method of claim **19**, wherein engaging the connector end of the base to the connector end of the coupler further comprises engaging a plurality of ribs extending from the inner periphery of the base at the recesses with the protrusions of the control body.

21. The method of claim **19**, wherein engaging the connector end of the base to the connector end of the coupler further comprises engaging a circumferential protrusion extending at, least partially around the outer periphery of the coupler with a groove extending at least partially around the inner periphery of the base.

* * * * *