MS5637-02BA03 Low Voltage Barometric Pressure Sensor

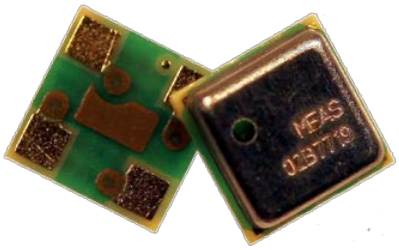

- **QFN package 3 x 3 x 0.9 mm^3**
- **High-resolution module, 13 cm**
- **Supply voltage: 1.5 to 3.6 V**
- **Fast conversion down to 0.5 ms**
- **Low power, 0.6 µA (standby ≤ 0.1 µA at 25°C)**
- **Integrated digital pressure sensor (24 bit ΔΣ ADC)**
- **Operating range: 300 to 1200 mbar, -40 to +85 °C**
- **I^{2}C interface**
- **No external components (internal oscillator)**

DESCRIPTION

The MS5637 is an ultra-compact micro altimeter. It is optimized for altimeter and barometer applications in Smart-phones and Tablet PCs. The altitude resolution at sea level is 13 cm of air. The sensor module includes a high-linearity pressure sensor and an ultra-low power 24 bit ΔΣ ADC with internal factory-calibrated coefficients. It provides a precise digital 24-bit pressure and temperature value and different operation modes that allow the user to optimize for conversion speed and current consumption. A high-resolution temperature output allows the implementation of an altimeter/thermometer function without any additional sensor. The MS5637 can be interfaced to any microcontroller with I^{2}C-bus interface. The communication protocol is simple, without the need of programming internal registers in the device. Small dimensions of 3 x 3 x 0.9 mm^3 allow the integration in mobile devices. This new sensor module generation is based on leading MEMS technology and latest benefits from MEAS Switzerland proven experience and know-how in high volume manufacturing of altimeter modules, which has been widely used for over a decade. The sensing principle employed leads to very low hysteresis and high stability of both pressure and temperature signal.

FEATURES

FIELD OF APPLICATION

Smart-phones

Tablet PCs

Personal navigation devices

FUNCTIONAL BLOCK DIAGRAM

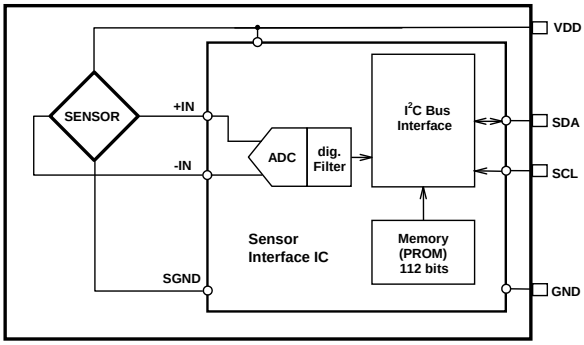

TECHNICAL DATA

Sensor Performances (V_{DD} = 3 V)				
Pressure	**Min**	**Typ**	**Max**	**Unit**
Maximum Range	10		2000	mbar
ADC		24		bit
Resolution (1)		0.11 / 0.062/ 0.039 / 0.028 / 0.021 / 0.016		mbar
Error band at 25°C, 300 to 1200 mbar	-2		+2	mbar
Error band, -20°C to + 85°C 300 to 1200 mbar (2)	-4		+4	mbar
Response time (1)		0.5 / 1.1 / 2.1 / 4.1 / 8.22 / 16.44		ms
Long term stability		±1		mbar/yr
Temperature	**Min**	**Typ**	**Max**	**Unit**
Range	-40		+85	°C
Resolution		<0.01		°C
Accuracy at 25°C	-1		+1	°C

Notes: (1) Oversampling Ratio: 256 / 512 / 1024 / 2048 / 4096 / 8192
(2) With auto-zero at one pressure point

NJOY Exhibit 1020.001

PERFORMANCE SPECIFICATIONS

ABSOLUTE MAXIMUM RATINGS

Parameter	Symbol	Conditions	Min.	Typ.	Max.	Unit
Supply voltage	V_{DD}		-0.3		+3.6	V
Storage temperature	T_S		-20		+85	°C
Overpressure	P_{max}			6		bar
Maximum Soldering Temperature	T_{max}	40 sec max			250	°C
ESD rating		Human Body Model	-2		+2	kV
Latch up		JEDEC standard No 78	-100		+100	mA

ELECTRICAL CHARACTERISTICS

Parameter	Symbol	Conditions	Min.	Typ.	Max.	Unit
Operating Supply voltage	V_{DD}		1.5	3.0	3.6	V
Operating Temperature	T		-40	+25	+85	°C
Supply current (1 sample per sec.)	I_{DD}	OSR 8192		20.09		µA
		4096		10.05		
		2048		5.02		
		1024		2.51		
		512		1.26		
		256		0.63		
Peak supply current		during conversion		1.25		mA
Standby supply current		at 25°C (V_{DD} = 3.0 V)		0.01	0.1	µA
VDD Capacitor		from VDD to GND	100	470		nF

ANALOG DIGITAL CONVERTER (ADC)

Parameter	Symbol	Conditions	Min.	Typ.	Max.	Unit
Output Word				24		bit
Conversion time	t_c	OSR 8192		16.44		ms
		4096		8.22		
		2048		4.13		
		1024		2.08		
		512		1.06		
		256		0.54		

NJOY Exhibit 1020.002

PERFORMANCE SPECIFICATIONS (CONTINUED)

PRESSURE OUTPUT CHARACTERISTICS (V_{DD} = 3.0 V, T = 25 °C UNLESS OTHERWISE NOTED)

Parameter	Conditions		Min.	Typ.	Max.	Unit
Operating Pressure Range	P_{range}		300		1200	mbar
Extended Pressure Range	P_{ext}	Linear Range of ADC	10		2000	mbar
Relative Accuracy, autozero at one pressure point (1)	700…1000 mbar at 25°C			±0.1		mbar
Absolute Accuracy, no autozero	300..1200 mbar at 25°C 300..1200mbar, -20..85°C		-2 -4		+2 +4	mbar
Resolution RMS	OSR	8192 4096 2048 1024 512 256		0.016 0.021 0.028 0.039 0.062 0.11		mbar
Maximum error with supply voltage	V_{DD} = 1.5 V … 3.6 V			±0.5		mbar
Long-term stability				±1		mbar/yr
Reflow soldering impact	IPC/JEDEC J-STD-020C (See application note AN808 on http://meas-spec.com)			-1		mbar
Recovering time after reflow (2)				3		days

(1) Characterized value performed on qualification devices
(2) Recovering time at least 66% of the reflow impact

TEMPERATURE OUTPUT CHARACTERISTICS (V_{DD} = 3 V, T = 25°C UNLESS OTHERWISE NOTED)

Parameter	Conditions		Min.	Typ.	Max.	Unit
Absolute Accuracy	at 25°C -20..85°C		-1 -2		+1 +2	°C
Maximum error with supply voltage	V_{DD} = 1.5 V … 3.6 V			±0.3		°C
Resolution RMS	OSR	8192 4096 2048 1024 512 256		0.002 0.003 0.004 0.006 0.009 0.012		°C

NJOY Exhibit 1020.003

PERFORMANCE SPECIFICATIONS (CONTINUED)

DIGITAL INPUTS (SDA, SCL)

Parameter	Symbol	Conditions	Min.	Typ.	Max.	Unit
Serial data clock	SCL				400	kHz
Input high voltage	V_{IH}		80% V_{DD}		100% V_{DD}	V
Input low voltage	V_{IL}		0% V_{DD}		20% V_{DD}	V
Input leakage current	I_{leak}	T = 25 °C			0.1	µA
Input capacitance	C_{IN}			6		pF

DIGITAL OUTPUTS (SDA)

Parameter	Symbol	Conditions	Min.	Typ.	Max.	Unit
Output high voltage	V_{OH}	I_{source} = 1 mA	80% V_{DD}		100% V_{DD}	V
Output low voltage	V_{OL}	I_{sink} = 1 mA	0% V_{DD}		20% V_{DD}	V
Load capacitance	C_{LOAD}			16		pF

NJOY Exhibit 1020.004

FUNCTIONAL DESCRIPTION

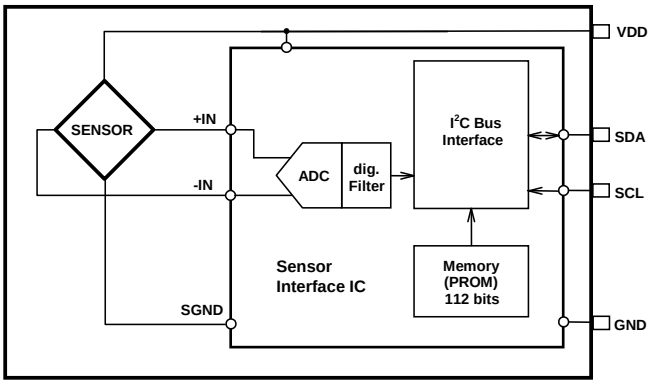

Figure 1: Block diagram

GENERAL

The MS5637 consists of a piezo-resistive sensor and a sensor interface integrated circuit. The main function of the MS5637 is to convert the uncompensated analogue output voltage from the piezo-resistive pressure sensor to a 24-bit digital value, as well as providing a 24-bit digital value for the temperature of the sensor.

FACTORY CALIBRATION

Every module is individually factory calibrated at two temperatures and two pressures. As a result, 6 coefficients necessary to compensate for process variations and temperature variations are calculated and stored in the 112-bit PROM of each module. These bits (partitioned into 6 coefficients) must be read by the microcontroller software and used in the program converting D1 and D2 into compensated pressure and temperature values.

SERIAL I2C INTERFACE

The external microcontroller clocks in the data through the input SCL (Serial CLock) and SDA (Serial DAta). The sensor responds on the same pin SDA which is bidirectional for the I^2C bus interface. So this interface type uses only 2 signal lines and does not require a chip select.

Module reference	Mode	Pins used
MS563702BA03	I^2C	SDA, SCL

NJOY Exhibit 1020.005

PRESSURE AND TEMPERATURE CALCULATION

Start
Maximum values for calculation results:
P_{MIN} = 10mbar P_{MAX} = 2000mbar
T_{MIN} = -40°C T_{MAX} = 85°C T_{REF} = 20°C

Read calibration data (factory calibrated) from PROM

Variable	Description | Equation	Recommended variable type	Size [1] [bit]	Value min	Value max	Example / Typical
C1	Pressure sensitivity | $SENS_{T1}$	unsigned int 16	16	0	65535	46372
C2	Pressure offset | OFF_{T1}	unsigned int 16	16	0	65535	43981
C3	Temperature coefficient of pressure sensitivity | TCS	unsigned int 16	16	0	65535	29059
C4	Temperature coefficient of pressure offset | TCO	unsigned int 16	16	0	65535	27842
C5	Reference temperature | T_{REF}	unsigned int 16	16	0	65535	31553
C6	Temperature coefficient of the temperature | TEMPSENS	unsigned int 16	16	0	65535	28165

Read digital pressure and temperature data

D1	Digital pressure value	unsigned int 32	24	0	16777216	6465444
D2	Digital temperature value	unsigned int 32	24	0	16777216	8077636

Calculate temperature

dT	Difference between actual and reference temperature [2] $dT = D2 - T_{REF} = D2 - C5 * 2^8$	signed int 32	25	-16776960	16777216	68
TEMP	Actual temperature (-40…85°C with 0.01°C resolution) $TEMP = 20°C + dT * TEMPSENS = 2000 + dT * C6 / 2^{23}$	signed int 32	41	-4000	8500	2000 = 20.00 °C

Calculate temperature compensated pressure

OFF	Offset at actual temperature [3] $OFF = OFF_{T1} + TCO * dT = C2 * 2^{17} + (C4 * dT) / 2^6$	signed int 64	41	-17179344900	25769410560	5764707214
SENS	Sensitivity at actual temperature [4] $SENS = SENS_{T1} + TCS * dT = C1 * 2^{16} + (C3 * dT) / 2^7$	signed int 64	41	-8589672450	12884705280	3039050829
P	Temperature compensated pressure (10…1200mbar with 0.01mbar resolution) $P = D1 * SENS - OFF = (D1 * SENS / 2^{21} - OFF) / 2^{15}$	signed int 32	58	1000	120000	110002 = 1100.02 mbar

Display pressure and temperature value

Notes
[1] Maximal size of intermediate result during evaluation of variable
[2] min and max have to be defined
[3] min and max have to be defined
[4] min and max have to be defined

Figure 2: Flow chart for pressure and temperature reading and software compensation.

NJOY Exhibit 1020.006

SECOND ORDER TEMPERATURE COMPENSATION

In order to obtain best accuracy over temperature range, particularly at low temperature, it is recommended to compensate the non-linearity over the temperature. This can be achieved by correcting the calculated temperature, offset and sensitivity by a second-order correction factor. The second-order factors are calculated as follows:

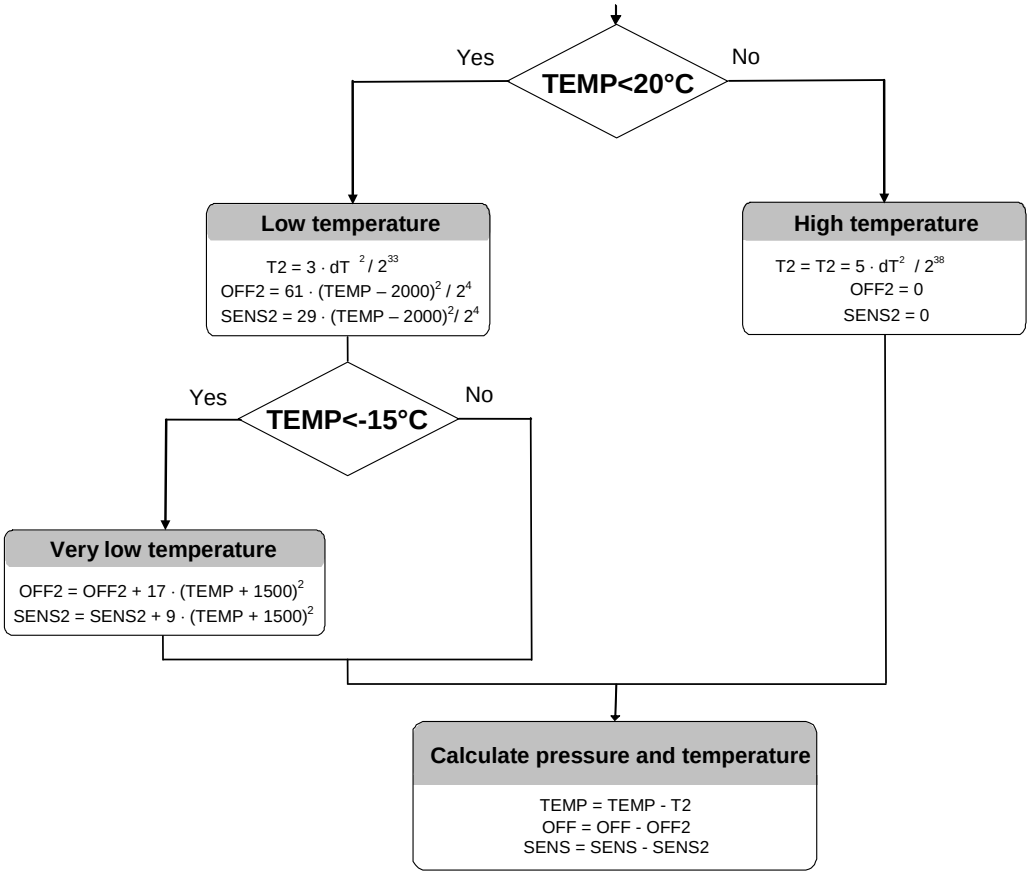

Figure 3: Flow chart for pressure and temperature to the optimum accuracy.

NJOY Exhibit 1020.007

I²C INTERFACE

COMMANDS

The MS5637 has only five basic commands:

1. Reset
2. Read PROM (112 bit of calibration words)
3. D1 conversion
4. D2 conversion
5. Read ADC result (24 bit pressure / temperature)

Each I²C communication message starts with the start condition and it is ended with the stop condition. The MS5637 address is 1110110x (write : x=0, read : x=1).

Size of each command is 1 byte (8 bits) as described in the table below. After ADC read commands, the device will return 24 bit result and after the PROM read 16 bit results. The address of the PROM is embedded inside of the PROM read command using the a2, a1 and a0 bits.

	Command byte								**hex value**
Bit number	0	1	2	3	4	5	6	7	
Bit name	PROM	CONV	-	Typ	Ad2/ Os2	Ad1/ Os1	Ad0/ Os0	Stop	
Command									
Reset	0	0	0	1	1	1	1	0	0x1E
Convert D1 (OSR=256)	0	1	0	0	0	0	0	0	0x40
Convert D1 (OSR=512)	0	1	0	0	0	0	1	0	0x42
Convert D1 (OSR=1024)	0	1	0	0	0	1	0	0	0x44
Convert D1 (OSR=2048)	0	1	0	0	0	1	1	0	0x46
Convert D1 (OSR=4096)	0	1	0	0	1	0	0	0	0x48
Convert D1 (OSR=8192)	0	1	0	0	1	0	1	0	0x4A
Convert D2 (OSR=256)	0	1	0	1	0	0	0	0	0x50
Convert D2 (OSR=512)	0	1	0	1	0	0	1	0	0x52
Convert D2 (OSR=1024)	0	1	0	1	0	1	0	0	0x54
Convert D2 (OSR=2048)	0	1	0	1	0	1	1	0	0x56
Convert D2 (OSR=4096)	0	1	0	1	1	0	0	0	0x58
Convert D2 (OSR=8192)	0	1	0	1	1	0	1	0	0x5A
ADC Read	0	0	0	0	0	0	0	0	0x00
PROM Read	1	0	1	0	Ad2	Ad1	Ad0	0	0xA0 to 0xAE

Figure 4: Command structure

NJOY Exhibit 1020.008

RESET SEQUENCE

The Reset sequence shall be sent once after power-on to make sure that the calibration PROM gets loaded into the internal register. It can be also used to reset the device PROM from an unknown condition.
The reset can be sent at any time. In the event that there is not a successful power on reset this may be caused by the SDA being blocked by the module in the acknowledge state. The only way to get the MS5637 to function is to send several SCLs followed by a reset sequence or to repeat power on reset.

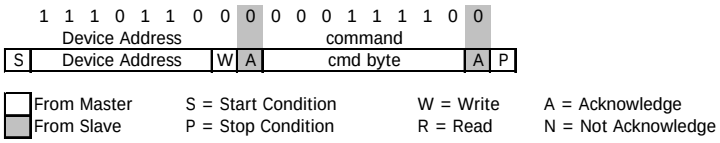

Figure 5: I^{2}C Reset Command

PROM READ SEQUENCE

The read command for PROM shall be executed once after reset by the user to read the content of the calibration PROM and to calculate the calibration coefficients. There are in total 7 addresses resulting in a total memory of 112 bit. Addresses contains factory data and the setup, calibration coefficients, the serial code and CRC. The command sequence is 8 bits long with a 16 bit result which is clocked with the MSB first. The PROM Read command consists of two parts. First command sets up the system into PROM read mode. The second part gets the data from the system.

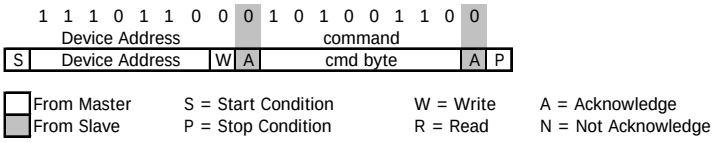

Figure 6: I^{2}C Command to read memory address= 011

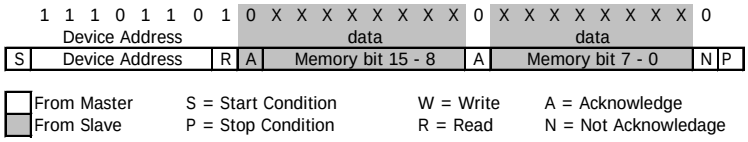

Figure 7: I^{2}C answer from MS5637

CONVERSION SEQUENCE

The conversion command is used to initiate uncompensated pressure (D1) or uncompensated temperature (D2) conversion. After the conversion, using ADC read command the result is clocked out with the MSB first. If the conversion is not executed before the ADC read command, or the ADC read command is repeated, it will give 0 as the output result. If the ADC read command is sent during conversion the result will be 0, the conversion will not stop and the final result will be wrong. Conversion sequence sent during the already started conversion process will yield incorrect result as well. A conversion can be started by sending the command to MS5637. When command is sent to the system it stays busy until conversion is done. When conversion is finished the data can be accessed by sending a Read command, when an acknowledge is sent from the MS5637, 24 SCL cycles may be sent to receive all result bits. Every 8 bits the system waits for an acknowledge signal.

NJOY Exhibit 1020.009

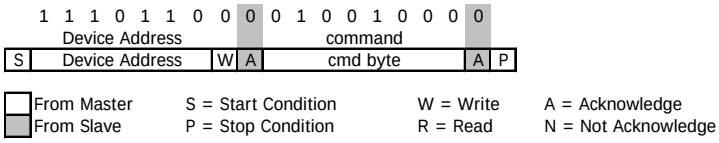

Figure 8: I²C command to initiate a pressure conversion (OSR=4096, typ=D1)

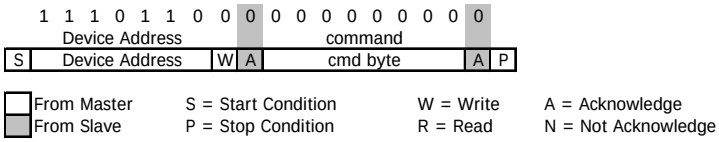

Figure 9: I²C ADC read sequence

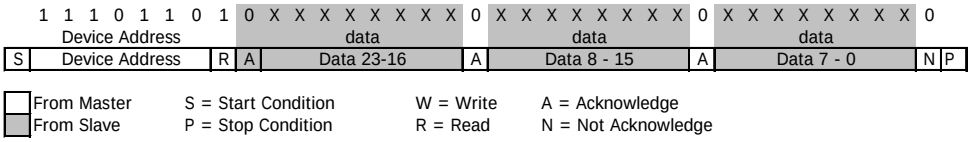

Figure 10: I²C answer from MS5637

CYCLIC REDUNDANCY CHECK (CRC)

MS5637 contains a PROM memory with 112-Bit. A 4-bit CRC has been implemented to check the data validity in memory. The application note AN520 describes in detail CRC-4 code used.

Add	DB15	DB14	DB13	DB12	DB11	DB10	DB9	DB8	DB7	DB6	DB5	DB4	DB3	DB2	DB1	DB0
0	CRC				Factory defined											
1	C1															
2	C2															
3	C3															
4	C4															
5	C5															
6	C6															

Figure 11: Memory PROM mapping

NJOY Exhibit 1020.010

APPLICATION CIRCUIT

The MS5637 is a circuit that can be used in conjunction with a microcontroller in mobile altimeter applications.

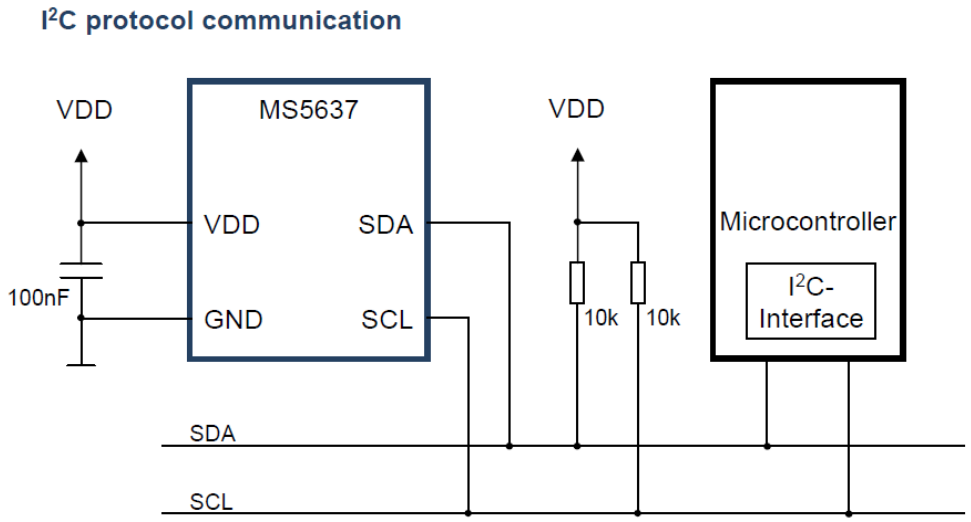

Figure 12: Typical application circuit

NJOY Exhibit 1020.011

PIN CONFIGURATION

Pin	Name	Type	Function
1	VDD	P	Positive supply voltage
2	SDA	I/O	I^2C data
3	SCL	I	I^2C clock
4	GND	I	Ground

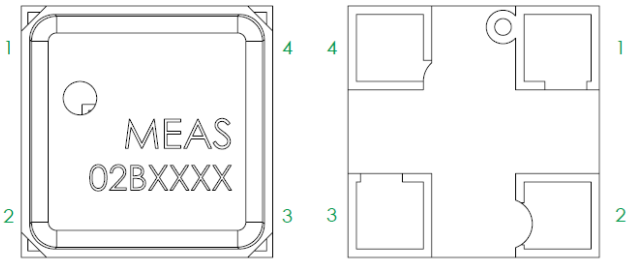

DEVICE PACKAGE OUTLINE

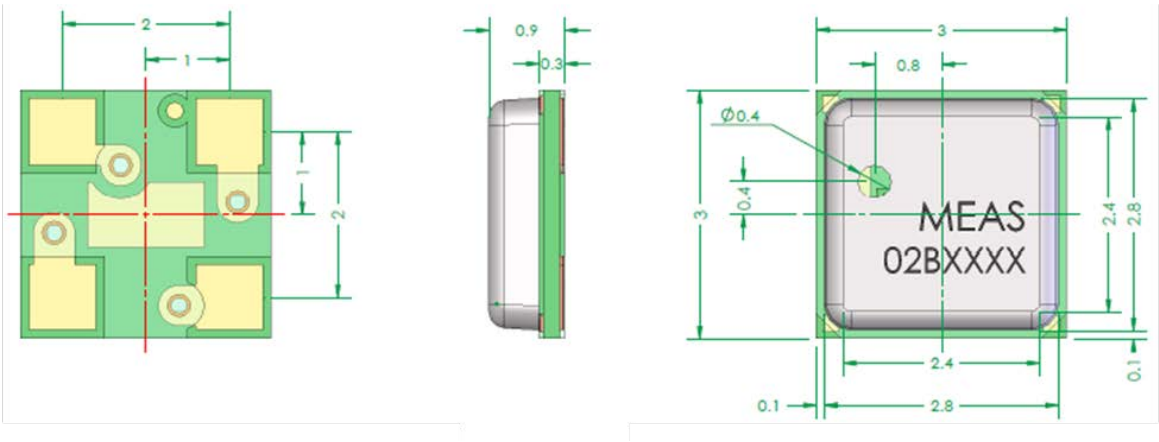

Notes: (1) Dimensions in mm
(2) General tolerance: ±0.1

Figure 13: MS5637 package outline

NJOY Exhibit 1020.012

RECOMMENDED PAD LAYOUT

Pad layout for bottom side of the MS5637 soldered onto printed circuit board.

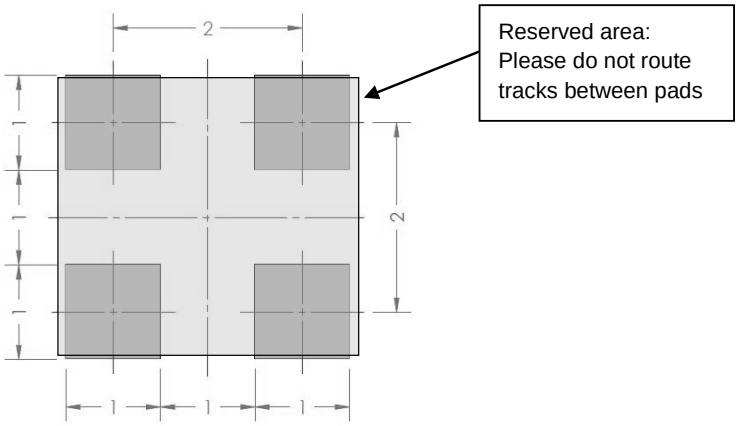

Figure 14: MS5637 pad layout

SHIPPING PACKAGE

Tape and Tape and reel

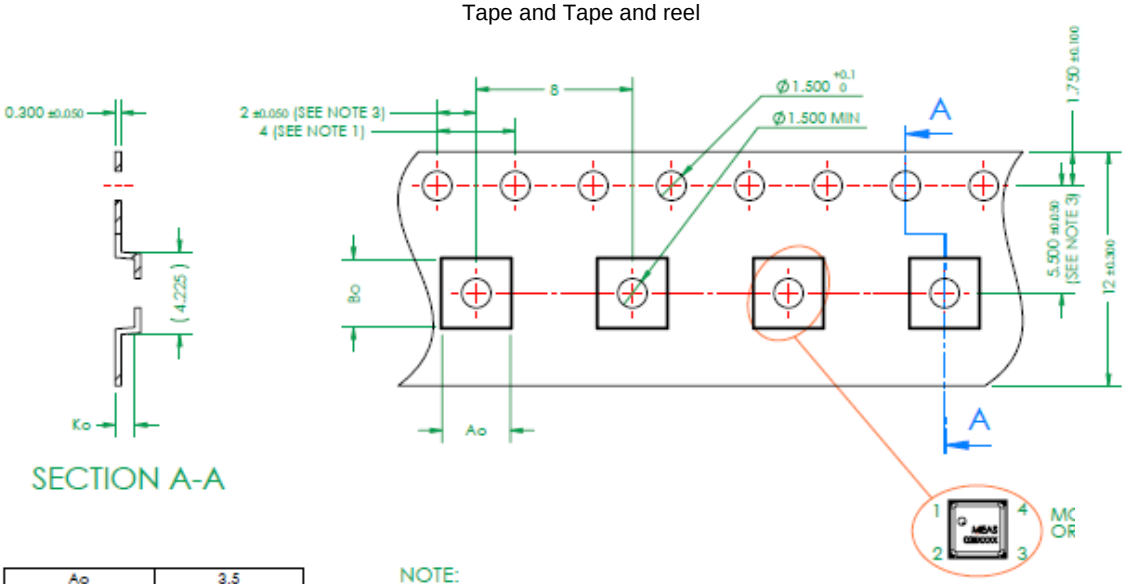

Ao	3.5
Bo	3.5
Ko	1.4

NJOY Exhibit 1020.013

MOUNTING AND ASSEMBLY CONSIDERATIONS

SOLDERING

Please refer to the application note AN808 available on our website for all soldering issues.

MOUNTING

The MS5637 can be placed with automatic Pick & Place equipment using vacuum nozzles. It will not be damaged by the vacuum. Due to the low stress assembly the sensor does not show pressure hysteresis effects. It is important to solder all contact pads.

CONNECTION TO PCB

The package outline of the module allows the use of a flexible PCB for interconnection. This can be important for applications in watches and other special devices.

CLEANING

The MS5637 has been manufactured under clean-room conditions. It is therefore recommended to assemble the sensor under class 10’000 or better conditions. Should this not be possible, it is recommended to protect the sensor opening during assembly from entering particles and dust. To avoid cleaning of the PCB, solder paste of type “no-clean” shall be used. Cleaning might damage the sensor!

ESD PRECAUTIONS

The electrical contact pads are protected against ESD up to 2 kV HBM (human body model). It is therefore essential to ground machines and personnel properly during assembly and handling of the device. The MS5637 is shipped in antistatic transport boxes. Any test adapters or production transport boxes used during the assembly of the sensor shall be of an equivalent antistatic material.

DECOUPLING CAPACITOR

Particular care must be taken when connecting the device to the power supply. A 100nF minimum ceramic capacitor must be placed as close as possible to the MS5637 VDD pin. This capacitor will stabilize the power supply during data conversion and thus, provide the highest possible accuracy.

NJOY Exhibit 1020.014

TYPICAL PERFORMANCE CHARACTERISTICS

PRESSURE AND TEMPERATURE ERROR VERSUS PRESSURE AND TEMPERATURE (TYPICAL VALUES)

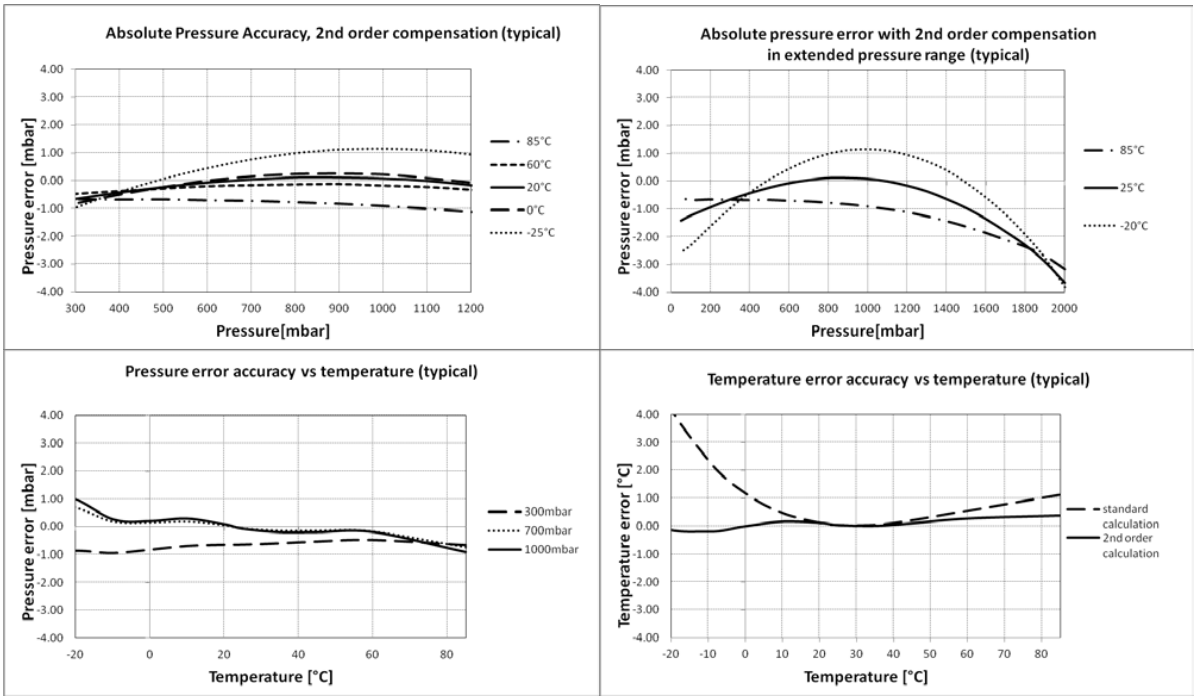

PRESSURE AND TEMPERATURE ERROR VERSUS POWER SUPPLY (TYPICAL VALUES)

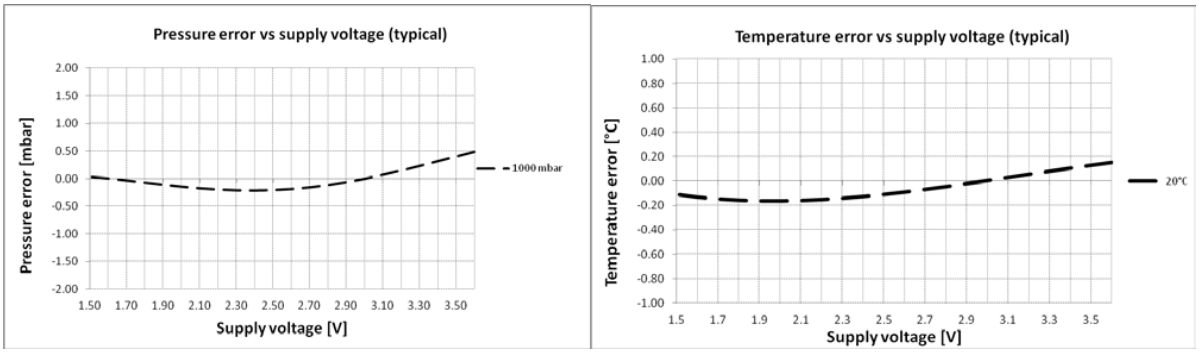

NJOY Exhibit 1020.015

ORDERING INFORMATION

Product Code	Product	Art. No	Delivery Form
MS5637-02BA03	Micro Altimeter Module 3x3mm	MS563702BA03-50	Tape and reel

FACTORY CONTACTS

NORTH AMERICA

Measurement Specialties
45738 Northport Loop West
Fremont, CA 94538

Tel: +1 800 767 1888
Fax: +1 510 498 1578
e-mail: pfg.cs.amer@meas-spec.com
Website: www.meas-spec.com

EUROPE

MEAS Switzerland Sàrl
Ch. Chapons-des-Prés 11
CH-2022 Bevaix

Tel: +41 32 847 9550
Fax: + 41 32 847 9569
e-mail: sales.ch@meas-spec.com
Website: www.meas-spec.com

ASIA

Measurement Specialties (China), Ltd.
No. 26 Langshan Road
Shenzhen High-Tech Park (North)
Nanshan District, Shenzhen, 518057
China
Tel: +86 755 3330 5088
Fax: +86 755 3330 5099
e-mail: pfg.cs.asia@meas-spec.com
Website: www.meas-spec.com

The information in this sheet has been carefully reviewed and is believed to be accurate; however, no responsibility is assumed for inaccuracies. Furthermore, this information does not convey to the purchaser of such devices any license under the patent rights to the manufacturer. Measurement Specialties, Inc. reserves the right to make changes without further notice to any product herein. Measurement Specialties, Inc. makes no warranty, representation or guarantee regarding the suitability of its product for any particular purpose, nor does Measurement Specialties, Inc. assume any liability arising out of the application or use of any product or circuit and specifically disclaims any and all liability, including without limitation consequential or incidental damages. Typical parameters can and do vary in different applications. All operating parameters must be validated for each customer application by customer's technical experts. Measurement Specialties, Inc. does not convey any license under its patent rights nor the rights of others.

NJOY Exhibit 1020.016