Trials@uspto.gov
571-272-7822

Paper 10
Entered: July 23, 2024

UNITED STATES PATENT AND TRADEMARK OFFICE

BEFORE THE PATENT TRIAL AND APPEAL BOARD

GOOGLE LLC,
Petitioner,

v.

PROXENSE, LLC,
Patent Owner.

IPR2024-00234
Patent 9,298,905 B1

Before THU A. DANG, KEVIN F. TURNER, and
DAVID C. McKONE, *Administrative Patent Judges.*

TURNER, *Administrative Patent Judge.*

DECISION
Granting Institution of *Inter Partes* Review
35 U.S.C. § 314

I. INTRODUCTION

A. Background and Summary

Google LLC ("Petitioner") filed a Petition (Paper 1, "Pet.") requesting *inter partes* review of claims 1–7 and 9–18 of U.S. Patent No. 9,298,905 B1 (Ex. 1001, "the '905 Patent"). Pet. 1. Proxense, LLC ("Patent Owner") filed a Preliminary Response (Paper 6, "Prelim. Resp."). With our authorization, Petitioner filed a Preliminary Reply (Paper 7, "Prelim. Reply") and Patent Owner filed a Preliminary Sur-reply (Paper 9, "Prelim. Sur-reply"), directed to issues of discretionary denial.

We have authority to determine whether to institute an *inter partes* review. *See* 35 U.S.C. § 314 (2016); 37 C.F.R. § 42.4(a) (2020). The standard for instituting an *inter partes* review is set forth in 35 U.S.C. § 314(a), which provides that an *inter partes* review may not be instituted "unless . . . there is a reasonable likelihood that the petitioner would prevail with respect to at least 1 of the claims challenged in the petition." For the reasons explained below, we institute an *inter partes* review of the '905 Patent.

B. Related Matters

The parties advise us that the '905 Patent is involved in four district court cases, including *Proxense, LLC v. Google LLC*, No. 6.23-CV-00320 (W.D. Tex.) ("the Texas case"). Pet. 57; Paper 4, 1. Petitioner also has filed petitions for *inter partes* review of patents related to the '905 Patent, including IPR2024-00232 (challenging U.S. Patent No. 8,352,730 B1 ("the '730 patent")), and IPR2024–00233 (challenging U.S. Patent No. 8,886,954 B1 ("the '954 patent")). The '905 Patent also was the subject of *Samsung Electronics America, Inc. v. Proxense LLC*, IPR2021-01447 (PTAB)

(institution denied). *See* Ex. 1007 (IPR2021-01447, Paper 12 ("Samsung DDI")). The parties also note that the '905 Patent is the subject of *ex parte* reexamination in *In re Proxense, LLC*, Application 90/015,053 (filed June 8, 2022) (*see* Ex. 1011, "the '053 reexam"), and two additional reexaminations of patents related to the '905 Patent: Application No. 90/015,052, reexamining the '730 patent, and Application No. 90/015,054, reexamining U.S. Patent No. 10,698,989. Pet. 54; Prelim. Resp. 14.

C. The '905 Patent

The '905 Patent discloses systems for "authentication responsive to biometric verification of a user being authenticated," using "a biometric key [that] persistently (or permanently) stores a code such as a device identifier (ID) and biometric data for a user in a tamper-resistant format." Ex. 1001, 1:65–67. The '905 Patent states that "[c]onventional user authentication techniques," such as requiring input of a password, were deficient because they "require[d] the user to memorize or otherwise keep track of the credentials" and "it can be quite difficult to keep track of them all." *Id.* at 1:28–37. Other techniques, such as "provid[ing] the user with an access object . . . that the user can present to obtain access," were inadequate because "authentication merely proves that the access object itself is valid; it does not verify that the legitimate user is using the access object." *Id.* at 1:38–46. According to the '905 Patent, there was a need in the art for a system for "verifying a user that is being authenticated that does not suffer from [such] limitations" and "ease[s] authentications by wirelessly providing an identification of the user." *Id.* at 1:55–58.

Figure 2 of the ’905 Patent is reproduced below.

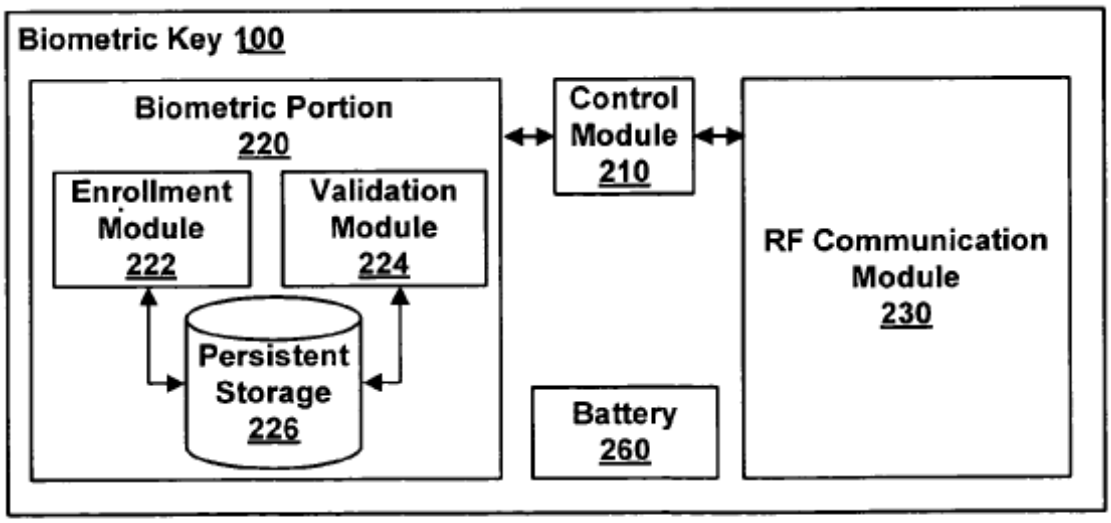

FIG. 2

Figure 2 is a block diagram of the functional modules of a biometric key. Ex. 1001, 3:30–33, 4:42–43. Enrollment module 222 registers a user with biometric key 100 by persistently storing biometric data associated with the user (e.g., a digital image of the retina, fingerprint, or voice sample) in persistent storage 226. *Id.* at 4:67–5:23. Enrollment module 222 registers biometric key 100 with a trusted authority by providing a code, such as a device ID, to the trusted authority or, alternatively, the trusted authority can provide a code to biometric key 100. *Id.* at 5:3–7. The code is stored in persistent storage 226. *Id.* at 5:24–26. “Persistent storage 226 is itself, and stores data in, a tamper-proof format to prevent any changes to the stored data.” *Id.* at 5:31–33. “Tamper-proofing increases reliability of authentication because it does not allow any changes to biometric data (i.e., allows reads of stored data, but not writes to store new data or modify existing data).” *Id.* at 5:33–36. In a fingerprint embodiment, validation module 224 uses scan pad 120 (shown in Figure 1) to capture scan data from

the user's fingerprint and compares the scanned data to the stored fingerprint to determine whether the scanned data matches the stored data. *Id.* at 5:8–12.

The interaction of biometric key 100 with other system components is illustrated in Figure 3, reproduced below.

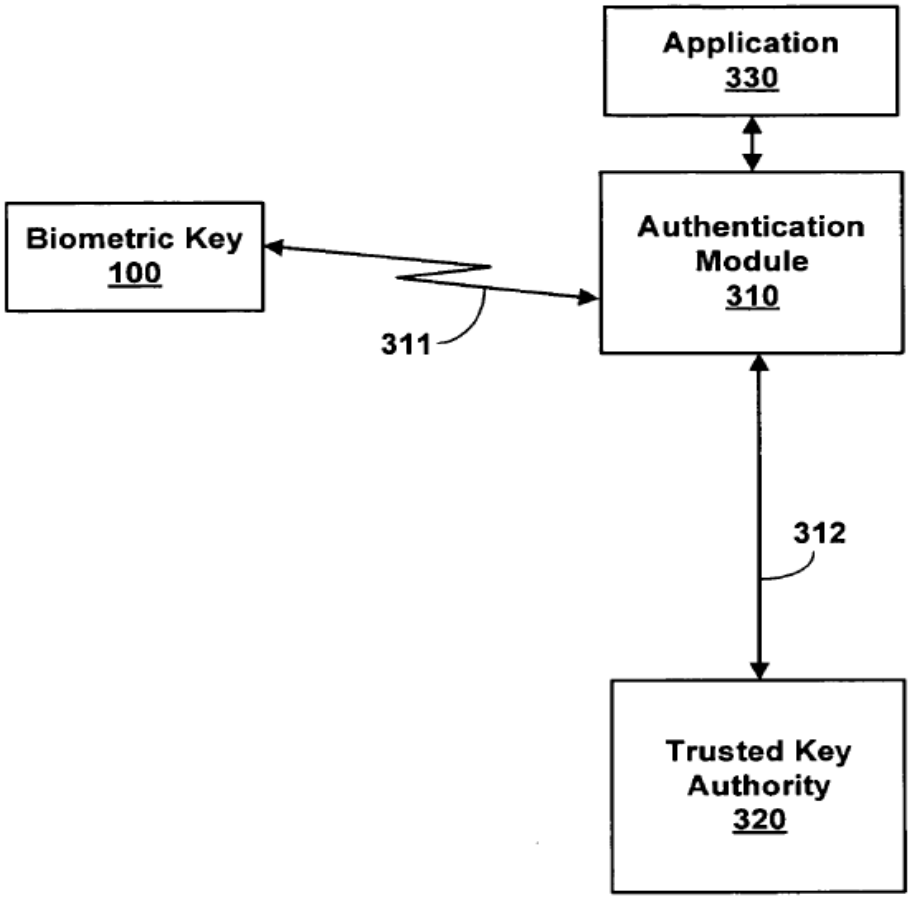

FIG. 3

Figure 3 is "a block diagram illustrating a system for providing authentication information for a biometrically verified user." Ex. 1001, 3:33–35. Authentication module 310 is coupled to biometric key 100 via line 311 (a wireless medium) and with trusted key authority 320 via line 312 (a secure data network such as the Internet). *Id.* at 5:67–6:7. Authentication

module 310 requires the device ID code (indicating successful biometric verification) from biometric key 100 before allowing the user to access application 330. *Id.* at 6:10–13. Authentication module 310 provides the device ID code from biometric key 100 to trusted key authority 320 to verify that it belongs to a legitimate key. *Id.* at 6:13–19; *see also id.* at 6:39–45 ("In one embodiment, trusted key authority 320 verifies that a code from a biometric key is legitimate. To do so, the trusted key authority 320 stores a list of codes for legitimate biometric keys. . . . In one embodiment, trusted key authority 320 can also store a profile associated with a biometric key."). Authentication module 310 then sends a message to application 330 to allow the user access to the application responsive to a successful authentication by trusted key authority 320. *Id.* at 6:17–19.

"Application 330 can be, for example, a casino machine, a keyless lock, a garage door opener, an ATM machine, a hard drive, computer software, a web site, a file, a financial account (e.g. a savings account, checking account, brokerage account, credit card account, credit line, etc.) and the like." Ex. 1001, 6:21–26. Trusted key authority 320 can be operated by an agent, such as "a government official, a notary, and/or an employee of a third party which operates the trusted key authority, or another form of witness." *Id.* at 7:33–36. "The agent can follow standardized procedures such as requiring identification based on a state issued driver license, or a federally issued passport in order to establish a true identity of the user." *Id.* at 7:36–39.

D. Illustrative Claim

Challenged claims 1, 9, and 13 of the ’905 Patent are independent. Claims 2–7, 10–12, and 14–18 depend directly or indirectly from claim 1. Claim 1, reproduced below,[1] is illustrative of the claimed subject matter:

> 1. [1preamble] A method comprising:
>
> [1a] persistently storing biometric data of a legitimate user and an ID code on an integrated device;
>
> [1b] responsive to receiving a request for a biometric verification of a user, receiving, from a biometric sensor, scan data from a biometric scan performed by the biometric sensor;
>
> [1c] comparing the scan data to the biometric data to determine whether the scan data matches the biometric data;
>
> [1d] responsive to a determination that the scan data matches the biometric data, wirelessly sending the ID code for comparison by a third-party trusted authority against one or more previously registered ID codes maintained by the third-party trusted authority; and
>
> [1e] responsive to receiving an access message from the third-party trusted authority indicating that the third-party trusted authority successfully authenticated the ID code, allowing the user to complete a financial transaction.

Ex. 1001, 10:11–28.

[1] We add bracketed numbering corresponding to the numbering Petitioner uses in the Petition.

E. The Asserted Grounds

Petitioner asserts the following grounds of unpatentability (Pet. 1):

References	Basis	Claim(s) Challenged
Ludtke[2]	§ 103(a)[3]	1, 3–7, 9, 10, 12–18
Ludtke, Kon[4]	§ 103(a)	2, 11

Petitioner also relies on the Declaration of Stephen Gray (Ex. 1003).

II. ANALYSIS

A. Claim Construction

We construe a claim

> using the same claim construction standard that would be used to construe the claim in a civil action under 35 U.S.C. 282(b), including construing the claim in accordance with the ordinary and customary meaning of such claim as understood by one of ordinary skill in the art and the prosecution history pertaining to the patent.

37 C.F.R. § 42.100(b) (2019); *see also Phillips v. AWH Corp.*, 415 F.3d 1303 (Fed. Cir. 2005) (en banc).

Petitioner observes that "third-party trusted authority," "ID code," and "access message" have been construed previously, by the Board and in district court litigation. Pet. 3–4 (citing Ex. 1007, 14; Ex. 1009, 3; Ex. 1010,

---

[2] US Patent No. 7,188,110 B1, filed December 11, 2000, issued March 6, 2007 (Ex. 1005, "Ludtke").
[3] The Leahy-Smith America Invents Act, Pub. L. No. 112-29, 125 Stat. 284 (2011) ("AIA"), amended 35 U.S.C. § 103. Because the '905 Patent has an effective filing date before the effective date of the relevant provision of the AIA, we cite to the pre-AIA version of § 103.
[4] US Patent Application Publication No. 2002/0046336 A1, published April 18, 2002 (Ex. 1006, "Kon").

15, 20). Nevertheless, Petitioner argues that no claim terms need to be construed. *Id.* Patent Owner requests that we adopt previous constructions of "third-party trusted authority," "ID code," and "access message." Prelim. Resp. 2–5. We address the latter claim terms below.

1. Third-party trusted authority

In the Samsung DDI, the Board construed "third-party trusted authority," in claims 1 and 9 of the '905 Patent, to mean "a trusted authority that is an entity separate from the parties to a transaction." Ex. 1007, 14. The Board found that "[t]he plain meaning of 'third-party trusted authority' suggests an entity or party separate from the principal parties to a transaction." *Id.* at 13 (citing THE AMERICAN HERITAGE COLLEGE DICTIONARY 1433 (4th ed. 2004) ("third party n. . . . 2. One other than the principals involved in a transaction." (Ex. 3002 in IPR2021-01447)). The Samsung DDI panel further found that the Specification supported its construction, and noted that the Specification included examples of "a government official, a notary, and/or an employee of a third party which operates the trusted key authority, or another form of witness." *Id.* at 13–14 (quoting Ex. 1001, 7:33–36). The panel further observed that the applicant's statements during prosecution were also "consistent with a third-party trusted authority being an entity separate from the principal parties to a transaction." *Id.* at 14.

Patent Owner contends that the Samsung DDI provided "further clarity as to the meaning of its constructions when evaluating the then-asserted prior art," specifically, Lapsley (Exhibit 1007 to IPR2021-01444, introduced here as Ex. 3001). Prelim Resp. 4–5. As we understand Patent Owner's position, Patent Owner contends that the Samsung DDI distinguished a third-party trusted authority from an "active participant," or

any entity that participates in a transaction, and limited a third-party trusted authority to an entity that "takes on a witness role." *Id.* at 5.

In the Samsung DDI, the panel determined that Samsung had not explained sufficiently what the component it identified as a third-party trusted authority was a third party relative to or what application Lapsley's user was being permitted to access. Ex. 1007, 23–24. As Samsung presented it, the resource it identified as the third-party trusted authority appeared to be the resource accessed. *Id.* However, the panel's preliminary evaluation of the evidence in that proceeding did not find expressly that such resource was not a third-party trusted authority; rather, it found that Samsung's presentation of evidence was not sufficient to show that it was a third-party trusted authority. *Id.* In any case, the panel did not purport to clarify or further construe the term "third-party trusted authority." *Id.*

The Samsung DDI does not provide a basis for further limiting a "third-party trusted authority" to exclude any active participant in a transaction. This would exclude the trusted key authority of the preferred embodiments of the '730 patent, which actively participates in a transaction, for example by receiving a request for authentication with a code, determining whether the code is valid, authenticating the code, and transmitting an access code to the requester, which allows a user access to an application. Ex. 1001, 8:8–20, Fig. 7. Although the trusted key authority in this example is not a principal party to the transaction (here, the parties are the user and the application), it is an active participant in facilitating the transaction. In another preferred embodiment of the '905 Patent, trusted key authority 320 plays an active role in transactions, e.g., verifying to a grocery store that a biometric key presented by a customer is legitimate, thereby allowing the transaction to proceed. *Id.* at 6:39–53, Figs. 3–4. However,

despite trusted key authority's active participation, the parties to such a transaction are the customer and the grocery store, not trusted key authority 320. The "witness" role mentioned in the Specification (Ex. 1001, 7:33–36) refers to an agent's relationship to the principal parties to the transaction, not to level of activity the agent engages in. *See id.* at 7:30–642, Fig. 5 (describing activities of an agent).

Patent Owner's proposed clarifications, or modifications, to the Samsung DDI's construction of "third-party trusted authority," which would exclude these embodiments, is presumptively incorrect. *See Sequoia Tech., LLC v. Dell, Inc.*, 66 F.4th 1317, 1327 (Fed. Cir. 2023) ("The Federal Circuit "recognize[s] that '[a] claim construction exclud[ing] a preferred embodiment is rarely, if ever correct.'" (quoting *Kaufman v. Microsoft Corp.*, 34 F.4th 1360, 1372 (Fed. Cir. 2022) (second and third alterations in original)). Indeed, Patent Owner's view would transform any entity that is accessed for any reason in a transaction into a party to that transaction, thus excluding it from the scope of a "third-party trusted authority." Patent Owner, however, has advanced no persuasive support for such a narrow reading of the claims.

Accordingly, we adopt the Samsung DDI's construction without Patent Owner's modifications. On the current record, a "third-party trusted authority" is "a trusted authority that is an entity separate from the parties to a transaction."

2. Remaining claim terms

Based on the preliminary record, we do not find it necessary to provide express claim constructions for any other terms. *See Nidec Motor Corp. v. Zhongshan Broad Ocean Motor Co.*, 868 F.3d 1013, 1017 (Fed. Cir. 2017) (noting that "we need only construe terms 'that are in

controversy, and only to the extent necessary to resolve the controversy'") (quoting *Vivid Techs., Inc. v. Am. Sci. & Eng'g, Inc.*, 200 F.3d 795, 803 (Fed. Cir. 1999)).

B. Legal Standards

A claim is unpatentable for obviousness if, to one of ordinary skill in the pertinent art, "the differences between the subject matter sought to be patented and the prior art are such that the subject matter as a whole would have been obvious at the time the invention was made." *KSR Int'l Co. v. Teleflex Inc.*, 550 U.S. 398, 406 (2007) (quoting 35 U.S.C. § 103(a) (2006)). The question of obviousness is resolved on the basis of underlying factual determinations, including "the scope and content of the prior art"; "differences between the prior art and the claims at issue"; and "the level of ordinary skill in the pertinent art." *Graham v. John Deere Co.*, 383 U.S. 1, 17–18 (1966). Additionally, secondary considerations, such as "commercial success, long felt but unsolved needs, failure of others, etc., might be utilized to give light to the circumstances surrounding the origin of the subject matter sought to be patented. As indicia of obviousness or nonobviousness, these inquiries may have relevancy." *Id.* When conducting an obviousness analysis, we consider a prior art reference "not only for what it expressly teaches, but also for what it fairly suggests." *Bradium Techs. LLC v. Iancu*, 923 F.3d 1032, 1049 (Fed. Cir. 2019) (citation omitted).

A patent claim "is not proved obvious merely by demonstrating that each of its elements was, independently, known in the prior art." *KSR*, 550 U.S. at 418. An obviousness determination requires finding "both 'that a skilled artisan would have been motivated to combine the teachings of the prior art references to achieve the claimed invention, and that the skilled

artisan would have had a reasonable expectation of success in doing so.'" *Intelligent Bio-Sys., Inc. v. Illumina Cambridge Ltd.*, 821 F.3d 1359, 1367–68 (Fed. Cir. 2016) (citation omitted); *see KSR*, 550 U.S. at 418 (for an obviousness analysis, "it can be important to identify a reason that would have prompted a person of ordinary skill in the relevant field to combine the elements in the way the claimed new invention does").

"Although the *KSR* test is flexible, the Board 'must still be careful not to allow hindsight reconstruction of references . . . without any explanation as to *how* or *why* the references would be combined to produce the claimed invention.'" *TriVascular, Inc. v. Samuels*, 812 F.3d 1056, 1066 (Fed. Cir. 2016) (citation omitted). Further, an assertion of obviousness "cannot be sustained by mere conclusory statements; instead, there must be some articulated reasoning with some rational underpinning to support the legal conclusion of obviousness." *KSR*, 550 U.S. at 418 (quoting *In re Kahn*, 441 F.3d 977, 988 (Fed. Cir. 2006)); *accord In re NuVasive, Inc.*, 842 F.3d 1376, 1383 (Fed. Cir. 2016) (stating that "conclusory statements" amount to an "insufficient articulation[] of motivation to combine"; "instead, the finding must be supported by a 'reasoned explanation'" (citation omitted)); *In re Magnum Oil Tools Int'l, Ltd.*, 829 F.3d 1364, 1380 (Fed. Cir. 2016) ("To satisfy its burden of proving obviousness, a petitioner cannot employ mere conclusory statements. The petitioner must instead articulate specific reasoning, based on evidence of record, to support the legal conclusion of obviousness.").

C. Level of Ordinary Skill in the Art

Petitioner contends that a person of ordinary skill in the art "would have had at least a bachelor's degree in Computer or Electrical Engineering

or an equivalent engineering discipline, and at least three years of experience in the field of encryption and security, or the equivalent," and that "[a]dditional education could substitute for professional experience, and significant work experience could substitute for formal education." Pet. 4–5 (citing Ex. 1003 ¶¶ 31–32, 54–56). Patent Owner does not challenge Petitioner's proposed level of skill or propose an alternative. *See* Prelim. Resp. Based on the record presented, including our review of the '905 Patent and the types of problems and solutions described in the '905 Patent and cited prior art, we adopt Petitioner's definition of the level of ordinary skill in the art and apply it for purposes of this Decision.

D. Obviousness of Claims 1, 3–7, 9, 10, and 12–18 over Ludtke

Petitioner contends that claims 1, 3–7, 9, 10, and 12–18 would have been obvious over Ludtke. Pet. 5–41. For the reasons given below, Petitioner has made a sufficient showing.

1. Overview of Ludtke

Ludtke describes techniques for identifying an authorized user with a biometric device and enabling the authorized user to access private information over a voice network. Ex. 1005, Abstract. Figure 4 of Ludtke, reproduced below, illustrates an example:

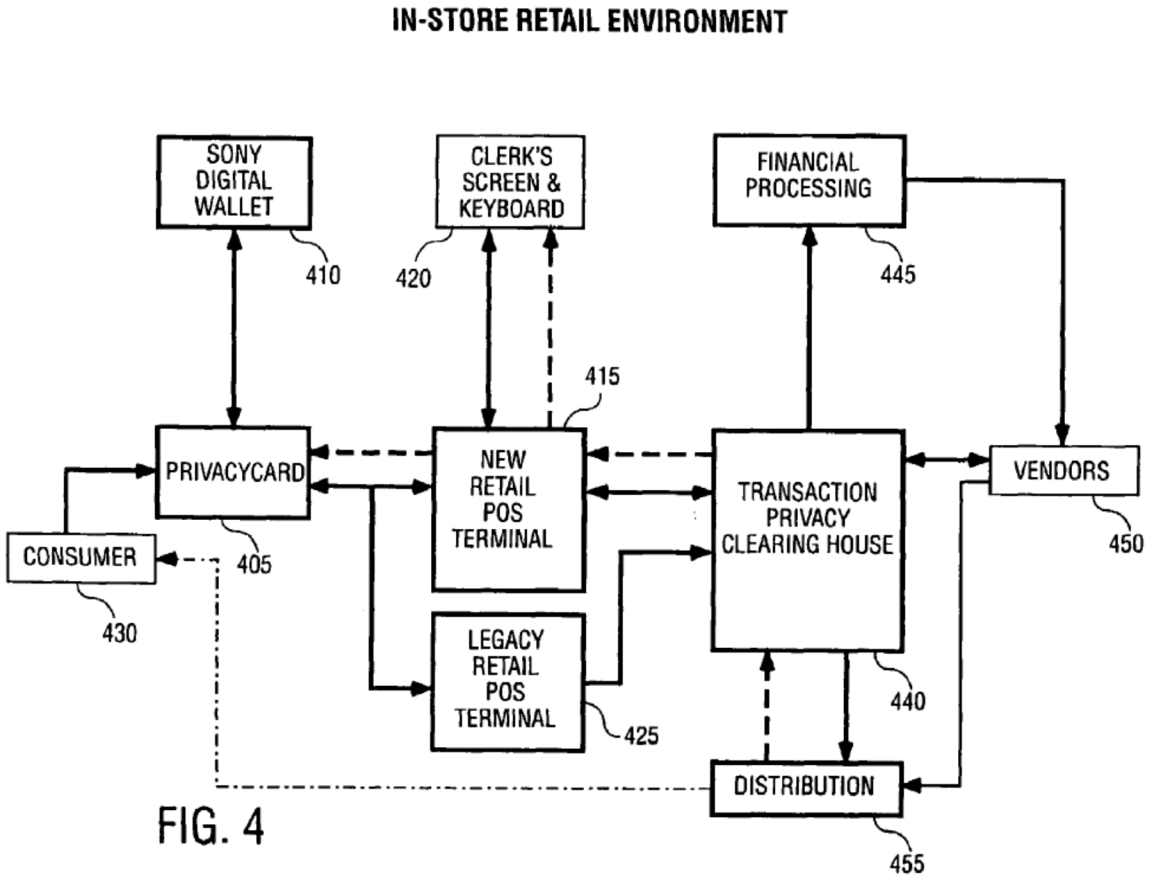

Figure 4 is a block diagram of an in-store retail system. *Id.* at 2:8–9.

In the retail environment of Figure 4, privacy card 405 interfaces with digital wallet 410 and retail point of sale (POS) terminal 415. *Id.* at 8:53–56. User 430 provides privacy card 405 and digital wallet 410 to POS terminal 415 or legacy retail POS terminal 425. *Id.* at 8:59–67. Transaction privacy clearing house (TPCH) 440 receives user 430's privacy card identification and determines whether the user has sufficient funds to perform the transaction. *Id.* at 9:1–3.

> In one embodiment, the transaction device(s), POS terminals and/or TPCH may function to verify the authenticity of each other. For example, a privacy card and digital wallet may be configured to verify the legitimacy of each other. Similarly, the transaction device may be configured to verify the legitimacy of the POS terminal and/or TPCH. A variety of verification techniques may be used. For example lists of devices with

> account and/or access issues may be maintained. For example, in one embodiment, the public key infrastructure (PKI) may be used to verify legitimacy.

Id. at 5:11–20. "One means of authentication is some kind of PIN code entry. Alternately, authentication may be achieved by using more sophisticated technologies such as a biometric solution (e.g., fingerprint recognition)." *Id.* at 4:65–5:1. TPCH 440 interfaces with financial processing system 445, vendors 450, and distribution systems 455 to complete the transaction. *Id.* at 9:4–6.

Figure 16 of Ludtke is reproduced below:

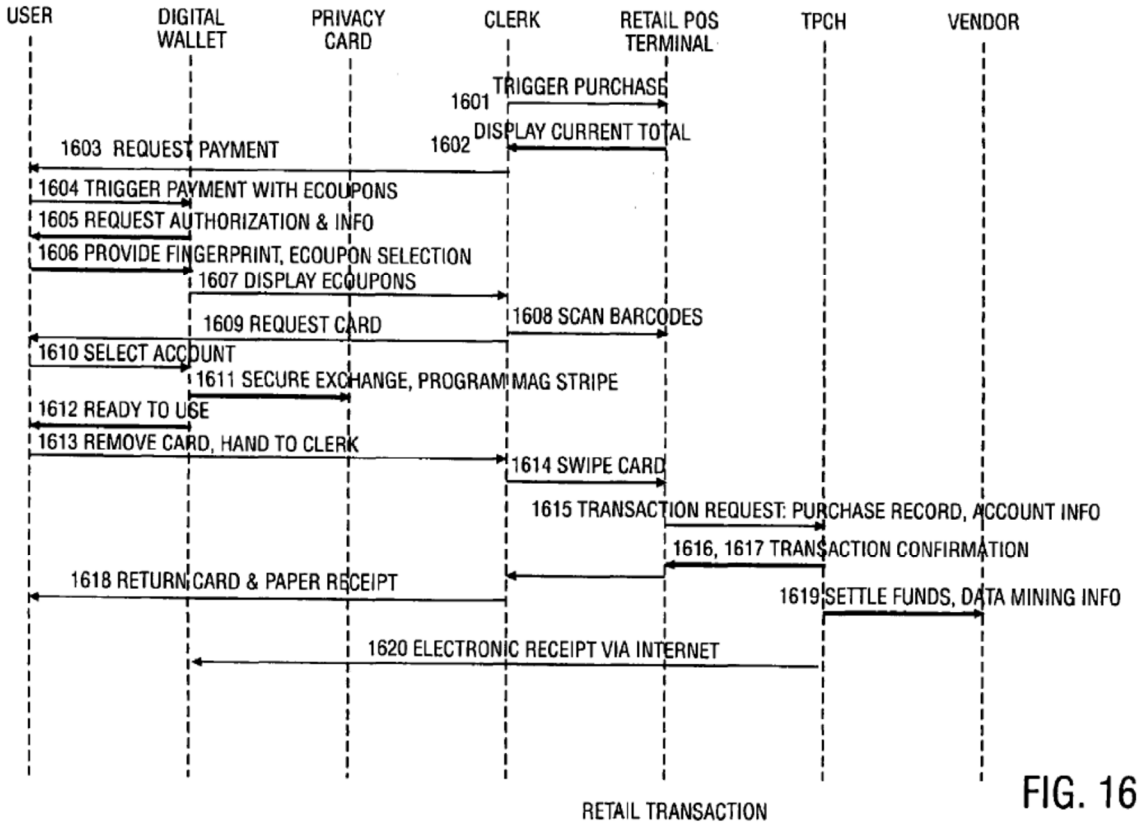

FIG. 16

Figure 16 is a flowchart of a process for performing a retail transaction. *Id.* at 2:35–36. A retail clerk triggers a purchase action by scanning a package's bar code (step 1601), the POS terminal displays the transaction total (step 1602), and the clerk requests payment from the user (step 1603).

Id. at 27:17–25. The user presses a fingerprint recognition pad of the digital wallet, which verifies the user (steps 1604–1607). *Id.* at 27:25–34. The clerk initiates payment (step 1609), the user uses the digital wallet to select an account to use for payment (step 1610), and the magnetic strip of the privacy card is programmed with the account number (step 1611). *Id.* at 17:44–49. The clerk swipes the card at the POS terminal (steps 1612–1614), a magnetic strip reader of the POS terminal reads the privacy card, the POS terminal sends a transaction request to the TPCH (step 1615), and the TPCH returns a confirmation message to the POS terminal (step 1616). *Id.* at 17:50–65. The TPCH then settles funds, transferring an appropriate amount into the vendor's account (step 1619). *Id.* at 17:66–67.

Ludtke describes various alternatives for the TPCH's involvement in funds settlement:

> The settlement of funds involves the transfer of the appropriate financial credit into the vendor's account. For the purposes of this example, it is assumed that the account is managed completely by the TPCH, and thus the funds transfer is handled completely inside of the TPCH. The vendor is not given any user identity information regarding the transaction; rather, the user is represented only by the transaction device identification information.
>
> In an alternative embodiment, the TPCH may issue a funds settlement request to a third party financial institution on behalf of the user, causing the necessary funds to be transferred to the vendor from the user's account. In yet another alternative embodiment, the TPCH may act as a proxy for the user, whereby the TPCH takes the funds from the user's account as managed by a third party financial institution, and then issues a funds transfer from the TPCH account to the vendor's account. This embodiment further preserves the user's identity by not linking it with the funds transfer into the vendor's account.

Id. at 29:35–53.

2. Independent Claim 1

a) Petitioner's Assertions

The preamble of claim 1 recites "[a] method comprising," and Petitioner contends that Ludtke discloses '"[a] method of identifying an authorized user with a biometric device and enabling the authorized user to access private information' using a 'transaction device' such as a privacy card and/or digital wallet (integrated device)." Pet. 8–9 (citing Ex. 1005, 3:32–36; Ex. 1003 ¶¶ 73–74).

Regarding claim limitations 1a and 1b, Petitioner argues that Ludtke teaches persistently storing, in a user identity/account information block of the transaction device, biometric information (e.g., retinal scan, voice, DNA, hand profile, face recognition), a plurality of codes and other values comprising a device ID code uniquely identifying the transaction device (e.g., globally unique silicon ID (GUID), magnetic strip, bar codes), and a secret decryption value (e.g., public key infrastructure (PKI) public keys and private keys), where Ludtke's transaction device requests and receives a fingerprint sample or other biometric data. Pet. 9–13 (citing Ex. 1005, 8:63–67, 9:18–25, 13:27–29, 13:39–41, 14:13–21, 14:19–21, 14:33–46, 16:47–49, 19:9–14, 19:29–40, 23:11–19, 30:18–27, Figs. 7B–7C, 27, 33; Ex. 1003 ¶¶ 75–82). Petitioner's showing as to these limitations of claim 1 is sufficient, at this stage of the proceeding.

As to claim limitation 1c, Petitioner argues that Ludtke's transaction device compares the fingerprint sample to stored authorized samples to determine a match. *Id.* at 13 (citing Ex. 1005, 14:40–46; Ex. 1003 ¶ 83). Petitioner's showing as to these limitations of claim 1 is sufficient, at this stage of the proceeding.

Claim limitation 1d recites:

> responsive to a determination that the scan data matches the biometric data, wirelessly sending the ID code for comparison by a third-party trusted authority against one or more previously registered ID codes maintained by the third-party trusted authority.

Petitioner argues that Ludtke describes the transaction device sending, over a wireless network, to the TPCH, a communication including a unique transaction ID code. Pet. 13 (citing Ex. 1005, 5:63–64, 7:46–48, 9:26–30, 9:35–42, 9:51–59, 28:50–29:12, 30:23–27; Ex. 1003 ¶¶ 84–97).

As to whether Ludtke teaches a determination whether the scan data matches the biometric data, Petitioner points to Ludtke's description of the transaction device (digital wallet or privacy card) prompting the user to supply a fingerprint recognition sample, comparing the sample to stored fingerprints, and determining that the user is authorized if the supplied sample is recognized. Pet. 14–15 (citing Ex. 1005, 1:22–31, 1:37–38, 4:62–5:1, 14:33–46, 18:45–50, 18:52–55, 27:12–13, 28:13–18, 28:26–40, 28:41–45, 28:50–29:12, 34:25–27; Ex. 1003 ¶¶ 85–89). As to whether Ludtke teaches wirelessly sending one or more codes for authentication by a third-party trusted authority, Petitioner points to Ludtke's description of its transaction device sending the unique transaction device ID to the TPCH using wireless or cellular signals. *Id.* at 16 (citing Ex. 1005, 9:26–42; Ex. 1003 ¶ 90). Petitioner's showing as to these aspects of claim limitation 1d is sufficient, at this stage of the proceeding.

Petitioner contends that the TPCH is "an entity separate from the parties to a transaction," as we construe "third-party trusted authority," because "it is distinct from the transaction device, the POS on which the user/transaction device is performing a transaction, and the '*external*

retailers and vendors' that complete the transaction." Pet. 16–17 (quoting Ex 1005, 9:35–39; citing Ex. 1005, Fig. 6; Ex. 1003 ¶ 92). Petitioner argues that "Ludtke expressly identifies the TPCH as external to the parties to the transaction, capable only of communication with the parties," and that the TPCH functions "'as the middleman of the distribution channel.'" *Id.* at 18–19 (quoting Ex. 1005, 7:44–48; citing Ex. 1005, 9:26–30, 9:52–59; Ex. 1003 ¶ 92). Petitioner also asserts that persons of ordinary skill in the art would have understood that the TPCH compares the received transaction device ID to one or more transaction IDs previously stored in the customer databases because "[t]he TPCH uses the unique ID of the transaction device to process the transaction" and "knows which transaction device, and hence which user, the transaction it associated with." *Id.* at 21 (quoting Ex. 1005, 29:12–14, 30:23–27; Ex. 1003 ¶ 96).

As to claim limitation 1e, Petitioner argues that the TPCH uses the unique ID of the transaction device to process the transaction and, if the selected account has sufficient funds, the TPCH issues a transaction confirmation. Pet. 21–22 (citing Ex. 1005, 6:36–44, 28:26–31, 28:50–29:23; Ex. 1003 ¶¶ 98–100). Petitioner observes that the approved transaction may relate to a purchase made using the web browser or in a retail situation where the user or a store clerk specifies the items to be purchased, where the approval allows the user to complete a financial transaction by allowing the user to receive the purchased items. *Id*. at 22 (citing Ex. 1005, 22:9–15, 28:26–31, 28:34–35; Ex. 1003 ¶ 100). Petitioner's showing as to claim limitation 1e is sufficient, at this stage of the proceeding.

b) Patent Owner's Arguments

Patent Owner argues that the TPCH of Ludtke is not a "third-party trusted authority" because it "is an active participant in transactions between

a user and vendor" rather than simply a "witness" to the transactions. Prelim. Resp. 6. Patent Owner points to examples in Ludtke where the TPCH is "accessing financial accounts to authorize transactions" and "processing transactions." *Id.* at 6–13 (citing Ex. 1005, 3:38–45, 6:41–44, 6:51–55, 7:12–20, 9:28–30, 9:43–51, 21:51–57, 23:50–55, 27:56–58, 27:66–67, 28:58–62, 29:6–14, 29:31–39, 29:46–51, Figs. 16–17). According to Patent Owner, "[t]he TPCH of Ludtke is . . . accessed by the user and the vendor to access a financial account, authorize a transaction, and provide payment," and, thus, "is a very active participant in the transaction, not merely a witness to it." *Id.* at 7; *see also id.* at 9 ("the TPCH becomes an active participant by authorizing the transaction . . . and subsequently performing settlement."), 10 ("By authorizing transactions and transferring funds into the vendor's account, the TPCH is a very active participant in the transactions—it is being accessed by the vendor to authorize a transaction. The TPCH is also accessed by the user to pay the vendor. Being accessed by the vendor and user to be an active participant, the TPCH cannot be the claimed 'third-party trusted authority.'"), 11 ("As the TPCH is an active participant during retail and web transactions by being accessed by the vendor and user, it cannot be the claimed 'third-party trusted authority.'"), 11 ("[T]he TPCH is being accessed to pay the vendor, making the TPCH an active participant in the transaction."), 12 ("[B]y issuing credit to the user, the TPCH is an even more active participant than in the previous method of settlement."), 13 ("The TPCH is thus being accessed to access a user's registered account and to pay the vendor. Notably, the TPCH makes the payment, thereby making it a party to the transaction.").

On the current record, we agree with Petitioner. As Mr. Gray testifies, the parties to Ludtke's transaction are the user and the external retailers and

vendors. Ex. 1003 ¶ 92; Ex. 1005, 9:35–39. In the example of Figure 17, the "user triggers the purchase" and "the vendor . . . will provide the items." Ex. 1005, 28:34–56. The TPCH plays a role in processing or facilitating the transaction. However, we agree with Petitioner, that, in general, the fact that "the TPCH is capable in certain embodiments of settling funds does not make it a 'party' to the transaction because it remains independent of the user, POS, and 'external' vendors." Pet. 18. As noted in the Claim Construction section above, *supra* II.A.1, active participation in a transaction, by itself, does not make an entity a party to that transaction.

Patent Owner (Prelim. Resp. 11) focuses on one embodiment in Ludtke in which "[t]he settlement of funds involves the transfer of the appropriate financial credit into the vendor's account," and "it is assumed that the account is managed completely by the TPCH, and thus the funds transfer is handled completely inside of the TPCH." Ex. 1005, 29:35–39. In another example Patent Owner cites (Prelim. Resp. 12), "the TPCH may act as a proxy for the user, whereby the TPCH takes the funds from the user's account as managed by a third party financial institution, and then issues a funds transfer from the TPCH account to the vendor's account." Ex. 1005, 29:46–51. Although the TPCH in these two examples is described as assisting one or the other of the principal parties to the transaction, in neither case is the TPCH described as the same party as the user or the vendor.

In any case, Petitioner (Pet. 18) relies on Ludtke's "alternative embodiment," in which "the TPCH may issue a funds settlement request to a third party financial institution on behalf of the user, causing the necessary funds to be transferred to the vendor from the users account." Ex. 1005, 29:43–46. Petitioner argues that this example "further confirm[s] that the TPCH is not the vendor/retailor, or even the user's financial institution from

which funds are withdrawn (not a principal party to the transaction, and therefore a third party)." Pet. 18 (citing Ex. 1003 ¶ 93). We agree with Petitioner that, in this example, the TPCH is separate from, and thus a third-party to, the principal parties to the transaction (the user and the vendor) and also a third-party to the financial institution that pays the vendor.

As to this example, Patent Owner argues that "the TPCH is accessed to provide access to the user's account," "that access issues a command to the user's account to make a transfer to the vendor's account," and by "[b]eing accessed to take control of a user's account, the TPCH is an active participant in the transaction, and not a witness." Prelim. Resp. 12. As explained above, however, active participation alone does not make an entity a party to the transaction. Thus, we are not persuaded by Patent Owner's argument.

Patent Owner further argues that "the TPCH is what is being accessed by the user and vendor to gain access to a registered account, ***thereby making it a party to the transaction***." Prelim. Resp. 11. We disagree. In the context presented here where, as noted above for claim limitations 1d and 1e, the user accesses computer software, a website, or a file of the vendor, the user and the vendor are the parties to the transaction. Ex. 1005, 29:29–30 ("Secure distribution of physical (or electronic) content to the user is performed once the transaction is authorized."), 31:41–52. Patent Owner does not explain persuasively why accessing the TPCH (an additional access beyond the access corresponding to claim 1) to gain access (another additional access) to a registered account makes the TPCH a party to the transaction between the user and the vendor.

Patent Owner further argues that by "[p]roviding access to a financial account, the TPCH is no different than the [data and process controller] DPC

from Lapsley that the Office has previously rejected as disclosing a third-party trusted authority." Prelim. Resp. 6; *see also id.* at 11 ("The TPCH performs settlement by providing access to the user's accounts – as did the DPC at issue in the previous IPR denials. Instead of merely providing a listing of accounts, the TPCH takes control of the accounts to perform settlement. The TPCH is thus being accessed to access and take control of a user's account by issuing commands to the user's accounts."). As explained in the Claim Construction section above, *supra* II.A.1, previous panels evaluated Lapsley as presented by a different petitioner and we are not persuaded that we should use that evaluation to further limit the construction of "third-party trusted authority" beyond what the previous panels stated, and beyond what the intrinsic record supports. In any case, Ludtke's TPCH is a third party relative to the user and vendor, the parties to Ludtke's transaction. Moreover, in the embodiment Petitioner relies on, the TPCH is a third party relative to the financial institution holding the user's account. Ex. 1005, 29:43–46. Thus, even if providing access to a financial institution could make the financial institution a party to the transaction, Ludtke's TPCH is still a third party.

In sum, on the current record, Petitioner's evidence is sufficient to show a reasonable likelihood that it would prevail with respect to claim 1 as obvious over Ludtke.

3. Independent Claims 9 and 13; Dependent Claims 3–7, 10, 12, and 14–18

Independent claim 9 is directed to an integrated device with modules that perform functions similar to the steps of claim 1. Independent claim 13 is a system with components that perform functions similar to the steps of

claim 1. Petitioner's arguments and evidence for claims 9 and 13 are similar, and largely incorporate, its arguments for claim 1. Pet. 29–32, 33–37. Patent Owner presents its arguments for claims 1, 9, and 13 together, and only as to the term "third-party trusted authority" appearing in each of these claims. Prelim. Resp. 6–13. For the reasons given for claim 1, Petitioner has shown a reasonable likelihood that it would prevail with respect to claims 9 and 13 as obvious over Ludtke.

Claims 3–7, 10, 12, and 14–18 ultimately depend[5] from claim 1. We have evaluated Petitioner's evidence as to these dependent claims (Pet. 23–29, 32–33, 37–41) and are persuaded, on the current record, that Petitioner has shown a reasonable likelihood that it would prevail with respect to claims 3–7, 10, 12, and 14–18 as obvious over Ludtke. Patent Owner does not yet present separate arguments for the dependent claims. *See* Prelim. Resp.

E. Obviousness of Claims 2 and 11 over Ludtke and Kon

Petitioner contends that claims 2 and 11 would have been obvious over Ludtke and Kon. Pet. 41–51. Claim 2 depends from claim 1 and adds "registering an age verification for the user in association with the ID code." Claim 11 depends from claim 7, which also depends from claim 1, and adds a limitation similar to that of claim 2.

Kon describes examples of identifying a person using a person identification certificate (IDC) which can include information such as fingerprints, retina patterns, voice, etc. Ex. 1006 ¶¶ 173, 241. The IDC can include the age of the user. *Id.* ¶ 234, Fig. 5 (Subject Directory Attributes,

[5] Although the language of certain claims suggests that the Patentee may have intended certain claims to have different dependencies, we rely on the dependencies listed in the issued patent.

including "Personal information . . . used to authenticate subject Age, sex, etc."). The user registers personal information with a person identification certificate authority (IDA), which issues the IDC to the user. *Id.* ¶ 178. Service providers verify the authenticity of the user based on the IDC. *Id.*

Petitioner contends that Kon describes registering and storing a user's age in association with a user device's device ID. Pet. 43–46 (citing Ex. 1006 ¶¶ 194, 234, 241, 264–265, Figs. 5, 9; Ex. 1003 ¶¶ 66–70). Petitioner argues that "[t]he user's age, like the biometric information, provides another data point for identifying the user," and would have been especially useful when a transaction has an age minimum, such as purchasing alcohol or cigarettes. *Id.* at 50 (citing Ex. 1003 ¶¶ 152–153). Accordingly, Petitioner argues, a skilled artisan would have registered a user's age, as taught by Kon, with Ludtke's device ID to facilitate age-prohibitive transactions. *Id.* Petitioner makes the same arguments for claim 11. *Id.* at 51 (citing Ex. 1003 ¶ 155). Patent Owner does not yet provide separate arguments for claims 2 and 11. *See* Prelim. Resp.

On the current record, Petitioner has shown sufficiently that Kon teaches the additional limitations of claims 2 and 11, and that a skilled artisan would have had reasons, with rational underpinning, for combining Ludtke and Kon.

III. DISCRETIONARY DENIAL

A. Discretion under 35 U.S.C. § 314(a)

Institution of *inter partes* review is discretionary. *See Cuozzo Speed Techs., LLC v. Lee*, 136 S. Ct. 2131, 2140 (2016) ("[T]he agency's decision to deny a petition is a matter committed to the Patent Office's discretion."); *Harmonic Inc. v. Avid Tech., Inc.*, 815 F.3d 1356, 1367

(Fed. Cir. 2016) ("[T]he PTO is permitted, but never compelled, to institute an IPR proceeding."); 35 U.S.C. § 314(a).

Patent Owner contends that we should deny the Petition based on the advanced state of the Texas case, pursuant to *Apple Inc. v. Fintiv, Inc.*, IPR2020-00019, Paper 11 (PTAB Mar. 20, 2020) (precedential) ("*Fintiv*"). Prelim. Resp. 20–22. The Board has held that the advanced state of a parallel district court action is a factor that may weigh in favor of denying a petition under § 314(a). *See NHK Spring Co. v. Intri-Plex Techs., Inc.*, IPR2018-00752, Paper 8 at 20 (PTAB Sept. 12, 2018) (precedential); Consolidated Trial Practice Guide ("TPG")[6] at 58 & n.2 (Nov. 2019). We consider the following factors to assess "whether efficiency, fairness, and the merits support the exercise of authority to deny institution in view of an earlier trial date in the parallel proceeding":

1. whether the court granted a stay or evidence exists that one may be granted if a proceeding is instituted;
2. proximity of the court's trial date to the Board's projected statutory deadline for a final written decision;
3. investment in the parallel proceeding by the court and the parties;
4. overlap between issues raised in the petition and in the parallel proceeding;
5. whether the petitioner and the defendant in the parallel proceeding are the same party; and
6. other circumstances that impact the Board's exercise of discretion, including the merits.

Fintiv at 5–6. In evaluating these factors, we "take[] a holistic view of whether efficiency and integrity of the system are best served by denying or

[6] Available at https://www.uspto.gov/TrialPracticeGuideConsolidated.

instituting review." *Id.* at 6. Upon consideration of these factors, we decline to exercise our discretion to deny the Petition.

1. Whether the court granted a stay or evidence exists that one may be granted if a proceeding is instituted

The *Fintiv* panel indicated that, in previous Board decisions, the existence of a district court stay pending Board resolution of an *inter partes* review has weighed strongly against discretionary denial, while a denial of such a stay request sometimes weighs in favor of discretionary denial. *Fintiv*, Paper 11 at 6–8.

Neither party indicates that a stay has been requested or granted in the Texas case. Prelim. Resp. 20; Prelim. Reply 1; Prelim. Sur-reply 3. Determining how the Texas court might handle a motion for stay, that has not yet been filed, invites conjecture. It would be improper to speculate, at this stage, what the Texas court might do regarding a motion to stay, and given the particular circumstances of this case. Accordingly, this factor is neutral to the exercise of our discretion. *Cf. Sand Revolution II, LLC v. Continental Intermodal Group – Trucking LLC*, IPR2019-01393, Paper 24 at 7 (PTAB June 16, 2020) (informative) ("In the absence of specific evidence, we will not attempt to predict how the district court in the related district court litigation will proceed because the court may determine whether or not to stay any individual case, including the related one, based on a variety of circumstances and facts beyond our control and to which the Board is not privy."); *Apple Inc. v. Fintiv, Inc.*, IPR2020-00019, Paper 15 at 12 (PTAB May 13, 2020) (informative) ("*Fintiv II*") ("We decline to infer, based on actions taken in different cases with different facts, how the District Court would rule should a stay be requested by the parties in the parallel case here. This factor does not weigh for or against discretionary denial in this case").

2. Proximity of the court's trial date to the Board's projected statutory deadline for a final written decision

The Texas court has scheduled February 27, 2025, as the date for Jury Selection and Trial. Ex. 2009 (Scheduling Order), 3. A trial date of February 27, 2025, would be approximately five months prior to our expected statutory deadline for a final written decision. However, "[a] court's scheduled trial date . . . is not by itself a good indicator of whether the district court trial will occur before the statutory deadline for a final written decision." Katherine K. Vidal, *Interim Procedure for Discretionary Denials in AIA Post-grant Proceedings with Parallel District Court Litigation*, at 8 (June 21, 2022) (*Fintiv* Guidance). "Parties may present evidence regarding the most recent statistics on median time-to-trial for civil actions in the district court in which the parallel litigation resides[] for the PTAB's consideration." *Id.* at 8–9. Petitioner argues that the Texas court's average time to trial suggests that trial will be around June or July 2025, close to the time that we would be expected to issue a final written decision. Prelim. Reply 2 (citing Ex. 1022, 5). Patent Owner agrees that the statistics suggest a trial date in June or July of 2025, as the Texas case was filed on May 2, 2023. Prelim. Resp. 19–20; Prelim. Sur-reply 4.

The statistics provided by the parties show a median time to trial, from filing, to be 25.8 months in the Texas court. Ex. 1022, 5. We agree with the parties that the statistics suggest that trial in the Texas court will occur approximately in June or July of 2025, which is around when we would be expected to issue a final written decision. According to the *Fintiv* Guidance, "[t]he PTAB will weigh this factor against exercising discretion to deny institution under *Fintiv* if the median time-to-trial is around the same time or after the projected statutory deadline for the PTAB's final written

decision." *Fintiv* Guidance 9. Accordingly, this factor weighs against exercise of our discretion to deny the Petition.

3. Investment in the parallel proceeding by the court and the parties

Patent Owner argues that the Texas court and parties have completed substantial work because fact discovery in the Texas court is expected to end on August 16, 2024.[7] Prelim. Resp. 21 (citing Ex. 2012, 16). Patent Owner further argues that the Texas court has issued a claim construction order. Prelim. Sur-reply 4; *see also* Ex. 3002 (Jan. 23, 2024, Claim Construction Order in Texas case). Patent Owner does not explain the relevance of the Texas court's claim construction order to the patentability issues we are being asked to resolve.

Petitioner contends that the parties have not completed fact or expert discovery or briefing on dispositive invalidity issues in the Texas case and that, under these circumstances, significant work remains. Prelim. Reply 2–3. We agree with Petitioner. It appears that the Texas court and the parties have made only minimal investment so far as to the patentability issues we are considering. At this stage of the proceeding, the Texas court's claim construction order appears to have little bearing on the patentability

[7] Patent Owner also argues that the Texas court has entered discovery with the same asserted patents in Patent Owner's litigation against Microsoft, and is also familiar with the patents and technology because of a prior case involving Patent Owner and Samsung. Prelim. Resp. 21. However, this is of little relevance, as it does not account for investments made by the parties to this proceeding. Patent Owner also notes that there are pending reexaminations of the '730 patent and its family members. *Id.* at 20; *see also id.* at 22 (raising the reexaminations again for factor 6). However, this is similarly of little relevance to investment by the parties and the court in the Texas case.

issues we have been asked to consider. Ex. 3002. Accordingly, this factor weighs against exercise of our discretion to deny the Petition.

4. Overlap between issues raised in the petition and in the parallel proceeding

Patent Owner argues that Petitioner "has asserted obviousness of the patent at issue as a defense [in the Texas case] and will undoubtedly raise the same prior art references." Prelim. Resp. 21 (citing Ex. 2013). As Petitioner points out, Patent Owner does not explain further why it reaches this conclusion. Prelim. Reply 3. Petitioner also argues that the Petition challenges significantly more claims than the claims at issue in the Texas case and, thus, this factor should weigh against discretionary denial. *Id.* At this stage of the proceeding, Patent Owner offers little more than speculation that there will be significant overlap between this proceeding and the Texas case.

Moreover, Petitioner

> stipulates that if the Patent Trial and Appeal Board institutes an IPR in the above-captioned proceedings on the grounds presented in the Petitions, [Petitioner] will not pursue an invalidity defense in the [Texas case] that the patent claims subject to the instituted IPRs are invalid based on the same grounds as in the petitions or even on the references that are the bases for those grounds (e.g., Ludtke and Kon).

Ex. 1025. Similar to the stipulation offered in *Sand Revolution*, this stipulation "mitigates to some degree the concerns of duplicative efforts between the district court and the Board, as well as concerns of potentially conflicting decisions." IPR2019-01393, Paper 24 at 12. This stipulation gives us additional confidence that any overlap between this proceeding and the Texas case will not be substantial.

In the Preliminary Sur-reply, Patent Owner argues that the "overlap between the issues raised in the 053 Reexam favors denial." Prelim. Sur-reply 5. Although we consider the '053 reexam in our discussion of discretion under 35 U.S.C. § 325(d), below, we are not persuaded that the overlap raises issues significant issues under discretion under 35 U.S.C. § 314(a). Patent Owner further argues that "[a] similar risk exists with respect to the pending litigation against Microsoft – in that Microsoft has also asserted that Ludtke discloses a 'third-party trusted authority.'" *Id.* This unrelated case similarly has only marginal relevance here.

As Patent Owner's allegation of potential overlap is largely speculative and is mitigated by Petitioner's stipulation, this factor weighs against exercising our discretion to deny the Petition.

5. Whether the petitioner and the defendant in the parallel proceeding are the same party

If the petitioner here was unrelated to the defendant in the parallel proceeding, that might weigh against discretionary denial. *See Fintiv*, Paper 11 at 13–14. Here, however, Petitioner is the defendant in the parallel proceeding. This fact could weigh either in favor of, or against, exercising discretion to deny institution, depending on which tribunal was likely to address the challenged patent first. Given the current information concerning the relative timing of the proceedings, we weigh this factor as neutral.

6. Other circumstances that impact the Board's exercise of discretion, including the merits.

Additional factors we can consider include the merits.

> For example, if the merits of a ground raised in the petition seem particularly strong on the preliminary record, this fact has favored institution. In such cases, the institution of a trial may

> serve the interest of overall system efficiency and integrity because it allows the proceeding to continue in the event that the parallel proceeding settles or fails to resolve the patentability question presented in the PTAB proceeding.

Fintiv, Paper 11 at 14–15 (footnotes omitted). The parties take opposing positions on whether the merits presented in the Petition are compelling. Prelim. Reply 4–5; Prelim. Sur-reply 6–7. *See also Fintiv* Guidance at 4 ("compelling, meritorious challenges will be allowed to proceed at the PTAB even where district court litigation is proceeding in parallel."). However, "in circumstances where the Board determines that the other *Fintiv* factors 1–5 do not favor discretionary denial, the Board shall decline to discretionarily deny under *Fintiv* without reaching the compelling merits analysis." *CommScope Tech. v. Dali Wireless, Inc.*, IPR2022-01242, 4–5 (PTAB Feb. 27, 2023) (on Director review). Because factors 1–5 do not favor discretionary denial under *Fintiv*, we do not reach whether the merits are compelling.

7. Holistic Assessment of Fintiv Factors

We consider the above factors and take "a holistic view of whether efficiency and integrity of the system are best served by denying or instituting review." *Fintiv*, Paper 11 at 6. The proximity of our expected final written decision is close to the expected trial date in the Texas case, the parties' and the Texas court's investment has been minimal so far, and any overlap between the two proceedings likely will not be substantial, all weighing against denial. The remaining factors are neutral. Taking a holistic view, we decline to exercise our discretion to deny the Petition under Section 314(a) based on *Fintiv*.

B. Discretion under 35 U.S.C. § 325(d)

Pursuant to 35 U.S.C. § 325(d), in determining whether to institute an *inter partes* review, "the Director may take into account whether, and reject the petition or request because, the same or substantially the same prior art or arguments previously were presented to the Office." In evaluating arguments under § 325(d), we use

> [a] two-part framework: (1) whether the same or substantially the same art previously was presented to the Office or whether the same or substantially the same arguments previously were presented to the Office; and (2) if either condition of [the] first part of the framework is satisfied, whether the petitioner has demonstrated that the Office erred in a manner material to the patentability of challenged claims.

Advanced Bionics, LLC v. MED-EL Elektromedizinische Geräte GmbH, IPR2019-01469, Paper 6 at 8 (PTAB Feb. 13, 2020) (precedential). Moreover, in evaluating these arguments,

> we have weighed some common *non-exclusive* factors, such as:
>
> (a) the similarities and material differences between the asserted art and the prior art involved during examination;
>
> (b) the cumulative nature of the asserted art and the prior art evaluated during examination;
>
> (c) the extent to which the asserted art was evaluated during examination, including whether the prior art was the basis for rejection;
>
> (d) the extent of the overlap between the arguments made during examination and the manner in which Petitioner relies on the prior art or Patent Owner distinguishes the prior art;
>
> (e) whether Petitioner has pointed out sufficiently how the Examiner erred in its evaluation of the asserted prior art; and

> (f) the extent to which additional evidence and facts presented in the Petition warrant reconsideration of the prior art or arguments.

Becton, Dickinson & Co. v. B. Braun Melsungen AG, IPR2017-01586, Paper 8 at 17–18 (PTAB Dec. 15, 2017) (precedential as to Section III.C.5, first paragraph) (formatting supplied). "If, after review of factors (a), (b), and (d), it is determined that the same or substantially the same art or arguments previously were presented to the Office, then factors (c), (e), and (f) relate to whether the petitioner has demonstrated a material error by the Office." *Advanced Bionics*, IPR2019-01469, Paper 6 at 10.

Petitioner argues that institution is appropriate because neither Ludtke nor Kon was considered by the Examiner during prosecution or in the earlier-filed IPR (IPR2021-01447). Pet. 54. Petitioner acknowledges that Ludtlke was cited in the '053 reexam, but argues that it was only cited in combination with various other references, and there has not yet been a reexamination certificate issued in the '053 reexam. *Id.* at 54–55. Petitioner further argues that it presents Ludtke in a light materially different from that presented in the '053 reexam. *Id.* at 56. Petitioner further argues that the testimony of Mr. Gray, offered in support of the Petition, was not considered by the Office previously. *Id.* at 55–56.

Patent Owner argues that we should exercise our discretion to deny the Petition pursuant to Section 325(d) in light of the Samsung DDI and the pending reexaminations (including the '053 reexam). Prelim. Resp. 13–14.

Regarding the Samsung DDI, Patent Owner argues that the Board considered Lapsley (Ex. 3001), which Patent Owner contends is cumulative of Ludtke. *Id.* at 15–16. Specifically, Patent Owner argues that "both Lapsley and Ludtke teach a method of verifying a user during authentication

of **an integrated device**," and that "Ludtke fails to teach the claimed 'third-party trusted authority' for precisely the same reason that Lapsley failed to teach it." *Id.* (citing Ex. 1007, 14–15). According to Patent Owner,

> Ludtke and Lapsley solve the same problem using the same function: both permit the entity that authenticates the user to also be, as the name TPCH suggests, the "clearing house," which is a party to the transaction. These two references are thus entirely cumulative and both run contrary to one of the main aspects of the claims of the Patent: a third party trusted authority.

Id. at 16.

We are not persuaded by Patent Owner. As to *Becton, Dickinson* factors (a), (b), and (d), the Samsung DDI, the decision to which Patent Owner asks us to defer, is a preliminary decision where the panel evaluated whether the petitioner in that proceeding presented evidence in such a manner as to show a reasonable likelihood that a challenged claim was unpatentable. The Samsung DDI panel did not purport to make conclusive findings regarding Lapsley; rather, it determined that the manner in which Samsung presented Lapsley, in combination with two other references, was not sufficient to show a reasonable likelihood of success. Ex. 1007, 21–26. Samsung appeared to allege that Lapsley's DPC was both the third-party trusted authority and the application to be accessed, which the panel decided was insufficient to show a reasonable likelihood of unpatentability. *Id.* at 24–25. However, consistent with the Board's role as evaluating allegations as presented in a petition, the Samsung DDI panel did not perform its own obviousness mapping of Lapsley to the challenged claims. *See Sirona Dental Sys. GmbH v. Institut Straumann AG*, 892 F.3d 1349, 1356 (Fed. Cir. 2018) ("[T]he statute tells us that the petitioner's contentions, not the Director's discretion, define the scope of the litigation all the way from

institution through to conclusion. It would thus not be proper for the Board to deviate from the grounds in the petition and raise its own obviousness theory.") (internal citation and quotation marks omitted).

In this proceeding, Petitioner presents Ludtke very differently than Samsung presented Lapsley, alleging that the TPCH is a trusted-third party authority and that a website or computer software of a retailer or vendor is the application the user seeks to access through the transaction. Pet. 13–22. At least on the preliminary record of this proceeding, Petitioner shows that Ludtke teaches the aspect of claim 1 that Samsung failed to show (or allege clearly) in its proposed combination, which included Lapsley. Thus, factors (a), (b), and (d) do not suggest that Petitioner's prior art and arguments have been considered previously by the Office.

We conclude that the same or substantially the same art and arguments were not presented to the Office previously in the Samsung proceeding. Thus, we need not evaluate whether the Samsung DDI panel erred in a manner material to the patentability of the challenged claims. *See Advanced Bionics,* IPR2019-01469, Paper 6 at 8.

As to the pending reexaminations, Patent Owner argues that Ludtke is cited in each of the reexaminations as disclosing a third-party trusted authority, and specifically the '053 reexam involves the '905 Patent. Prelim. Resp. 19. Patent Owner argues that Petitioner has failed to show Examiner error in the reexaminations. *Id.* Petitioner responds that the "*Becton Dickson* factors are 'not well suited' for cases where the examiner's treatment of prior art is consistent with petitioner's" treatment. Prelim. Reply 7 (citing *Juniper Networks, Inc. v. Monarch Networking Solutions LLC*, IPR2024-00175, Paper 12 at 27–28 (PTAB May 8, 2024). Additionally, Petitioner argues that the Petition relies on Ludtke in a single

reference obviousness challenge, and in combination with Kon, such that Ludtke is relied upon for similar elements in both proceedings, but that does not make the arguments substantially similar. *Id*.

Patent Owner argues that we should defer to a final office action issued in the ’053 reexam, arguing that it provides that “Ludtke does not explicitly describe the ‘transaction device information’ provided to the TPCH.” Prelim. Sur-reply 7 (citing Ex. 1024, 13). However, Patent Owner admits that the Examiner in the ’053 reexam has found that Ludtke’s TPCH is a third-party trusted authority, argues that “the Examiner’s determination is at odds with the Board’s reasoned application of its prior construction,” and notes that it has appealed the Examiner’s decision. *Id.* at 2–3 (citing Ex. 1024, 24). As we explain above, we agree with the Examiner’s finding that Ludtke teaches a third-party trusted authority. Nevertheless, Patent Owner contends that the reexamination decision in the ’053 reexam is incorrect, has appealed it, and is seeking to change its outcome. Thus, Patent Owner does not persuasively argue that it is a decision to which we should defer. Thus, we decline to exercise our discretion to deny the Petition based on the pending reexaminations.

IV. CONCLUSION

Petitioner has shown a reasonable likelihood that it would prevail with respect to at least 1 of the claims challenged in the Petition.

Our factual findings, conclusions of law, and determinations at this stage of the proceeding are preliminary, and based on the evidentiary record developed thus far. This is not a final decision as to the patentability of the claims for which *inter partes* review is instituted. Our final decision will be based on the record as fully developed during trial.

V. ORDER

In consideration of the foregoing, it is hereby:

ORDERED that pursuant to 35 U.S.C. § 314(a), an *inter partes* review is instituted as to claims 1–7 and 9–18 of the ’905 Patent on the grounds set forth in the Petition; and

FURTHER ORDERED that pursuant to 35 U.S.C. § 314(c) and 37 C.F.R. § 42.4, notice is hereby given of the institution of a trial; the trial will commence on the entry date of this decision.

PETITIONER:

Erika H. Arner
Kara A. Specht
Cory C. Bell
Safiya Aguilar
Shawn Chang
FINNEGAN, HENDERSON, FARABOW, GARRETT & DUNNER, LLP
erika.arner@finnegan.com
kara.specht@finnegan.com
cory.bell@finnegan.com
safiya.aguilar@finnegan.com
shawn.chang@finnegan.com
Google-Proxense-IPRs@finnegan.com

PATENT OWNER:

David L Hecht
James Zak
HECHT PARTNERS LLP
dhecht@hechtpartners.com
jzak@hechtpartners.com
proxense@hechtpartners.com