United States Patent [19]

Murphy

[11] **4,423,671**

[45] **Jan. 3, 1984**

[54] **FLOATING KNIFE ASSEMBLY FOR A MEAT DEFATTING MACHINE WITH POSITIVE BLADE POSITION**

[76] Inventor: **Robert P. Murphy,** 1807 Commercial St., Joseph, Mo. 64503

[21] Appl. No.: **491,938**

[22] Filed: **May 5, 1983**

Related U.S. Application Data

[63] Continuation-in-part of Ser. No. 281,006, Jul. 6, 1981, Pat. No. 4,393,761.

[51] **Int. Cl.**[3] **A22C 17/12**

[52] **U.S. Cl.** **99/486;** 83/870; 83/874; 99/589; 99/590

[58] **Field of Search** 99/485, 486, 537, 538, 99/539, 540, 584, 489–492, 588–591; 83/870, 871, 873, 874; 17/1, 21, 62

[56] **References Cited**

U.S. PATENT DOCUMENTS

3,249,139	5/1966	Runnells, Jr. et al.	99/589
3,504,721	4/1970	Townsend	99/589
3,559,707	2/1971	Townsend	99/589
3,844,207	10/1974	Townsend	99/589
4,123,959	11/1978	Schill	99/589 X
4,188,870	2/1980	Schill	99/589
4,246,837	1/1981	Chenery	99/486 X
4,292,710	10/1981	Townsend	99/589 X

Primary Examiner—Timothy F. Simone
Attorney, Agent, or Firm—Litman, Day & McMahon

[57] **ABSTRACT**

A floating knife assembly with positive blade positioning for use with a meat defatting machine to trim a portion of a layer of fat from a piece of meat while leaving a desired thickness of fat layer thereon.

The knife assembly includes a gauge plate which engages the piece of meat, riding on an upper surface thereof as the meat is urged toward the knife. The gauge plate and knife are interconnected by a linkage system comprising a gauge plate position sensor and a power ram which urges the knife to a desired position relative to the piece of meat dependent upon the position of the gauge plate. The knife is securely locked into position as an individual piece of meat is urged therepast assuring that a constant thickness of fat is retained on the meat.

6 Claims, 14 Drawing Figures

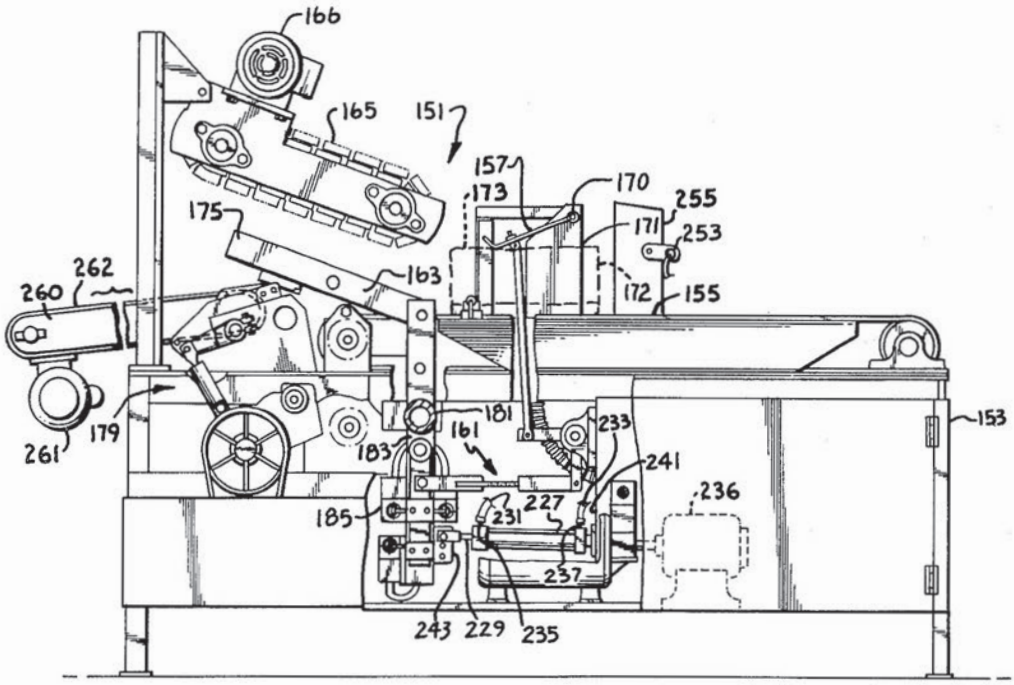

Fig. 1.

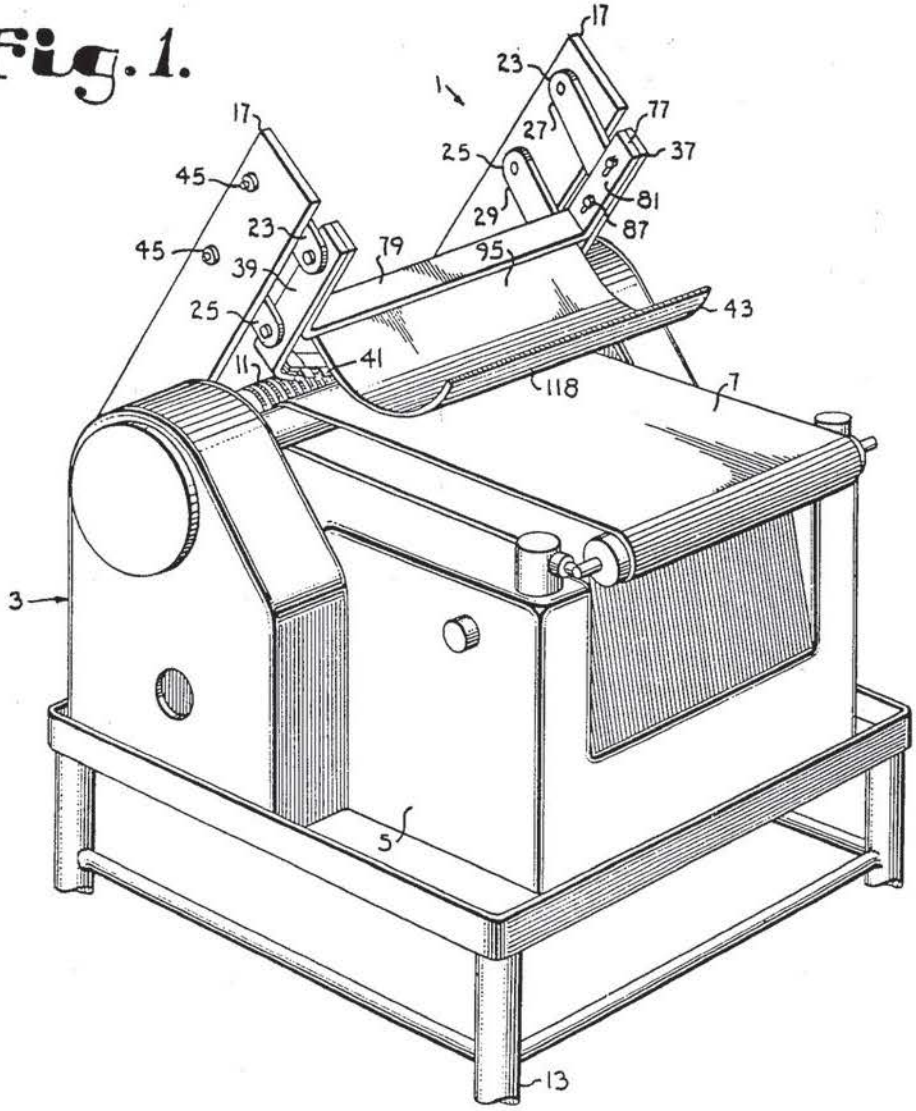

Fig. 4.

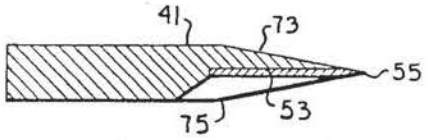

Fig. 5.

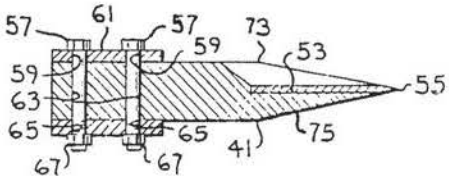

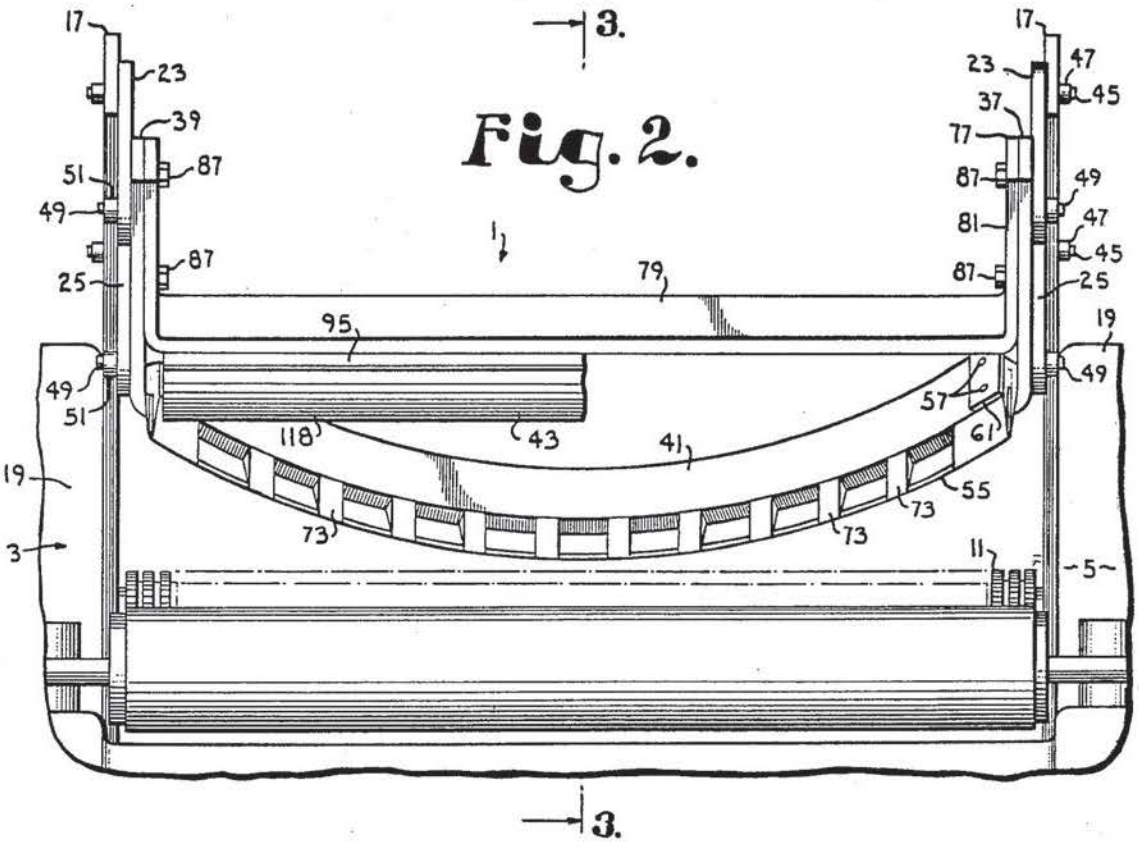

Fig. 2.

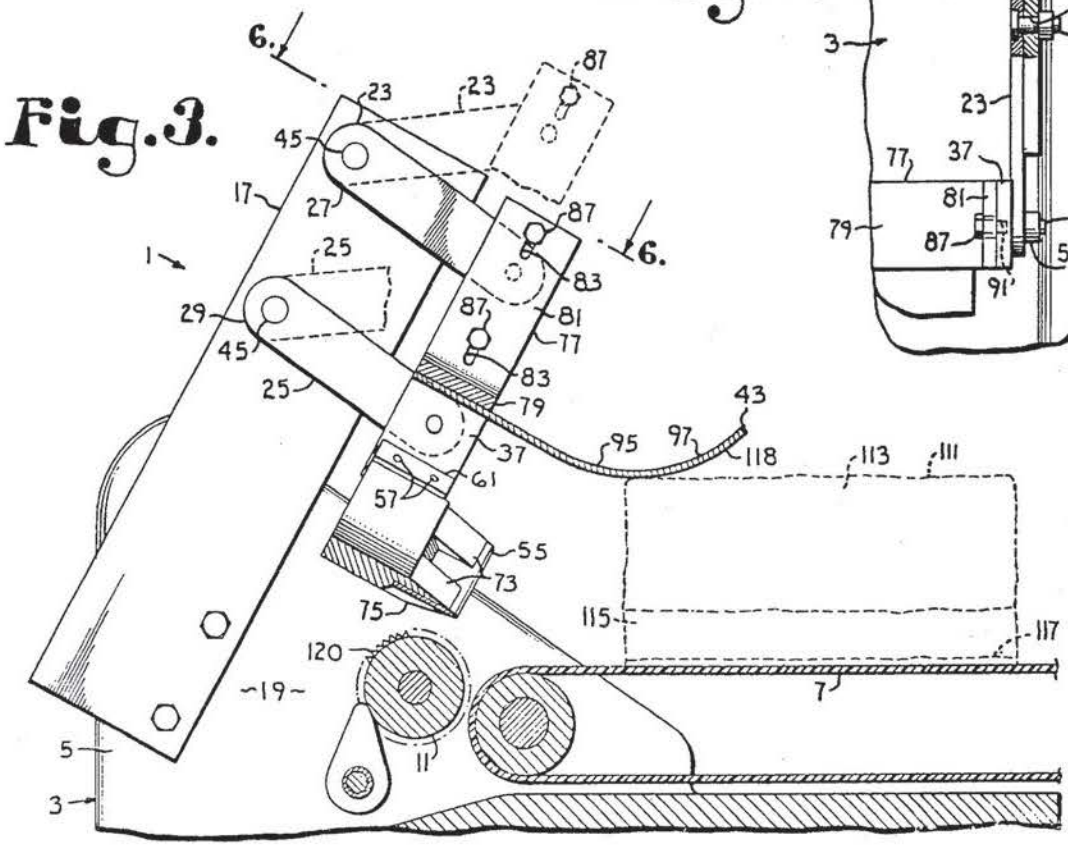

Fig. 3.

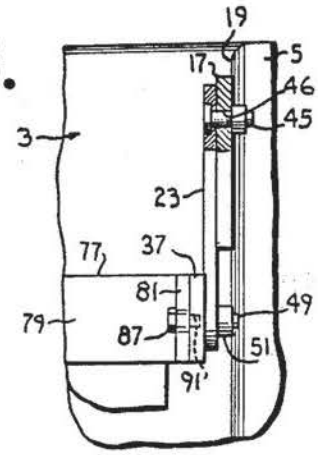

Fig. 6.

Fig. 7.

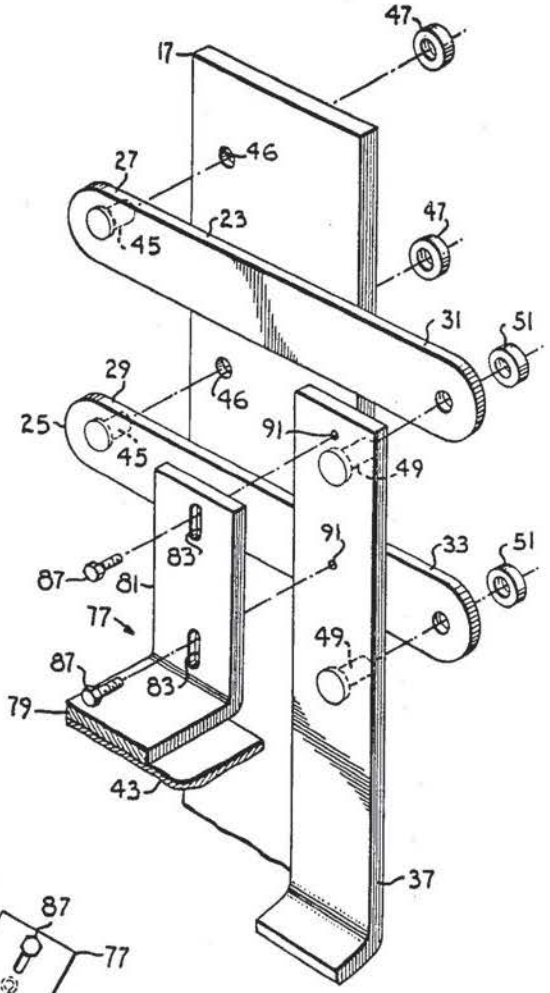
47
17
46
27
23
45
47
31
51
29
46
25
45
91
49
91
33
51
83
87
81
77
49
87
83
79
43
37

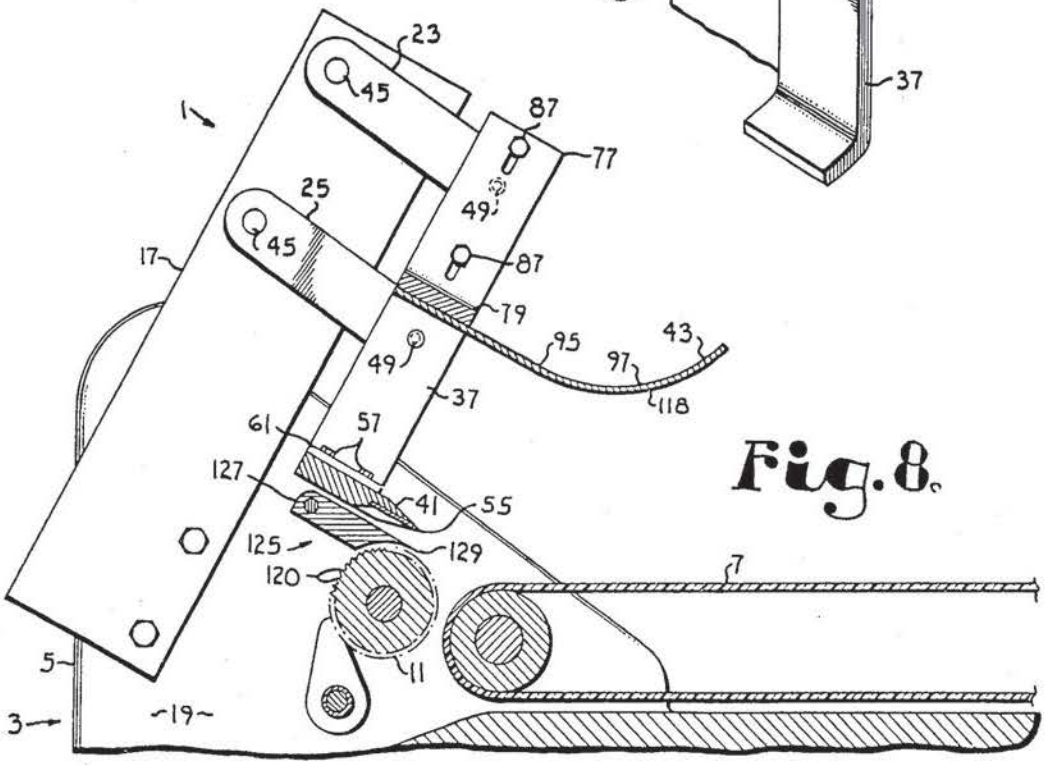
23
45
1
87
77
25
49
45
17
87
79
95
43
49
97
37
118
61
57
127
41
55
125
129
120
7
5
11
3
19

Fig. 8.

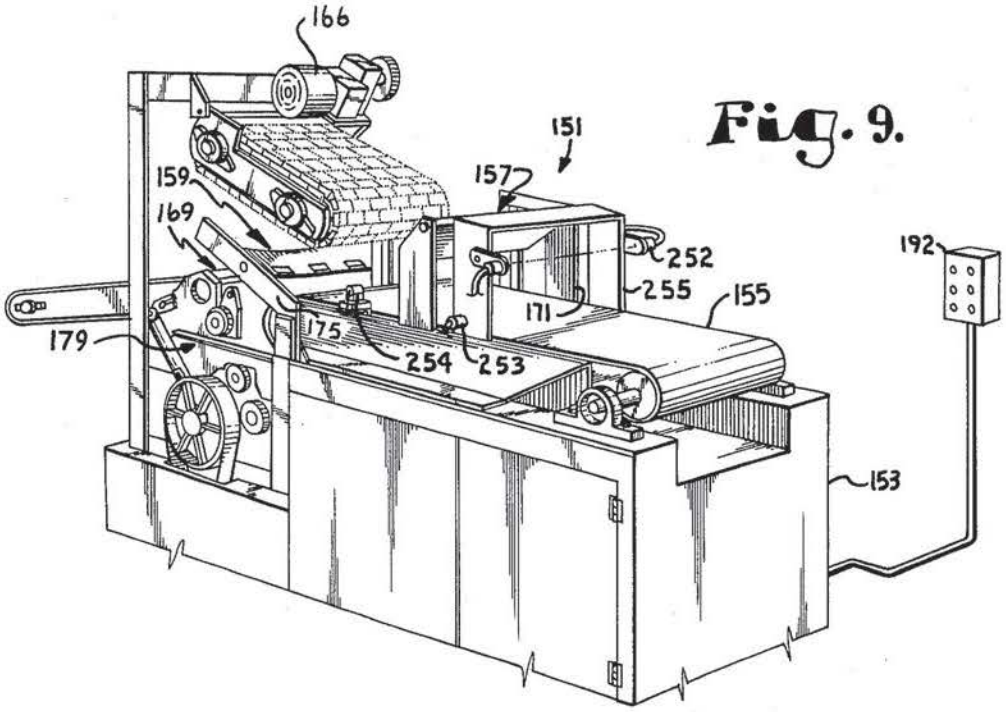
166
151
157
159
169
252
255
155
192
171
175
179
254
253
153

Fig. 9.

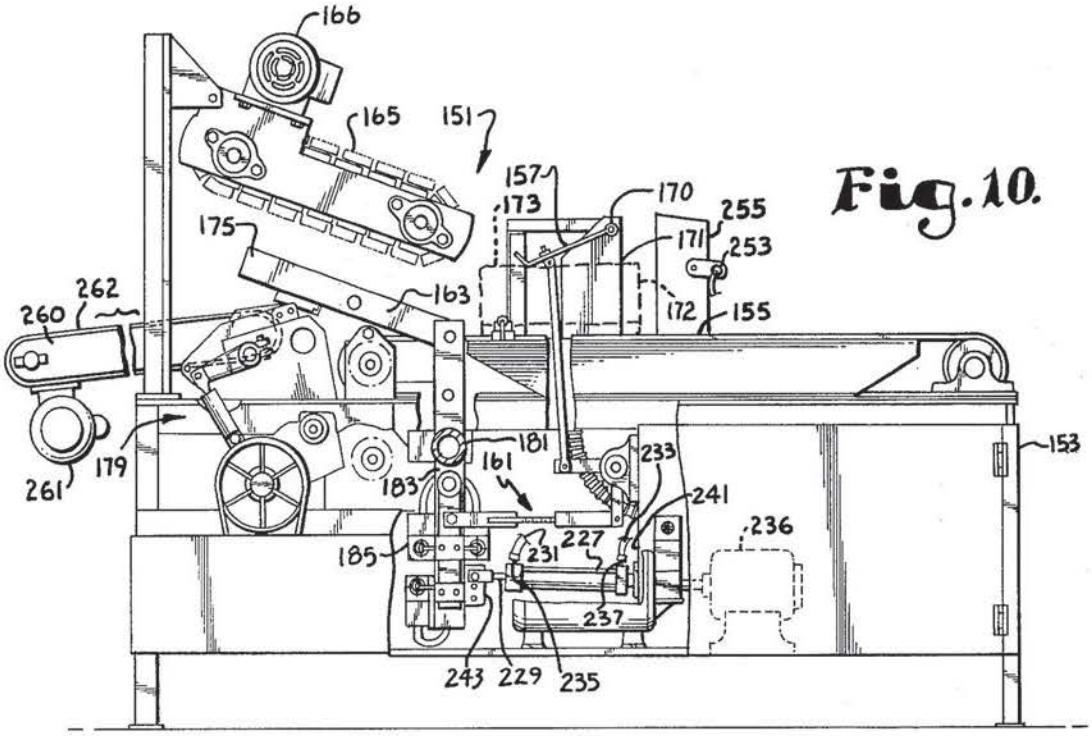
166
165
151
157
173
170
255
171
253
175
163
172
155
262
260
181
161
233
153
179
261
183
241
236
185
231
227
237
243
229
235

Fig. 10.

Fig. 11.

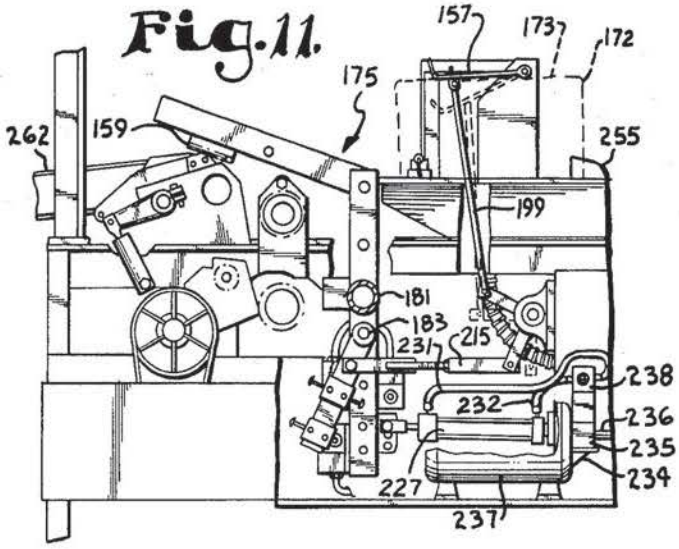

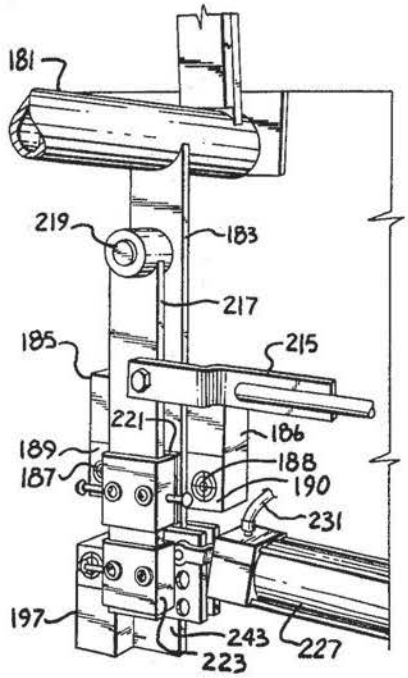

Fig. 13.

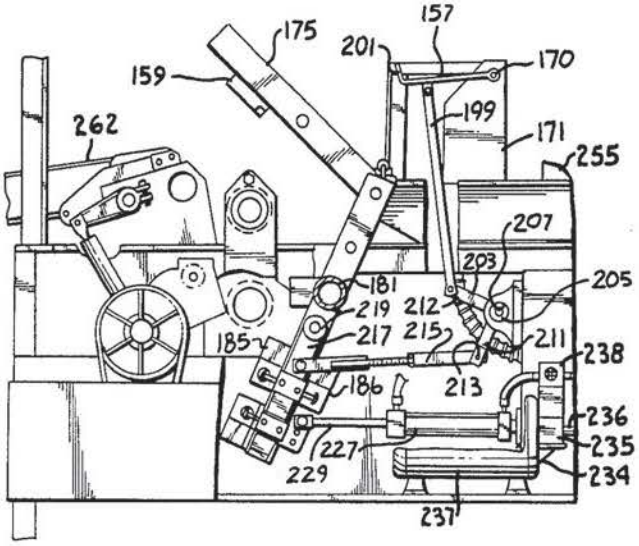

Fig. 12.

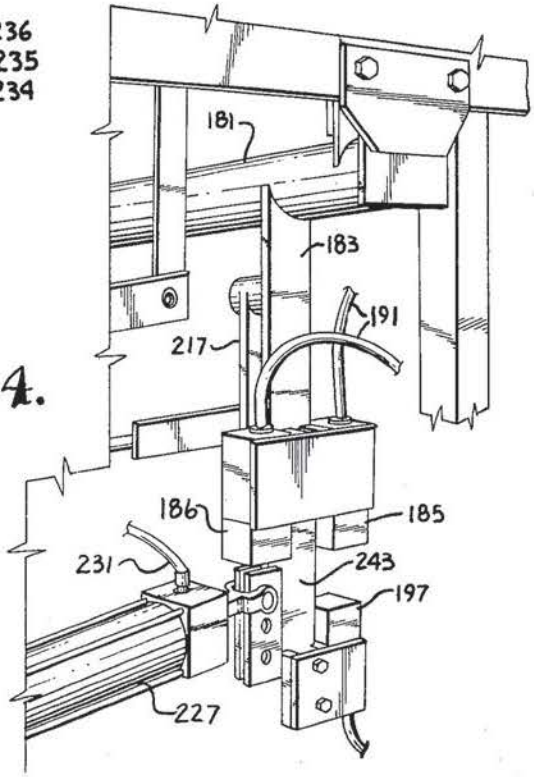

Fig. 14.

FLOATING KNIFE ASSEMBLY FOR A MEAT DEFATTING MACHINE WITH POSITIVE BLADE POSITION

CROSS-REFERENCE TO RELATED APPLICATION

This application is a continuation-in-part of U.S. Pat. application Ser. No. 281,006, filed July 6, 1981, entitled Floating Knife Assembly For a Meat Defatting Machine, now U.S. Pat. No. 4,393,761.

BACKGROUND OF THE INVENTION

This invention relates to meat defatting machines in general and in particular, to such machines which include thereon, a floatable defatting knife.

In the meat packing industry defatting machines are used which include a defatting knife to trim an excess portion of a fat layer from a large piece of meat such as a shoulder ham (Boston Butt) or the like prior to selling the resulting meat product to a customer. Some of these machines also incorporate a deskinning knife which allows an outer skin layer attached to the fat to be removed while simultaneously removing the excess portion of the fat layer.

In most instances, the meat packing company leaves a certain thickness of fat layer on the resulting meat product. The thickness of the fat layer so remaining is subject to an agreement between the meat packing company and its customers. Usually penalties are involved if the meat packer furnishes meat which has a fat layer thickness which exceeds the specified acceptable amount. Further, it is economically desirable to assure that the remaining fat layer cover as close as possible to or equals the acceptable thickness. Therefore, it is desirous when trimming portions of the fat layer from each piece of meat to leave the desired thickness of fat layer on the meat in the most exact manner possible.

It has been found that butchered animals such as hogs or cows that are of the same age group generally exhibit, on each particular cut of meat therefrom, a red meat thickness that is generally constant for the age group of animal. However, the thickness of the fat layer in a given age group can vary depending upon the nature of the feed the particular animal was fed. For example, corn fed animals will display a thicker fat layer than other animals of the same age group which were raised on milo or other feed rations.

The typical meat defatting machine will include a conveyor or the like which will rapidly present to a defatting knife successive cuts of meat. These successive cuts of meat typically are from animals of the same age group but as stated, do not have a constant thickness of fat layer although they do have a generally consistant thickness of red meat layer. Further, these successive pieces of meat are presented to the defatting knife in an orientation wherein the fat layer is resting on a conveyor with the red meat layer facing upwardly.

Typical examples of the prior art have shown machines which have manually adjustable defatting knives wherein an operator of the defatting machine will observe a piece of meat as it approaches the defatting knife, noting the thickness of the fat layer thereon, and attempt to manually adjust the height that the defatting knife is positioned above the conveyor surface to leave a constant thickness of fat layer on each successive piece of meat.

Because of the rapid speed in which the pieces of meat are conveyed to the defatting machine, it is impossible for an operator to continually and accurately adjust the defatting knife for each successive piece of meat.

The device originally disclosed in the parent of the present application was successful in automatically positioning the knife blade such that it engaged each successive piece of meat as it was urged therepast at a proper position relative to the lean meat-fat juncture. However, it has been found that the blade has a tendency to continue to float relative to the piece of meat after engaging the latter causing an unevenness in the layer of fat remaining of the lean meat.

SUMMARY OF THE INVENTION

In a first embodiment of the present invention a floatable defatting knife assembly is provided to be used in conjunction with a meat defatting machine. The floatable knife assembly includes support brackets for the knife, a linkage system, and a knife and gauge plate mounted on the linkage system. The gauge plate is mounted above the knife and the distance between the gauge plate and the knife is selectively adjustable for use with cuts of meat having varying red meat thicknesses and for leaving a desired thickness of a fat layer on the red meat. The knife assembly is mounted on a defatting machine which includes a conveyor to convey the pieces of meat toward the defatting knife and a gripper roller having longitudinal teeth or serrations thereon which engages the piece of meat propelling it past the defatting knife.

When a piece of meat approaches the defatting knife on the conveyor, it will engage a bottom surface of the gauge plate forcing the gauge plate and floatable knife upwardly a certain vertical distance depending upon the total thickness of the piece of meat. The distance between the gauge plate and the knife itself has been adjusted to equal the thickness of the red meat portion of the piece of meat and the allowable thickness of the fat layer portion to be left on the meat. As the meat is urged by the gripping roller past a knife blade, a portion of the fat layer is separated from the piece of meat leaving the desired thickness of fat layer on the red meat. After the piece of meat progresses past the knife assembly, gravity will urge the knife assembly downwardly in position to engage the next piece of meat.

In a second embodiment of the invention as set forth herein, the floating knife assembly has a positive blade lock means to lock the knife blade in position relative to a conveyor moving the meat during the period each successive piece of meat is being cut thereby assuring that a consistant layer of fat remains attached to each successive piece of meat across the entire piece of meat provided a gauge plate associated therewith does not move substantially.

The floating knife assembly in the second embodiment includes the gauge plate pivotally supported at a front end thereof above a conveyor means by support stands. A rear edge of the gauge plate engages and rides on a top surface of the successive pieces of meat. The guage plate rear edge has a link attached thereto which includes a position indicator incorporated therewith.

A knife blade is attached to the housing above the conveyor at a position generally adjacent a gripping roller by opposed support members which pivot about an axis normal to the motion of meat past the knife blade. The support members are attached to the housing

at a point spaced from the point of attachment of the knife blade to the support members. The position of the knife blade relative to the conveyor is changed by pivoting the support members about the pivot point.

A two-way power ram is connected to the knife blade support means to provide the impetus to rotate the arms. When the support arms have been rotated to a desired position a valve controlling hydraulic fluid to the ram is closed prohibiting movement of the support arms and securely locking the knife blade in place.

A suitable hydraulic pump is provided to supply fluid to both ends of the power ram as is a flow selector valve which prevents flow from the ram when the knife blade is locked into place.

A blade positioning mechanism or linkage comprising a first portion associated with the gauge plate, the position indicator, and a second portion connected to the knife blade activates the hydraulic pump and selector valve to supply the proper amount of fluid to the ram to properly position the knife blade.

OBJECTS OF THE INVENTION

Therefore, the objects of the present invention are: to provide a floatable knife assembly to be used in conjunction with a meat defatting machine to trim portions of a layer of fat from successive pieces of meat each having a fat layer thereon of varying thickness while leaving a constant remaining thickness of fat layer thereon; to provide such a floatable knife assembly which includes support members attached to a conventional meat defatting machine, pivotal links mounted thereon, a defatting knife mounting bracket to mount the defatting knife to the links and a gauge plate mounted on the mounting bracket; to provide such a knife assembly which allows the defatting knife to float upwardly or downwardly automatically upon engaging each successive piece of meat; to provide such a floatable knife assembly which includes a gauge plate which is selectively adjustable relative to the knife such that pieces of meat having varying red meat thicknesses can be accommodated by a single knife assembly; to provide such a floatable knife assembly which includes a positive knife blade position lock to lock the knife blade at a desired position relative to each successive piece of meat; and to provide such a floatable knife assembly which is simple in design, easy to manufacture, capable of automatic actuation, durable in use and particularly well adapted for the intended usage thereof.

Other objects and advantages of this invention will become apparent from the following description taken in connection with the accompanying drawings wherein are set forth, by way of illustration and example, certain embodiments of this invention.

The drawings constitute a part of this specification and include exemplary embodiments of the present invention and illustrate various objects and features thereof.

BRIEF DESCRIPTION OF THE DRAWINGS

FIG. **1** is perspective view showing a meat defatting machine having attached thereto a first embodiment of a floatable knife assembly according to the present invention.

FIG. **2** is a fragmentary enlarged front elevational view of the defatting machine and the floatable knife assembly with portions broken away to show details thereof.

FIG. **3** is a cross-sectional view of the defatting machine and floatable knife assembly taken generally along line **3—3** in FIG. **2**.

FIG. **4** is an enlarged cross-sectional view of a portion of a knife used in this invention.

FIG. **5** is a second enlarged cross-sectional view of a different portion of the knife shown in FIG. **4**.

FIG. **6** is an enlarged, fragmentary cross-sectional view taken generally along line **6—6** in FIG. **3** showing details of a floatable knife linkage system of the first embodiment of this invention.

FIG. **7** is an enlarged fragmentary exploded perspective view of a portion of the first embodiment of the knife assembly.

FIG. **8** is a cross-sectional view of the first embodiment of the knife assembly according to the present invention showing an alternate knife used therewith.

FIG. **9** is a perspective view of a second or modified embodiment of a knife assembly according to the present invention in conjunction with a meat defatting machine. FIG. **10** is a side elevational view of the second embodiment of the machine and knife assembly of the present invention with portions of a housing thereof broken away to show details thereof.

FIGS. **11** and **12** are enlarged fragmentary side elevational views of the second embodiment of the machine and knife assembly showing details of a knife positioning mechanism thereof.

FIGS. **13** and **14** are fragmentary and enlarged perspective views of portions of the second embodiment showing further details of portions of the knife positioning mechanism thereof.

DESCRIPTION OF THE PREFERRED EMBODIMENT

As required, detailed embodiments of the present invention are disclosed herein; however, it is to be understood that the disclosed embodiments are merely exemplary of the invention which may be embodied in various forms. Therefore, specific structural and functional details disclosed herein are not to be interpreted as limiting, but merely as a basis for the claims and as a representative basis for teaching one skilled in the art to variously employ the present invention in virtually any appropriately detailed structure.

The reference numeral **1** generally designates a floating knife assembly according to the present invention shown mounted on a conventional meat product defatting machine **3**.

The defatting machine **3** generally comprises a housing **5**, a conveyor **7**, a gripping roller **11** and a suitable support stand **13**. Included with the defatting machine **3** is a motor means (not shown) such as an electric motor, to rotate both the conveyor **7** and the gripping roller **11**.

The floatable knife assembly **1** includes spaced parallel and generally vertically oriented support members **17** which are rigidly attached by suitable fasteners to sides **19** of the defatting machine housing **5**. As best seen in FIG. **2**, the support members **17** substantially straddle the conveyor **7** and gripping roller **11**. A pair of spaced parallel upper and lower links **23** and **25** respectively are pivotally attached at first ends thereof **27** and **29** respectively to each support member **17**. At second ends **31** and **33** thereof respectively, the links **23** and **25** have pivotally attached thereto mounting plates **37** and **39**. As best shown in FIG. **3**, the mounting plates **37** and **39** are spaced from and substantially parallel with the asso-

ciated support member **17** forming a parallelogram therewith.

Securely attached to a lower portion of mounting plates **37** and **39** and extending therebetween is a defatting knife blade holder **41**. A gauge plate **43** is attached to and extends between the mounting plates **37** and **39** by means of a gauge plate support bracket **77** at a position generally above that of the knife holder **41**. The gauge plate support bracket **77** is connected to the mounting **37** and **39** so as to be selectively adjustable therewith.

The links **23** and **25** include at their first ends **27** and **29** thereof, a shaft or axle **45** extending outwardly therefrom relative to a center of the defatting machine **3**. The axles **45** are received through bores **46** in the support members **17**. Collars **47** are provided which securely engage axles **45** to retain same within bores **46**.

Extending outwardly from mounting plates **37** and **39**, are shafts or axles **49** which likewise extend through bores (not shown) in links **23** and **25** and are received in collars **51** attached thereto so as to be retained in link bores (not shown). As such, the links **23** and **25** are rotable both around their points of attachment with the support members **17** and their points of attachment to the mounting plates **37** and **39**. Further, the pivoting of the links **23** and **25** allow the knife holder **41** and gauge plate **43** to be positioned over a continuous range of positions relative to gripping roller **11**. As shown in FIG. **3**, the solid lines show a position of the knife holder near the lower end of the range of positions and the dotted lines show the position of the links when the knife holder is near the upper end of the range of positions.

The knife holder **41** includes a slot **53** therein in which is snugly retained a knife blade **55**. The knife holder **41** is securely attached to the mounting plates **37** and **39** by means of bolts **57** extending through bores **59** in a cap plate **61**, bores **63** in knife holder **41** and bores **65** in mounting plates **37** and **39** retaining the knife holder **41** onto the mounting plates **37** and **39**. Suitable fasteners such as nuts **67** are used to retain the bolts **57** therein.

As best shown in FIG. **2**, the knife holder **41** and blade **55** are curved upwardly near outer edges thereof. It is understood that knife holder **41** and blade **55** could be of any suitable design.

The forward portion of the knife holder **41** is beveled to exhibit a substantially wedge shaped configuration. Further, as shown in FIG. **2** the knife holder **41** includes land areas **73** and **75** alternatingly positioned both above and below the blade receiving slot **53**.

The gauge plate support bracket **77** includes a substantially horizontal portion **79** extending between leg portions **81**. The leg portions **81** abut against the mounting plates **37** and **39** and are adjustably retained therewith. As best shown in FIGS. **3** and **7**, the leg portions **81** include substantially vertical slots **83**. Bolts **87** extend therethrough and are received in threaded apertures **91** in mounting plates **37** and **39**.

The gauge plate **43** comprises a substantially planar member having a straight portion **95** extending forwardly and downwardly from the gauge plate support bracket horizontal portion **79** and an upwardly curving forward tip portion **97**.

In use, the floating knife assembly **1** is used in conjunction with the defatting machine **3** to separate a portion of a layer of fat of a piece of meat from a fat layer that is to remain on the resulting meat product. As shown in FIG. **3**, successive pieces of meat **111** such as a butt are processed by the defatting machine **3**. The pieces of meat **111** include thereon, a red meat portion **113**, a fat layer **115** and a skin portion **117**. It has been found that animals of the same age have in each individual cut of meat, a red meat layer **113** of constant thickness. However, animals of the same age group which are raised on different feed have a fat layer **115** which is of varying thickness depending on the feed used. As shown in FIG. **3**, the pieces of meat **111** approach the knife assembly **1** in the orientation such that the red meat portion **113** is exposed upwardly and the fat layer and skin **115** and **117** are exposed downwardly, substantially in contact with a conveyor **7**. In order to achieve a constant thickness of fat layer remaining on the red meat portion **113** of each piece of meat **111**, the floatable knife **1** is continuously and automatically biased upwardly and downwardly over a continuous range of positions relative to the conveyor dependent on the total thickness of each successive piece of meat **111**, which varies depending on the thickness of the associated fat layer **115**.

As shown in FIG. **3**, when a piece of meat **111** approaches the knife assembly **1**, conveyed thereto by conveyor **7**, the red meat portion **113** will engage a bottom surface **118** of the gauge plate tip portion **97**, urging the gauge plate **43** upwardly causing the links **23** and **25** to rotate about their points of connection on support members **17** and mounting plates **37** and **39** thereby raising the knife blade **55**. As the meat further progresses toward the knife blade **55**, the gauge plate **43** rests on the top surface of the meat positioning the knife above the gripping roller **11**. As the meat contacts the gripping roller **11**, the meat **111** is engaged by longitudinal radially extending teeth or ridges **120** of the gripping roller and is rapidly urged past the knife blade **55**.

It is seen that the distance between the gauge plate **43** and the knife blade **55** will determine the thickness of fat layer which is retained on the red meat portion of the meat **111**. For example, if the particular cut of meat **111** which is being processed by the defatting machine **3** has a constant red meat layer thickness of three inches and it is desired to retain on successive pieces of meat a fat layer **115** of one-half inch thickness then the distance between the gauge plate **43** and the knife blade **55** is adjusted to be three and one-half inches. This is accomplished by loosening bolts **87** and **89** and adjusting the gauge plate support bracket **77** relative to the mounting brackets **37** and **39** such that the vertical distance between the gauge plate **43** and knife blade **57** is three and one-half inches.

After each piece of meat **111** has traversed past the knife assembly **1**, gravity will automatically and quickly bias the links **23** and **25** gauge plate **43** and knife holder **41** downwardly such that the knife blade **55** assumes a position directly above the gripping roller **11**. Stops (not shown) can be provided to stop the downward rotation of the links **23** and **25** at such a position. When a second piece of meat in succession contacts the gauge plate **43**, the gauge plate will be biased upwardly thereby raising the knife blade **55**. Since each successive piece of meat has a constant thickness of red meat portion **113**, the floatable knife assembly **1** will trim that portion of fat layer **115** which is excessive of the desired amount that is to remain on the red meat portion **113**.

FIG. **8** shows the knife assembly **1**, mounted on a defatting machine **3**, with the knife holder **41** thereof being straight or flat. Further, a deskinning knife **125** is

provided to separate the skin layer **117** from that portion of the fat layer **115** which is separated from the piece of meat **111** by the defatting blade **55**. The deskinning knife **125** includes a holder **127** and a blade **129**. The holder **127** is securely attached to the defatting machine housing **5** by suitable means so as to remain fixed relative to the gripper roller **11**. The defatting knife holder **41** and gauge plate **43** function as set forth above and the deskinning knife **125** separates the skin layer **117** from the fat layer **115**.

A second embodiment of a knife assembly according to the present invention is shown in FIGS. **9–14** and is generally designated by the reference numeral **151**. With specific reference to FIGS. **9** and **10**, the knife assembly **151** generally comprises a support housing **153** in and on which various components of the knife assembly **151** are attached. A first conveyor means or mechanism **155** is provided along with a gauge plate **157**, a knife blade **159** and blade positioning means such as linkage mechanism **161** associated with and cooperating between both the gauge plate **157** and knife blade **159** to position the knife blade **159** at a desired vertical height or position above the conveyor mechanism **155** relative to a piece of meat as it is urged past the blade **159**. A gripper roller **163** is provided, as in the first embodiment. A second driven conveyor means or mechanism **165** has a relatively rough surface and is supported above the knife blade **159** and rides on a top surface of the meat both urging the meat downwardly, assuring that it does not rise from a position on the conveyor, and providing impetus to the meat to urge the meat past the knife blade **159**. The conveyor mechanism **165** includes suitable drive motor and drive linkage **166**. A deskinning blade mechanism **169** is provided again as in the first embodiment to cut the skin from the successive pieces of meat if so desired.

A blade position locking means is provided for locking the knife blade **159** in a desired position once it engages a piece of meat of generally uniform thickness thereby assuring that a constant thickness of fat layer is retained along the entire length of a piece of meat and on the successive pieces of meat as they are urged past the knife blade **159**, although it is possible to selectively adjust the thickness of the fat layer as will be discussed hereafter.

The gauge plate **157** is pivotally attached near a front edge **170** thereof to the housing **153** by suitable support members **171** positioned one on each side of the first conveyor mechanism **155**. The gauge plate **157** is freely attached to the support members **171** so as to be freely pivotal relative thereto about a generally horizontal and laterally aligned axis which is generally parallel to the front edge **170** of the gauge plate **157**. The successive pieces of meat **172** having a top surface **173** pass under the gauge plate **157** and between the support members **171**.

The knife blade **159** is supported on the housing **153** by a pair of knife blade support members **175** each being pivotally attached to an opposite side of a housing frame **179**. As shown in FIGS. **11** and **12**, the knife blade support members **175** pivot about a transverse axis relative to the first conveyor mechanism **155** which axis is associated with the rod **181** which extends between the knife blade support members **175** and is suitably journaled in opposite sides of the housing frame **179**.

Depending downwardly from the transverse rod **181** preferably near one end thereof is an elongate leg **183** which functionally supports proximity switches thereon. Attached to the elongate leg **183** are first and second proximity switches **185** and **186** retained on opposite sides of the legs **183**. The switches **185** and **186** each have a zone of influence area defined by a circle **187** and **188** on a front face **189** and **190** thereof respectively. Proximity switches are well known in the art and comprise electrical switches which are activated or turned-on when a suitable object is placed within the respective individual zone of influence.

The proximity switches **185** and **186** have suitable electrical conduits **191** associated therewith which electrically connect the switches to a central electrical control panel **192** which is shown in FIG. **9** as being remote from the remainder of the assembly **151** but which may be also mounted on the housing **153**.

A third proximity switch **197**, also having a zone of influence, is positioned below the first proximity switch **185** but is spaced slightly further outward from the elongate leg **183** than switch **185**.

As best shown in FIGS. **11** and **12** the gauge plate **157** has a first link **199** pivotally connected to the plate **157** medially between a rear portion **201** and the plate front edge **170**. The link **199** extends from the plate **157** to a first bell crank or lever **203** attached to a rocker shaft **205** which is transversely mounted in the housing by suitable journals **207** or the like and which has an axis of rotation aligned with or parallel to that of the gauge plate front edge **170**.

A second bell crank **211** is attached to the rocker shaft **205** and is orientated normal to the first bell crank **203** such that when an end **212** of the first bell crank **211** connected to the link **199** is primarily urged upwardly or vertically, as when the gauge plate rear end **201** is urged upwardly upon contact with a piece of meat **172**, end **213** of the second bell crank **211**, which end **213** is spaced outward from the shaft **205**, is primarily urged horizontally.

A connecting link **215** of adjustable length is attached to the second bell crank end **213** and extends between the second bell crank end **213** and a gauge plate position indicator support member **217**. The gauge plate position indicator support member **217** is supported by and is pivotally attached to the elongate leg **183** by a suitable rod or pin **219**, see FIG. **13**, and has first and second indicator plates **221** and **223** securely attached thereto. The indicator plates are fabricated of a suitable material which will trigger the proximity switches **185**, **186** and **197** when positioned in the zone of influence associated with each of the respective switches. Further, the first indicator plate **221** is positioned so as to be alignable with the first and second proximity switches **185** and **186** and the second indicator plate **223** is positioned so as to be alignable with the third proximity locator switch **197** as the position indicator support member **217** pivots about pin **219**.

A suitable power means is provided to rotate the knife blade members **175**, thus selectively positioning the knife blade **159**. As shown herein, the power means is a hydraulic ram device which comprises a cylinder **227** and a plunger **229** attached to a piston (not shown) which reciprocates within the cylinder **227**. Suitable fluid supply lines **231** and **233** are connected to suitable ports allowing flow of hydraulic fluid to the interior of the cylinder **227** and positioned on opposed sides of the piston so as to provide a source of fluid to the cylinder **227** from a suitable hydraulic system **234** (see FIG. **11**) as is well known in the art. The hydraulic system **234** comprises a pump **235** with drive motor **236** and a fluid

reservoir **237** and further has a three way selector switch or valve **238** (preferably a solenoid switch) associated therewith which allows the pump **235** to motivate pressurized fluid selectively to one of the two opposite sides of the cylinder **227** through lines **231** or **233** to urge the plunger **229** in a desired direction. The selector valve **238** further includes a third position wherein flow is prevented through either line **231** or **233** to effectively lock the plunger **229** in a particular position while fluid simply returns to the reservoir **237** from the pump **235** so as to bypass the cylinder **227**.

The ram cylinder **227** is mounted on a suitable framework **241** associated with the housing **153** and the plunger **229** is connected to a lower end **243** of the elongate leg **183** as best shown in FIG. **14**.

The assembly **151** also includes an electric eye system comprising photo electric cells or eyes **252**, **253** and **254**. The eye **252** is adjustably mounted in a framework **255** above the conveyor belt **155** and just prior to the gate **157**. The eye **253** is mounted below the eye **252** on the framework **255**. A third eye **254** is mounted such that the beam thereof crosses over the belt **155** between the gate **157** and the blade **159**.

A product discharge conveyor **260** is also provided for conveying meat products away from the blade **159**. The conveyor **260** is mounted such that a belt **262** driven by a motor **261** engages the meat as it passes the blade **159** so as to convey the meat from the assembly **151**.

It is noted that the various, electrical and hydraulic components are tied together by well known circuitry at electrical control panel **192** to allow coordinated control of the assembly **1**. The panel **192** includes standard switches for starting the various conveyor motors, hydraulic motor **236** and deskinning blade motor. The panel **192** also includes a switch for allowing manual selection of whether the blade **159** will be set for premium or regular cuts by activating one of proximity switches either **185** or **197**.

This selection process can also be placed in an automatic mode wherein photo electric cells **252** and **253** control the grade adjustment. For example, if premium grade is desired, the meat is normally trimmed for this grade unless a large pork butt breaks the beam of cell **252**. When this occurs, the circuitry automatically switches to regular grade and activates the proper proximity switch. When cell **252** is triggered, there is a relay which maintains the system in the regular grade setting until the normal time has elapsed for the particular butt that triggered cell **252** to pass. Cell **253** is spaced horizontally along the conveyor **155** from cell **252** and, when triggered, acts to disable the signal from cell **252** such that if the butt does not immediately trigger cell **252**, it will not do so as the butt continues through gate **157**. Cell **254**, when triggered, sets the hydraulic valve **238** on bypass such that the cylinder plunger **229** and consequently the blade **159** are locked in position as the butt **172** engages the blade **159**. A time delay relay holds the blade **159** in the locked position until a normal time has passed for the butt **172** to be entirely trimmed by the blade **159** after which the blade **159** is free to be set in position for the next successive butt. The locking occurs as the valve **238** switches to the bypass mode thereof and prevents flow of fluid through fluid lines **231** and **233**.

In use, the knife assembly **151** as shown in FIGS. **9** through **14** functions to sever from a succession of pieces of meat each exhibiting a lean portion of constant thickness a portion of a fat layer of variable thickness while leaving a generally constant layer of fat on each of the successive meat pieces. Further, the knife assembly **151** includes a blade locking means to securely lock the knife blade **159** in the desired position while the meat piece is urged past the blade **159** thereby assuring that the blade **159** does not float or move from an initial position relative to the lean-fat juncture of the meat. In doing so, the thickness of the fat remaining on the piece of meat remains consistant along the entire piece.

As best shown by referring to the drawings, the operation of the knife assembly **151** is as follows. When a piece of meat **172** is urged into contact with the gauge plate **157**, the gauge plate rear edge **201** is biased upwardly to a position where it rides on the meat top surface **173**. When this occurs, the first link **199** is urged upwardly causing the rocker shaft **205** along with the bell cranks **203** and **211** to rotate in a clockwise motion, as shown in FIGS. **11** and **12**. When this occurs, the second link **215** is urged to the left, again as shown in FIGS. **11** and **12**, causing the gauge plate position indicator support member **217** to also rotate clockwise about pin **219**. This moves the first gauge plate indicator **221** into the zone of influence of the first proximity switch **185**, which thereby activates the switch **185**. This position is shown in solid lines in FIG. **11**.

Upon activation of the switch **185**, the selector valve **238** is automatically appropriately positioned by suitable circuitry connected to the switch **185** to supply fluid through conduit **233** to the cylinder **227** urging the piston and plunger **229** outwardly with respect thereto. Upon such outward movement of the plunger **229** the elongate leg **183**, along with rod **181**, is rotated clockwise, as viewed in FIGS. **11** and **12**, until the first proximity switch **185** is moved to a position where the first indicator plate **221** is not within the associated zone of influence. This movement of the rod **181** also rotates the blade support members **175** clockwise and positions the blade **159** at a certain position above a plane of the conveyor mechanism **155**. By adjusting the length of the second link **215** the vertical difference between the gauge plate rear edge **201** and the knife blade **159** will be adjusted to retain the desired amount of fat portion on the meat pieces **172** for both premium and regular grades.

After the piece of meat **172** has passed the gauge plate **159**, the gauge plate rear edge **201** drops urging the first link **199** downwardly, as shown in FIGS. **11** and **12**, the second link **215** rightwardly, and the first indicator plate **221** into the zone of influence of the second proximity switch **186**. When this occurs the second proximity switch **186** is actuated, resulting in the selector valve **258** being activated to a new position, such that fluid is passed through the first fluid conduit **231** causing the plunger **229** to be retracted within the cylinder **227** and rotating the elongate leg **181** to a position where the second proximity switch **186** is moved an extent such that the first indicator plate **221** is not within its zone of influence.

It can be seen that unless some delay machanism is provided with regard to the activation of the second proximity switch **186**, the knife blade **159** will lower prior to the complete passing of the piece of meat therepast. Therefore, a timer means such as a delay timer or relay, incorporated in control panel **92** as discussed before, is incorporated into the electrical circuit connecting the second proximity switch **186** to the selector valve **238** thereby delaying the triggering of the valve

238 for a desired length of time allowing the successive pieces of meat to be completely urged past the knife blade **159** prior to returning the knife blade **159** to a down position as shown in solid lines in FIG. **11**.

It is anticipated that a user of the product will want to selectively trim the pieces of meat to leave two different thicknesses of fat layer remaining thereon. By spacing the second indicator plate **223** from the indicator plate support member **217** a distance different from the position of the first indicator plate **221** and by utilizing the third proximity switch **197** along with the second proximity switch **186** the position of the knife blade **159** can be varied a predetermined amount different from that if the switches **185** and **186** are utilized.

It is noted that the switches **185**, **186** and **197** have only short travel distances between "on" and "off" in either direction to ensure a close control over the thickness of the meat.

It is to be understood that while certain forms of the present invention have been illustrated and described herein, it is not to be limited to the specific forms or arrangement of parts described and shown.

What is claimed and desired to secure by Letters Patent is:

1. In a meat defatting machine adapted for removing all but a generally consistant thickness of a portion of fat from successive pieces of meat, each having a fat layer of varying thickness thereon and a lean portion of generally consistant thickness; said machine comprising a housing, a conveyor for moving meat therebetween, a defatting knife positioned above the conveyor and moveable through a continuous range of positions thereabove, a gauge plate member engageable with a top surface of each successive piece of meat and means connecting the knife blade to the gauge plate to position the knife blade a desired amount above the conveyor dependent upon the thickness of each successive piece of meat, the improvement comprising:

(a) a knife blade position locking means cooperating with said knife blade and adapted to lock said knife blade in a predetermined position above a plane associated with said conveyor whereby said knife blade does not move relative to said conveyor as a piece of meat is urged therepast such that a generally consistent thickness of fat layer is left along the piece of meat.

2. A meat defatting machine for severing from a succession of pieces of meat each having a red meat layer of generally consistant thickness and a fat layer of varying thickness, a portion of said fat layer in excess of a desired total thickness of red meat layer and fat layer; said machine comprising:

(a) a housing;

(b) a knife blade;

(c) conveyor means associated with said housing to present a succession of pieces of meat past said knife blade;

(d) a gauge plate transversely mounted above the conveyor means on a support member, the gauge plate being pivotally mounted to said support member along an axis thereof and a portion of said gauge plate spaced from said axis being movable with respect to said conveyor means and engageable with a top surface of each successive piece of meat urged therepast;

(e) knife blade support means comprising a member connected to said knife blade and pivotally connected to said housing;

(g) blade positioning means for selectively positioning said blade at a proper position relative to said conveyor plane; and

(h) blade locking means to lock said blade in said desired position while cutting an individual piece of meat as said piece of meat is urged therepast.

3. The machine as set forth in claim **2** wherein:

(a) said knife blade support means includes an elongate leg extending therefrom; and

(b) said blade positioning means comprises a first portion connected to said gauge plate, a second portion connected to said elongate leg and a ram member extending between said housing and said elongate leg.

4. The machine as set forth in claim **3** wherein:

(a) said blade positioning means further comprises

(1) a double acting power ram having a cylinder and a reciprocating plunger, said cylinder being attached to said housing, said plunger having an end attached to said knife blade support means, said ram including hydraulic fluid lines providing fluid to opposite ends of the cylinder so as to motivate said plunger in opposite directions; and

(2) selector valve means selectively allowing fluid flow to a desired one of said cylinder opposed ends, said selector valve means being selectively positioned to prohibit fluid from flowing from said ram thereby locking said knife blade in position;

(b) said blade positioning means first portion comprises a gauge plate position indicator connected to said gauge plate and moveable therewith when a piece of meat passes thereunder;

(c) said blade positioning means second portion comprises first and second proximity locator switches secured to said blade support means elongate leg in alignment with a line of motion of said gauge plate position indicator, said proximity switches each having a zone of influence therearound such that when said gauge plate indicator is biased into one of said zones of influence, the switch associated therewith is activated whereby when said gauge plate indicator is positioned within said first proximity switch field of influence; said first proximity indicator switch activates said valve means to a first position to supply fluid to a first end of said cylinder; when said gauge plate indicator is positioned within said second proximity switch field of influence, said second proximity switch activates said valve means to a second position to supply fluid to a second end of said cylinder; and when said gauge plate indicator is positioned between said first and second proximity switch zone of influence said valve means is positioned to prevent fluid from flowing from said cylinder thereby positively positioning said knife blade a fixed distance above the conveyor means.

5. The machine as set forth in claim **4** including:

(a) timer means activated when said selector valve is activated to prevent flow from said cylinder whereby after a desired amount of time said valve is opened allowing said knife blade to return to a lowermost position.

6. A floating knife assembly for use with a meat defatting machine having a conveyor means for moving a succession of pieces of meat past a cutting means, the defatting machine adapted to cut a portion of a layer of fat from each of the successive pieces of meat, each

piece having a constant thickness of red meat portion and a variable thickness of fat layer, the fat layer having a surface engageable with the conveyor means; said assembly comprising:

(a) a defatting knife blade positioned transverse to said conveyor and adapted to engage each successive piece of meat;

(b) mechanical link means connecting said knife blade to said machine to allow said knife blade to be positioned over a continuous range of positions above said conveyor and fat layer surface; and

(c) a gauge member adapted to engage a top surface of each successive piece of said succession of pieces of meat and ride thereon as said pieces of meat are urged therepast by said conveyor means, said gauge member urging said knife blade into one of said continuous range of positions relative to said fat layer surface;

(d) connecting means connecting said gauge member to said knife blade; and

(e) locking means cooperating between said gauge member and said knife member through said connecting means to positively position said blade at a fixed distance over said conveyor while a particular piece is being cut by said blade; whereby a generally consistent thickness of fat layer is left remaining attached to the red meat portion of each successive piece of meat.

* * * * *