US 20080105131A1

(19) United States

(12) Patent Application Publication

Castellani

(10) Pub. No.: US 2008/0105131 A1

(43) Pub. Date: May 8, 2008

(54) DELIVERY HEAD FOR ESPRESSO COFFEE MACHINES

(76) Inventor: **Andrea Castellani**, Milan (IT)

Correspondence Address:
HEDMAN & COSTIGAN P.C.
1185 AVENUE OF THE AMERICAS
NEW YORK, NY 10036 (US)

(21) Appl. No.: 12/004,747

(22) Filed: Dec. 21, 2007

Related U.S. Application Data

(62) Division of application No. 11/076,736, filed on Mar. 10, 2005, now Pat. No. 7,320,274.

(30) **Foreign Application Priority Data**

Dec. 9, 2004 (IT) MI2004A 002350

Publication Classification

(51) Int. Cl.
A47J 31/00 (2006.01)

(52) U.S. Cl. 99/295

(57) **ABSTRACT**

A delivery head for espresso coffee machines comprises a top supporting element pivoted to a bottom supporting element in turn made rigid with the machine body, said bottom supporting element comprising an infusion recess provided for receiving a coffee holding capsule, said delivery head further comprising an operating lever operating at least one of the support elements to define at least an open position for loading and unloading the coffee capsule, and a coffee delivery closed position, said head including perforating means for progressively perforating the capsule and capsule ejecting means.

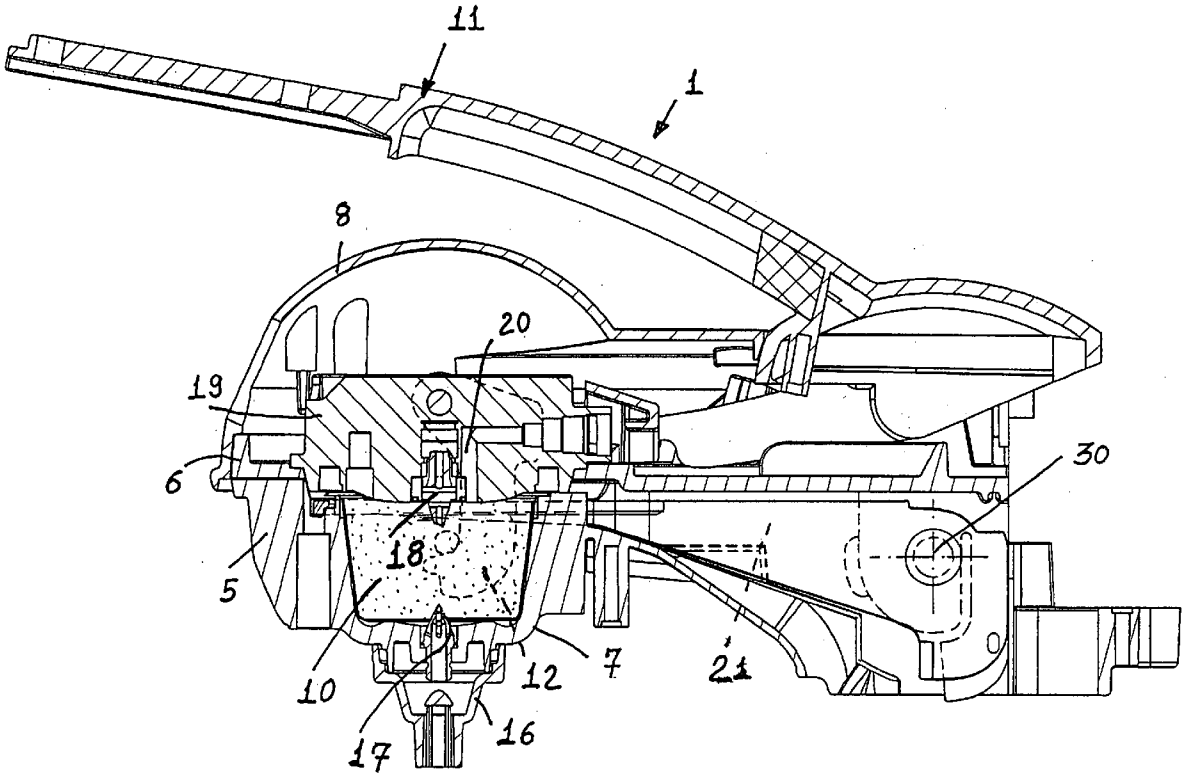

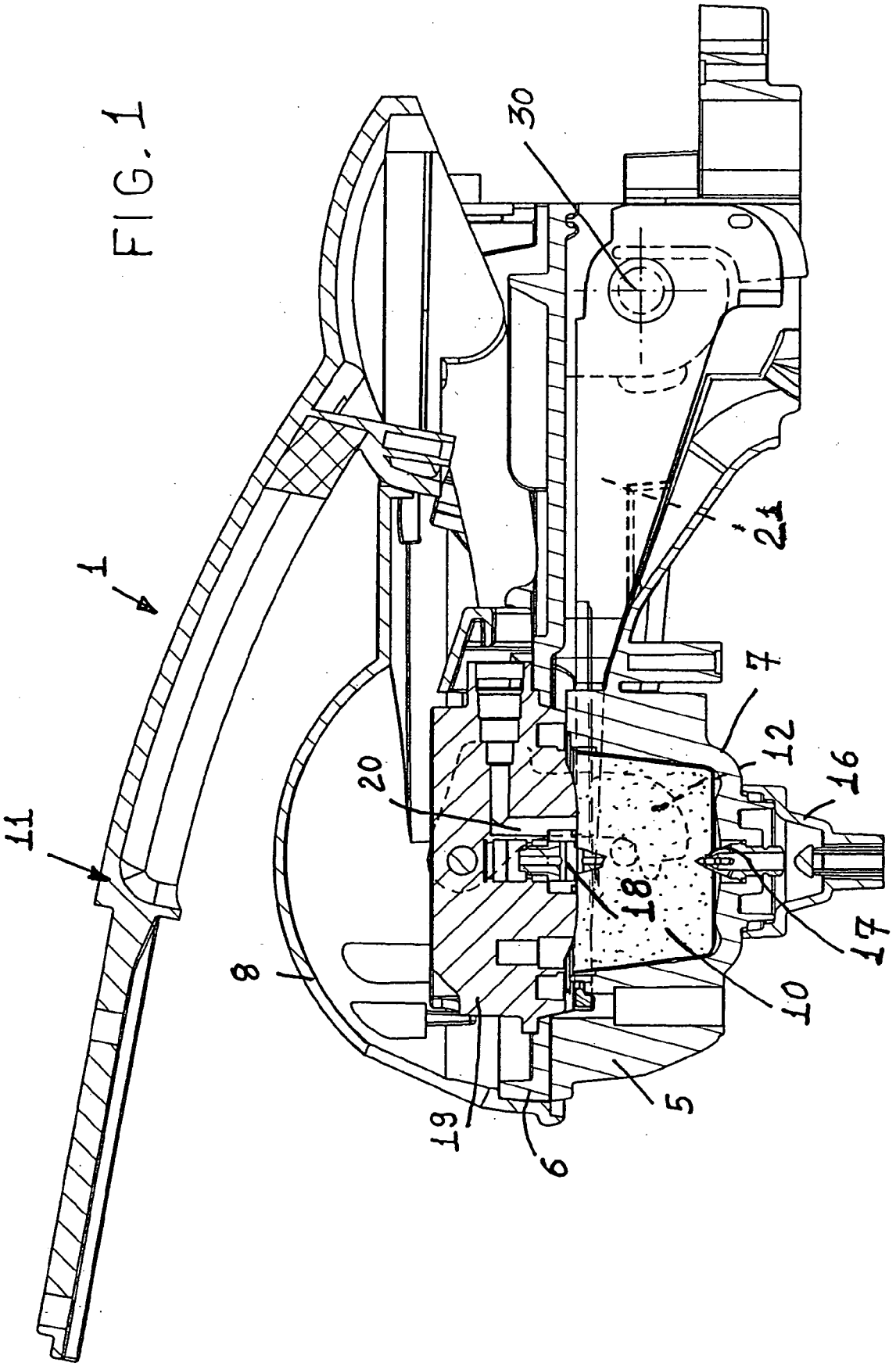

FIG. 1

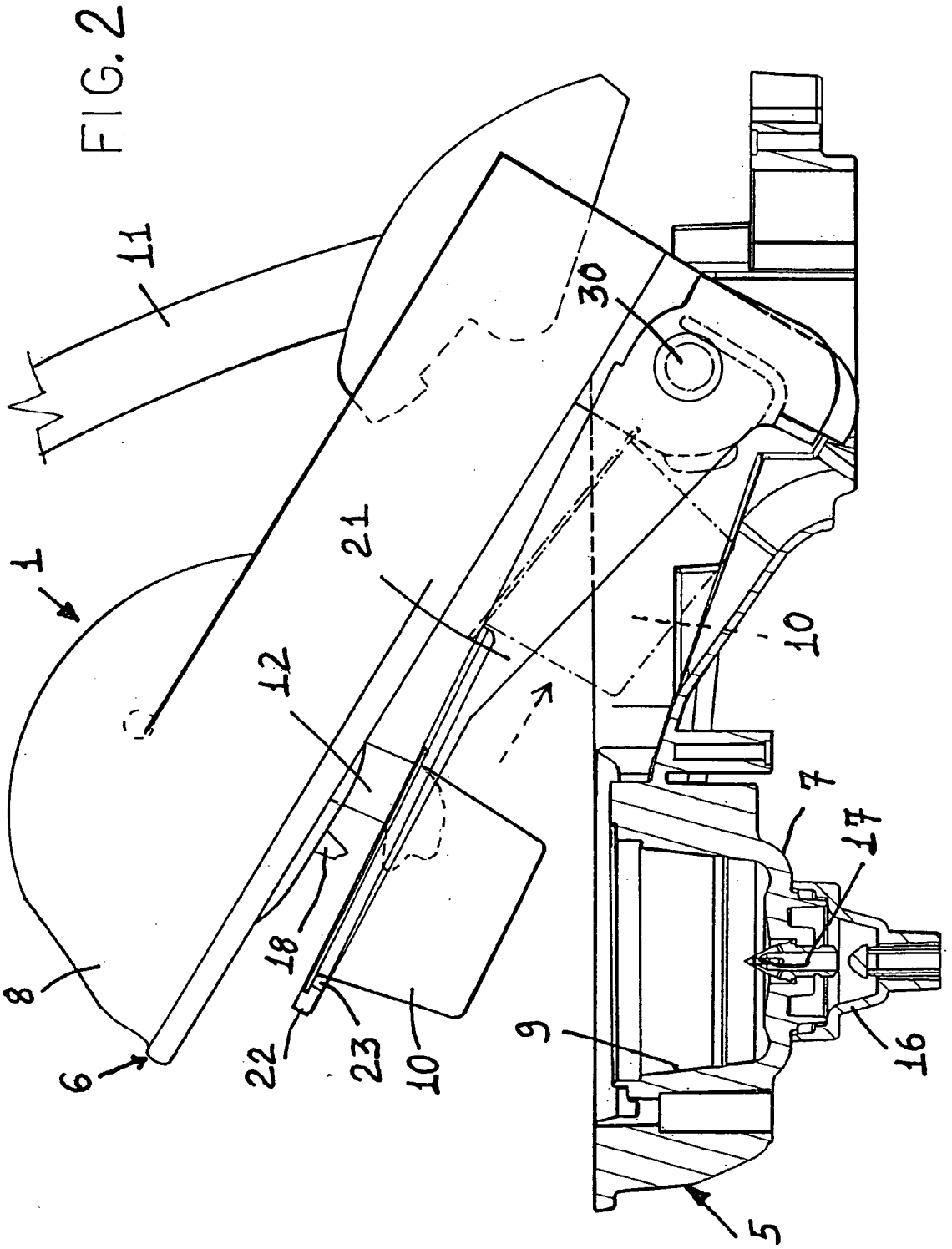

FIG. 2

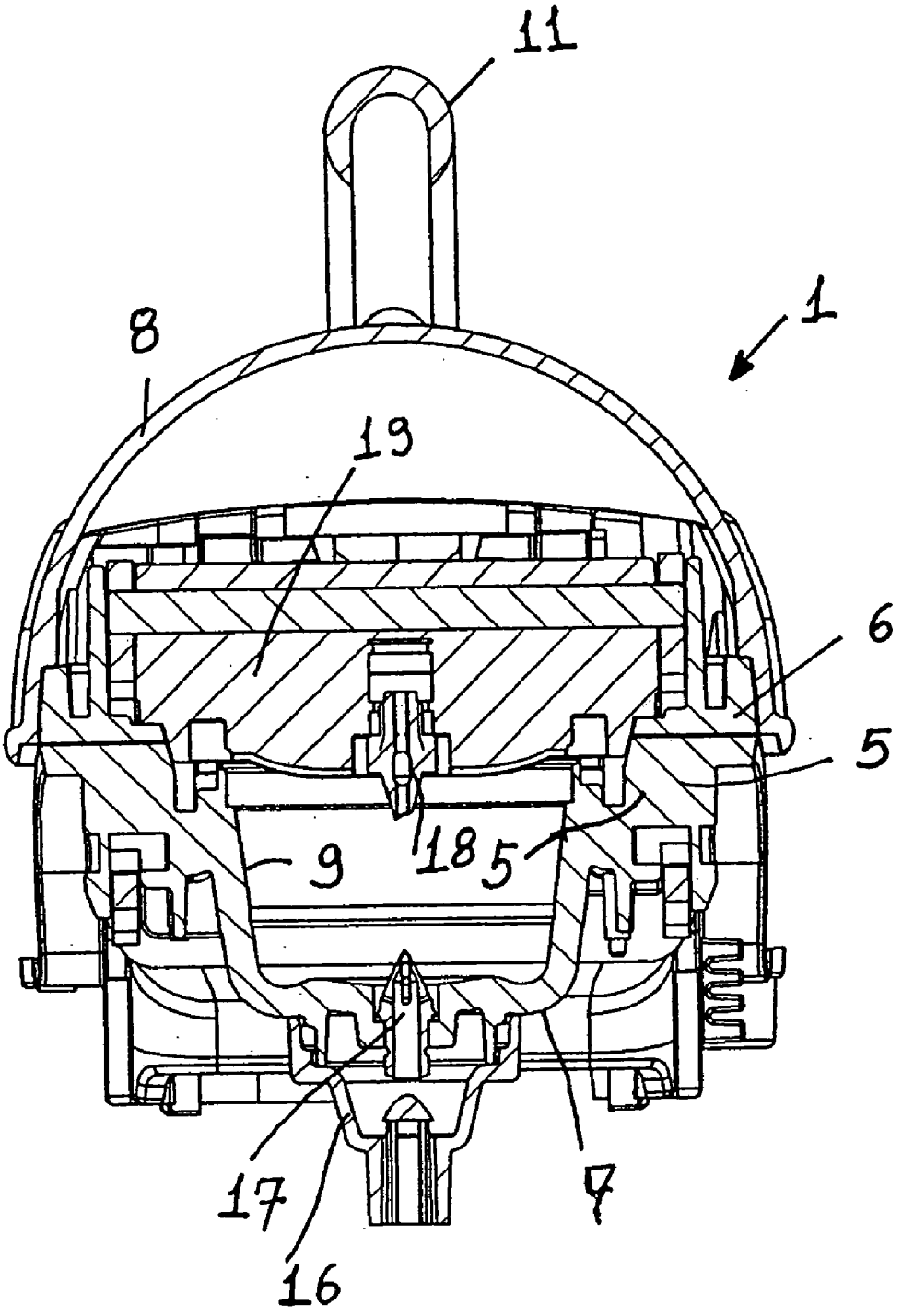

FIG. 3

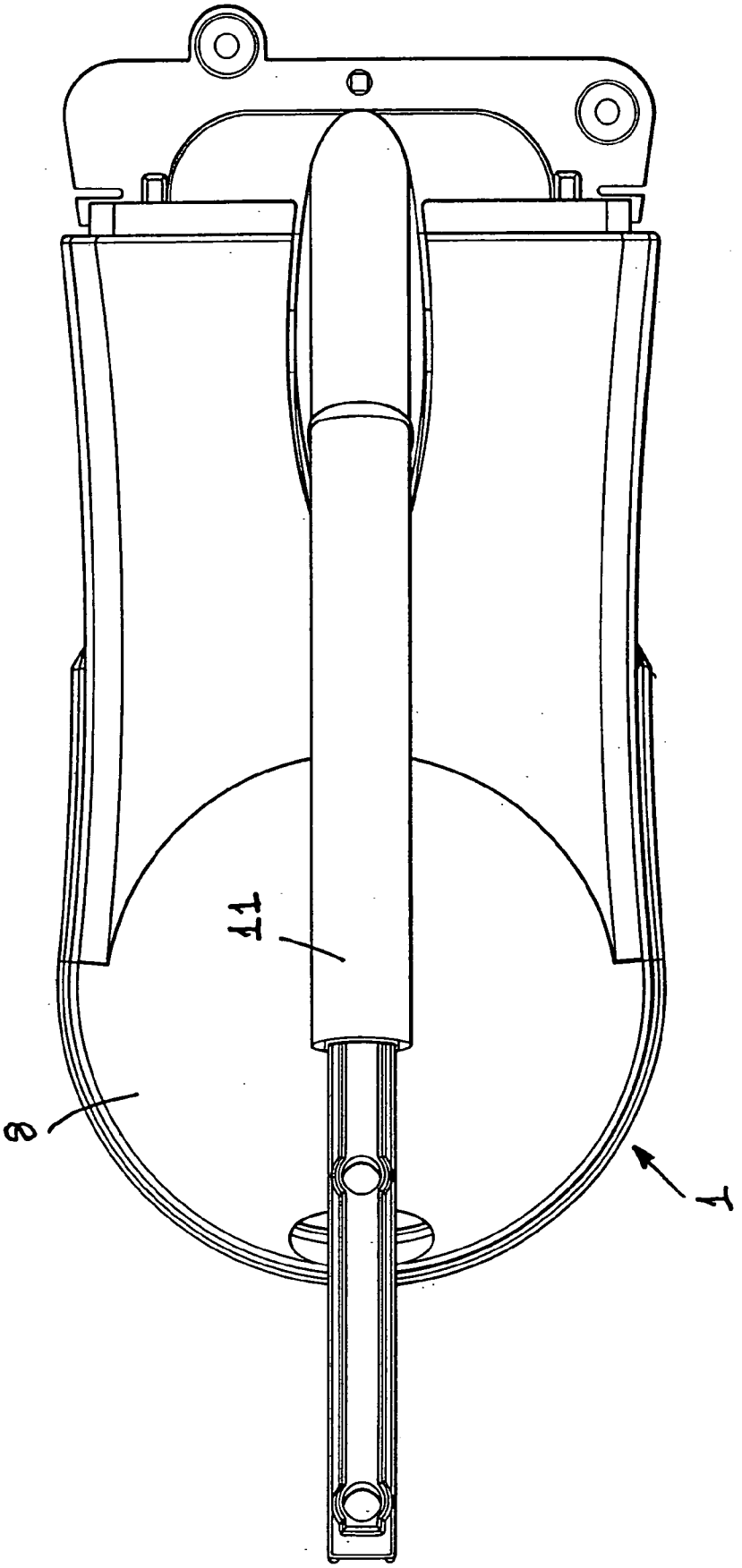

FIG. 4

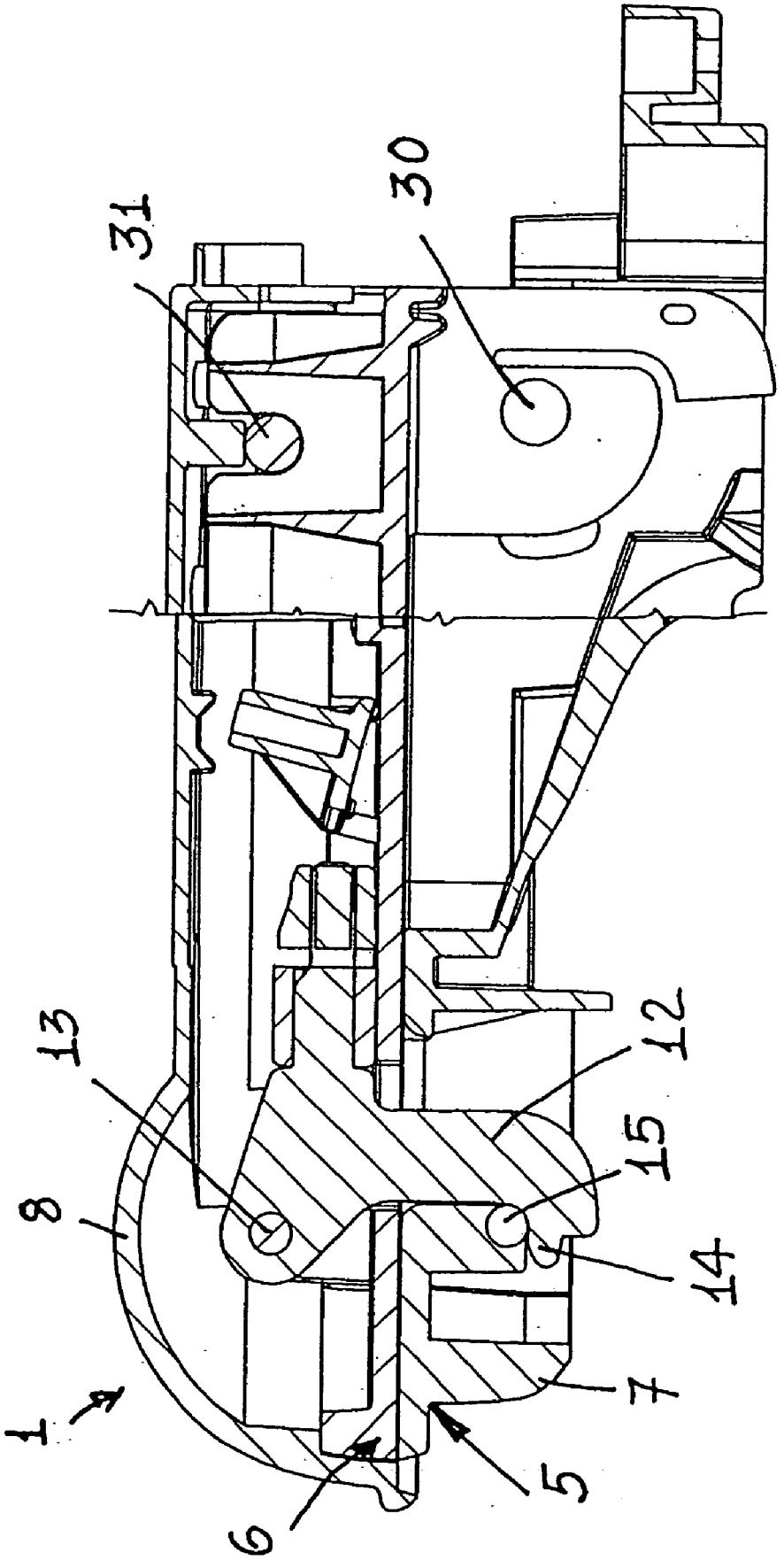

FIG. 5

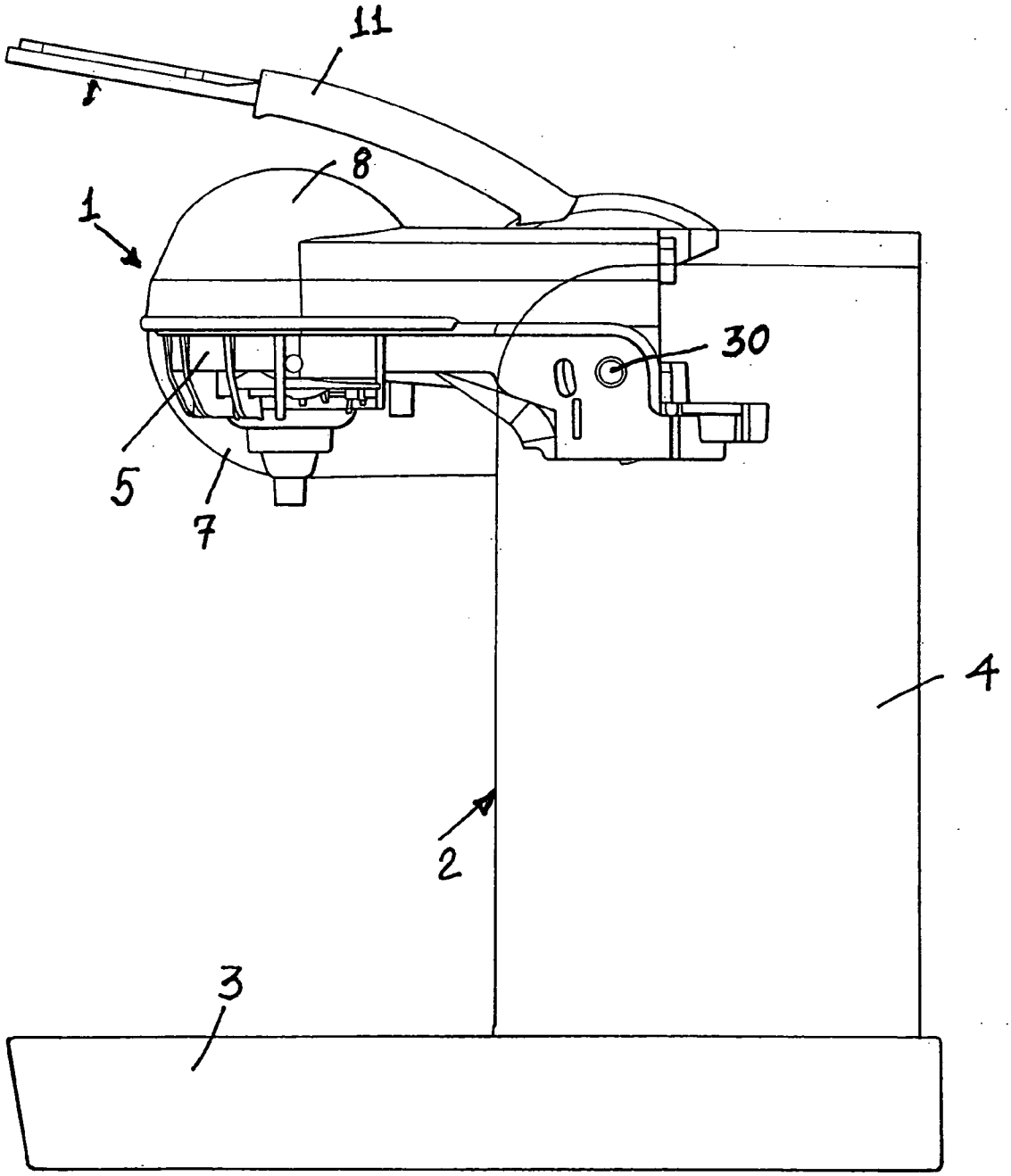

FIG. 6

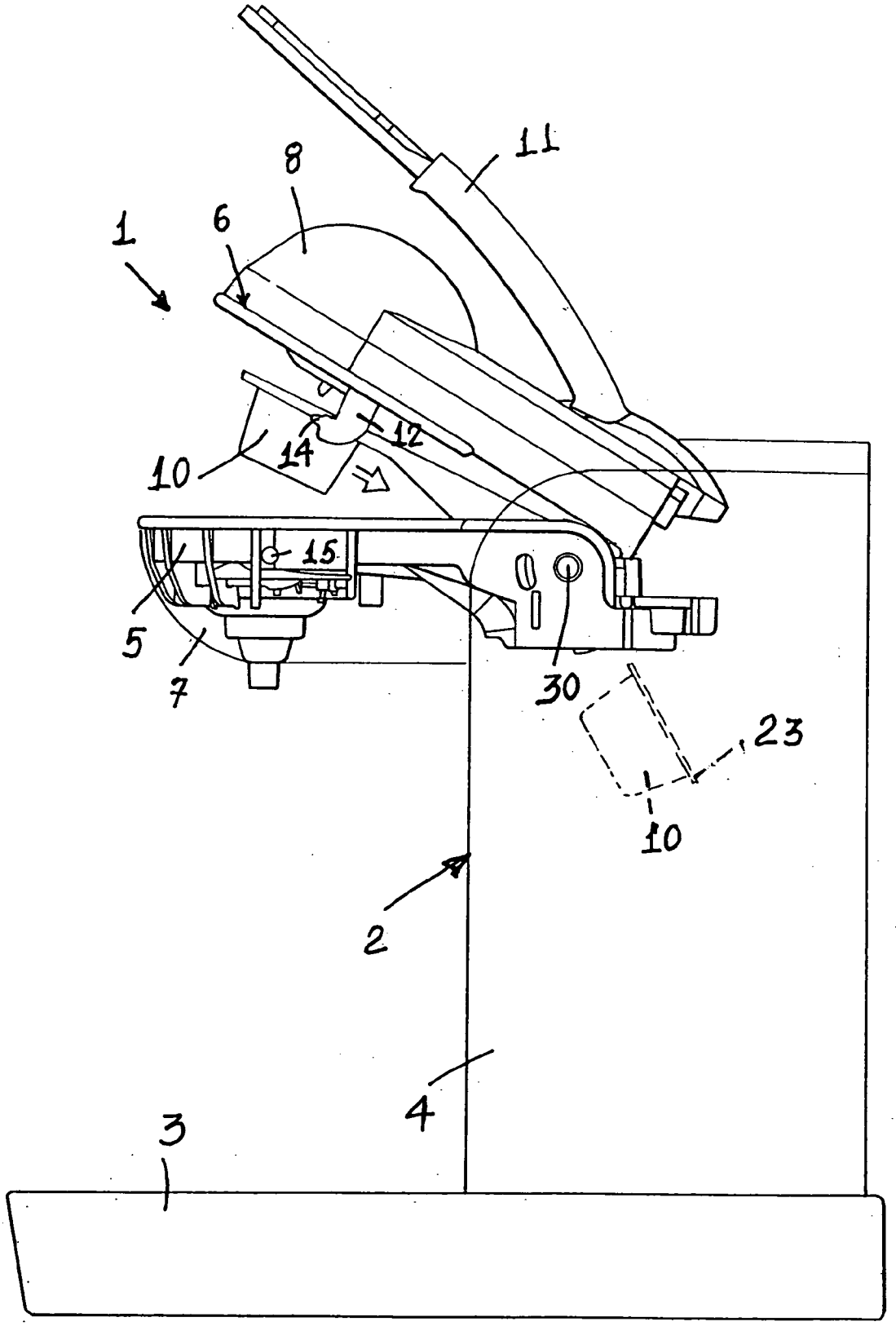

FIG. 7

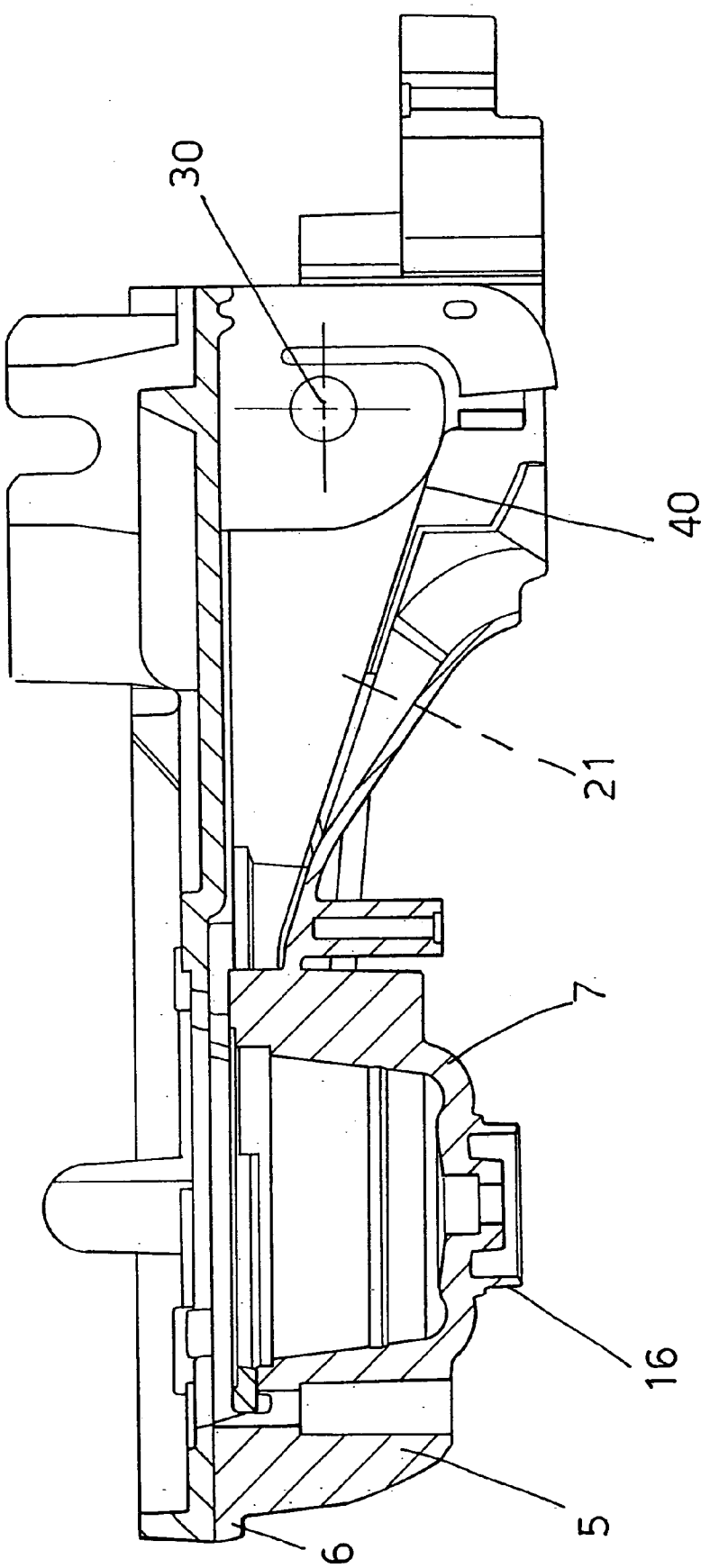

FIG 8

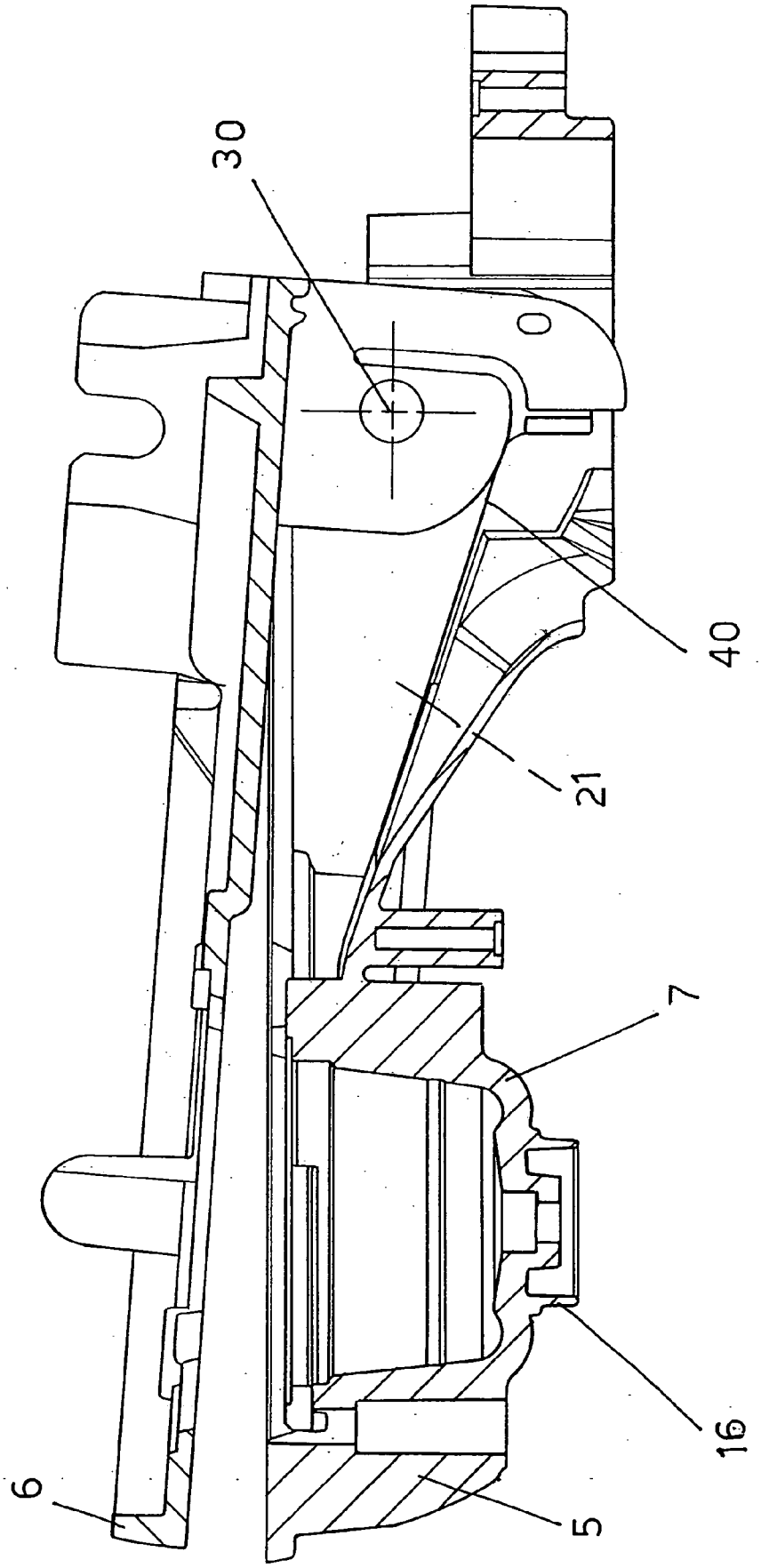

FIG 9

FIG 10

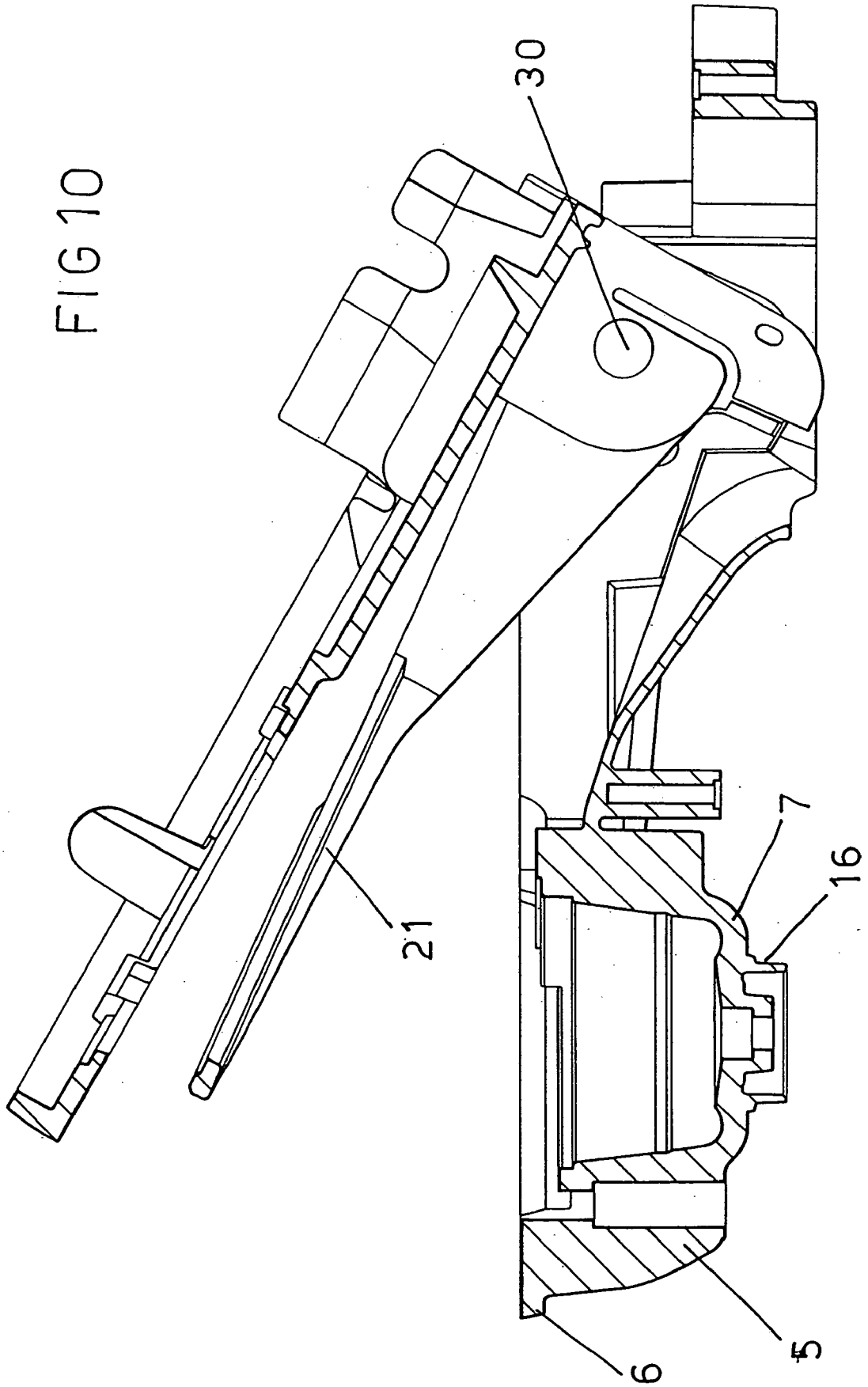

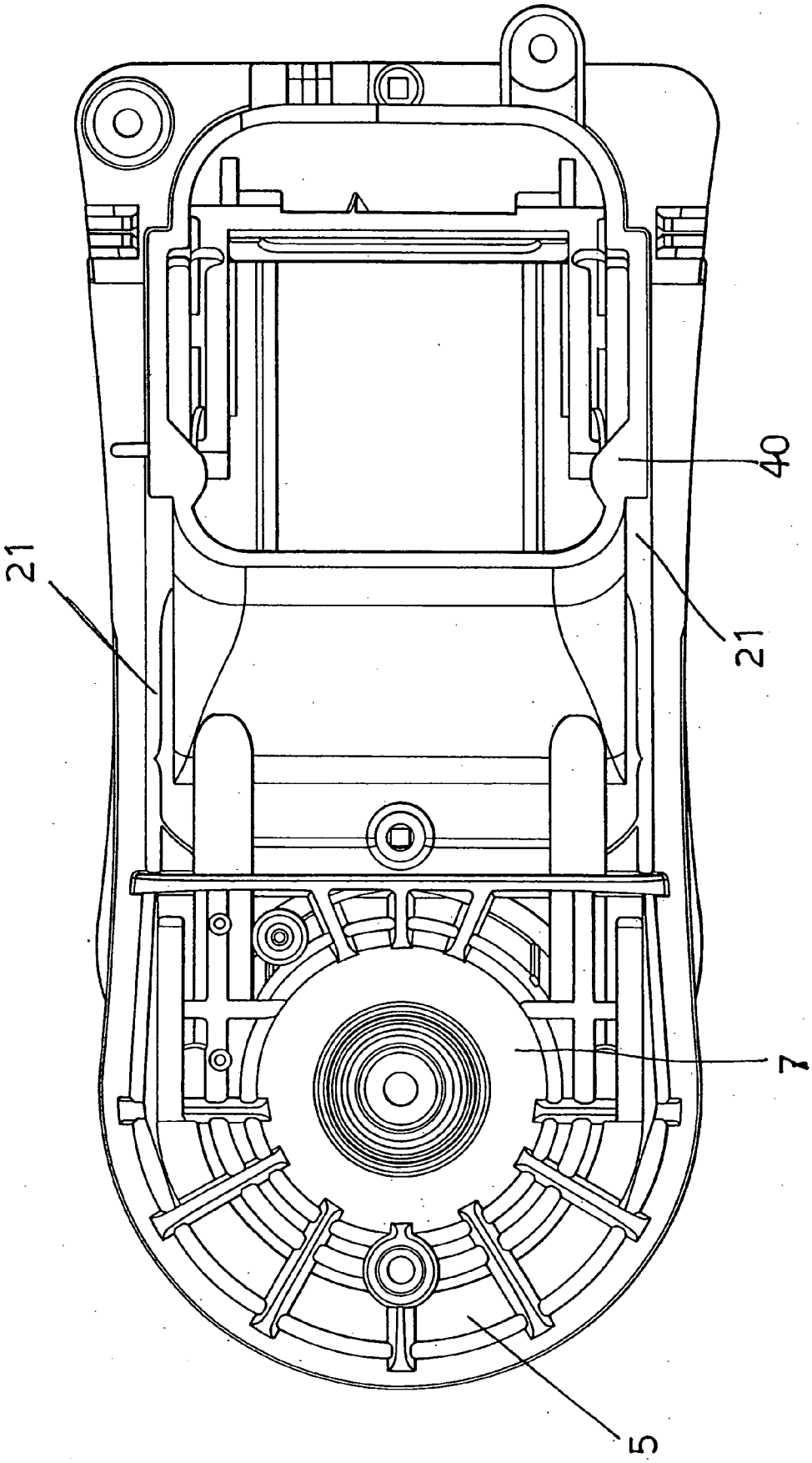

FIG 11

DELIVERY HEAD FOR ESPRESSO COFFEE MACHINES

BACKGROUND OF THE INVENTION

[0001] The present invention relates to an espresso coffee machine delivery head,

[0002] As is known conventional espresso coffee machines conventionally comprise an infusion unit, designed for receiving a disposable or single use capsule filter including a cylindric body holding at least a ground coffee portion.

[0003] More specifically, the infusion unit is supplied with pressurized hot water, produced by hot water producing members housed in the machine body.

[0004] In general, said infusion unit comprises a horizontal plate, on which is formed a guide allowing the capsule to slide from a loading position to an unloading position, by passing through an infusion middle position.

[0005] To accurately arrange the capsule at the infusion position, are conventionally used locating means, comprising two jaws arranged on the side of the guide and rotatively driven according to vertical axes, as counterbiassed by respective spring elements.

[0006] The above mentioned mechanisms, used in prior espresso coffee machines, are affected by a lot of drawbacks due to pressurized water steam and coffee powder.

[0007] In particular, among the above mentioned drawbacks, it is to be mentioned the jammings to which the infusion units of the coffee machines are subjected, and, more specifically, a not perfect sealing between the coffee capsule and its housing recess, during the infusion operation.

[0008] Another drawback of prior infusion units is that the loading of the coffee capsule is rather difficult to be performed and, sometimes, fails.

SUMMARY OF THE INVENTION

[0009] Accordingly, the aim of the present invention is to provide a delivery head, particularly for espresso coffee machines, which is so designed as to fully overcome the drawbacks of the prior art.

[0010] Within the scope of the above mentioned aim, a main object of the invention is to provide such a delivery head, in which the single-use or disposable capsule loading and unloading operations can be performed in a very easy and safe manner, from a user standpoint.

[0011] Yet another object of the present invention is to provide such a delivery head assuring a perfect infusion of the coffee beverage.

[0012] According to one aspect of the present invention, the above mentioned aim and objects, as well as yet other objects, which will become more apparent hereinafter, are achieved by a delivery head for espresso coffee machines, characterized in that said delivery head comprises a top supporting element pivoted to a bottom supporting element, said bottom supporting element being made rigid with a body of said machine; said bottom supporting element comprising an infusion recess, designed for receiving a coffee holding capsule; said delivery head further comprises an operating lever which operates at least one of said support elements to define at least an open capsule loading and unloading position, and a coffee delivery closed position, said head further including perforating means for progressively perforating said capsule and capsule ejecting means.

BRIEF DESCRIPTION OF THE DRAWINGS

[0013] Further characteristics and advantages of the present invention will become more apparent hereinafter from the following detailed disclosure of a preferred, though not exclusive, embodiment of the invention, which is illustrated, by way of an indicative, but not limitative, example in the accompanying drawings, where:

[0014] FIG. **1** is a side elevation view, as longitudinally cross-sectioned, of the delivery head according to the invention, being shown in a delivery position thereof;

[0015] FIG. **2** is a further side elevation view, as partially longitudinally cross-sectioned, of that same delivery head, shown in a capsule ejecting position thereof;

[0016] FIG. **3** is a cross-sectional front elevation view of the delivery head, shown in a delivery position thereof;

[0017] FIG. **4** is a top plan view of that same delivery head;

[0018] FIG. **5** is a partial side elevation view showing the delivery head, as longitudinal cross-sectioned according to a section plane different from that of FIG. **1** and shown in a broken away condition;

[0019] FIG. **6** is a partially broken away side elevation view illustrating a coffee machine including the delivery head according to the present invention, being shown in a delivery position thereof;

[0020] FIG. **7** is a view similar to FIG. **6**, but illustrating the coffee machine during a capsule ejecting operating step;

[0021] FIGS. **8**, **9** and **10** show three side cross sections of the bottom supporting element, the top supporting element and the ejecting fork element and, more specifically:

[0022] FIG. **8** shows a rest position of the ejecting fork element;

[0023] FIG. **9** shows an initial opening position of the top supporting element, the ejecting fork element being held in its rest position;

[0024] FIG. **10** shows a maximum opening position of the top supporting element before disengaging the fork element upward driving means in which, at the end of the coffee capsule unloading operation, the top supporting element starts to disengage from the fork element which will return to its rest position by gravity;

[0025] FIG. **11** shows a bottom view of the elements illustrated in FIGS. **8**, **9** and **10** and, more specifically, said FIG. **11** clearly shows the two linear cams disengaging the fork element of the top supporting element during an opening step.

DESCRIPTION OF THE PREFERRED EMBODIMENTS

[0026] With reference to the number references of the above mentioned figures, the delivery head according to the present invention, which has been generally indicated by the reference number **1**, can be applied to an espresso coffee

machine, generally indicated by the reference number **2**, including a base or bottom **3** and an upright **4**.

[**0027**] Said upright comprises, in the inside thereof, driving devices designed for driving said espresso coffee machine, said driving devices including, in a per se known manner, a pressurized hot water source, supplying the delivery head.

[**0028**] According to the present invention, the delivery head **1** comprises a top supporting element **6**, pivoted, through a pivot pin **30**, to bottom supporting elements **5**, in turn made rigid with the upright **4** of the coffee machine.

[**0029**] As shown, the top supporting element **6** comprises a top cover **8**, and the bottom supporting element **5** likewise comprises a bottom cover **7**.

[**0030**] The bottom supporting element **5** comprises moreover a recess **9** provided for housing, during the coffee delivery, and as it will become more apparent hereinafter, a ground coffee holding capsule **10**.

[**0031**] An operating or driving lever **11** is pivoted, through a pivot pin **31**, to the top supporting element **6** for driving it, so as to define at least two operating positions: a first position closed on the bottom supporting element for delivery coffee, and a second open position for loading and ejecting the coffee capsule **10**.

[**0032**] The closed delivery position can be clearly seen in FIGS. **1**, **3**, **5** and **6**, whereas the capsule loading and ejecting open position can be clearly seen in FIGS. **2** and **7**.

[**0033**] More specifically, the delivery closed position is stably held so as to resist against the delivery pressure, by locking means including a locking lever **12** pivoted to the top supporting element **6** at a locking lever pin **13** and having a hook shaped portion **14**, affecting a locking peg **15**, rigid with said bottom supporting element **5**.

[**0034**] According to the present invention, the delivery head **1** comprises delivery means, including perforating means for progressively perforating the coffee capsule **10**.

[**0035**] In particular, said delivery means comprise a delivery nozzle **16**, formed in the bottom supporting element **5**, at an outlet hole formed in the bottom of the coffee capsule **10** housing recess **9**.

[**0036**] In this position, according to the invention, is arranged a bottom perforating assembly **17**, preferably of circular cross-section tapering configuration, adapted to perforate the bottom of the coffee capsule **10**.

[**0037**] Such a perforation is obtained as the coffee capsule **10** is pressed against the bottom perforating assembly **17**, under the pressure provided by an overheated water flow, introduced into said coffee capsule **10**, and providing a downward directed pushing of the bottom wall of said coffee capsule **10** against the bottom perforating assembling or element **17**.

[**0038**] The perforating means comprise moreover a top perforating assembly or element **18**, having a quadrangular tapering cross-section, and being coupled to a support **19** for the top perforating element **18**, in turn coupled to the top supporting element **6**.

[**0039**] The support **19** for the top perforating element **18** comprises at least a delivery duct **20**, adjoining the top perforating element **18**, designed for delivery pressurized water coming from the pressurized water generating members of the coffee machine.

[**0040**] More specifically, the top perforating element or assembly **18** affects the top surface of the coffee capsule **10** to perforate it, as the head is closed, to allow pressurized water supplied by the delivery duct **20** to enter the capsule **10**.

[**0041**] Said capsule **10** comprises an outer film element, which can be perforated by the top **18** and bottom **17** perforating elements or assemblies, and being provided with an inner rigid filtering construction holding the ground coffee powder.

[**0042**] At the top thereof, the filtering rigid construction of the coffee capsule or cartridge **10** comprises a plurality of channels allowing top water entering the hole formed by the top perforating element **18** to be distributed at the top.

[**0043**] Further, according to the present invention, the delivery head **1** comprises moreover coffee capsule **10** ejecting means, including a capsule ejecting fork element **21** pivoted to the pivot pin **30** applied to the bottom supporting element **5** and including an annular portion **22** designed for encompassing the top of the coffee capsule **10**, which is suitably provided with a perimetrical bearing edge portion **23**.

[**0044**] The delivery head **1** according to the present invention operates as follows.

[**0045**] At the start, the delivery head **10** is arranged in an open position, shown for example in FIG. **2**, in a ready condition for receiving a coffee capsule or cartridge **10**, which is partially engaged in the capsule recess **9**, to locate the powder capsule near the bottom perforating assembly or element **17**, without causing said perforating element **17** to perforate, at the start, the bottom surface of the coffee cartridge or capsule **10**.

[**0046**] Then, the head **1** is closed by actuating the lever **11** under a downward pressure, to cause the top supporting element **6** to be closed on the bottom supporting element **5**.

[**0047**] As the top supporting element **6** is closed on the bottom supporting element **5**, said top supporting element **18** will perforate the top surface of the coffee capsule or cartridge **10**.

[**0048**] Then pressurized water is delivered which, through the delivery duct **20** and the hole formed by the top perforating element **18** can enter the coffee capsule and diffuse therethrough owing to the provision of suitable channels formed inside said capsule **10**.

[**0049**] Thus, the overheated water pressure will cause a further perforation of the bottom surface of the capsule by the bottom perforating element **17**, thereby said bottom surface is pressed downward against the bottom perforating element **17** in a subsequent operating step, with respect to the perforation of the top surface of the coffee capsule **10**.

[**0050**] In particular, water passes through the capsule **10** and exits the delivery nozzle **16** thereby providing the coffee beverage, which is collected in a cup or the like, not specifically shown.

[**0051**] At the end of the delivery operation, the top supporting element **6** is raised by operating the lever **11** pivoted to the pivot pin **31**.

[0052] In particular, as the top supporting element **6** is raised, also the fork element **21** is raised owing to the provision of tooth elements formed on the fork element **21** and cooperating with respective slanted planes or surfaces of said top supporting element **6**, which operate as linear cams **40**.

[0053] Thus, the fork element **21** will rise said capsule **10**, by its annular portion **22**, which engages at the bottom thereof the bearing perimetrical edge portion **23** of the capsule **10**.

[0054] Upon achieving a set inclination, as is clearly shown in FIG. **2**, the capsule **10** will slide on the fork element **21** and, after having passed the annular portion **22**, will fall inside the fork element **21** and, through a specifically designed passage, will be collected in a collecting vessel formed in the upright **2**.

[0055] Then, as the mentioned inclination is exceeded, the tooth element of the fork **21** will be disengaged from the slanted surfaces of the top supporting element **6**.

[0056] Accordingly, the fork element **21** can return to its starting position in which it abuts against the bottom supporting element **5**.

[0057] The annular portion **22** thereof, in particular, will be arranged at the top edge portion of the capsule **10** recess **9**.

[0058] Thus, the coffee machine will be ready for delivery a new coffee cup.

[0059] It has been found that the invention fully achieves the intended aim and objects.

[0060] In fact, the invention provides a delivery head for espresso coffee machines which is adapted to provide a perfect infusion of the coffee beverage, and, moreover, being of very easy and safe operation.

[0061] In practicing the invention, the used materials, and the contingent size and shapes can be any, according to requirements and the status of the art.

1. A delivery head for espresso coffee machines, characterized in that said delivery head comprises a top supporting element pivoted to a bottom supporting element, said bottom supporting element being made rigid with a body of said machine; said bottom supporting element comprising an infusion recess, designed for receiving a coffee holding capsule; said delivery head further comprises an operating lever which operates at least one of said support elements to define at least an open capsule loading and unloading position, and a coffee delivery closed position, said head further including perforating means for progressively perforating said capsule and capsule ejecting means.

2. A delivery head, according to claim 1, characterized in that said top supporting element comprises a top cover and said bottom supporting element comprises a bottom cover.

3. A delivery head, according to claim 1, characterized in that said driving lever is pivoted to said top supporting element for driving said top supporting element.

4. A delivery head, according to claim 1, characterized in that said closed delivery position is stably held so as to resist against a delivery pressure, by locking means.

5. A delivery head, according to claim 4, characterized in that said locking means comprise a locking lever pivoted to said top supporting element at a locking lever pivot pin, and having a hook portion operating on a locking peg rigid with said bottom supporting element.

6. A delivery head, according to claim 1, characterized in that said delivery means comprises a delivery nozzle coupled at a bottom thereof to said bottom supporting element, at an outlet hole formed through a bottom of said capsule recess.

7. A delivery head, according to claim 6, characterized in that in said capsule recess is arranged a bottom perforating element, having a circular tapering cross section, adapted to perforate the bottom of said capsule as said capsule is pressed against said bottom perforating element by an overheated water pressure, which operation is performed after closing said head after having perforated a top surface of said capsule.

8. A delivery head, according to claim 7, characterized in that a quadrangular cross-sectional pyramidal top perforating element coupled to a top perforating support in turn coupled to said top supporting element is moreover provided.

9. A delivery head, according to claim 8, characterized in that said top perforating supporting element comprises at lest a delivery duct, adjoining said top perforating element, for delivering pressurized water coming from pressurized water generating elements of said coffee machine.

10. A delivery head, according to claim 9, characterized in that said top perforating element affects the top surface of said capsule for perforating said top surface as said head is closed, to allow pressurized water coming from a delivery duct to pass to the inside of said capsule.

11. A delivery head, according to claim 1, characterized in that said capsule comprises an outer film to be perforated by said top and bottom perforating element, and comprising, in the inside thereof, a ground coffee holding filtering rigid construction.

12. A delivery head, according to claim 11, characterized in that said capsule rigid filtering construction comprises, at a top thereof, a plurality of channels for allowing hot water to be distributed on the top, said water entering a hole formed by said top perforating element.

13. A delivery head, according to claim 1, characterized in that said capsule ejecting means comprise a capsule ejecting fork element pivoted to a pivot pin applied to said bottom supporting element and including an annular portion encompassing the top of said capsule.

14. A delivery head, according to claim 13, characterized in that said fork element is adapted to be raised by raising said top supporting element, said fork element comprising a plurality of tooth elements formed therein and cooperating with respective slanted surfaces of said top supporting element, said slanted surfaces operating as linear cams.

15. A delivery head, according to claim 14, characterized in that said ejecting fork element, as said top supporting element is at first opened, is held in a rest position thereof.

16. A delivery head, according to claim 1, characterized in that upon unloading said capsule, said top supporting element starts to disengage from said fork element and returning, by gravity, to its rest position.

17. A delivery head, according to claim 1, characterized in that said delivery head comprises a plurality of linear cams disengaging said fork element from said top supporting element during an opening operation.

18. A delivery head, according to claim 1, characterized in that said delivery head comprises an ejecting device designed for automatically ejecting said capsule for introducing said capsule in an ejected capsule vessel upon ending the coffee beverage delivery operation and upon raising said top supporting element.

19. A delivery head, according to claim 1, characterized in that said capsule comprises a perimetrical bearing edge portion.

20. A delivery head, according to claim 1, characterized in that said delivery head, in an open position thereof, is ready for receiving a capsule which is partially engaged in the capsule recess, thereby causing said capsule to abut near the bottom perforating element without causing said bottom perforating element to perforate, at least at the start, the bottom surface of said capsule.

21. A delivery head, according to claim 1, characterized in that said delivery head is closed by operating said lever and providing a downward directed pressure to cause said top supporting element to be closed on said bottom supporting element.

22. A delivery head, according to claim 1, characterized in that, as said top supporting element is closed on said bottom supporting element, said top perforating element perforates the top surface of said capsule.

23. A delivery head, according to claim 1, characterized in that, after having closed said delivery head, overheated pressurized water, introduced into said capsule, causes a perforation of the bottom surface of said capsule by said bottom perforating element.

24. A delivery head, according to claim 1, characterized in that, upon ending a delivery operation, said top supporting element is raised by operating said lever, thereby also raising said fork element, due to the provision of said tooth element formed on said fork element and cooperating with slanted surfaces of said top supporting element.

25. A delivery head, according to claim 24, characterized in that said fork element rises said capsule by said annular portion thereof which engages at a bottom the perimetrical bearing portion of said capsule.

26. A delivery head, according to claim 24, characterized in that, upon achieving a set inclination, said capsule slides on said fork element and, after having passed said annular portion, falls inside said fork element and, through a passage, is collected in a collecting vessel formed in said upright.

27. A delivery head, according to claim 26, characterized in that, after having exceeded a set inclination of said fork element, said tooth elements of said fork element are disengaged from said slanted surfaces of said top supporting element, thereby said fork element can return to its starting position, in abutment on said bottom supporting element, said annular portion thereof being arranged at said top edge portion of said capsule recess.

* * * * *