US 20020078831A1

(19) United States

(12) Patent Application Publication (10) Pub. No.: US 2002/0078831 A1

Cai (43) Pub. Date: Jun. 27, 2002

(54) CARTRIDGE AND METHOD FOR MAKING FLUID COMESTIBLES

(76) Inventor: **Edward Zhihua Cai**, Corvallis, OR (US)

Correspondence Address:
Edward Z. Cai
4767 NW Jeanice Place
Corvallis, OR 97330 (US)

(21) Appl. No.: **09/748,495**

(22) Filed: **Dec. 22, 2000**

Publication Classification

(51) **Int. Cl.**[7] **A47J 31/00**
(52) **U.S. Cl.** **99/295**

(57) **ABSTRACT**

A cartridge for use with a mounting head for the preparation of fluid comestibles comprising a cartridge inlet, a chamber connected to said cartridge inlet for containing suitable flavor-containing or particle materials, a cartridge outlet connected to said chamber and a handle enabling a user to hold the handle to attach and secure the cartridge inlet to the mounting head to allow the liquid to be delivered under pressure through the flavor-containing or particle materials in the chamber, through the cartridge outlet and directly into a receptacle such as a cup or carafe for consumption, thereby dramatically simplifying the preparation of the fluid comestibles and relieving the user from the tedious cleaning work. The handle comprising at least part of the wall of the chamber, which is sufficiently rigid. The cartridge inlet has a cross-section area significantly smaller than that for the chamber to reduce the force exerted by the liquid pressure to the cartridge inlet, thereby lowering the risk of breaking the seal between the cartridge inlet and mounting head. The cartridge outlet may have a restrictive opening such as an orifice for forming a high-speed fluid jet or stream and an arrangement to allow it to interact with air to generate a foamy head for the fluid comestible. A freshness promoter can be used to prolong the freshness of the flavor-containing materials.

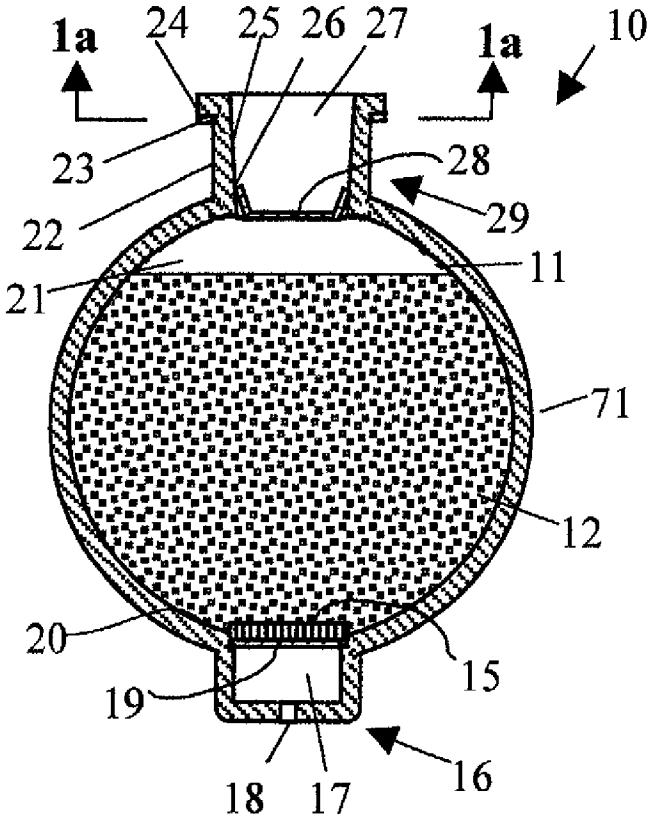

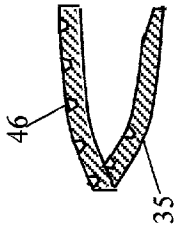

FIG. 2a

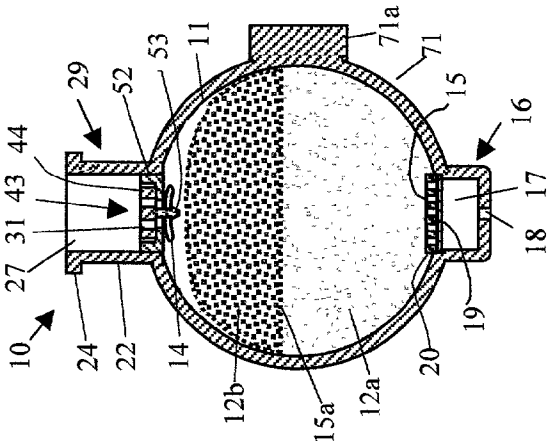

FIG. 3

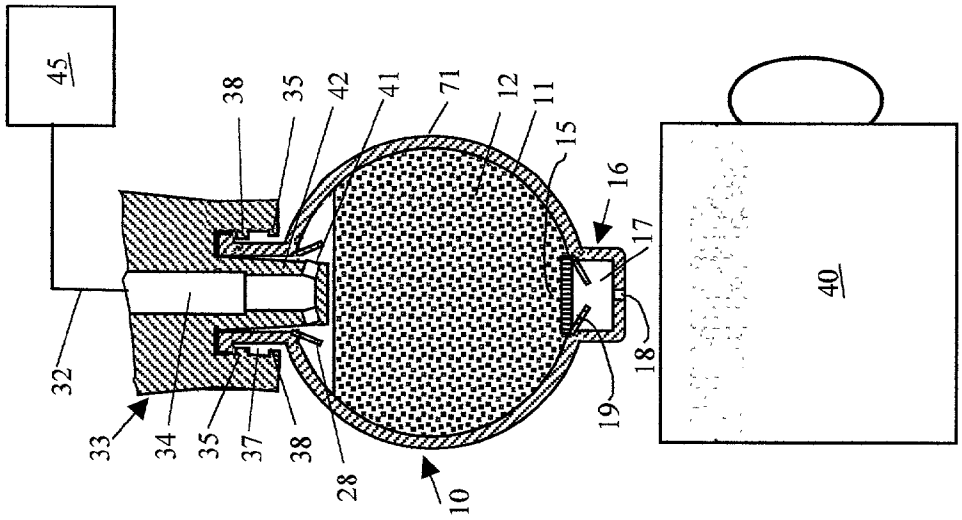

FIG. 2

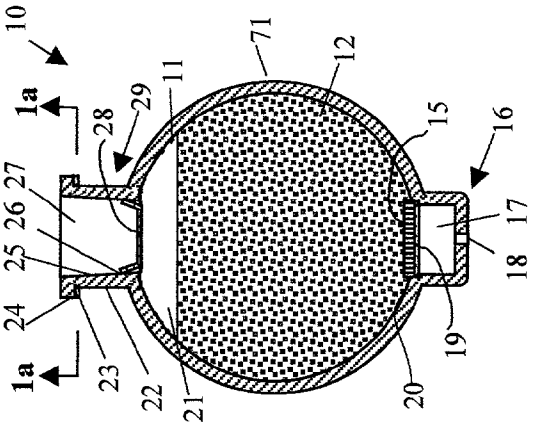

FIG. 1

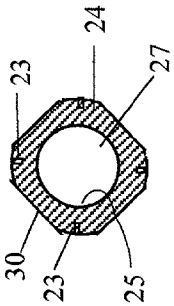

FIG. 1a

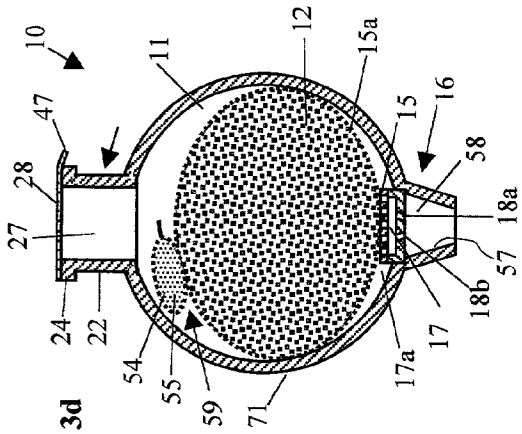

FIG. 3d

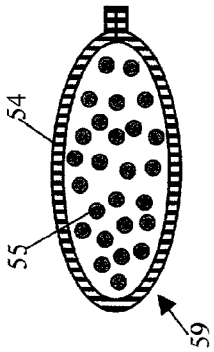

FIG. 3e

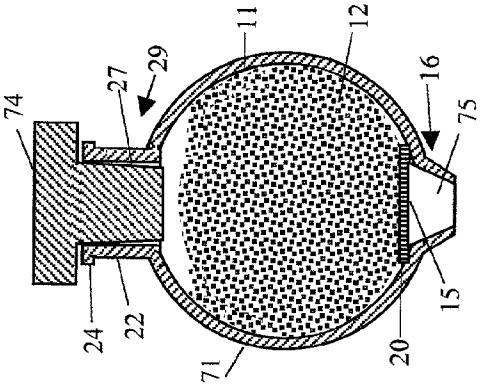

FIG. 3c

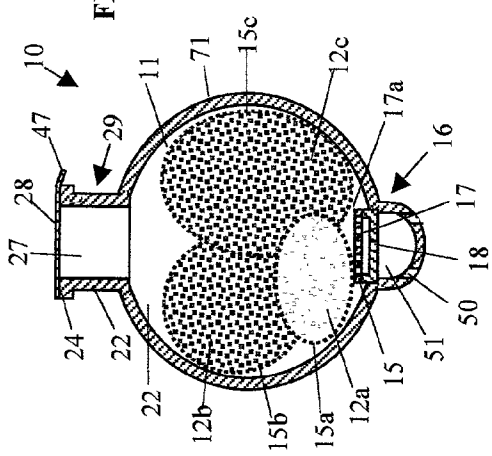

FIG. 3a

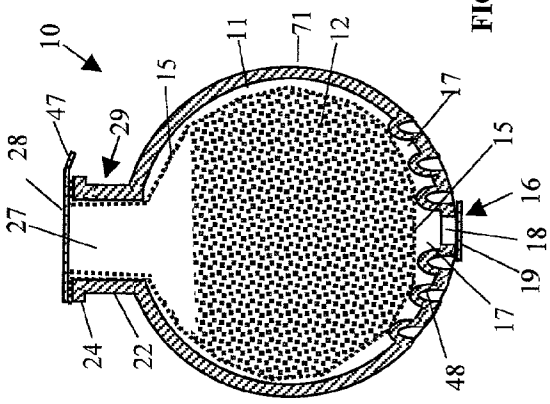

FIG. 3b

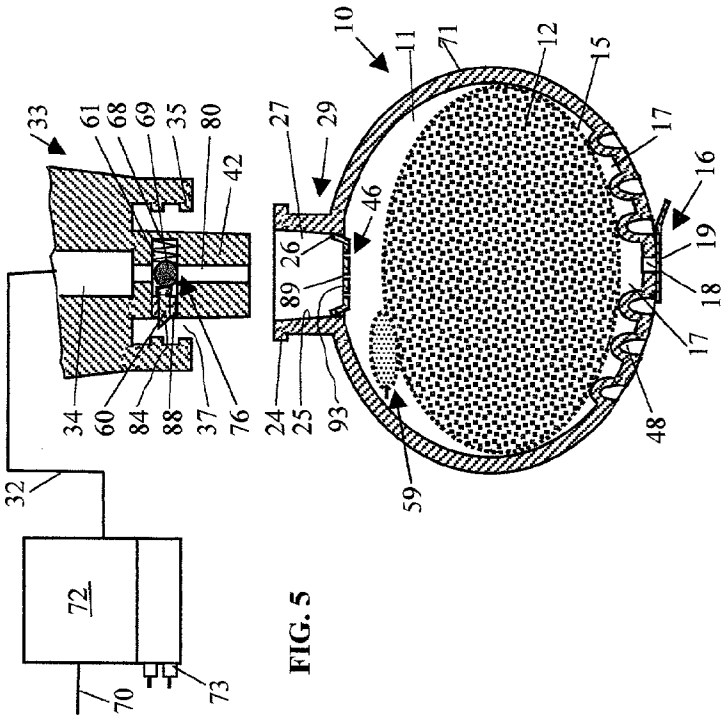

FIG. 5

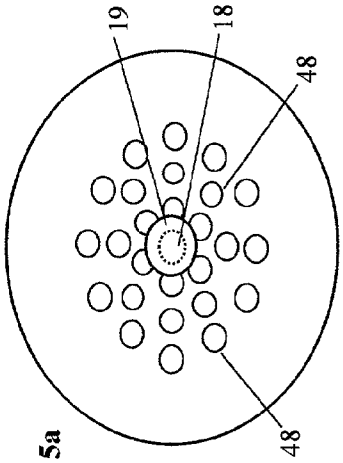

FIG. 5a

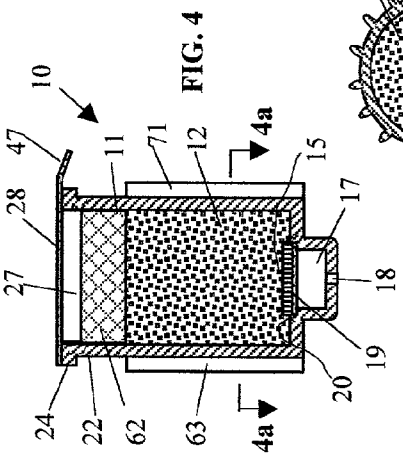

FIG. 4

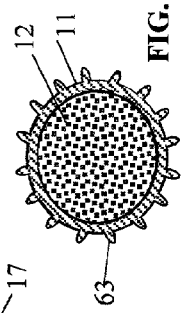

FIG. 4a

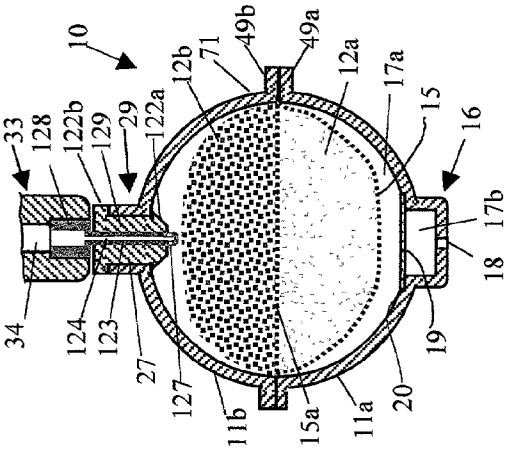

FIG. 5b

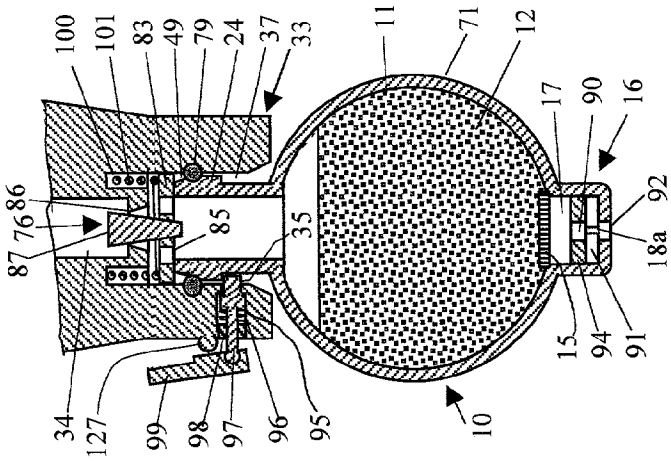

FIG. 5d

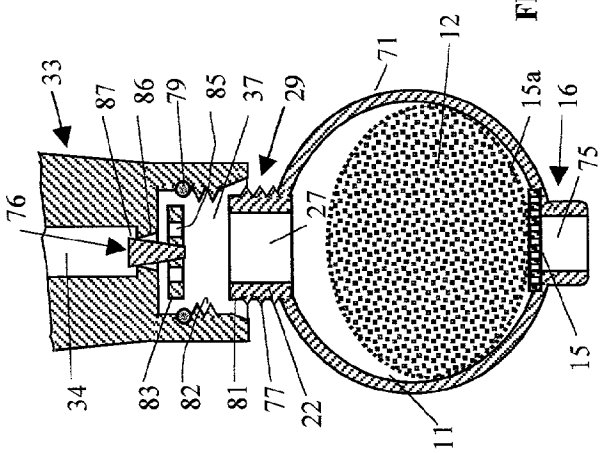

FIG. 5c

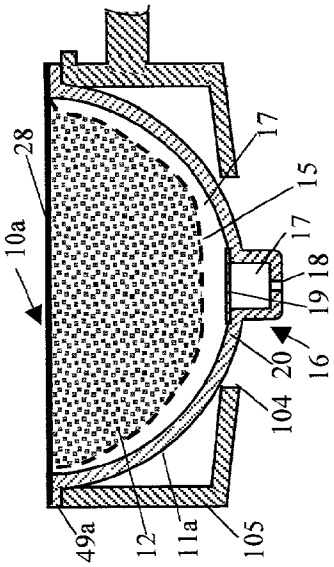

FIG. 6

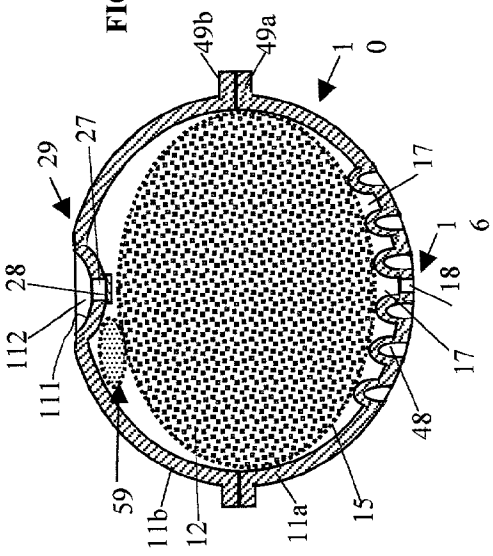

FIG. 7b

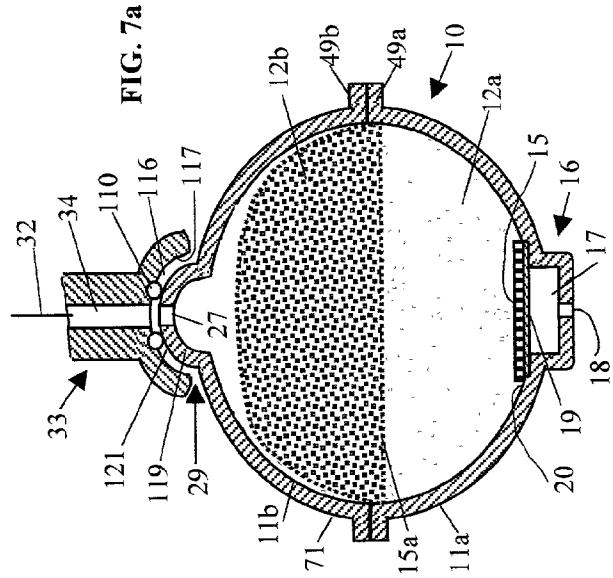

FIG. 7a

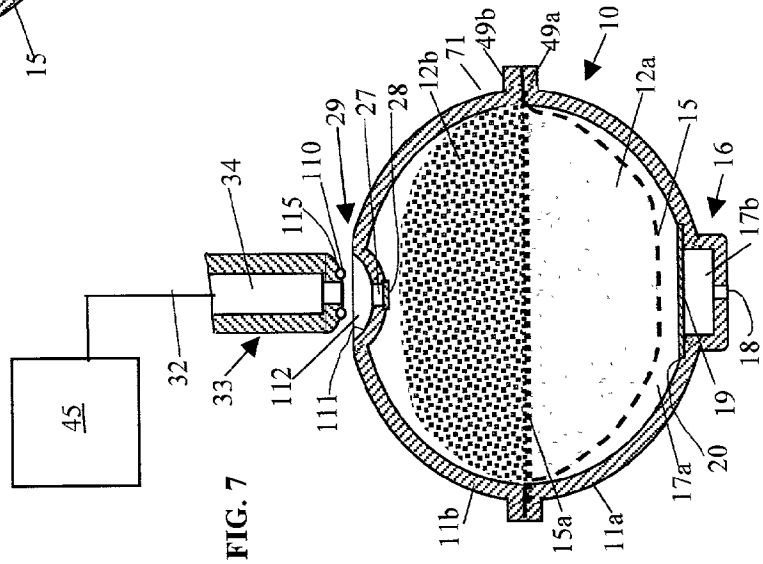

FIG. 7

CARTRIDGE AND METHOD FOR MAKING FLUID COMESTIBLES

FIELD OF THE INVENTION

[0001] The present invention relates to a cartridge and method for making drinks and other fluid comestibles. Particularly, the present invention relates to a cartridge and method that allows a user to make better-tasting beverages in faster, safer and a cleaner manner.

BACKGROUND OF THE INVENTION

[0002] It has been known for centuries to interact flavor-containing or absorbent materials with water to prepare coffee, tea, espresso, milk, cocoa, herb, filtered water, soup and other fluid comestibles. The steeping of roasted coffee grounds under ambient pressure emerged in late 14th century and has been automated with the inventions of stove-top percolator in 1820's, electric percolator in 1950's, and automatic drip coffee maker in the 1970s. The steeping of roasted coffee under elevated pressure, resulting in the well-known espresso drinks, emerged with the invention of steam espresso machine in 1910's and later improved by the inventions of piston espresso machine in 1940's and pump espresso machine in 1960's.

[0003] Currently, coffee and espresso drinks are mostly made by measuring and filling loose coffee grounds into a filter basket, mounting the basket to the brew head of an espresso machine or coffeemaker, delivering hot water through the grounds either under ambient or high pressure, and receiving the extraction in a cup or a carafe. After enjoying the coffee or espresso, the user must face the tedious tasks of removing the dripping basket, discarding the wet grounds, cleaning the filter basket, the machine, countertop and the carafe, and replacing the filter basket and carafe back into the machine. The above process, although simple, involves too many steps and is too time-consuming for some users, especially when espresso drinks are concerned. In addition, it is messy since most users will splutter the loose coffee grounds when filling the filter basket and drip brown coffee around the kitchen when discarding the wet, used grounds. Furthermore, the quality of the brew, especially espresso, is inconsistent due to many difficult-to-repeat process variables such as ground size, the degree of tamping of the grounds and the amount of grounds.

[0004] To make latte, cappuccino, mocha and other milk-containing coffee drinks, the user must heat or froth milk with steam from a steam source such as a steam or pump espresso machine. The heated or frothed milk is then mixed with espresso by pouring milk into espresso or vice versa. To heat or froth milk the user inserts a steam nozzle into the milk in a cup or pitcher, bobs the cup up and down to generate foam, and watches the milk carefully to avoid overheating or overflow. Such milk frothing is intimating to most consumers, which contributes in preventing most people from enjoying latte, cappuccino and mocha at their homes.

[0005] To simplify the process of making coffee and espresso, it has been proposed to seal ground coffee in individual air-impermeable packages. For example, coffee pouches, comprising a dose of ground coffee for one or more cups of coffee loosely packed in a paper filter bag and sealed in an air-impermeable film pouch, are available in most hotel rooms having a coffeemaker. To make coffee, the user tears open the film package and place the paper filter bag in the filter basket of the coffeemaker. Such coffee pouch, although relieving the users from measuring and handling loose coffee grounds, requires them to perform much tedious work such as cleaning the filter basket, machine, countertop and carafe, mounting the basket to the machine, and replacing the filter basket and carafe after cleaning back into the coffeemaker.

[0006] Such coffee pouch concept has also been applied to espresso. In "espresso pods" such as those offered by STARBUCKS Coffee company and illy espresso of the America, the dose of coffee grounds is compactly packed in the paper filter bag and then sealed in an air-impermeable film pouch. To make espresso, the user opens the sealed pouch, places the pod into the holder and places the holder firmly into the brew head before starting the brewing. Such espresso pod removes the variability of tamping the coffee grounds and relieves the user from measuring and handling loose grounds. Like coffee pouch, the espresso pod, however, requires the users to perform much tedious work such as cleaning the holder, machine and countertop, mounting the holder to the machine, and replacing the holder after cleaning back into the machine.

[0007] Fond, Lavanchy and Yoakim in U.S. Pat. No. 5,656,316 and Favre in U.S. Pat. No. 5,472,719 taught a sealed coffee cartridge that is to be placed into a brewing chamber of a holder. The holder is then mounted in an espresso machine. To make coffee or espresso, the cartridge is pierced by a needle for injection of water into the cartridge and by perforator tips or relief surface elements for the flow of the fluid comestibles from the cartridge. Compared to espresso pods, such sealed cartridges do not need the air-impermeable film pouch to prevent the loss of aroma and retain the freshness of the coffee grounds for prolonged period of time, thus saving the user the step of opening the film pouch. However, like the espresso pods the sealed cartridges also require the much tedious work such as cleaning the holder, machine and countertop, mounting the holder to the machine, and replacing the holder after cleaning back into the machine. In addition, there exists some risk that the user's fingers get injured by the needle and perforator tips used to pierce the sealed cartridges.

[0008] Accordingly, the present invention intends to provide a cartridge and method to relieve the users from the tedious work of cleaning the holder or filter basket, machine and countertop. The present invention also intends to provide a cartridge and method to drastically simplify the process of making drinks and other liquids and reduce the time needed. The present invention further intends to provide a package and method for improving the freshness of the coffee grounds the taste of the drinks.

SUMMARY OF THE INVENTION

[0009] In accordance with the present invention, there is provided a new cartridge and method for making fluid comestibles such as cappuccino, latte, mocha, espresso, coffee, tea, hot chocolate, soup or frothed milk. The cartridge comprises a cartridge inlet for connecting to a mounting head and introducing water under pressure into the cartridge, a chamber connected to said cartridge inlet for containing suitable flavor-containing or particle materials

and for allowing the interaction of the materials with water under pressure therein to form the fluid comestibles, a cartridge outlet connected to the chamber for discharging the fluid comestibles, and a handle enabling a user to hold the handle to attach and secure the cartridge inlet to the mounting head. The cartridge may contain one or more types of flavor-containing or particle materials in the chamber to make the desired beverage. In one embodiment, the chamber contains only roasted ground coffee supported on a filter sealed to the bottom of the chamber for making coffee or espresso. In another embodiment, chamber comprises granular or powdered milk supported on a first filter (or a separator) sealed to the bottom of the chamber and roasted ground coffee separated from the granular or powdered milk by a second filter. The first filter (or a separator) has larger openings than the second filter to prevent the gel or gel-like protein materials in the granular or powdered milk from clogging the first filter (or a separator). A freshness promoter is provided to prolong the freshness of the flavor-containing materials in the chamber.

[**0010**] The cartridge inlet, chamber, cartridge outlet may be formed as one single and integral part and adapt a generally spherical or cylindrical shape to increase the cartridge's resistance to liquid pressure and lower manufacturing cost. In one embodiment, the handle comprises the wall of the chamber, which is sufficiently rigid to prevent deformation or damage. In another embodiment, the handle comprises only part of the wall of the chamber or may be even a separate part attached to or formed on the cartridge body.

[**0011**] The cartridge outlet comprises an opening for issuing the beverage and an arrangement to allow the beverage from the opening to enter a receptacle such as cup or carafe directly without contacting any other parts, thus relieving the user from the tedious work of cleaning the machines used to make beverage as required by all existing cartridge. The opening can be a restrictive opening such as a nozzle or orifice to produce a high-speed fluid jet or stream. In one embodiment, the arrangement allows the high-speed fluid stream or jet from the restrictive opening to collide or interact with a solid surface such as the inner wall of the cartridge outlet, thereby producing foamy head or crema for the fluid comestible. In another embodiment, the arrangement allows the high-speed fluid stream or jet to inject directly into the receptacle such as a cup or carafe. In the process, the high-speed fluid stream or jet carries the surrounding air into the fluid comestibles in the receptacle such as a cup or carafe thereby generating foamy head or crema for the fluid comestibles. In another embodiment, the cartridge outlet further comprises a outlet chamber below the restrictive opening for receiving the high-speed fluid stream or jet and causing the mixing of air with fluid, thereby producing fine air bubbles. In another embodiment, the cartridge outlet further comprises at least one additional restrictive opening. These restrictive openings being so constructed that the resulting high-speed fluid streams or jets will meet or collide in the space inside or outside the cartridge outlet, thereby generating foamy head or crema for the fluid comestibles. The restrictive opening can be normally very small or closed and but can increase in size when the pressure above increases.

[**0012**] To lower the risk of breaking the seal between the cartridge inlet and the mounting head, which may cause personal injury, and to reduce the structural strength on the cartridge inlet, the cartridge inlet is constructed to have a cross-section area significantly smaller than the chamber. The cross-section area of the cartridge inlet can be approximately 1/200 to approximately ½, preferably 1/100 to ¼ that for the chamber. A valve can be located in the cartridge inlet to prevent the flavor-containing materials and the pressurized liquid from gushing out of the cartridge inlet in case that a user removes the cartridge from the mounting head when the cartridge is still under pressure. The cartridge inlet may also comprise a safety element to prevent the user from removing the cartridge when the cartridge is still under pressure. A valve may also be located in the cartridge inlet or the cartridge outlet to prevent the dripping of the wet flavor-containing materials or chamber before or during the removal of the used cartridge.

[**0013**] The mounting head for the cartridge inlet comprises a cylindrical chamber, a flow channel connected to a pressurized water source, an extension tube having a smaller diameter near its end and being connected to the flow channel, and two parallel spiral- or helix-shaped ledges or ridges as the lock element to form a bayonet joint with the flange. The cylindrical chamber is dimensioned to receive cylindrical body of the cartridge inlet and to allow the flange of the cartridge inlet to move upwards along the spiral-shaped ledges as one rotates the cartridge. The extension tube is extended a large distance beyond the bottom of the cylindrical chamber of the mounting head to act as a guide for the user to insert the extension tube into the cylindrical opening of the cartridge inlet and to mount the cartridge to the mounting head.

[**0014**] To make the beverage, one simply holds the handle of the cartridge to secure the cartridge inlet to the mounting head, and then causes the liquid to be delivered under pressure through the flavor-containing or particle materials in the chamber and through the cartridge outlet directly into a receptacle such as a cup or carafe for consumption. This is a simple two-step process to make beverages like espresso, latte, cappuccino and mocha, compared to the complex process employed today. In addition, there are no machine, no baskets and no holders to clean after preparing the fluid comestibles, thus relieving the user from the traditional tedious cleaning work after making coffee or espresso.

[**0015**] In another embodiment of the invention, the cartridge comprises a flavor-containing or particle materials, a filter for the flavor-containing or particle materials, a lower body comprising an lower chamber having a generally closed end and a generally open end, a first flange formed at said generally open end, and a cartridge outlet formed at the generally closed end for discharging the beverage, and an upper body comprising an upper chamber having a generally closed end and a generally open end, a second flange formed at said generally open end, and a cartridge inlet formed at the generally closed end. The cartridge inlet have a sealing surface for forming a hermetic seal with a mounting head and a liquid opening located near the center part of the sealing surface for introducing the pressurized liquid from the mounting head into the upper chamber. The upper and lower bodies being sealed together at said first and second flanges to form a chamber to contain the flavor-containing or particle materials. The liquid opening has a sufficiently small size to lower the force exerted by the pressurized liquid to the hermetic seal thereby improving the hermetic seal,

whereby, in use, the sealing surface of the cartridge inlet is brought against the mounting head to form the hermetic seal around the liquid opening thereby allowing the pressurized liquid to be introduced into the chamber wherein it interacts with the flavor-containing or particle materials to form the beverage.

[0016] It is an object of the present invention to provide a cartridge and method for making better tasting beverages such as better tasting coffee, espresso, milk, soup, hot chocolate, cappuccino, latte, mocha or tea.

[0017] It is a further object of the present invention to provide a cartridge and method to dramatically simplify the process of making beverages.

[0018] It is a further object of the present invention to provide a cartridge and method to relieve the users from the tedious cleaning work after preparing beverages.

[0019] It is a further object of the present invention to provide a cartridge, cartridge connector (or mounting head), and method to reduce the safety risk to the user associated with hot or pressurized liquid.

[0020] It is a further object of the present invention to provide a cartridge that can be manufactured at very low cost.

[0021] It is a further object of the present invention to provide a cartridge that can produce a beverage with a visually appealing layer of crema or foamy head.

[0022] It is a further object of the present invention to provide a package and method to preserve the freshness and aroma of the flavor-containing materials like roasted coffee beans or grounds.

[0023] It is a further object of the present invention to provide a cartridge and method to make beverage fast thus reducing the waiting time for customers or users.

[0024] These and other objectives and advantages of the present invention will become apparent from the following description of the preferred embodiments, taken together with the accompanying drawings.

DESCRIPTION OF THE DRAWING

[0025] The accompanying drawing illustrates diagrammatically non-limitative embodiment of the invention, as follows:

[0026] **FIG. 1** is a sectional view of a cartridge containing flavor-containing materials to be extracted;

[0027] **FIG. 1***a* is a sectional view along line **1***a*-**1***a* of **FIG. 1**;

[0028] **FIG. 2** is a sectional view of the cartridge of **FIG. 1** and a cartridge connector in a connected position to allow the extraction of the flavor-containing materials by pressurized water;

[0029] **FIG. 2***a* diagrammatically illustrates one of the support helixes of **FIG. 2**;

[0030] FIGS. **3**-**3***d* show several modified versions of the cartridge of **FIG. 1**;

[0031] **FIG. 3***e* is a sectional view of the freshness promoter for roasted coffee;

[0032] **FIG. 4 a** section view of an alternative beverage cartridge;

[0033] **FIG. 4***a* is a sectional view along line **4***a*-**4***a* of **FIG. 4**;

[0034] **FIG. 5** is a sectional view of modified version of the cartridge of **FIG. 1** and a cartridge connector;

[0035] **FIG. 5***a* is a bottom view of the cartridge of **FIG. 5**;

[0036] **FIG. 5***b* is a sectional view of another modified version of the cartridge of **FIG. 1** and a cartridge connector wherein the connection is a needle-septum connection;

[0037] **FIG. 5***c* is a sectional view of another modified version of the cartridge of **FIG. 1** and a cartridge connector wherein the connection is made by thread;

[0038] **FIG. 5***d* is a sectional view of another modified version of the cartridge of **FIG. 1** and a cartridge connector wherein the connection is made by simply pushing the cartridge into the cartridge connector;

[0039] **FIG. 6** is a sectional view of a cartridge supported by a holder in a manner that the beverage will not contact the holder;

[0040] **FIG. 7** is a sectional view of a cartridge and a cartridge connector wherein the connection is made by pressing the cartridge connector against the cartridge inlet;

[0041] **FIGS. 7***a* and **7***b* are the sectional views of two modified versions of the cartridge in **FIG. 7**.

DETAILED DESCRIPTION OF THE PREFERRED EMBODIMENTS

[0042] **FIG. 1** shows a cartridge **10** and **FIG. 2** shows the cartridge in use for making beverage having a foamy head or crema. Cartridge **10** comprises a cartridge inlet **29** having a generally cylindrical body **22**, a cylindrical opening **27** with a sloped internal surface **25** and a generally circular flange **24** having four cuts **30** (**FIG. 1***a*) as the lock element for connecting to a mounting head **33**. The mounting head **33** can be hand-held or fixed in position. It comprises a cylindrical chamber **37**, a flow channel **34** connected to a pressurized water source **45** through conduit **32**, an extension tube **42** having a smaller diameter near its end and being connected to channel **34**, and two parallel spiral- or helix-shaped ledges or ridges **35** and **38** as the lock element to form a bayonet joint with flange **24**. The cylindrical chamber **37** is dimensioned to receive cylindrical body **22** and to allow the flange **24** to move upwards along the spiral-shaped ledges as one rotates the cartridge. The extension tube **42** of the mounting head **33** is extended a certain distance beyond the bottom of the chamber **37** to act as a guide for the user to insert the extension tube into the cylindrical opening **27** and to mount the cartridge to the mounting head. The cylindrical opening **27** of the cartridge inlet is dimensioned to form a water-tight seal with the extension tube.

[0043] To minimize the hydraulic force acted on the cartridge inlet by the pressure in the cartridge thus reducing the potential pressure hazard to the user and the strength requirement for the cartridge inlet, the cross-section area of the cylindrical opening **27** is adapted to be significantly smaller than that for the chamber. The hydraulic force is believed to equal to the product of the cross-section area of

the cylindrical opening and the pressure in the cartridge. To just appreciate the magnitude of such hydraulic force, the force exerted to a filter holder by the water pressure generated in an espresso machine can be as high as 300 kilograms assuming that the filter holder has an diameter of 2.5 inches and the pressure generated by the espresso machine is 10 bars or 147 psi. The cross-section area of the cylindrical opening **27** can be approximately 1/200 to approximately ½, preferably 1/100 to ¼ of the cross-section area of the chamber **11**at its largest part or near the center of the chamber.

[**0044**] The flange **24** can adapt other shapes or forms such a non-circular flange or a circular flange with two cuts. The spiral- or helix-shaped ledges or ridges can have more or less than one turn such as one turn, one half turn, a quarter turn or one sixth turn, and can be replaced by other elongated protrusions trending upwards along the wall of the cylindrical chamber **37**. To improve the seal between the cylindrical opening **27** and the extension tube **42**, a gasket or O-ring may be mounted on the outer wall of the extension tube or the top of the cylindrical chamber **37**. A plurality of tilted holes **41** are formed on the extension tube for spraying or distributing water uniformly. The tilted holes **41** is tilted downwardly to reduce the risk of harming the user by hot water stream if the cartridge is removed when the potentially very hot or pressurized water is not turned off yet.

[**0045**] A barrier film **28** is attached to the lower part of the cylindrical opening **27** for preventing or impeding the transport of gaseous compounds such as oxygen, water, flavor or aroma through the cartridge inlet. The internal surface **25** of cylindrical opening **27** is slightly sloped to facilitate the attaching process (e.g. heat sealing or adhesive bonding) of the barrier film to the internal surface. The barrier film is breakable either by the insertion of the extension tube into the cylindrical opening **27** (refer to **FIG. 2**) or by the pressure of the pressurized water. The barrier film can be a single layer film (e.g. polyethylene, polypropylene, aluminum foil or polyester film), a metallized plastic film (e.g. aluminum or silver coated PET or PP), a co-extruded film (e.g. EVOH, Nylon, PVDC extruded with PE), a laminate (e.g. Al/PE, Al/PP or Al/PET), or adhesive film (e.g. aluminum foil/polyacrylic).

[**0046**] A plurality of protrusions **23** (**FIGS. 1 and 1***a*), preferably of half or partial cylindrical shape, are formed at the underside of the flange **24** to prevent the user to remove the cartridge from the mounting head **33** when the pressure in the cartridge is still high. The protrusions **23** are receivable in the recessed sections **46** (**FIG. 2***a*) on the spiral-shaped ledges or ridges, therefore making it hard for the user to rotate the cartridge when the pressure is high in the cartridge. The helix or spiral-shaped ledges or ridges may be flatter (**FIG. 2***a*) near the top end to make it harder for the cartridge to rotate when the flange **24** is on the top part of the spiral-shaped ledges or ridges. The cylindrical chamber **37** may having a gradually decreasing diameter from bottom to top to allow a close fit between the interior wall of the cylindrical chamber **37** and the flange **24** when the cartridge is mounted (**FIG. 2**), thereby making it harder to move the cartridge and increasing the safety to the user. It is appreciated that certain pins, latches and other mechanical fixtures that can be activated by the pressure in the mounting head or cartridge to lock the cartridge may be used alone or in combination to reduce the pressure hazard and insure the safety to the user.

[**0047**] The cartridge **10** further comprises a generally spherical chamber **11**, a supply of flavor-containing materials or particle materials **12**, a filter **15** for the materials **12**, a barrier film **19** for preserving the flavor or aroma or freshness of the materials **12** and a cartridge outlet **16** for the beverage or fluid, and a handle **71** for enabling a user to hold the handle to attach and secure the cartridge inlet **29** to the mounting head **33**. The handle comprises at least part of the wall of the chamber, which is sufficiently rigid and adapted for the user to hold without causing substantial deformation or damage. The chamber adopts a spherical shape to increase the pressure the cartridge can withstand during the extraction or interaction of the materials **12** with the aqueous media. The spherical chamber **11** is rigid to function as a handle to allow the user to hold the chamber, place the cylindrical opening **27** of the cartridge around the extension tube **42**, push the cartridge upwards, and rotate the cartridge (which causes the flange **24** to move along the helix-shaped ledges upwards) until the cartridge inlet is firmly mounted into the cylindrical chamber **37** of the mounting head. To remove the cartridge, the user holds the spherical chamber **11** (as a handle) to rotate it in the opposite direction. The chamber may comprise a plurality of features such as ridges, ledges, ribs, grooves or spherical dots on its outer surface to make it for the user to hold the chamber **11** and to make the surface feel cool after hot water is forced through the cartridge. Low heating conducting materials such as plastics (e.g. polypropylene, polyester and Nylon) may be used for the chamber reduce the heat conduction to the outer surface of the chamber.

[**0048**] The cartridge outlet **16** comprises a collection chamber or collector **17** for collecting the fluid produced from the flavor-containing materials or particle materials and an opening **18** for discharging the collected beverage or fluid. The beverage is discharged directly into a receptacle **40** such as a carafe or cup for consumption or use, rather than to the bottom of a filter holder that is required the existing or currently known beverage cartridges. Obviously, by avoiding the need for a filter holder, the cartridge **10** is dramatically easier to use than any existing or known beverage cartridges, and will save great amount of time in making beverages such as coffee and espresso drinks for the users at homes and in commercial places like restaurants, fast food, cafes and coffee outlets. Furthermore, since the beverage from cartridge outlet **16** does not contact any part of the beverage making equipment and the cartridge itself can disposed or recycled, the consumers or users do not the need to clean anything after preparing the beverage. This makes process of making coffee, espresso, cappuccino, mocha, latte and other beverages with cartridge **10** much friendlier and less labor intensive than with existing or known beverage cartridges.

[**0049**] The opening **18** can be a small orifice or other type of opening that is restrictive or small enough to produce a high-speed jet or stream of fluid. The high-speed jet or stream, surprisingly, produces a layer of fine foamy head or crema on top of the beverage when received directly in the cup **40**. In addition, the quality and taste of the coffee, espresso, cappuccino, latte, mocha and other beverages is improved when such an orifice or restrictive opening is used in the cartridge. The filter **15** is attached at its peripheral to the bottom **20** at the entrance of the collector **17**. The filter serves the purpose of protecting the orifice or restrictive opening **18** from being clogged by the flavor-containing

materials or particle materials and/or the purpose of preventing the materials from being discharged into the cup. The barrier film **19** is also attached at its peripheral to the bottom **20** of the cartridge below the filter **15** and is breakable by the beverage or fluid from the filter. The filter can be water-permeable materials with sufficient strength when wetted in water, and preferably heat sealable. Examples of suitable materials comprise synthetic cloth, stainless steel or copper mesh filter, non-woven polypropylene sold under trade name Typar or Corovin, spun-bonded polyester sold under trade name Remay, spun-bonded nylon sold under trade name Cerex, and perforated metal or polymer films.

[**0050**] The cartridge outlet **16** of cartridge **10** can be dimensioned to fit into the substantially cylindrical opening **27** of the cartridge inlet **28**, or vice versa, of another identical cartridge. This allows one cartridge to be connected to another by inserting one cartridge's inlet into another cartridge's outlet (or vice versa), therefore making the packaging and storage of the cartridges easier for the manufacturers, retailers and end users more convenient. For example, six, ten or twelve cartridges may be connected in such "inlet into outlet" or "outlet into inlet" manner to form an integrated row for storage on retail shelves or kitchen cabinets.

[**0051**] To reduce the chance of leakage when the cartridge **10** is exposed to high fluid pressure, it is preferred that the cartridge inlet **29**, chamber **11** and cartridge outlet **16** are of an integrated body without any seam. Such a cartridge of an integrated body can be made by blow-molding process. The barrier film **28** may be attached to the cartridge inlet **29** to close the inlet by heat sealing or adhesive bonding. The filter **15** and barrier film **19** can be attached to the bottom of the chamber by heat sealing, adhesive bonding or mechanical sealing. The cartridge inlet, chamber and filter can be made of the same material such as polyester, polypropylene or nylon to facilitate recyclability or reuse of the material, and can be made of degradable materials such as biodegradable poly(lactic acid), thereby reducing the burden to environment.

[**0052**] The flavor-containing materials or particle materials can be coffee grounds, tea, granular milk, cocoa, chocolate, water filtration materials (for making filtered or pure water), soluble food powder (for making soup) sugar, artificial sweetener, powdered creamer, herb or any combination of these materials. The flavor-containing materials or particle materials is filled into the chamber **11** via the cartridge inlet after the filter **15** and the barrier film **15** are attached to the bottom of the chamber **11** above the collector **17**. The amount of materials in the cartridge depends on the volume of fluids to be made from the cartridge. For example, about 3 to ten grams, preferably about 4.5 to 7 grams of coffee grounds may be included in a cartridge to make a single cup of coffee or espresso. About 20 to 50 grams, preferably 25 to 30 grams, of coffee grounds may be included in a cartridge to make five cups of coffee.

[**0053**] When two or more types of materials are included in one cartridge, the materials can be either mixed or separated. For examples, water filtration materials may be positioned above coffee grounds, preferably with a separator in between, to ensure that filtered or pure water is used to extract the coffee grounds to make coffee or espresso. For a cartridge to make late or cappuccino, a supply of coffee grounds is positioned above a supply of granular milk in the cartridge and separated from the milk by a coffee filter. The coffee extraction from the coffee grounds flows downstream to dissolve the granular milk and form cappuccino or latte. The granular milk is maintained in the cartridge by another filter with coarser openings to avoid complete clogging of the filter by the gel or insoluble proteins originally in the milk or as a result of the interaction between the coffee and milk. For a cartridge to make sweet coffee, sugar or artificial sweetener can be mixed with coffee grounds. More specific examples of such cartridges with two or more types of materials will be given later.

[**0054**] The pressurized aqueous media can be the pressurized water from an in-house or in-building plumb system and is heated by an in-line heater. The mounting head **33** can be in a hand-held device connected to the in-line heater by a flexible tube or can be in a counter-top device connected to the in-line heater. The hot water from the in-line heater is delivered to the mounting head and through the cartridge **10** by the pressure in the -house or in-building plumb system. The aqueous media pressurized aqueous media can be produced by a pressurization means such as a pump, pressurized steam or pressurized air in a device or apparatus and can be heated by a heater in the device or apparatus. The mounting head is connected to the pressurization means.

[**0055**] To make beverage or other fluid comestibles with the cartridge **10** of **FIG. 1**, the user simply holds the handle **71** (i.e. the wall of the chamber **11**) to align the opening **27** of the cartridge inlet **29** with the extension tube **42** and to push the cartridge inlet upwards and rotate the cartridge inlet within the cylindrical chamber **37** until it becomes tight. The user then causes the pressurized water to be delivered from the source **45** through the conduit **32**, channel **34**, the flavor-containing or particle materials **12** in the chamber **11** and the cartridge outlet, from which the fluid comestibles is discharged directly into receptacle **40** such as a cup or carafe for consumption. The user then removes the used cartridge **10** to dispose or recycle it. Unlike the other cartridges known in the art, the cartridge **10** requires no holder or brewing chamber and there is no parts to be cleaned after the preparation of the beverage. As a result, cartridge **10** will dramatically simplify the preparation of the fluid comestibles and relieve the user from the tedious cleaning work.

[**0056**] **FIG. 3** shows a modified cartridge **10** that contains a first flavor-containing materials or particle materials **12***a* above filter **15** and a second flavor-containing materials or particle materials **12***b* enclosed by filter **15***a* to form a pouch. For a cartridge to make espresso drinks such latte, cappuccino or mocha, the materials **12***b* is roasted ground coffee and the materials **12***a* is milk powder or granules, chocolate or other materials. It was noted that the gel or gel-like matters in milk or chocolate frequently clogs filter **15***a* if the filter is too fine. Therefore, for milk powder or granules, chocolate or other materials containing insoluble gel or gel-like matters, the filter **15** below should be relatively coarse filter, with an approximate average pore size of about 0.01 mm to 2 mm, preferably of 0.1 mm to 1 mm. The materials **12***b* can also be activated carbon for filtering the water before it reaches the materials **12***a*.

[**0057**] A handle extension **71***a* is formed on the handle **71**, i.e. the sufficiently rigid wall of chamber **11** for making it easier for a user to hold the cartridge. A valve **43** is fitted to

the opening **27** of the cartridge inlet for preventing the flavor-containing materials or particle materials and liquid in the chamber **11** from streaming out of the cartridge inlet if the user removes the cartridge that is still pressurized. The valve comprises a body **52** having an opening, a elastomer member such as a disc **14** for closing the opening of the body **52**, and a keeper **44** having openings **31** and a stem **53** with a enlarged end to keep the elastomer member **14** attached to the stem. The elastomer member **14** can be loaded to seal the opening of the valve body **52**, therefore impeding flavor or aroma loss during the storage of the cartridge and preventing liquid from dripping out of the used cartridge during disposal. It is appreciated that to just reduce the amount of streaming-out of materials **12** and liquid in the chamber the valve **43** can be a simple restrictive opening. It also is appreciated that to stop the dripping of the residual fluid in the cartridge the valve **43** can be located in or above the cartridge outlet **16**.

[**0058**] **FIG. 3***a* shows another modified cartridge **10** that contains flavor-containing materials **12***a,* **12***b* and **12***c* enclosed by filters **15***a,* **15***b* and **15***c,* respectively for form three pouches. The pouches are inserted into the chamber **11** through the cartridge inlet **29**. The materials **12***a,* **12***b* and **12***c* can be the same or different materials. Filter or separator **15** is attached to the collector **17** to prevent the pouches or particles from entering the collector and clogging the orifice or restrictive opening **18**. An outlet chamber **51** is located below orifice **18** for receiving the high-speed fluid jet or stream from the orifice and causing the mixing of air with fluid in the outlet chamber. One or more openings are formed at the bottom of the outlet chamber for discharging fluid and fine air bubbles into a receptacle such as a cup or carafe **40**.

[**0059**] **FIG. 3***b* shows another modified cartridge **10** where the peripheral of the filter **15** is sealed to the cartridge inlet **29** to form a filter bag for containing the flavor-containing materials or particle materials **12**. A plurality of protrusions such as spherical dots, ridges or channels are formed at the bottom of the chamber **11** to form collector **17**, which leads the beverage or fluids from filter **15** to the cartridge outlet **16**. The barrier film **28** has a handle area for the user to pull and remove the film prior to mounting it to the mounting head **33**. The barrier film **18** can be made removable by the user prior to mounting the cartridge to the mounting head or made breakable by the beverage or fluid from the filter **15**.

[**0060**] **FIG. 3***c* shows another modified cartridge **10** where the opening **27** of cartridge inlet **29** is sealed by a cap or plug **74** that is removable by the user. The flavor-containing materials or particle materials **12** is directly on the filter **15**. In use, the beverage form the filter is discharged through outlet **75** directly to a receptacle such as a cup or carafe **40**. This cartridge is refillable by the user. To refill, the user discards the used, wet materials **12**, dry the empty cartridges if necessary, fill the chamber **11** with the desired new materials **12** and replace the cap or plug **74**.

[**0061**] **FIG. 3***d* shows another modified cartridge **10** comprising a freshness promoter **59** located in chamber **12** for prolonging the freshness of the roasted and ground coffee. The freshness promoter comprising a supply of reactive materials **55** that can react with water vapor in said sealed compartment, thereby impeding the deterioration of the coffee grounds or/and react with the carbon dioxide released by coffee grounds, thereby preventing over pressurization of the cartridge as a result of the released carbon dioxide and a separator **54** for enclosing the reactive materials or preventing the reactive materials from contacting or contaminating the coffee grounds. The reactive materials can be lime (e.g. calcium oxide) or other oxide of alkali metals and alkaline earth metals. The separator is permeable to carbon dioxide and water vapor to allow them to pass through readily and react with the reactive materials. It is preferably made from a hydrophobic porous film such as a porous polypropylene, PTFE, PVDF or polyethylene film, so that the liquid water from the cartridge inlet can not reach and leach out the reactive materials.

[**0062**] A freshness promoter can also be used to prolong the freshness of the roasted coffee beans in a package having a sealed compartment such as a sealed coffee bag or container (not shown). It is known that when freshly roasted coffee beans is sealed in a bag or container the pressure therein will increase due to the gradual release of carbon dioxide. Various check valves have been used to release the carbon dioxide without letting oxygen in. Such check valves, however, also releases the aroma. Water vapor is known to cause the deterioration of the roasted coffee beans, but such check valve can not remove water vapor. The freshness promoter **59** contains reactive materials **55** such as lime (e.g. calcium oxide) or other oxide of alkali metals and alkaline earth metals can absorb both water and carbon dioxide, therefore providing a simple solution for both well-known problems for the storage of freshly roasted coffee beans. A plurality of freshness promoter **59** may be placed in one package of freshly roasted coffee beans.

[**0063**] Unlike the cartridge of **FIG. 3***a,* this modified cartridge of **FIG. 3** comprises two or more orifices or restrictive openings **18***a* and **18***b* which are so constructed that the high-speed fluid streams or jets produced from the orifices meet or collide in the space **58**. Such collision between two more high-speed jets causes the inclusion of fine air bubbles into the fluid. The fine air bubbles in the fluid become a foamy head or crema after the fluid comestible is received in receptacle **40** such as a cup or carafe. It is also found that a foamy head is produced in the receptacle **40** when the high-speed fluid jets or streams do not collide with each other in the space **58** but instead collide with the inner surface **57** of the cartridge outlet **16**. It is also found that a cartridge with only one orifice **18***a* that is tilted to allow the steam jet to collide with the inner surface **57** can produce a beverage with a thick foamy head or crema in the receptacle **40**.

[**0064**] **FIGS. 4 and 4***a* shows a modified cartridge **10** that has a cylindrical chamber **11** and a plurality of fins or ribs **63** on the outer wall of the chamber for facilitating the mounting and removal of the cartridge from the mounting head. The fins **63** also make the cartridge cooler to touch after hot water is passed through. A piece of porous materials such as bonded or unbonded fibers, foam or cloth **62** is placed above the flavor-containing materials or particle materials to restrict the movement of the materials in the chamber **11**.

[**0065**] **FIG. 5** shows a modified cartridge **10** and a modified mounting head **33** for making beverages. A valve **43** comprising an elastic film **93** and one or more expandable openings **89** is attached to the bottom part **26** of the inner

wall **25** in cartridge inlet **29** for preventing the materials **12** and liquid in the chamber **11** from streaming out of the cartridge inlet if the user removes the cartridge when it is pressurized. In this sense the elastic film functions as a safety valve for the cartridge. The elastic film can be a thermoplastic elastomer film such as polyurethane, polyolefin or polyester elastomer film that can be heat-staked to the cartridge inlet or a rubber film. The opening **89** can be a cut that is normally closed or be small enough to have capillary force to prevent residual liquid from dripping out of the used cartridge during disposal. Such opening can also reduce flavor or aroma loss during the storage of the cartridge. The opening **89** is expanded when force is applied to the elastic film **93**, either by the extension tube when the cartridge is mounted or by the pressurized liquid from the mounting head. It is appreciated a valve **43** can be located in or above the cartridge outlet **16** to stop the dripping of the residual fluid in the cartridge. The cartridge further comprises a plurality of protrusions **48** near the lower portion of chamber **11** to form collector **17** to lead the beverage from filter **15** to cartridge outlet **16**. A freshness promoter **59** is placed in the chamber **11** to prolong the freshness of the flavor-containing materials **12**. Barrier film **19** is attached to the cartridge outlet to seal the opening **18**. The barrier film can be adapted to be removable by the user or breakable by the beverage fluid from filter **15**.

[**0066**] A safety valve **76** is positioned at the extension tube **42** to close a channel **80** which communicates with channel **34** when the cartridge is not mounted to the mounting head or when the user does not mount the cartridge correctly. The safety valve comprises a valve chamber **61** in the extension tube, a seal member such as an elastomer ball **69**, an activator **60** maintained in the valve chamber by a keeper **88** and a spring **68**. When the cartridge **10** is being mounted, the inner wall **25** contacts a sloped end **84** of activator **60** and pushes the activator, thus the ball **69**, towards the left side of the valve chamber against the spring to open the channel **80** to channel **34**. When the cartridge is removed, the spring **68** pushes the ball **69** toward the right and closes the channel **80**. The channel **34** is connected to a water chamber **72** for containing hot water to make beverages with cartridge **10**. The water chamber comprises a heater **73** for heating water and an inlet **70** connected to a pressure source such as the in-house or in-building plumb system, compressed air or pressurized steam for forcing the water through the mounting head **33** and the cartridge **10**. To allow fast preparation of a large quantity of beverage without being significantly limited by the heating rate of the heater **73**, the water chamber may have a capacity to store a large quantity of water (e.g. 10 cups or 100 cups) at a predetermined or optimized temperature for making the beverage. Moreover, at faster speed the contact time between the hot water and the materials **12** is shorter, which may increase the beverage quality if the materials **12** is coffee grounds since shorter contact time reduces the amount of bitter chemicals in the extraction.

[**0067**] **FIG. 5***b* shows a modified cartridge **10** wherein the chamber **11** is formed by a lower chamber **11***a* and an upper chamber **11***b*, which are attached to each other at their flanges **49***a* and **49***b*, and the filter **15** is pushed into the lower chamber and sealed at its peripheral to flange **49***a* to receive a supply of flavor-containing materials **12***a*. An elastomer septum **129** is tightly fitted into the cylindrical opening **27** of the cartridge inlet **29** and secured therein by lower and upper enlarged parts **122***a* and **122***b*. It is appreciated that the elastomer septum can be secured to the opening **27** by other means such as heat-sealing or mechanical crimping. A normally closed opening may be formed in the elastomer septum to facilitate the insertion of the needle **123**. Another filter **15***a* for the flavor-containing or particle materials **12***b* is sealed at its peripheral to the flange **49***b* of the upper chamber or the flange **49***a* of the lower chamber. The filter **15** is not completely conformed to the lower chamber **11***a* so that a space, i.e. Collect or **17**, is formed between the filter **15** and the bottom of the lower chamber. The barrier film **19**, which is breakable by the fluid from the filter **15**, is attached to the bottom **20** of the lower chamber to seal the cartridge outlet, dividing divide the collector **17** into an upper collector **17***a* and a lower collector **17***b*. The septum **129** is soft enough to allow a needle **123** to penetrate. The needle has a base **128** connected to the mounting head **33**, a channel **124** connected to channel **34** and a plurality of openings **127** at its lower end to distribute water over the flavor-containing or particle materials **12***b*.

[**0068**] **FIG. 5***c* shows a modified cartridge **12** wherein the cartridge inlet **29** comprises a cylindrical body **22** having a cylindrical opening **27**, a thread **77** on the outer surface of the cylindrical body for engaging with the thread **82** on the mounting head **33** and a seal section **81** for forming a hermetic seal with a gasket or o-ring **79** attached to the cylindrical chamber **37** of the mounting head. Safety valve **76** is located in the channel **34** for closing the channel when the cartridge is removed from the mounting head **33**. The safety valve comprises a narrow section **86** of the channel, a valve body **87** having an enlarged upper end for closing the narrow section **86** and a lower end attached to a distributor **83** having a plurality of holes **85** for distributing water over the flavor-containing materials **12** in the chamber **11**. When the cartridge is mounted, the cartridge inlet pushes the distributor **83** and the valve body **87** upwards, thus opening the channel **34** or the safety valve. The materials **12** is enclosed in filter **15***a* and the resulting pouch is elongated and inserted into the chamber **11** through the opening **27**.

[**0069**] **FIG. 5***d* shows a modified cartridge **12** wherein the flange **24** of the cartridge inlet has a sloped surface **49** for facilitating the insertion into the chamber **37** of the mounting head **33** and forming a hermetic seal with the o-ring **49** mounted to the chamber **37**. A latch or piston **35** in a latch chamber **95** formed at the peripheral wall of the chamber **37** is activated by a spring **96** to reach the underside of the flange **24** and locking the cartridge. The latch **35** and spring **96** are maintained in the latch chamber by a keeper **98**. The latch **35** is extended outside the latch chamber by an extension **97**. The extension **97** is connected to a handle **99**, which is pivoted at a protrusion **127**, so that the pressing of handle **99** causes the latch **35** to retract from the underside of the flange **24** and release the cartridge. A spring **101** in cylindrical slot **100** may be positioned above the distributor **83** downward after the cartridge is removed. The spring can also help ejecting the cartridge when the handle **99** is pressed. The cartridge has an expandable opening **18***a* formed on an elastic film or sheet **91**. The expandable opening is adapted to expand in size when the pressure above increases, thus making it difficult to be clogged by solids. The elastic film or sheet **91** is secured above the opening **92** of the cartridge outlet **16** by a rigid member **94** having an opening **90**. The elastic film or sheet **91** can also secured by heat-staking it to the peripheral wall around the

opening **92**. The expandable opening **18***a* can be in a closed position when the pressure across the film **91** is zero or sufficiently small so that the loss of aroma or freshness through the opening **18***a* is minimized or prevented. It is appreciated that other types of expandable openings such as an opening having on or within it a member movable by the pressure above the opening can also be used here.

[**0070**] **FIG. 6** shows an alternative cartridge **10***a* wherein the cartridge comprises a chamber **11***a* having a flange **49***a* adapted to rest on a holder **105** for forming a hermetic seal between the flange **49***a* and the brew head of the brew head of existing espresso machines. Unlike the filter holders for existing espresso machines, holder **105** has a generally open bottom **104** for receiving the cartridge outlet **16** and allowing the beverage from the opening **18** of the cartridge outlet to discharge directly into a receptacle such as a cup or carafe **40**, thus eliminating the need to clean the holder after brewing. The opening **18** can be an orifice or restrictive opening to produce a high-speed fluid jet to cause the formation of a foamy head or crema in the cup or carafe when it is received therein. As in **FIG. 5***b*, the peripheral of filter **15**A is attached to the flange and is partially conformed to the shape of the chamber **11***a* to receive flavor-containing materials **12** and the breakable barrier film **19** is attached to the cartridge outlet. The cover **28**, which can be a water-permeable or a barrier film (or sheet), is attached to the flange **49***a* to keep the flavor-containing materials in the filter **15**.

[**0071**] **FIG. 7** shows an alternative cartridge **10** and mounting head **33**. The cartridge is similar to the cartridge of **FIG. 5***b* except the cartridge inlet **29** here comprises a recessed surface **111**, a inlet chamber **112** and an opening **27** sealed by a breakable barrier film **28**. The inlet chamber **112** is adapted to receive a tip **115** of the mounting head **33** so that the recessed surface **111** forms a hermetic seal with a gasket or o-ring **110** attached on the tip. The hermetic seal is maintained by pressing the tip **115** against the recessed surface **111**, or vice versa, with a spring force, hydraulic force or other forces acted on the cartridge or tip **115**. The inlet chamber **112** and tip **115** are preferably round or partially spherical to facilitate the connection of the cartridge and the mounting head. The upper and lower chambers are preferably produced from sheet material by mechanical forming, thermoforming or a combination of both for lower manufacturing cost. **FIG. 7***a* shows a modified cartridge of **FIG. 7** wherein a plurality of protrusions **48** are formed on the interior surface of lower chamber **11***a* for forming collector **17** to collect the fluid from the filter **15** and lead the fluid to the opening **18** of the cartridge outlet **16**. **FIG. 7***b* shows a modified cartridge **10** and mounting head **33** of **FIG. 7** wherein the cartridge inlet comprises a protruded chamber **119**, preferably round or partially spherical, a protruded surface **119** and opening **27**, and the mounting head comprising recessed chamber **116** for receiving the protruded chamber **119** and gasket or o-ring **110** to form a hermetic seal with the protruded surface **119**. A supply of a first flavor-containing materials **12***a* is placed directly on a separator or filter **15** and a supply of a first flavor-containing materials **12***b* is enclosed in filter **15***a*. In case that the materials **12***a* is milk granules or powder and materials **12***b* is coffee grounds for making milk-containing coffee drinks, the filter or separator **15** can have large openings to prevent the clogging of this filter by the gel or gel-like materials in the milk. It is found that the openings of the filter or separator **15** can be as large as about 3 mm without significantly impacting the brewing process or the quality of the beverage received in receptacle such as a cup or carafe **40**. The barrier film helps to keep the milk granules or powder in the chamber **11***a* when the filter **15** has openings larger than the size of the milk granules or powder during the storage and handling of the cartridge **10**.

[**0072**] Clearly, the modifications for the cartridges and mounting head can be combined into or removed from any of the exemplar embodiments of the invention. The scope of the invention is obviously not restricted to the embodiments described by way of examples and depicted in the drawings, there being numerous changes, modifications, additions, and applications thereof imaginable within the purview of the claims.

What is claimed is:

1. A cartridge for use with a mounting head for making fluid comestibles such as coffee, espresso, cappuccino, latte, tea, filtered water, hot chocolate, milk, soup or herb comprising:

a cartridge inlet for forming a hermetic seal with the mounting head and introducing liquid under pressure from the mounting head into said cartridge;

a chamber connected to said cartridge inlet for containing suitable flavor-containing or particle materials and for allowing the interaction of the flavor-containing or particle materials with the liquid from said cartridge inlet under pressure therein to produce the fluid comestibles;

a cartridge outlet connected to said chamber for discharging the fluid comestibles produced in said chamber; and

a handle allowing a user to hold said handle to attach and secure said cartridge inlet to the mounting head, said handle comprising at least part of the wall of said chamber, said at least part of the wall being sufficiently rigid and adapted for the user to hold without causing substantial deformation or damage.

2. A cartridge as defined in claim 1 wherein said cartridge inlet, said chamber and said cartridge outlet are formed as one single or integral body.

3. A cartridge as defined in claim 1 wherein said cartridge inlet has a cross-section area significantly smaller than said chamber to reduce the force exerted by the pressure in said chamber to said cartridge inlet, thereby lowering the risk of breaking said hermetic seal.

4. A cartridge as defined in claim 1 wherein said cartridge outlet comprises a restrictive opening such as an orifice for forming a high-speed fluid jet or stream, said restrictive opening being arranged to allow protruded chamber **119** and gasket or o-ring **110** to form a hermetic seal with the protruded surface **119**. A supply of a first flavor-containing materials **12***a* is placed directly on a separator or filter **15** and a supply of a first flavor-containing materials **12***b* is enclosed in filter **15***a*. In case that the materials **12***a* is milk granules or powder and materials **12***b* is coffee grounds for making milk-containing coffee drinks, the filter or separator **15** can have large openings to prevent the clogging of this filter by the gel or gel-like materials in the milk. It is found that the openings of the filter or separator **15** can be as large as about 3 mm without significantly impacting the brewing process or the quality of the beverage received in receptacle such as a

cup or carafe **40**. The barrier film helps to keep the milk granules or powder in the chamber **11***a* when the filter **15** has openings larger than the size of the milk granules or powder during the storage and handling of the cartridge **10**.

Clearly, the modifications for the cartridges and mounting head can be combined into or removed from any of the exemplar embodiments of the invention. The scope of the invention is obviously not restricted to the embodiments described by way of examples and depicted in the drawings, there being numerous changes, modifications, additions, and applications thereof imaginable within the purview of the claims. the high-speed fluid stream or jet to interact with air when or before the fluid is received in a receptacle such as a cup or carafe, thereby generating a foamy head or crema for the fluid comestible.

5. A cartridge as defined in claim 1 wherein said cartridge outlet comprises a restrictive opening such as an orifice for producing a fluid jet or stream of sufficiently high speed and an arrangement for the fluid jet or stream to inject into a receptacle such as a cup or carafe to produce a foamy head or crema therein.

6. A method for using the cartridge as defined in claim 1 to make fluid comestibles comprising a step of holding said handle of said cartridge to secure said cartridge inlet to the mounting head and a step of causing the liquid to be delivered under pressure through the flavor-containing or particle materials in said chamber and through said cartridge outlet and directly into a receptacle such as a cup or carafe for consumption, thereby dramatically simplifying the preparation of the fluid comestibles and relieving the user from the tedious cleaning work after preparing the fluid comestibles.

7. A method for using the cartridge as defined in claim 1 to make fluid comestibles as defined in claim 6 wherein the pressure used to deliver the liquid is from an in-house or in-building plumb system.

8. A method for using the cartridge as defined in claim 1 to make fluid comestibles as defined in claim 6 wherein the pressure used to deliver the liquid is generated by a pressurization means such as a pump, pressurized steam or compressed air.

9. A method for using the cartridge as defined in claim 1 to make fluid comestibles as defined in claim 6 wherein the mounting head is hand-held.

10. A method for using the cartridge as defined in claim 1 to make fluid comestibles as defined in claim 6 wherein the mounting head is fixed in position.

11. A cartridge as defined in claim 1 wherein said chamber adapts a generally spherical or cylindrical shape to improve the amount of pressure said cartridge can withstand.

12. A cartridge as defined in claim 1 further comprising a plurality of protrusions such as vertical ridges, ribs or spherical dots on the outer surface of said chamber to facilitate the connection and removal of said cartridge to and from the mounting head or to make the user feel cooler when holding said handle.

13. A cartridge as defined in claim 1 wherein said cartridge outlet is dimensioned to fit into the cartridge inlet, or vice versa, of another said cartridge, thereby allowing a plurality of cartridges to be connected to each other to facilitate the storage or packaging of the cartridges.

14. A cartridge as defined in claim 1 wherein said cartridge inlet comprises a first lock element for removably engaging with a second lock element on the mounting head to prevent said cartridge inlet from being separated from the mounting head by the liquid pressure in said chamber.

15. A cartridge as defined in claim 14 wherein said cartridge inlet further comprises a cylindrical opening dimensioned to receive a tubular extension on the mounting head to form water-tight seal between said cylindrical opening and the tubular extension when said first and second lock elements are engaged.

16. A cartridge as defined in claim 14 wherein said first lock element comprises a flange such as a circular flange having at least one cut or a non-circular flange for engaging with the second lock element which may comprise one or more protrusions such as spiral- or helix-shaped ledges or ridges on the inner surface of a substantially cylindrical chamber, said flange and protrusion being so configured that rotation of said cartridge inlet causes it to move into or out of the substantially cylindrical chamber.

17. A cartridge as defined in claim 16 wherein said cartridge inlet or flange comprises a safety element adapted to engage with a counterpart on the mounting head for preventing the removal of said cartridge from the mounting head when the pressure in said chamber is high.

18. A cartridge as defined in claim 1 further comprising a filter for the flavor-containing or particle materials in said chamber and a barrier film breakable by the fluid coming from said filter for impeding the transport of molecules such as aroma, moisture or oxygen between said chamber and atmosphere.

19. A cartridge as defined in claim 1 wherein said cartridge inlet, chamber, cartridge outlet and said filter are made from the same material such as polyester, polypropylene or nylon to facilitate the recycle or reuse thereby reducing the burden to environment.

20. A cartridge as defined in claim 1 wherein at least said chamber is made from degradable materials such as poly-(lactic acid) thereby reducing the burden to environment.

21. A cartridge as defined in claim 1 further comprising an amount of flavor-containing or particle materials sealed in a water-permeable filter bag or pouch in said chamber.

22. A cartridge as defined in claim 1 further comprising a filter for the flavor-containing or particle materials and a plurality of protrusions or grooves on the inner wall of said chamber to lead the fluid comestibles from said filter to said cartridge outlet.

23. A cartridge as defined in claim 1 further comprising barrier film for sealing said cartridge outlet, said barrier film being adapted to be removable by a user or breakable by the fluid comestibles.

24. A cartridge as defined in claim 1 further comprising a barrier film for sealing said cartridge inlet, said barrier film being adapted to be removable by a user or breakable by force.

25. A cartridge as defined in claim 1 wherein said cartridge inlet comprises a substantially cylindrical opening having a narrower section near its lower part for facilitating the attachment of a barrier film, which is adapted to be breakable by force or the liquid, to the wall of said cylindrical opening around said narrower section to cover said cartridge inlet.

26. A cartridge as defined in claim 1 further comprising a removable cap or plug for said cartridge inlet.

27. A cartridge as defined in claim 1 further comprising a valve located in said cartridge inlet for preventing or imped-

ing the liquid or flavor-containing materials in said chamber from gushing out of said cartridge inlet in case that the user removes the cartridge from the mounting head when the pressure in the cartridge is high.

28. A cartridge as defined in claim 1 further comprising a piece of porous material such as bonded or unbonded fibers, foam or cloth for restricting the flavor-containing or particle materials from moving out of said chamber.

29. A cartridge as defined in claim 1 further comprising a valve in said cartridge inlet or cartridge outlet to stop the dripping of the residual fluid in the cartridge during the removal of the cartridge, said valve comprising an opening that is closed or sufficiently small when the cartridge is removed from the mounting head or when the pressure upstream is sufficiently small.

30. A cartridge as defined in claim 1 further comprising a elastomer septum secured in said cartridge inlet, said elastomer septum being adapted to allow a needle having a fluid channel to penetrate and deliver the liquid under pressure to the flavor-containing materials in said chamber.

31. A cartridge as defined in claim 1 wherein said cartridge further comprising a predetermined amount of roasted ground coffee.

32. A cartridge as defend in claim 31 further comprising a predetermined amount of reactive materials such as lime or calcium oxide for prolonging the freshness of said ground coffee and a porous hydrophobic film for preventing said ground coffee and the liquid from contacting said reactive materials.

33. A cartridge as defend in claim 1 wherein said cartridge inlet, chamber and cartridge outlet are blow-molded as one single body.

34. A cartridge for making fluid comestible such as coffee, espresso, cappuccino, latte, tea, hot chocolate, milk, soup or herb comprising:

a cartridge inlet for the introduction of pressurized liquid into said cartridge;

a first flavor-containing materials;

a filter permeable to the liquid for preventing said first flavor-containing materials from passing through;

a second flavor-containing materials separated from said first flavor-containing materials by at least said filter, thereby preventing intermixing and potential interactions between said first and second flavor-containing materials;

a chamber for containing said first and second flavor-containing materials and for allowing the interaction of the pressurized liquid with said first and second flavor-containing materials therein;

a cartridge outlet for discharging the fluid comestible produced from said first and second flavor-containing materials; and

a separator located in or above said cartridge outlet but below said first and second flavor-containing materials in said chamber, said separator having numerous small openings to allow said fluid comestibles to pass through.

35. A cartridge as defined in claim 34 wherein said second flavor-containing materials is water-soluble materials such as granular milk, cocoa, cream or sugar and said first flavor-containing material is coffee grounds, tea leaves or herb materials.

36. A cartridge as defined in claim 35 wherein said first flavor-containing materials is substantially enclosed by said filter and said second flavor-containing material is contained in the space between said first flavor-containing materials and said separator.

37. A cartridge as defined in claim 34 further comprising a first barrier film for sealing said cartridge inlet and a second barrier film below said separator for sealing said cartridge outlet, said first and second barrier films being adapted to be breakable by fluid pressure or removable by a user.

38. A cartridge as defined in claim 34 further comprising a second filter for said second flavor-containing materials in said chamber.

39. A cartridge as defined in claim 38 wherein said first flavor-containing materials is enclosed by said filter and said second flavor-containing material is enclosed by said second filter.

40. A cartridge as defined in claim 34 wherein said cartridge outlet comprises a restrictive opening such as an orifice adapted to produce a fluid jet or stream at sufficiently high-speed so that a foamy head or crema is generated when the fluid jet or stream is received in a receptacle such as a cup or carafe.

41. A method for the preparation of fluid comestibles from a cartridge comprising a cartridge inlet, a cartridge outlet, a handle and one or more flavor-containing or particle materials such as coffee grounds, tea, chocolate, cocoa, filtration materials, soup powder or granular milk in a chamber, which method comprising:

aligning said cartridge inlet with a mounting head in communication with a pressurized water source with the aid of said handle;

forming a watertight seal between said cartridge inlet and said mounting head with the aid of said handle;

locking said cartridge inlet to said mounting head to maintain said water-tight seal with the aid of said handle; and

introducing the pressurized water from said mounting head into said chamber wherein the pressurized water interacts with said flavor-containing materials or particle materials, thereby forming the fluid comestibles.

42. A method as defined in claim 41 wherein said aligning step comprises causing an extension tube, which has a lower part visible to the user and readily receivable in said cartridge inlet, on said mounting head to enter said cartridge inlet, thereby guiding said cartridge inlet into said mounting head.

43. A method as defined in claim 41 wherein said forming and locking steps comprise holding said handle to rotate said cartridge inlet relative to said mounting head until such rotation becomes tight enough.

44. A method as defined in claim 41 wherein said forming and locking steps comprise causing a needle having a fluid channel secured to said mounting head to penetrate a elastomer septum secured to said cartridge inlet.

45. A method as defined in claim 41 wherein said locking step comprises pushing a latch or pin by a spring or other

mechanism in the mounting head toward said cartridge inlet to engage with a fixture such as a notch or flange on said cartridge inlet.

46. A method as defined in claim 41 further comprising discharging the fluid comestibles from said cartridge outlet directly into a receptacle such as a cup or carafe without contacting any other items, thereby relieving the user from tedious cleaning work after preparing the fluid comestibles.

47. A cartridge for making fluid comestibles such as coffee, espresso, cappuccino, latte, tea, hot chocolate or milk comprising:

a cartridge inlet for the introduction of pressurized liquid into said cartridge;

a chamber for containing one or more flavor-containing materials such as coffee grounds, tea, cocoa, chocolate or granular milk for the fluid comestibles and for allowing the interaction of the pressurized liquid with said flavor-containing materials therein;

a collector for collecting the fluid comestibles produced from the flavor-containing materials;

a restrictive opening such as an orifice for converting the fluid comestibles in said collector into a high-speed fluid stream or jet;

a filter located upstream of restrictive opening for protecting said restrictive opening from being clogged by the flavor-containing materials or foreign solid or gel materials; and

an arrangement for the high-speed fluid stream or jet to interact with air when or before the fluid comestibles is received in a receptacle such as a cup or carafe, thereby generating foamy head or crema for the fluid comestibles.

48. A cartridge as defined in claim 47 further comprising at least one additional restrictive opening, said restrictive openings being so constructed that the resulting high-speed fluid streams or jets meet or collide in the space, thereby generating foamy head or crema for the fluid comestibles.

49. A cartridge as defined in claim 47 wherein said arrangement allows the high-speed fluid stream or jet from said restrictive opening to collide or interact with a solid surface such as the inner wall of said cartridge outlet, thereby producing foamy head or crema for the fluid comestible.

50. A cartridge as defined in claim 47 further comprising a outlet chamber below said restrictive opening for receiving the high-speed fluid stream or jet and causing the mixing of air with fluid in said chamber, thereby producing fine air bubbles, said outlet chamber having at least one opening for discharging the fluid and fine air bubbles.

51. A cartridge as defined in claim 47 wherein said arrangement allows the high-speed fluid stream or jet from said orifice or restricted opening to inject directly into the receptacle such as a cup or carafe, the high-speed fluid stream or jet carrying the surrounding air into the fluid comestibles in the receptacle such as a cup or carafe thereby generating foamy head or crema for the fluid comestibles.

52. A cartridge as defined in claim 47 wherein said restrictive opening is normally very small or closed and is adapted to increase in size when the pressure above increases.

53. A coffee cartridge or package for the preparation of fluid comestibles such as coffee, espresso, cappuccino, mocha or latte comprising:

a sealed chamber or compartment formed from substantially air- and water-impermeable materials for containing an amount of roasted coffee beans or grounds;

a freshness promoter located in said sealed compartment for prolonging the freshness of the roasted coffee beans or grounds therein, said freshness promoter comprising a supply of reactive materials that can react with the carbon dioxide released by the roasted coffee beans or grounds in said sealed compartment, thereby preventing over pressurization of said package as a result of the release of carbon dioxide, and react with water vapor in said sealed compartment, thereby impeding the deterioration of the roasted coffee beans or grounds; and

a separator for preventing said freshness promoter from contacting or contaminating the roasted coffee beans or grounds, said separator being permeable to carbon dioxide and water vapor to allow them to pass through readily and react with said freshness promoter.

54. A package as defined in claim 53 wherein said supply of reactive materials comprises lime or calcium oxide or other oxide of alkali metals and alkaline earth metals.

55. A package as defined in claim 53 wherein said separator is formed from a porous film, preferably a hydrophobic porous film.

56. A package as defined in claim 53 further comprising a supply of roasted coffee grounds, an inlet for introducing pressurized aqueous media into said sealed compartment to interact with said roasted coffee grounds to form fluid comestibles, and an outlet for the fluid comestibles.

57. A package as defined in claim 53 further comprising a supply of roasted coffee beans, said coffee beans being sealed in said compartment shortly after roasting to preserve the aroma of the freshly roasted beans.

58. A cartridge connector for use in preparing fluid comestibles from a cartridge comprising one or more flavor-containing or particle materials such as coffee grounds, tea, chocolate, cocoa, granular milk, herb, filtration materials or soup powder in a chamber and a cartridge inlet having a substantially cylindrical body, a through-opening in the substantially cylindrical body connected to the chamber and a lock element, which comprising:

a substantially cylindrical chamber for receiving the substantially cylindrical body of the cartridge inlet;

a channel for providing communication between a source of pressurized liquid and the through-opening in the substantially cylindrical body after the substantially cylindrical body is received in said substantially cylindrical chamber;

a second lock element for removably engaging with the lock element on the cartridge inlet to prevent the substantially cylindrical body of the cartridge inlet from being pushed out of said substantially cylindrical chamber by the pressure of the pressurized liquid, whereby, in use, the substantially cylindrical body of the cartridge inlet is received in said substantially cylindrical chamber to form a hermetic seal, which is maintained by said second lock element and the lock element on the cartridge inlet, and the pressurized

liquid is delivered through said channel and the through-opening to the flavor-containing or particle materials in the cartridge wherein the pressurized liquid and materials interacts to form the fluid comestibles.

59. A cartridge connector as defined in claim 58 further comprising a valve for controlling the liquid flow in said channel, said valve being adapted to open said channel when the substantially cylindrical body of the cartridge inlet is received in said substantially cylindrical chamber and to close said channel when the substantially cylindrical body is removed from said substantially cylindrical chamber.

60. A cartridge connector as defined in claim 58 further comprising a tubular extension connected to said channel, said tubular extension being adapted to fit into the through-opening of the cartridge inlet to form the hermetic seal when the lock element of the cartridge inlet is engaged with said second lock element.

61. A cartridge connector as defined in claim 58 further comprising a cylindrical member extended substantially out of said substantially cylindrical chamber to function as guide for the user to insert substantially cylindrical body of the cartridge inlet into said substantially cylindrical chamber.

62. A cartridge connector as defined in claim 58 wherein said second lock element comprises a raised section such as a spiral- or helix-shaped ledge or ridge on the inner surface of said substantially cylindrical chamber adapted to engage with the lock element of the cartridge inlet such as a non-circular flange or a circular flange having at least one cut so that the rotation of the cartridge inlet in said substantially cylindrical chamber causes said cartridge inlet to move into or out of said cylindrical chamber.

63. A cartridge connector as defined in claim 58 further comprising a safety element for impeding or preventing the removal of the cartridge from said cartridge connector when the pressure in said cartridge is high.

64. A cartridge connector as defined in claim 58 wherein said second lock element comprises a thread on the inner surface of said substantially cylindrical body for engaging the lock element, i.e. a thread on the outer surface of the substantially cylindrical body.

65. A cartridge connector as defined in claim 58 wherein said second lock element comprises a lock chamber in the wall of said substantially cylindrical chamber, a latch or pin receivable in said lock chamber for engaging with the first lock element comprising a flange for the substantially cylindrical body, and a spring for activating said latch or pin to engage with the flange.

66. A cartridge for use with a holder having an open upper end and a large opening at its bottom in an apparatus such as an espresso machine or coffee maker to make beverage or drink such as coffee, espresso, cappuccino, latte, tea, filtered water, hot chocolate, milk, soup or herb, which comprising:

a chamber adapted to be received in the holder, said chamber having a generally open upper end and a generally closed lower end;

a flange formed at said generally open upper end of said chamber, said flange being adapted to be supported by the holder to form a seal with the brew head of the apparatus;

a filter sealed at its peripheral to said flange and conformed partially to said chamber to form a cavity above said filter and a fluid collection space between said filter and said generally closed lower end of said chamber

suitable flavor-containing or particle materials such as coffee grounds, tea, chocolate, cocoa, solid milk, herb or filtration materials in said cavity formed by said filter;

a cover sealed to said flange for maintaining said flavor-containing or particle materials in said cavity; and

a cartridge outlet formed at said generally closed lower end of said chamber for discharging the drink, said cartridge outlet being adapted to fit in or directly above the large opening at the bottom of the holder so that the beverage is discharged directly into a receptacle such as a cup or carafe without contacting or contaminating the holder, thereby relieving the user from the tedious work of cleaning the apparatus after preparing beverages.

67. A cartridge connector as defined in claim 66 further comprising a barrier film for sealing the cartridge outlet and preventing the loss of aroma or freshness of the flavor-containing materials, said barrier film being breakable by liquid pressure.

68. A beverage cartridge for use with a mounting head comprising:

a flavor-containing or particle materials such as coffee grounds, tea, chocolate, cocoa, solid milk, herb or filtration materials;

a chamber for containing said flavor-containing or particle materials;

a cartridge outlet for the beverage; and

a cartridge inlet having an opening and a elastomer septum secured to or in said opening to seal said cartridge inlet, said elastomer septum being adapted to be penetrated by a rigid, elongated thin member such as a needle on the mounting head for introducing pressurized liquid from the mounting head to said flavor-containing or particle materials in said chamber wherein the pressurized liquid interacts with said flavor-containing or particle materials to produce the drink and to apply sufficient force to said rigid elongated thin member such as a needle to prevent said thin member such as a needle from being pushed out by the pressure in said chamber.

69. A cartridge connector as defined in claim 68 wherein said septum comprises a normally closed opening for facilitating the penetration of the thin member such as a needle through said septum.

70. A beverage cartridge for use with a mounting head comprising:

suitable flavor-containing or particle materials such as coffee grounds, tea, chocolate, cocoa, solid milk, herb or filtration materials;

a rigid chamber for a user to hold to mount the cartridge to the mounting head without substantially deforming said rigid chamber and for containing said flavor-containing or particle materials;

a cartridge outlet for the beverage; and

a cartridge inlet for the introduction of pressurized liquid from the mounting head to said flavor-containing or

particle materials in said rigid chamber wherein the pressurized liquid interacts with said flavor-containing or particle materials to produce the drink, said cartridge inlet is adapted to have a cross-section area significantly smaller than said chamber to reduce the force exerted by the pressurized liquid to said cartridge inlet, thereby lowering the risk of personal injury caused by the dislodging of said cartridge from the mounting head.

71. A cartridge for use with a mounting head to make beverage such as coffee, espresso, cappuccino, latte, tea, filtered water, hot chocolate, milk, soup or herb comprising:

suitable flavor-containing or particle materials such as coffee grounds, tea, granular milk, filtration materials, coca, soup powder or herb for the production of the beverage;

a filter for said flavor-containing or particle materials;

a lower body comprising an lower chamber having a generally closed end and a generally open end, a first flange formed at said generally open end, and a cartridge outlet formed at the generally closed end for discharging the beverage; and

an upper body comprising an upper chamber having a generally closed end and a generally open end, a second flange formed at said generally open end, and a cartridge inlet formed at the generally closed end, said cartridge inlet having a sealing surface for forming a hermetic seal with the mounting head and a liquid opening located near the center part of said sealing surface for introducing the pressurized liquid from the mounting head into said upper chamber, said upper and lower bodies being sealed together at said first and second flanges to form a chamber to contain said flavor-containing or particle materials, said liquid opening having a sufficiently small size to lower the force exerted by the pressurized liquid to the hermetic seal thereby improving the hermetic seal, whereby, in use, said sealing surface of said cartridge inlet is brought against the mounting head to form the hermetic seal around said small liquid opening thereby allowing the pressurized liquid to be introduced into said chamber wherein it interacts with the flavor-containing or particle materials to form the beverage.

72. A cartridge as defined in claim 67 wherein said first chamber and said second chamber are formed from sheet material such as polyester, polypropylene or aluminum sheet by mechanical forming, thermoforming or a combination of mechanical forming and thermoforming.

73. A cartridge as defined in claim 67 further comprising a second flavor-containing materials and a second filter for said second materials, at least one said first and second flavor-containing materials being a water-soluble materials, the filter for said water-soluble materials comprising larger openings than the other filter.

74. A cartridge as defined in claim 67 wherein the peripheral of said filter is adapted to be heat-sealed to said upper or lower body.

75. A cartridge as defined in claim 67 wherein said cartridge inlet is recessed into said upper chamber to form a miniature chamber for receiving the mounting head and to form said sealing surface.

76. A cartridge as defined in claim 67 wherein said cartridge inlet is protruded above said upper chamber to form a miniature chamber receivable in the mounting head and to form said sealing surface.

77. A cartridge as defined in claim 67 wherein said cartridge outlet comprises an orifice, said orifice being adapted to form a fluid jet or stream at sufficiently high-speed that a foam head or crema is generated when the fluid jet or stream is received in a receptacle such as a cup or carafe.

* * * * *