US006142063A

United States Patent [19]

Beaulieu et al.

[11] **Patent Number: 6,142,063**

[45] **Date of Patent: *Nov. 7, 2000**

[54] **AUTOMATED BEVERAGE BREWING SYSTEM**

[75] Inventors: **Roderick H. Beaulieu**, Cumberland, R.I.; **James W. Wuertele**, North Billerica, Mass.; **Richard P. Sweeney**, Winchester, Mass.; **John E. Sylvan**, Milton, Mass.; **Kenneth A. Focht**, Needham, Mass.; **Jennie Kwo**, Cambridge, Mass.

[73] Assignee: **Keurig, Inc.**, Wakefield, Mass.

[*] Notice: This patent issued on a continued prosecution application filed under 37 CFR 1.53(d), and is subject to the twenty year patent term provisions of 35 U.S.C. 154(a)(2).

[21] Appl. No.: **09/232,994**

[22] Filed: **Jan. 19, 1999**

[51] **Int. Cl.**[7] **A47J 31/32**

[52] **U.S. Cl.** ..... **99/283**; 99/295; 99/302 R

[58] **Field of Search** ..... 99/295, 302 R, 99/305, 307, 283, 280; 426/433

[56] **References Cited**

U.S. PATENT DOCUMENTS

4,143,589	3/1979	Weber	99/283 X
4,815,366	3/1989	Hauslein	99/305 X
4,922,809	5/1990	Fuhner	99/305 X

OTHER PUBLICATIONS

Stan McLean, VKI Technologies; Mechanical Desktop application: Zuma Brewer; World Wide Web, www.autodesk.com/prodsol/mech/spotlite/zuma3.htm. Jan. 12, 1998.

Primary Examiner—Reginald L. Alexander

Attorney, Agent, or Firm—Samuels, Gauthier & Stevens, LLP

[57] **ABSTRACT**

An automated beverage brewing system includes a liquid storage tank and a metering chamber. The metering chamber is at least partially submerged beneath a standing level of liquid in the storage tank. The chamber includes a sealable liquid inlet port communicating with the interior of the storage tank beneath the standing level of liquid. The chamber also includes a liquid outlet port and an aperture that receives compressed air, wherein the compressed air forces a predetermined amount of liquid from the liquid output port of the chamber for use in preparing a brewed beverage. A pump provides the compressed air and a controller monitors a pressure signal value indicative of the air pressure in the metering chamber. The controller commands the pump on to commence flow of the predetermined amount of liquid from the metering chamber. The controller then commands the pump off several seconds after detecting a drop in air pressure within the chamber, indicating that the predetermined amount of liquid has been delivered to the brewing chamber. The chamber is then vented to ambient pressure, which opens the sealable liquid inlet port and refills the chamber.

8 Claims, 7 Drawing Sheets

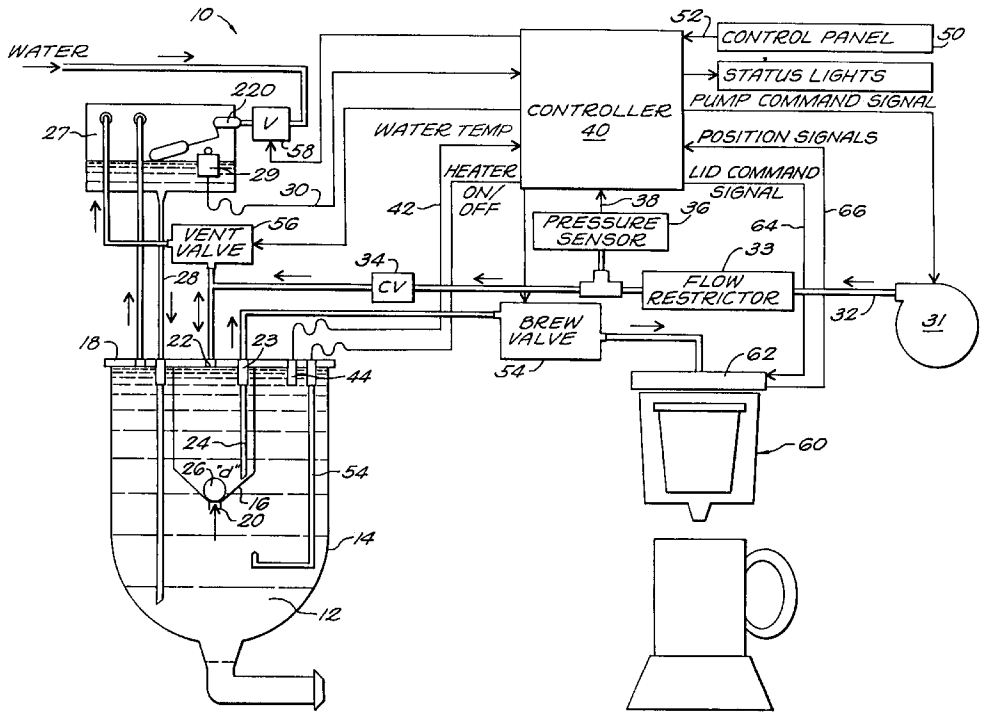

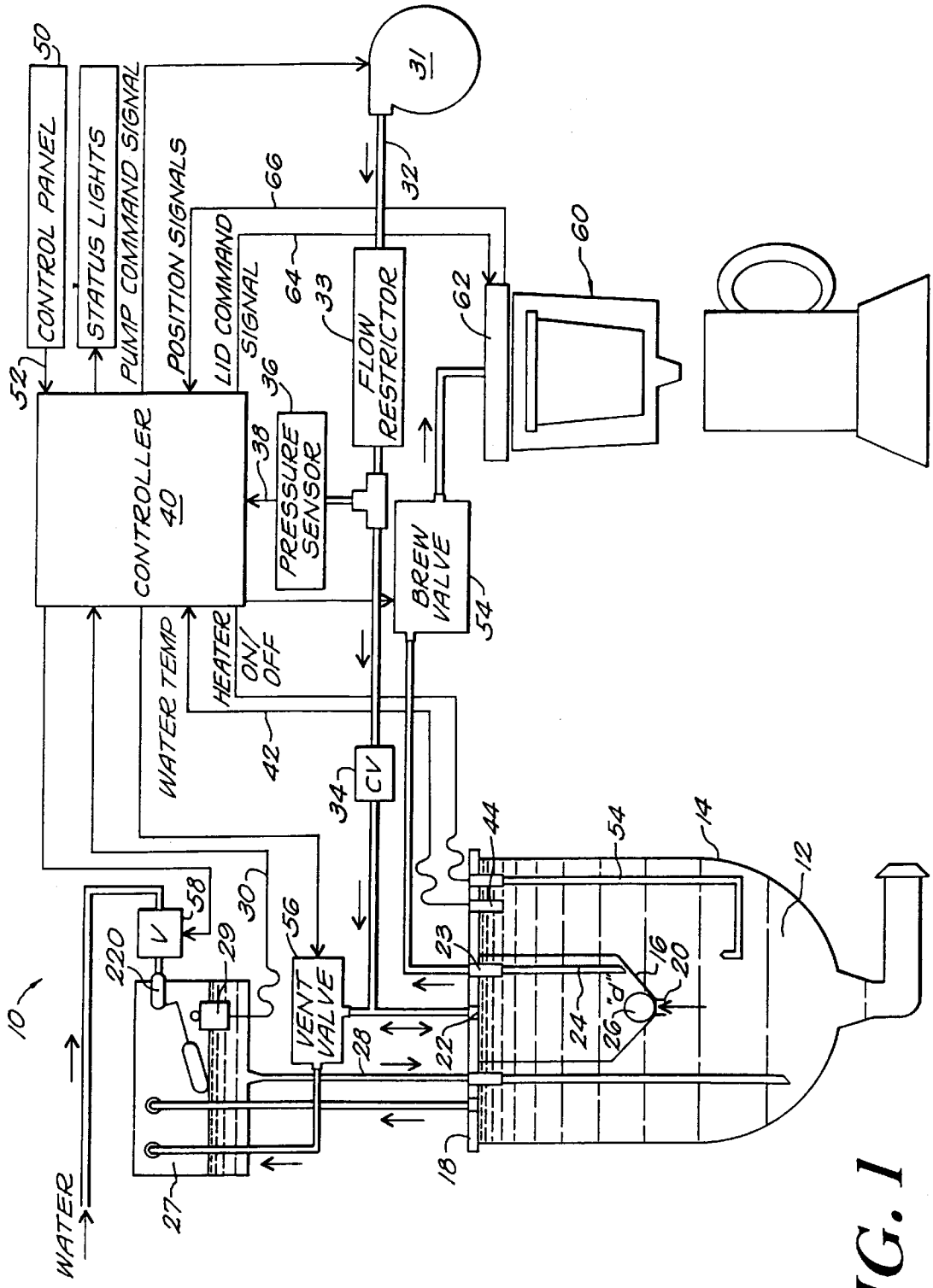
CONTROL PANEL
STATUS LIGHTS
PUMP COMMAND SIGNAL
POSITION SIGNALS
LID COMMAND SIGNAL
CONTROLLER 40
PRESSURE SENSOR
FLOW RESTRICTOR
BREW VALVE
HEATER ON/OFF
WATER TEMP
CV
VENT VALVE
V
WATER
"d"
10
12
14
16
18
20
22
23
24
26
27
28
29
30
31
32
33
34
36
38
42
44
50
52
54
56
58
60
62
64
66
220

FIG. 1

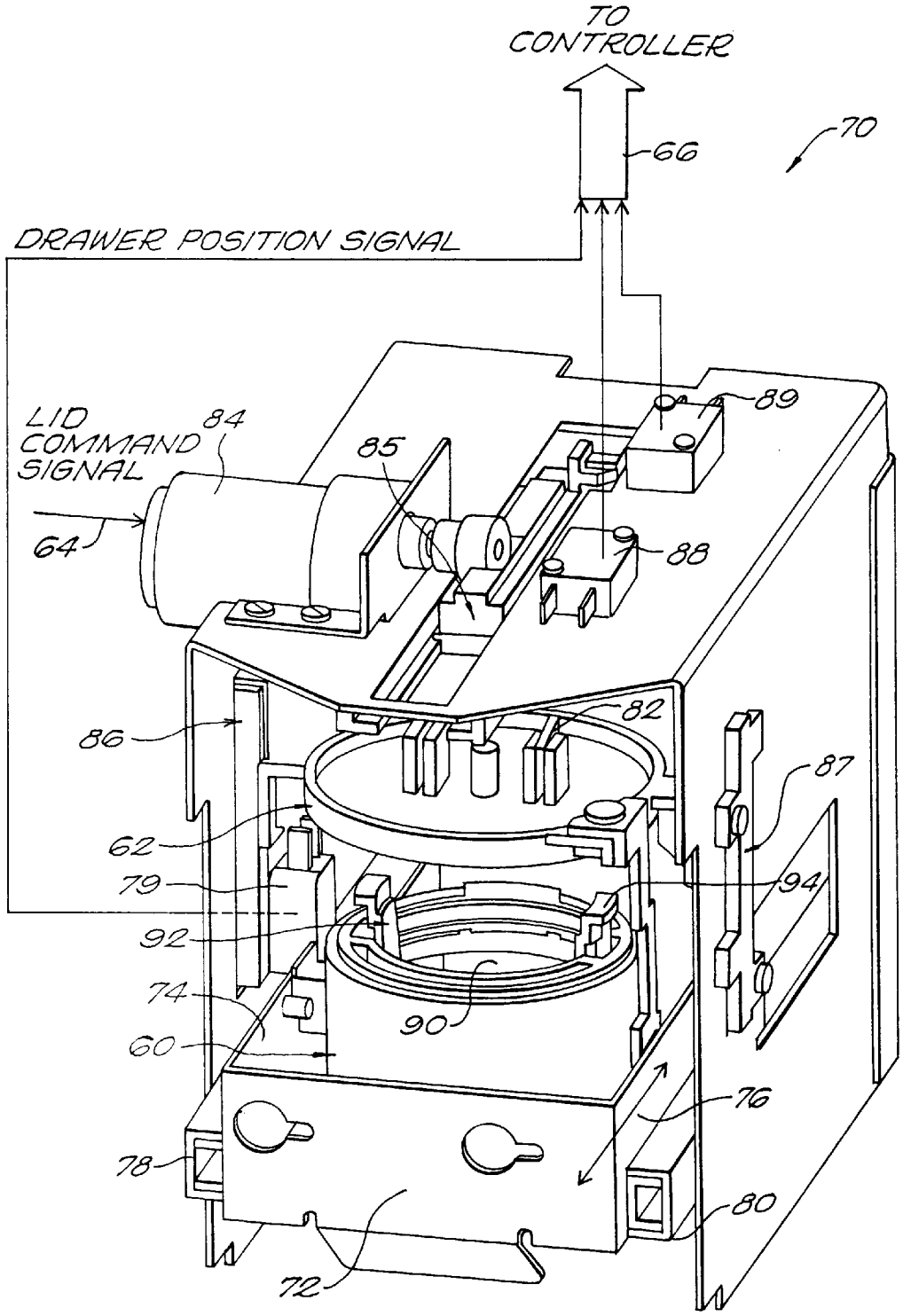
TO CONTROLLER
66
70
DRAWER POSITION SIGNAL
LID COMMAND SIGNAL
84
85
89
64
88
86
82
87
62
79
94
92
74
90
60
76
78
80
72

FIG. 2

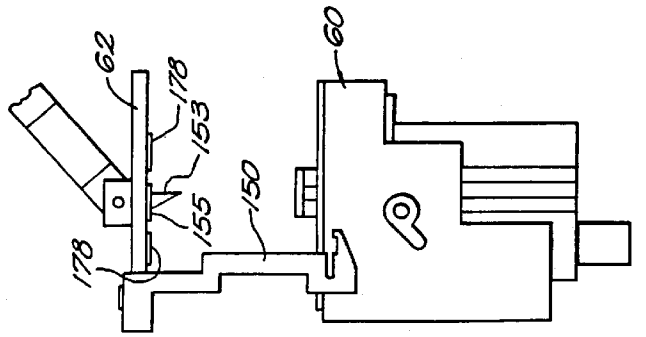

READY POSITION

FIG. 3D

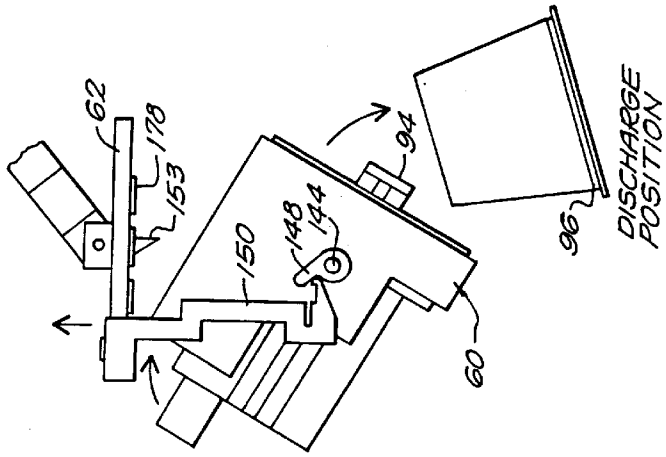

FIG. 3C

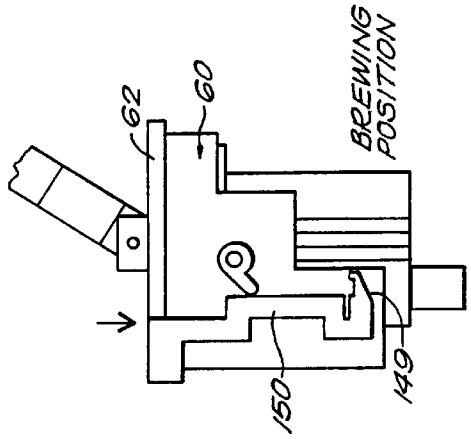

FIG. 3B

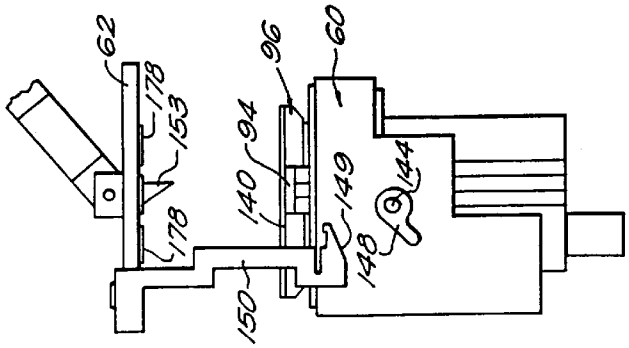

READY POSITION

FIG. 3A

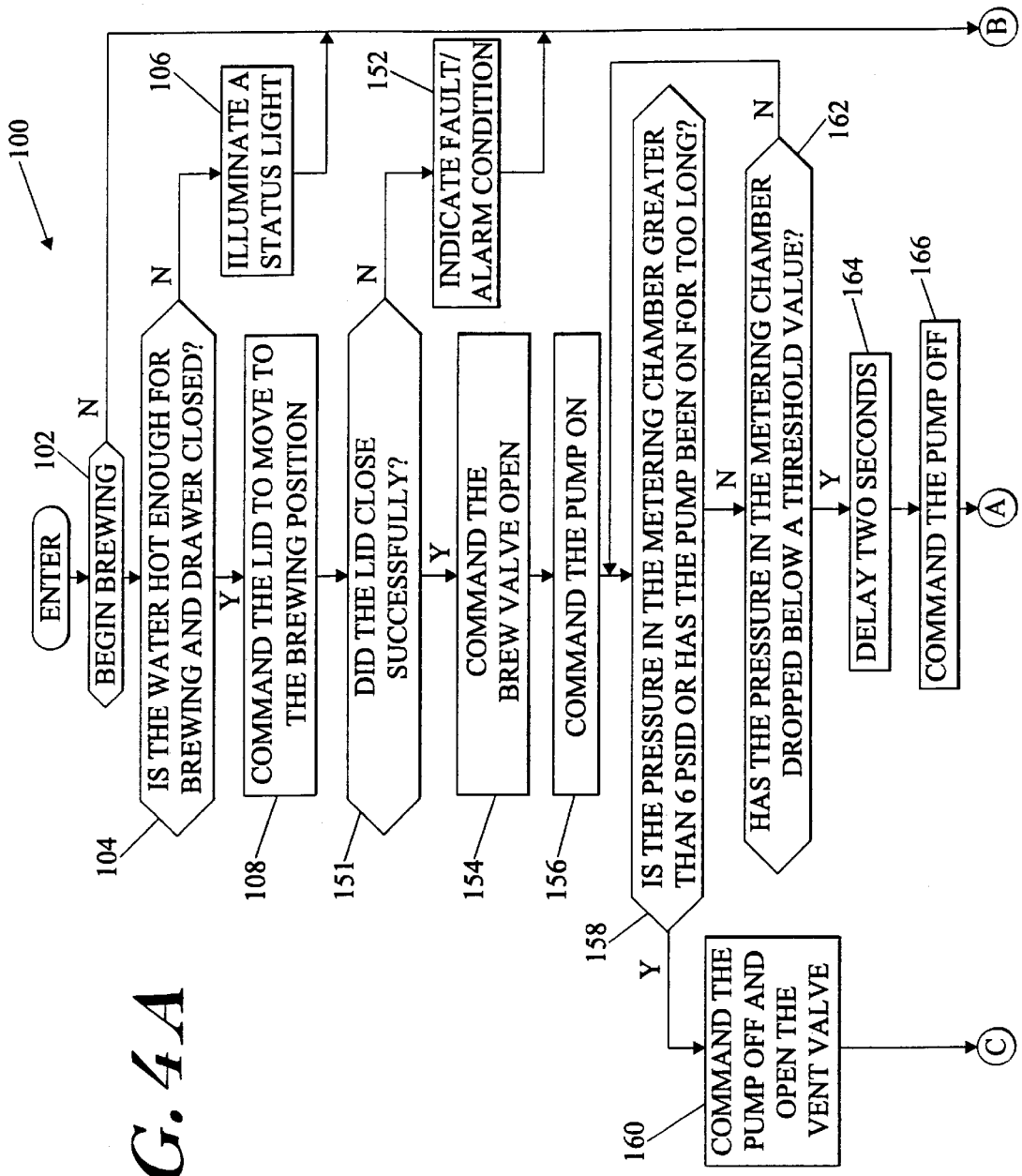
100
ENTER
102
BEGIN BREWING
N
104
IS THE WATER HOT ENOUGH FOR BREWING AND DRAWER CLOSED?
N
106
ILLUMINATE A STATUS LIGHT
Y
108
COMMAND THE LID TO MOVE TO THE BREWING POSITION
151
DID THE LID CLOSE SUCCESSFULLY?
N
152
INDICATE FAULT/ ALARM CONDITION
Y
154
COMMAND THE BREW VALVE OPEN
156
COMMAND THE PUMP ON
158
IS THE PRESSURE IN THE METERING CHAMBER GREATER THAN 6 PSID OR HAS THE PUMP BEEN ON FOR TOO LONG?
Y
160
COMMAND THE PUMP OFF AND OPEN THE VENT VALVE
C
N
162
HAS THE PRESSURE IN THE METERING CHAMBER DROPPED BELOW A THRESHOLD VALUE?
N
Y
164
DELAY TWO SECONDS
166
COMMAND THE PUMP OFF
A
B

FIG. 4A

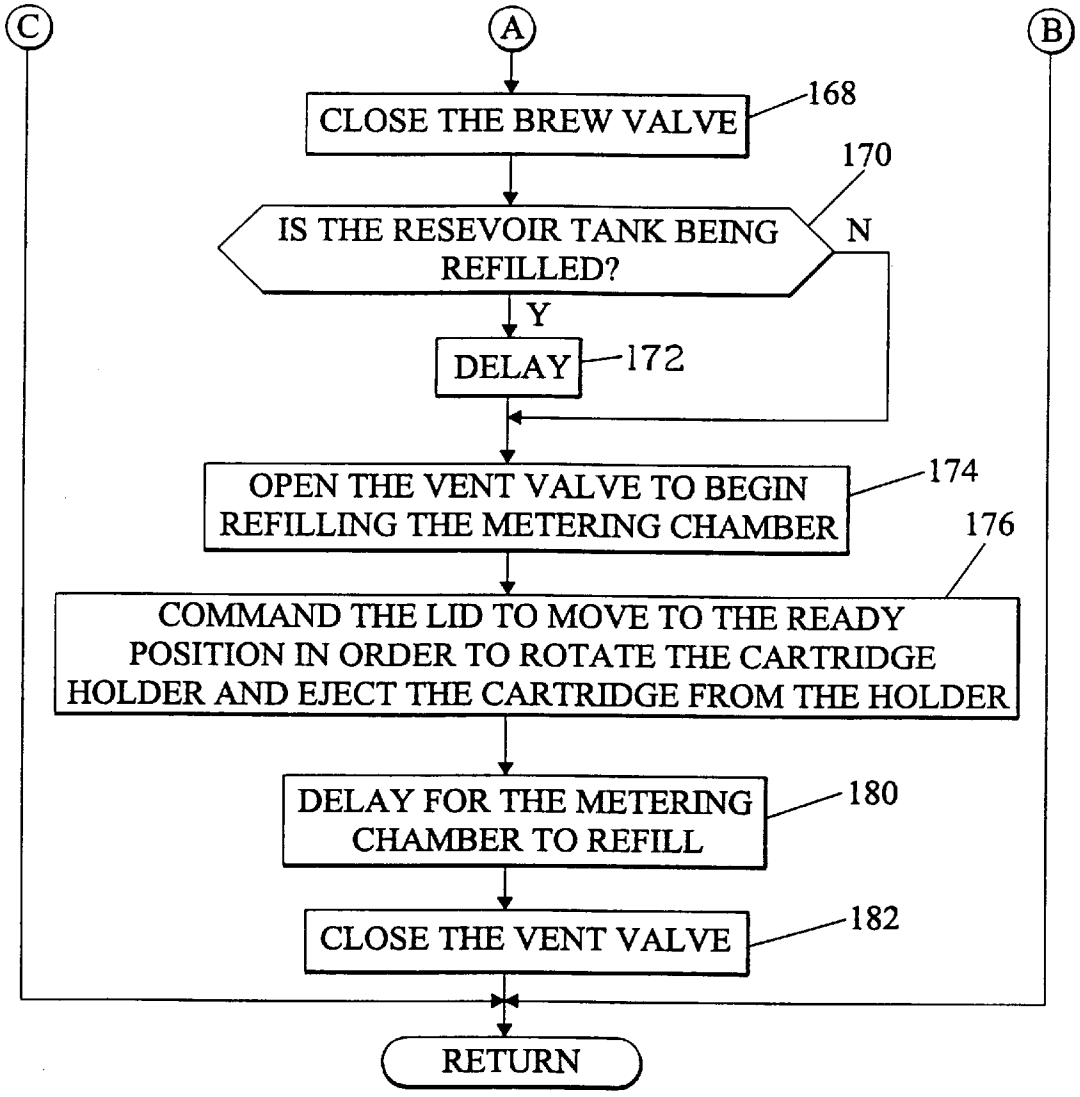
C
A
B
CLOSE THE BREW VALVE
168
170
IS THE RESEVOIR TANK BEING REFILLED?
N
Y
DELAY
172
OPEN THE VENT VALVE TO BEGIN REFILLING THE METERING CHAMBER
174
176
COMMAND THE LID TO MOVE TO THE READY POSITION IN ORDER TO ROTATE THE CARTRIDGE HOLDER AND EJECT THE CARTRIDGE FROM THE HOLDER
DELAY FOR THE METERING CHAMBER TO REFILL
180
CLOSE THE VENT VALVE
182
RETURN

FIG. 4B

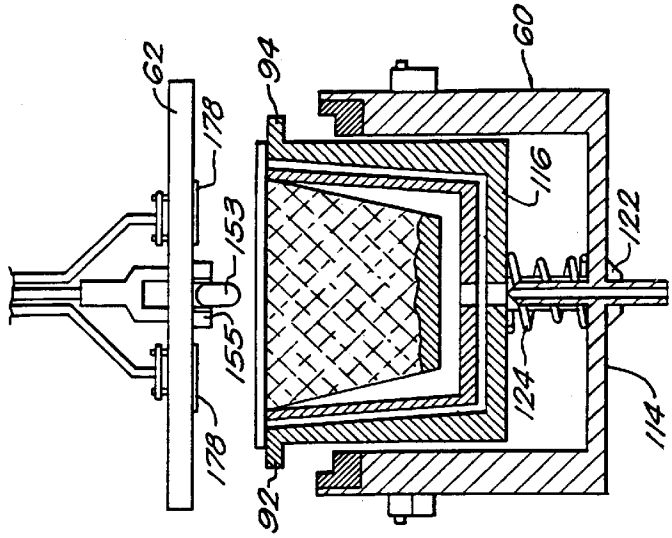

FIG. 5C

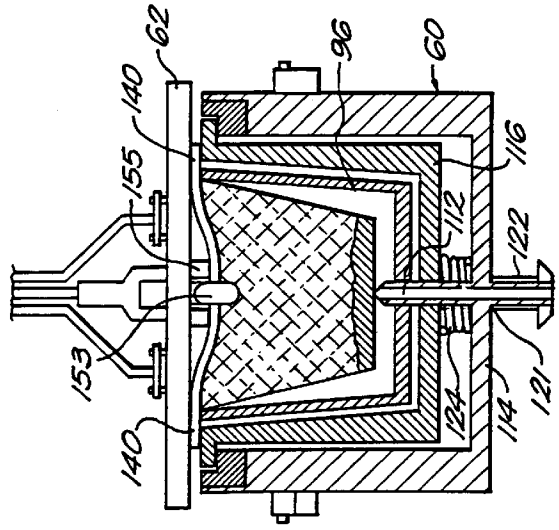

BREWING POSITION

FIG. 5B

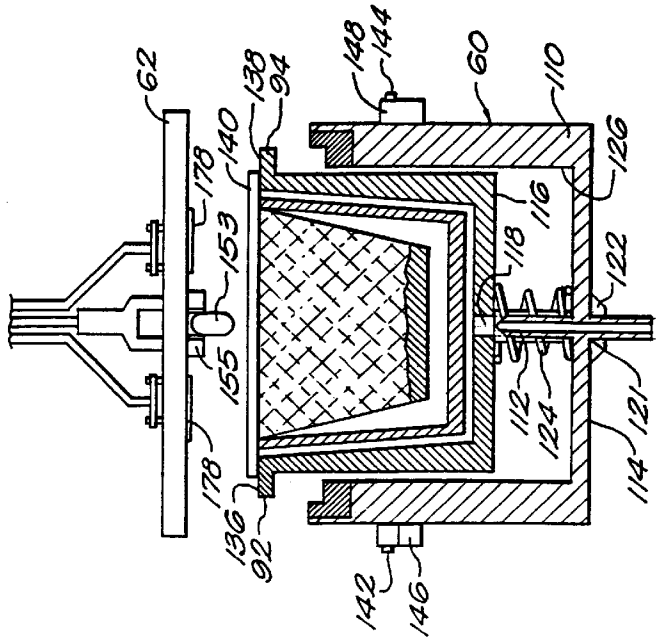

READY POSITION

FIG. 5A

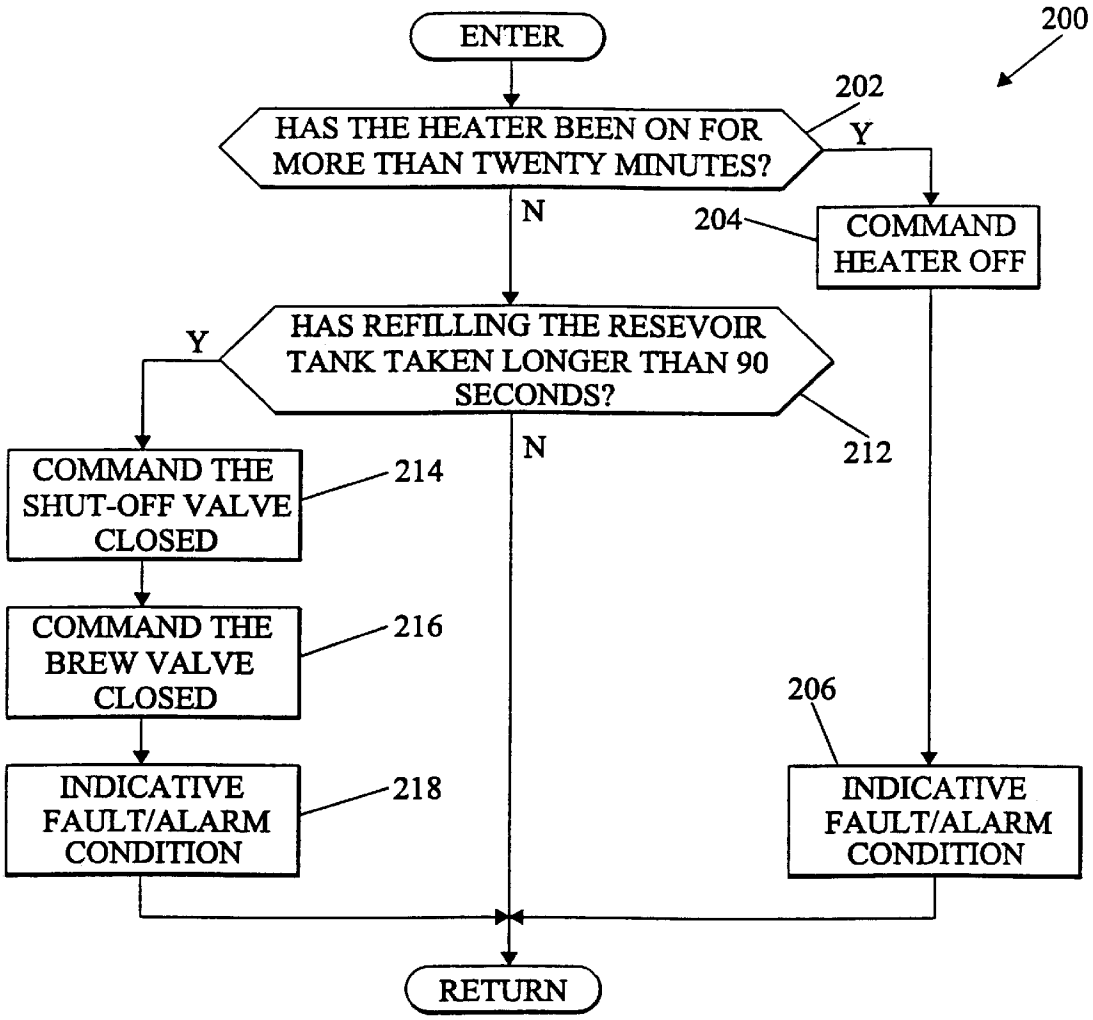
200
ENTER
202
HAS THE HEATER BEEN ON FOR MORE THAN TWENTY MINUTES?
Y
N
204
COMMAND HEATER OFF
Y
HAS REFILLING THE RESEVOIR TANK TAKEN LONGER THAN 90 SECONDS?
N
212
COMMAND THE SHUT-OFF VALVE CLOSED
214
COMMAND THE BREW VALVE CLOSED
216
206
INDICATIVE FAULT/ALARM CONDITION
218
INDICATIVE FAULT/ALARM CONDITION
RETURN

FIG. 6

AUTOMATED BEVERAGE BREWING SYSTEM

CROSS REFERENCE TO RELATED APPLICATIONS

This application contains subject matter that relates to the following applications filed evendate herewith, identified as Ser. No. 09/232,993 entitled "Beverage Filter Cartridge Holder" and Ser. No. 09/233,272 entitled "Apparatus for Consecutively Dispensing an Equal Volume of Liquid", both hereby incorporated by reference.

BACKGROUND OF THE INVENTION

This invention relates generally to beverage dispensing and brewing systems, and in particular with an improved apparatus for providing a brewed beverage.

Many different coffee brewing systems have been designed. Most utilize a pump, such as a peristaltic pump, to transfer water from a reservoir through a conduit to a brewing chamber. The pump is turned on at the beginning of a brewing cycle and at the end of a specific time period the pump is turned off. Other brewing systems use an electrically controlled device to open a valve at the bottom of a reservoir. Through gravity the water travels through a conduit to a brewing chamber. Again at the end of a specific time period, the valve is closed. These prior brewing systems lack the capability of consistently dispensing equal volumes of liquid. The systems are dependent on the accuracy of the timers, the pressure of the liquid, etc.

An object of the present invention is to provide an automated beverage brewing system for consistently dispensing a predetermined volume of liquid from a storage tank.

SUMMARY OF THE INVENTION

Briefly, according to the present invention, a beverage brewing system uses compressed air to drive a predetermined amount of liquid from a metering chamber for use in preparing a brewed beverage.

In one embodiment, the beverage brewing system includes a liquid storage tank and a metering chamber. The metering chamber is at least partially submerged beneath a standing level of liquid in the storage tank. The chamber includes a sealable liquid inlet port communicating with the interior of the storage tank beneath the standing level of liquid. The chamber also includes a liquid outlet port and an aperture that receives compressed air, wherein the compressed air forces a predetermined amount of liquid from the liquid output port of the chamber for use in preparing a brewed beverage. A pump provides the compressed air and a controller monitors a sensed pressure signal value indicative of the air pressure in the metering chamber. The controller commands the pump on to commence flow of the predetermined amount of liquid from the metering chamber. The controller then commands the pump off several seconds after detecting a drop in air pressure within the chamber, indicating that the predetermined amount of liquid has been delivered to the brewing chamber. The chamber is then vented to ambient pressure, which opens the sealable liquid inlet port and allows liquid to flow from the storage tank into the chamber. The sealable liquid inlet port automatically closes to complete the resupply of the metering chamber. To vent the chamber to ambient the controller commands an electrically controllable vent valve to the open position.

These and other objects, features and advantages of the present invention will become apparent in light of the following detailed description of preferred embodiments thereof, as illustrated in the accompanying drawings.

BRIEF DESCRIPTION OF THE DRAWINGS

FIG. **1** is a diagrammatic illustration of an automated brewing system in accordance with the present invention;

FIG. **2** is a pictorial illustration of a component of the brewing system that includes a cartridge holder and a lid;

FIGS. **3A–3D** are side views of the cartridge holder and the lid in various operational positions;

FIGS. **4A** and **4B** are flow charts that together illustrate steps performed by a controller during a brewing cycle;

FIGS. **5A–5C** are simplified cross sectional front views of the cartridge holder and the lid in various operational positions; and

FIG. **6** is a flow chart of a built-in-test routine periodically performed by the controller.

DETAILED DESCRIPTION OF THE INVENTION

The present invention is specially adapted for use in, although not limited in application to, a brewing system **10** illustrated in FIG. **1**. Here, the dispensed liquid is water that is heated to a predetermined elevated temperature to brew beverages from extracts (e.g., coffee, tea, powders and concentrates) contained in disposable hermetically sealed cartridges. The brewing system consistently dispenses equal volumes of water **12** from a storage tank **14**. A small metering chamber **16** is the primary dispensing component. The metering chamber **16** is at least partially submerged beneath the standing level of water **12** in the tank **14**. A cover **18** overlies and hermetically seals both the tank and the metering chamber.

The metering chamber **16** has an inlet port **20** on the bottom thereof to accommodate water inflow from the tank **14**, a pneumatic port **22**, and a third port **23** that accommodates penetration into the metering chamber of a discharge conduit **24** to a depth "d". A one way valve accommodates an inflow of water from the tank **14** into the metering chamber **16** through the inlet port **20**. In a preferred embodiment herein chosen for purposes of disclosure, the one way valve comprises a silicone ball **26** sized to gravitationally seat in and seal the inlet port **20**. As shown, the ball **26** is seated in a closed position to prevent outflow of water from the metering chamber **16** via the inlet port **20**. As will hereinafter be explained, the ball **26** is adapted to be dislodged from the inlet opening by an inflow of water from the storage tank **14**.

The storage tank **14** receives water from a reservoir **27** via a fill conduit **28**. An electrical float switch **29** is located in the reservoir **27** and provides a signal on a line **30** indicative of the water level in the reservoir.

An air pump **31** (e.g., a diaphragm pump) provides compressed air into a conduit **32**, which routes the compressed air through flow restrictor **33** and a check valve **34** and into the pneumatic port **22**. The flow restrictor **33** provides smoother compressed air. A pressure sensor **36** monitors the pressure within the conduit **32** and provides a sensed pressure signal value indicative thereof on a line **38** to a system controller **40**. The controller **40** also receives a sensed temperature signal on a line **42** from a temperature sensor **44** (e.g., a thermistor) that monitors water temperature in the storage tank **14**. In addition, the controller **40** receives input signals from a brewer control panel **50** such as a start brewing signal on a line **52**, and the reservoir water level signal on the line **30**.

The system also includes a brew valve **54**, a vent valve **56** and a water shut-off valve **58**. Each of these valves **54**, **56** and **58** operate in open or closed states, in response to command signals from the controller **40**.

The system **10** further comprises a beverage cartridge holder **60** that cooperates with an axially moveable lid **62**, which is responsive to a lid position command signal on a line **64** from the controller **40**. The controller **40** receives various position signals on a line **66**, that include lid position signals that are used to verify that the lid has moved to its commanded position.

FIG. **2** is a pictorial illustration of a brew head assembly **70** comprising the beverage cartridge holder **60** and the axially moveable lid **62**. The system **70** includes a slidable drawer **72** comprising side panels **74**, **76** that each include a mounting hole (not shown), which together pivotally mount the beverage cartridge holder **60** to the slidable drawer **72**. The drawer **72** slides along track assembles **78**, **80**. A drawer microswitch **79** provides a drawer position signal on the line **66** indicative of whether or not the drawer is in the closed position.

The axially moveable lid **62** is manipulated by a linkage yoke **82** (partially shown), driven by an electric motor **84** through a pinion driven rack **85**. The lid is axially guided along vertical side tracks **86**, **87** between a ready position and a beverage brewing position. In the ready position the lid is axially positioned above and separated from the cartridge holder **60**, assuming of course that the slidable drawer **72** is in the closed position. Microswitches **88**, **89** detect if the lid is in the ready position or the beverage brewing position and provide the lid position signals on the line **66**. The holder includes a chamber **90**, and cartridge ejection arms **92**, **94** that support and position a beverage cartridge (not shown) within the holder.

FIG. **3**A is a side view of the cartridge holder **60** and the lid **62**. As shown, a beverage cartridge **96** (preferably disposable) has been inserted into the cartridge holder **60**. A preferred beverage cartridge is disclosed in U.S. Pat. No. 5,840,189, which is assigned to the assignee of the present invention and hereby incorporated by reference. A preferred cartridge holder is disclosed in co-pending application identified as Serial Number TBD, filed Jan. 19, 1999 and entitled "Beverage Filter Cartridge Holder", also assigned to the assignee of the present invention and incorporated by reference.

Referring again to FIGS. **1**, in general the controller **40** monitors the pressure and temperature signals on the lines **38**, **42** and the start brewing signal on the line **52** to control the pump **31**, the tank heater **54** and various valves in the system. We shall now discuss the system control in more detail.

FIGS. **4**A and **4**B are flow charts that together illustrate a brew cycle routine **100** performed by the controller **40** (FIG. **1**) during a brewing cycle. The controller **40** is preferably a microcontroller (MCU) such as a model PIC16C72-4 manufactured by Microchip Technology, Inc. of Phoenix, Ariz. This microcontroller includes on chip program memory, RAM, a RISC CPU and an analog-to-digital converter (ADC). In this embodiment, the steps illustrated in FIGS. **4**A and **4**B represent executable program instructions that are stored in the MCU program memory and periodically executed by the CPU.

The routine **100** includes a test **102** that determines if the brewing process should begin. This test checks the state of the start brewing signal on the line **52** (FIG. **1**). If the signal indicates that a user has not depressed the start brewing button, then the remaining steps of the routine **100** are not executed. However, if the start brewing signal indicates that the user has depressed the start brewing button, test **104** is performed to determine if the water temperature is hot enough for brewing. The test **104** checks the sensed temperature signal value on the line **42** and if the temperature is too low, then step **106** is executed to illuminate a status light (e.g., a yellow light) and the routine **100** is ended. If the water temperature is hot enough for brewing step **108** commands the lid **62** (FIG. **2**) to move to the beverage brewing position. Specifically, the controller sends a lid command signal on the line **64** (FIG. **1**) to the motor **84** (FIG. **2**), which axially drives the lid **62** along the vertical side tracks **86**, **87** (FIG. **1**) from the ready position to the beverage brewing position. We shall now briefly discuss the holder **60** and the lid **62**.

FIG. **3**A illustrates the cartridge holder **60** populated with the cartridge **96**, and the lid **62** in the ready position. FIG. **5**A is a simplified cross sectional front view with the beverage cartridge **96** inserted into the holder **60**, and the lid **40** in the ready position. The holder includes a housing **110** having an upwardly extending hollow piercing member **112** secured to a base surface **114**. A slidable cartridge platform **116** having a bore **118** formed therein is coaxial with the upwardly extending piercing member **112**, which allows the member **112** to extend through the slidable cartridge platform **116**. The hollow piercing member includes a circular lip that rests on the periphery of a base surface opening **121**, and an outwardly extending conduit **122** that passes through a base surface opening **121** and extends below the base surface **114**.

A resilient member **124** (e.g., a spiral spring) is operatively located between the base surface **114** and the slidable cartridge platform **116**. A sidewall **126** extends axially from the base surface **114** to define the chamber **90** (FIG. **2**) that is sized to receive the cartridge **96**. The sidewall **126** includes first and second guide channels (not shown) that engage cartridge ejection arms **92**, **94**, respectively, allowing the slidable cartridge platform **116** to axially move within the chamber. The cartridge ejection arms **92**, **94** are connected to the slidable cartridge platform **116**, and have axial end surfaces **136**, **138** that contact and support a radially outwardly protruding lip **140** of the cartridge **96**.

A pair of radially outwardly extending trunnions **142**, **144** cooperate with holder mounting holes (not shown) in the side panels **74**, **76** (FIG. **2**) to pivotally support the holder. Pawls **146**, **148** are used to position the holder **60** about the axis extending through the trunnions **142**, **144**.

FIGS. **3**B and **5**B illustrate a side view and a simplified cross sectional view of the holder populated with the cartridge, and the lid in the beverage brewing position. As the lid **62** moves from the ready position (FIGS. **3**A and **5**A) axially downward to the beverage brewing position (FIGS. **3**B and **5**B), an inclined surface **149** of a downward projecting pivot arm **150** that is attached to the lid contacts the pawl **148**. The pivot arm **150** and its inclined surface **149** are preferably a flexible plastic allowing the pivot arm to bend slightly away as the surface **149** slides downwardly against the pawl. As the lid continues axially downward the inclined surface passes below the pawl **148** and the pivot arm flexes back. The lid then applies an axial positioning force to the radially outwardly protruding lip **140** of the cartridge, moving the slidable cartridge platform **116** deeper into the chamber and compressing the resilient member **124**. The force applied by the lid **62** causes a downwardly projecting apertured probe **153** to pierce the top of the cartridge **96** establishing a flow inlet that provides a liquid (e.g., hot water) to the interior of the cartridge. The force also causes

the hollow piercing member **112** to extend through the bore **118** and pierce a bottom surface of the cartridge, to provide an exit flow path for a brewed beverage through the slidable cartridge platform **116** and the base surface **114**. A foam gasket **155** surrounds the downwardly projecting apertured probe **153**.

Referring again to FIG. **4**A, following the step **108** the controller performs a test **151** to determine if the lid has successfully moved into the beverage brewing position. This test is performed by checking the status of the lid position signals on the line **66** (FIG. **1**) from the microswitches **88**, **89** (FIG. **1**). If the lid has not successfully closed, step **152** is executed to annunciate the fault/alarm condition and the routine **100** is ended. However, if the lid has closed successfully, step **154** commands the brew valve **54** (FIG. **1**) to open and step **156** commands the pump **31** (FIG. **1**) on.

Referring now to FIG. **1**, as the pump **31** drives compressed air into the metering chamber **16**, the water in the metering chamber is driven into the discharge conduit **24** and passes through the brew valve **54** into the cartridge holder **60**. The increased pressure within the metering chamber **16** firmly seats the silicone ball **26** over the inlet **20** to prevent flow from the storage tank **14** to the metering chamber **16**. As shown in FIG. SB, the water from the metering chamber (not shown) enters the cartridge **96** through the downwardly projecting apertured probe **153**, passes through beverage extract and a filter within the cartridge, and exits the cartridge **96** through the hollow piercing member **112**.

Referring again to FIG. **4**A, the controller performs a safety test **158** to monitor the sensed pressure signal value on the line **38** (FIG. **1**), which is representative of the pressure in the metering chamber. If the pressure rises to more the **6** PSI above ambient pressure, then step **160** commands the pump off and the vent valve **56** (FIG. **1**) to the open position in order to release the pressure in the metering chamber **16** (FIG. **1**). The test **158** also checks if the pump has been on for more than a limit amount (e.g., one minute) and executes the step **160** if it has. If an over pressure or a time-out situation does not exist, test **162** is performed to determine if the air pressure in the metering chamber has dropped below a threshold value indicating that a predetermined amount of liquid (e.g., eight fluid ounces) has exited the metering chamber. This test **162** monitors the sensed pressure value on the line **38** (FIG. **1**). The threshold value is preferably a fraction of the maximum sensed pressure during the brewing cycle. For example, the threshold may be 75% of the maximum sensed pressure during the brewing cycle. Alternatively, the threshold may be a constant value.

Once the sensed pressure drops below the threshold value, step **164** is performed to delay several seconds in order to blow residual liquid from the liquid flow path located between the metering chamber and the cartridge holder outlet. Significantly, blowing out the flow path ensures that only hot water is used to brew, which is especially important if there is a substantial period between use. In addition, blowing out the flow path removes liquid from the used cartridge for cleaner disposal. One of ordinary skill will recognize that during the delays the controller performs other tasks such as input signal processing, output signal processing, storage tank temperature control, reservoir water level control, and background and foreground built-in-tests. The delays may be implemented by hardware or software counters.

Steps **166**, **168** are then executed to command the pump off and close the brew valve **54** (FIG. **1**). At this time the metering chamber is still pressurized and includes only a small amount of water that is located below the discharge conduit **24** (FIG. **1**).

Test **170** is performed to determine if the shut-off valve **58** (FIG. **1**) is opened, indicating that the reservoir **27** (FIG. **1**) is still being refilled from previous brewing cycles. If it is, then refilling of the metering chamber is delayed by step **172**. Refilling the metering chamber begins when step **174** commands the vent valve **56** (FIG. **1**) to open. This reduces the air pressure in the metering chamber to ambient pressure, causing the silicone ball **26** (FIG. **1**) to be unseated and water to enter the chamber through the inlet **20** (FIG. **1**). The water fills the metering chamber and the silicone ball gravitationally reseats in the liquid inlet. The reservoir **27** (FIG. **1**) refills the storage tank **14** via the fill conduit **28**.

Step **176** is then performed to move the lid from the beverage brewing position to the ready position. FIG. SC illustrates a transitional lid position as the lid moves from the brewing position to the ready position, illustrating the cartridge withdrawn from the hollow piercing member **112**. Significantly, as the lid moves upward the resilient member **124** expands causing the slidable cartridge platform **116** to move axially upward withdrawing the cartridge **96** from the hollow piercing member **112**. Referring to FIG. **3**C, the downward projecting pivot arm **150** engages the underside of the pawl **148** as the lid moves to the ready position. Specifically, as the lid axially moves from the brewing position to the ready position the pivot arm contacts the underside of the pawl **148** causing the holder to rapidly rotate about the trunnions. The other pawl **146** cooperates with stops (not shown) located on the sidewall **74** (FIG. **2**) to limit the pivotal movement of the holder between the upright position and discharge positions (e.g., about 135 degrees of rotation). As the holder rapidly rotates, the pawl **146** strikes one of the stops abruptly stopping the rotation of the holder and ejecting the cartridge. Advantageously, this automatically removes the cartridge from the holder upon the completion of the brewing cycle. As the lid continues moving upward to the ready position, the pivot arm disengages from the pawl and allows the empty cartridge holder to pivot about the trunnions back to the upright position, as shown in FIG. **3**D. To ensure the lid **62** separates from the top of the cartridge **96**, a plurality of projections **178** are located on the underside of the lid **62**. For example, the projections **178** may radially extend from the center of the underside of the lid. The foam gasket **155** also assists in separating the lid **62** from the top of the cartridge **96**.

Referring yet again to FIG. **4**B, step **180** is performed to delay several seconds to ensure there is enough time between opening of the venting valve in the step **174** and closing of the valve in step **182** for the metering chamber to refill.

To brew another beverage, the drawer **22** (FIG. **1**) is opened and a new cartridge is inserted into the holder.

FIG. **6** is a flow chart of a built-in-test routine **200** periodically performed by the controller. The routine **200** includes a test **202** to determine if the heater **54** (FIG **1**) has been on for an excessive amount of time (e.g., twenty minutes). If it has, step **204** is performed to command the heater off, followed by step **206** to annunciate the fault/alarm condition. Otherwise, test **208** is performed to determined if the metering chamber **16** (FIG. **1**) is over pressurized. If it is, then step **210** is performed to turn the pump off and open the vent valve followed by the step **206** to annunciate the fault/alarm condition. However, if over pressurization does not exist, test **212** checks if the shut-off valve **58** (FIG. **1**) has

been opened for too long (e.g., ninety seconds). If it has, steps **214**, **216** and **218** are performed to close the shut-off and brew valves and indicate a fault/alarm condition. Notably, referring again to FIG. **1**, the system **10** preferably includes a float type shut-off valve **220** that closes if the water level in the reservoir is too high. This valve is redundant with the electrically controllable shut-off valve **58** (FIG. **1**), and this redundancy virtually eliminates single point failures from causing overfilling.

Referring finally to FIG. **1**, the controller **40** also performs reservoir water level control by monitoring the reservoir water level signal on the line **30**. The controller opens the shut-off valve **58** when the reservoir water level falls below a lower limit and closes the valve when the level is above an upper limit.

While the present invention has been described in the context of a preferred embodiment that senses air pressure to determine when the predetermined amount of liquid has been delivered from the metering chamber, the present invention is not so limited. For example, a level sensor (e.g., a float switch) may be located in the metering chamber to determine when the liquid in the chamber is below a certain level. In addition, the pump may be simply commanded on for a set period of time sufficient to ensure that the predetermined amount of liquid has been delivered from the metering chamber. Notably, it suffices that in all these embodiments of the present invention compressed air is used to drive the predetermined amount of liquid from the metering chamber.

Although the present invention has been discussed in the context of an automated brewing system that includes a microcontroller, one of ordinary skill will recognize that there a number of different techniques for controlling the delivery of the compressed air to the metering chamber. For example, a state machine may be used rather than a CPU. In addition, the controller may be an analog system rather than a digital controller. Furthermore, a pneumatic controller rather than an electronic controller may be used to control delivery and venting of the compressed air. While obvious, it should also be noted the present invention is certainly not limited to the delay values, threshold values or brewing sizes discussed herein. In addition, it is contemplated that rather than an electrically controllable valve, the vent valve may be mechanically linked to the lid so the valve opens as the lid moves from the beverage brewing position to the ready position. The present invention may also operate in a "vending" environment. That is, as a vending machining, the system would not start brewing until money has been deposited or an account debited. For example, test **104** (FIG. **4**A) may check to ensure the required fee has been paid before brewing is allowed to start.

Although the present invention has been shown and described with respect to several preferred embodiments thereof, various changes, omissions and additions to the form and detail thereof, may be made therein, without departing from the spirit and scope of the invention.

What is claimed is:

1. A brewing system for brewing a beverage from an extract contained in a sealed disposable cartridge, said system comprising:

a housing defining a brewing chamber for receiving said cartridge;

means associated with said housing means for piercing said cartridge to provide a first inlet and a first outlet communicating with the interior of said cartridge;

a storage tank comprising a supply of liquid;

a sealed metering chamber contained in said storage tank at least partially submerged in said liquid, said chamber being in communication with said storage tank via a second inlet and being in communication with said cartridge via a second outlet;

valve means associated with said second inlet for admitting liquid into said chamber from said storage tank and for preventing reverse liquid flow from said chamber into said tank;

means for delivering compressed air to said metering chamber to transfer a predetermined volume of liquid from said metering chamber via said second outlet for delivery to and through said cartridge via said first inlet and said first outlet, and for sensing the pressure of said compressed air and providing a sensed pressure signal value indicative thereof; and

a controller that (i) commands said means for delivering to provide compressed air to said metering chamber, (ii) monitors said sensed pressure signal value and (iii) commands said means for delivering to terminate delivery of compressed air to said metering chamber after detecting that said sensed pressure signal value has dropped below a threshold value indicating said predetermined volume of liquid has been delivered through said second outlet.

2. The brewing system of claim **1**, wherein said means for delivering comprises:

a pump for generating said compressed air;

a flow line that receives and provides said compressed air to said metering chamber; and

a pressure sensor disposed to sense the pressure of said compressed air within said flow line and provide said sensed pressure signal value.

3. The brewing system of claim **2** wherein said controller commands off said means for delivering to terminate delivery of said compressed air a predetermined time after detecting that said sensed pressure signal value has dropped below a threshold value.

4. The brewing system of claim **3**, further comprising a vent valve that includes an inlet in communication with said compressed air within said metering chamber and is responsive to a vent valve control signal from said controller, wherein said controller commands said vent valve to open to vent said compressed air within said metering chamber to ambient pressure.

5. An automated beverage brewing system that receives a cartridge containing a beverage extract and establishes a liquid flow path through the cartridge to provide a brewed beverage that includes a predetermined volume of liquid, said system comprising:

a holder that holds and pierces the cartridge to provide a cartridge inlet and a cartridge outlet that together establish a flow path through the beverage extract to provide the brewed beverage;

a liquid storage tank;

a sealed metering chamber at least partially submerged beneath a standing level of liquid in said storage tank, and having a chamber inlet port communicating with the interior of said tank beneath said level of liquid and a chamber outlet port connected to said holder;

a pump that provides compressed air along a flow line to said metering chamber to force liquid from said metering chamber and through said chamber outlet port;

a sensor that senses air pressure in said flow line and provides a sensed pressure signal indicative thereof; and

a controller that commands said pump on, monitors said sensed pressure signal and turns said pump off after detecting that said sensed pressure signal value has dropped below a threshold value indicating the predetermined volume of liquid has been delivered through said chamber outlet port.

6. The brewing system of claim **5**, wherein said controller also commands said pump off if said sensed pressure signal value exceeds an upper pressure threshold value.

7. The brewing system of claim **6**, further comprising:

a temperature sensor that senses the temperature of the liquid in said storage tank and provides a sensed temperature signal value indicative thereof, wherein said controller monitors said sensed temperature signal value and will not command said pump on if said sensed temperature signal value is below a temperature threshold value.

8. The brewing system of claim **5**, further comprising a vent valve responsive to a vent valve command signal from said controller for releasing said compressed air within said sealed metering chamber.

* * * * *