Trials@uspto.gov
571-272-7822

Paper 29
Entered: May 5, 2022

UNITED STATES PATENT AND TRADEMARK OFFICE

BEFORE THE PATENT TRIAL AND APPEAL BOARD

APPLE INC.,
Petitioner,

v.

MASIMO CORPORATION,
Patent Owner.

IPR2020-01722
Patent 10,470,695 B2

Before JOSIAH C. COCKS, ROBERT L. KINDER, and AMANDA F. WIEKER, *Administrative Patent Judges.*

COCKS, *Administrative Patent Judge*.

JUDGMENT
Final Written Decision
Determining All Challenged Claims Unpatentable
35 U.S.C. § 318(a)

APPLE 1074

I. INTRODUCTION

A. Background

Apple Inc. ("Petitioner") filed a Petition requesting an *inter partes* review of claims 1–6, 8, 9, 11–19, and 21–30 of U.S. Patent No. 10,470,695 B2 (Ex. 1001, "the '695 patent"). Paper 2 ("Pet."). We instituted the petitioned review. Paper 8 ("Institution Decision" or "Inst. Dec.").

Masimo Corporation ("Patent Owner") filed a Patent Owner Response (Paper 13, "PO Resp.") to oppose the Petition. Petitioner filed a Reply (Paper 18, "Pet. Reply") to the Patent Owner Response. Patent Owner filed a Sur-reply (Paper 19, "PO Sur-reply") to the Reply. We conducted an oral hearing on February 9, 2022. A transcript has been entered in the record (Paper 28, "Tr.").[1]

We have jurisdiction under 35 U.S.C. § 6(b)(4) and § 318(a). This Decision is a final written decision under 35 U.S.C. § 318(a) and 37 C.F.R. § 42.73 as to the patentability of claims 6, 14, and 21 of the '695 patent. We determine Petitioner has shown by a preponderance of the evidence that those claims are unpatentable.

---

[1] In the Patent Owner Response, Patent Owner indicates that claims 1–5, 8, 9, 11–13, 15–19, and 22–30 "have been statutorily disclaimed under 35 U.S.C. § 253(a)," and are "no longer at issue in this proceeding." PO Resp. 15 (citing Ex. 2004). At oral argument, Patent Owner again acknowledged that claims 1–5, 8, 9, 11–13, 15–19, and 22–30 have been disclaimed. Tr. 13. In its Reply, Petitioner also notes that those claims have been disclaimed "leaving claims 6, 14, and 21 as the only remaining challenged claims." Pet. Reply 1 n.1 (citing Ex. 2004). Exhibit 2004 is titled "Disclaimer in Patent Under 37 CFR 1.321(a)" and indicates that claims 1–5, 8, 9, 11–13, 15–19, and 22–30 have been disclaimed. Ex. 2004, 1. Accordingly, we regard claims 6, 14, and 21 as the only remaining challenged claims in this proceeding.

B. Related Matters

Patent Owner identifies the following matters related to the ’695 patent:

Masimo Corporation v. Apple Inc., Civil Action No. 8:20-cv-00048 (C.D. Cal.) (filed Jan. 9, 2020);

Apple Inc. v. Masimo Corporation, IPR2020-01520 (PTAB Aug. 31, 2020) (challenging claims of U.S. Patent No. 10,258,265 B1);

Apple Inc. v. Masimo Corporation, IPR2020-01521 (PTAB Sept. 2, 2020) (challenging claims of U.S. Patent No. 10,292,628 B1);

Apple Inc. v. Masimo Corporation, IPR2020-01523 (PTAB Aug. 31, 2020) (challenging claims of U.S. Patent No. 8,457,703 B2);

Apple Inc. v. Masimo Corporation, IPR2020-01524 (PTAB Aug. 31, 2020) (challenging claims of U.S. Patent No. 10,433,776 B2);

Apple Inc. v. Masimo Corporation, IPR2020-01526 (PTAB Aug. 31, 2020) (challenging claims of U.S. Patent No. 6,771,994 B2);

Apple Inc. v. Masimo Corporation, IPR2020-01536 (PTAB Aug. 31, 2020) (challenging claims of U.S. Patent No. 10,588,553 B2);

Apple Inc. v. Masimo Corporation, IPR2020-01537 (PTAB Aug. 31, 2020) (challenging claims of U.S. Patent No. 10,588,553 B2);

Apple Inc. v. Masimo Corporation, IPR2020-01538 (PTAB Sept. 2, 2020) (challenging claims of U.S. Patent No. 10,588,554 B2);

Apple Inc. v. Masimo Corporation, IPR2020-01539 (PTAB Sept. 2, 2020) (challenging claims of U.S. Patent No. 10,588,554 B2);

Apple Inc. v. Masimo Corporation, IPR2020-01713 (PTAB Sept. 30, 2020) (challenging claims of U.S. Patent No. 10,624,564 B1);

Apple Inc. v. Masimo Corporation, IPR2020-01714 (PTAB Sept. 30, 2020) (challenging claims of U.S. Patent No. 10,631,765 B1 patent);

Apple Inc. v. Masimo Corporation, IPR2020-01715 (PTAB Sept. 30, 2020) (challenging claims of U.S. Patent No. 10,631,765 B1 patent);

Apple Inc. v. Masimo Corporation, IPR2020-01716 (PTAB Sept. 30, 2020) (challenging claims of U.S. Patent No. 10,702,194 patent);

Apple Inc. v. Masimo Corporation, IPR2020-01723 (PTAB Oct. 2, 2020) (challenging claims of U.S. Patent No. 10,470,695 B2);[2]

Apple Inc. v. Masimo Corporation, IPR2020-01733 (PTAB Sept. 30, 2020) (challenging claims of U.S. Patent No. 10,702,195 B1); and

Apple Inc. v. Masimo Corporation, IPR2020-01737 (PTAB Sept. 30, 2020) (challenging claims of U.S. Patent No. 10,709,366 B1).

Paper 4, 2–3.

Patent Owner also identifies the following pending patent applications that claim priority to, or share a priority claim with, the ’695 patent:

U.S. Patent Application No. 15/195,199;

U.S. Patent Application No. 16/532,061;

U.S. Patent Application No. 16/532,065;

U.S. Patent Application No. 16/791,955;

U.S. Patent Application No. 16/791,963;

U.S. Patent Application No. 16/835,712;

---

[2] Pursuant to the Board’s November 2019, Consolidated Trial Practice Guide, *available at* https://www.uspto.gov/TrialPracticeGuideConsolidated, Petitioner filed a Notice ranking its two petitions that challenge the ’695 patent, ranking first the instant proceeding and ranking second IPR2020-01723. Paper 3, 2. We exercised our discretion to deny institution of *inter partes* review in IPR2020-01723. *See* IPR2020-01723, Paper 8.

U.S. Patent Application No. 16/835,772; and

U.S. Patent Application No. 16/871,874.

Id. at 1–2.

C. The '695 Patent

The '695 patent is titled "Advanced Pulse Oximetry Sensor," and issued on November 12, 2019, from U.S. Patent Application No. 16/226,249, filed December 19, 2018. Ex. 1001, codes (21), (22), (45), (54). The '695 patent summarizes its disclosure as follows:

> This disclosure describes embodiments of non-invasive methods, devices, and systems for measuring blood constituents, analytes, and/or substances such as, by way of non-limiting example, oxygen, carboxyhemoglobin, methemoglobin, total hemoglobin, glucose, proteins, lipids, a percentage therefor (e.g., saturation), pulse rate, perfusion index, oxygen content, total hemoglobin, Oxygen Reserve Index™ (ORI™) or for measuring many other physiologically relevant patient characteristics. These characteristics can relate to, for example, pulse rate, hydration, trending information and analysis, and the like.

Id. at 2:36–46.

Figures 7A and 7B of the ’695 patent are reproduced below:

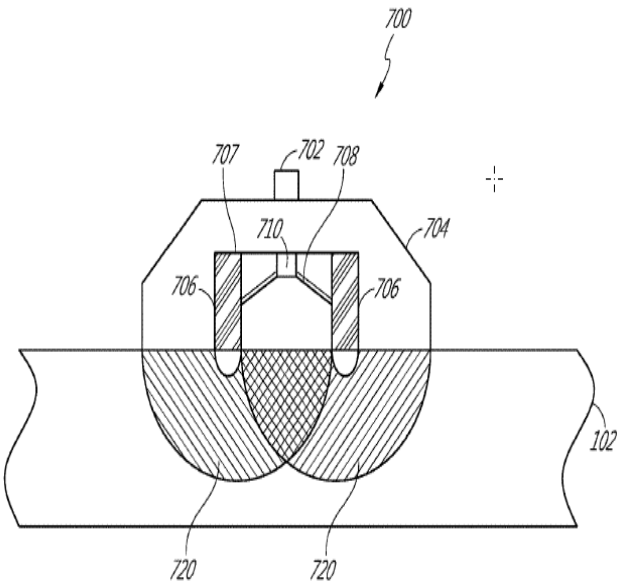

FIG. 7A

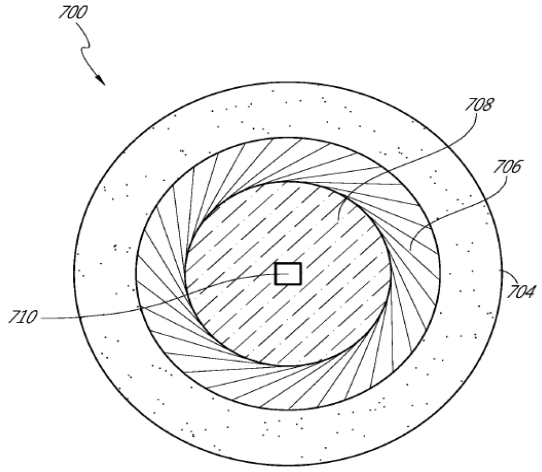

FIG. 7B

Figures 7A and 7B above depict side and top views, respectively, of a three-dimensional pulse oximetry sensor according to an embodiment of the ’695 patent. *Id.* at 5:28–33. Sensor 700 includes emitter 702, light diffuser 704, light block (or blocker) 706, light concentrator 708, and detector 710. *Id.* at 10:49–51. The sensor functions to irradiate tissue measurement site 102, e.g., a patient’s wrist, and detects emitted light that is reflected by the tissue measurement site. *Id.* at 10:43–49. “[L]ight blocker 706 includes an annular ring having cover portion 707 sized and shaped to form a light isolation chamber for the light concentrator 708 and the detector 710.” *Id.* at 11:10–12. “[L]ight blocker 706 and cover 70[7] ensures that the only light detected by the detector 710 is light that is reflected from the tissue measurement site.” *Id.* at 11:16–20.

Figure 8 of the ’695 patent is reproduced below:

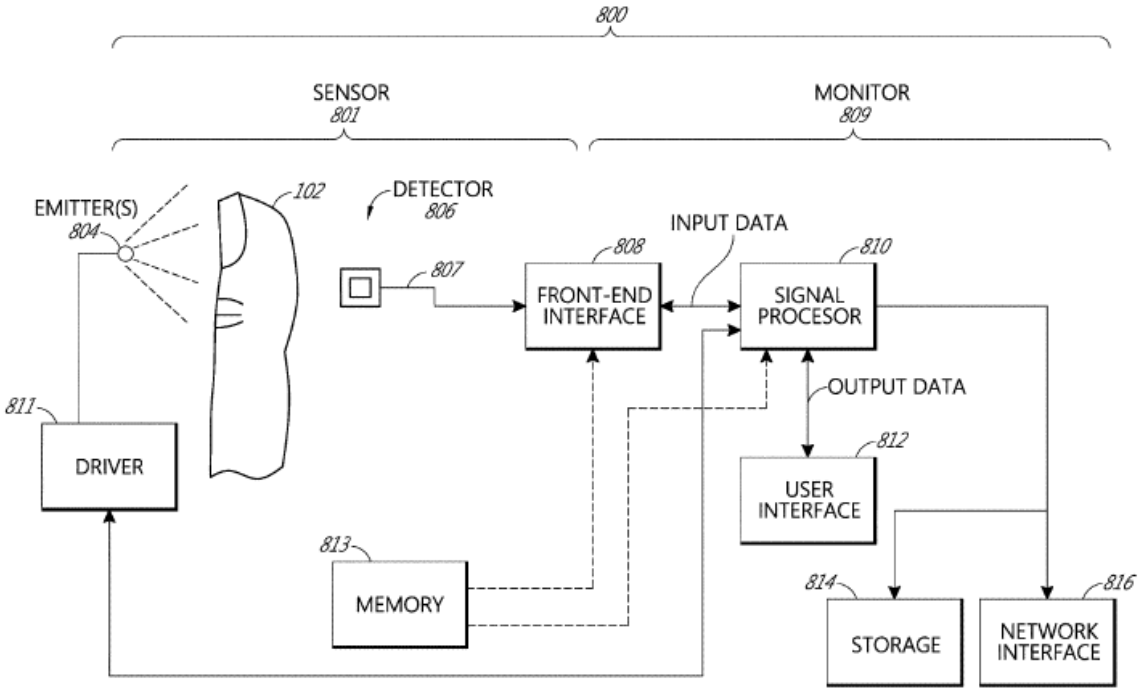

FIG. 8

Figure 8 above illustrates “a block diagram of an example pulse oximetry system capable of noninvasively measuring one or more blood analytes in a monitored patient.” *Id.* at 5:34–36. Pulse oximetry system 800 includes sensor 801 (or multiple sensors) coupled to physiological monitor 809. *Id.* at 12:21–23. Monitor 809 includes “signal processor 810 that includes processing logic that determines measurements for desired analytes based on the signals received from the detector 806” that is a part of sensor 801. *Id.* at 13:37–40. Monitor 809 also includes user interface 812 that provides “an output, e.g., on a display, for presentation to a user of pulse oximetry system 800.” *Id.* at 13:64–66.

D. Illustrative Claim

Claim 6 is illustrative and is reproduced below.[3]

> 1. A wrist-worn physiological monitoring device configured for placement on a user at a tissue measurement site, the device comprising:
>
> a light emission source comprising a plurality of emitters configured to irradiate the tissue measurement site by emitting light towards the tissue measurement site, the tissue measurement site being located on a wrist of the user,
>
> the plurality of emitters configured to emit one or more wavelengths;
>
> a plurality of detectors configured to detect the light emitted by the plurality of emitters after attenuation by a circular portion of the tissue measurement site,
>
> the plurality of detectors further configured to output at least one signal responsive to the detected light;
>
> a processor configured to receive the at least one signal responsive to the output and determine a physiological parameter of the user; and
>
> a light block forming an enclosing wall between the light emission source and the plurality of detectors,
>
> the light block defining the circular portion of the tissue measurement site, the light emission source arranged proximate a first side of the enclosing wall and the plurality of detectors arranged proximate a second side of the enclosing wall, the first side being difference than the second side,
>
> wherein the enclosing wall prevents at least a portion of light emitted from the light emission source from being detected by the plurality of detectors without attenuation by the tissue, and wherein the plurality of detectors are arranged in an array having a spatial configuration corresponding to the circular portion of the tissue measurement site.

Ex. 1001, 15:32–63.

---

[3] Because claim 6 depends from independent claim 1, we also reproduce disclaimed claim 1 for completeness.

> 6. The physiological monitoring device of claim 1, further comprising a diffuser which receives, spreads, and emits the spread light, wherein the emitted spread light is directed at the tissue measurement site.

Id. at 16:16–19.[4]

E. Evidence Relied Upon

Petitioner relies on the following references:

Reference	Publication/Patent Number	Exhibit
Sarantos	U.S. Patent No. 9,392,946 B1 issued July 19, 2016	1014
Mendelson-1991	Mendelson et al., *Skin Reflectance Pulse Oximetry: In Vivo Measurements from the Forearm and Calf*, Journal of Clinical Monitoring Vol. 7 No. 1, pp. 7–12 (January 1991)	1015
Chin	U.S. Patent No. 6,343,223 B1 issued Jan. 29, 2002	1006
Ackermans	WO 2011/051888 A2 published May 5, 2011	1016

Pet. 3–4. Petitioner also relies on the Declaration of Brian W. Anthony, Ph.D. (Ex. 1003). Patent Owner relies on the Declaration of Vijay K. Madisetti, Ph.D. (Ex. 2001).

[4] Claim 14 (which depends from independent claim 9) and claim 21 (which depends from independent claim 19) add a similar "diffuser" limitation as is set forth in claim 6.

F. Asserted Grounds

Petitioner asserts that claims 6, 14, and 21 are unpatentable based upon the following grounds (Pet. 3):[5]

Claims Challenged	35 U.S.C. §	References/Basis
6, 14, 21	103	Sarantos, Mendelson-1991, Chin
6, 14, 21	103	Ackermans, Chin

II. ANALYSIS

A. Claim Construction

For petitions filed on or after November 13, 2018, a claim shall be construed using the same claim construction standard that would be used to construe the claim in a civil action under 35 U.S.C. § 282(b). 37 C.F.R. § 42.100(b) (2019). Both parties submit that no claim term requires express construction. Pet. 5; PO Resp. 14. Based on our analysis of the issues, we conclude that no claim terms require express construction. *Nidec Motor Corp. v. Zhongshan Broad Ocean Motor Co.*, 868 F.3d 1013, 1017 (Fed. Cir. 2017).

B. Principles of Law

A claim is unpatentable under 35 U.S.C. § 103 if "the differences between the subject matter sought to be patented and the prior art are such that the subject matter as a whole would have been obvious at the time the invention was made to a person having ordinary skill in the art to which said subject matter pertains." *KSR Int'l Co. v. Teleflex Inc.*, 550 U.S. 398, 406

[5] As noted by both parties, because of Patent Owner's statutory disclaimer, these are the only claims and grounds that remain at issue in this proceeding. *See* PO Resp. 16; *see generally* Pet. Reply, PO Sur-reply.

(2007). The question of obviousness is resolved on the basis of underlying factual determinations, including (1) the scope and content of the prior art; (2) any differences between the claimed subject matter and the prior art; (3) the level of skill in the art; and (4) objective evidence of non-obviousness.[6] *Graham v. John Deere Co.*, 383 U.S. 1, 17–18 (1966). When evaluating a combination of teachings, we must also "determine whether there was an apparent reason to combine the known elements in the fashion claimed by the patent at issue." *KSR*, 550 U.S. at 418 (citing *In re Kahn*, 441 F.3d 977, 988 (Fed. Cir. 2006)). Whether a combination of prior art elements would have produced a predictable result weighs in the ultimate determination of obviousness. *Id.* at 416–417.

In an *inter partes* review, the petitioner must show with particularity why each challenged claim is unpatentable. *Harmonic Inc. v. Avid Tech., Inc.*, 815 F.3d 1356, 1363 (Fed. Cir. 2016); 37 C.F.R. § 42.104(b). The burden of persuasion never shifts to Patent Owner. *Dynamic Drinkware, LLC v. Nat'l Graphics, Inc.*, 800 F.3d 1375, 1378 (Fed. Cir. 2015).

We analyze the challenges presented in the Petition in accordance with the above-stated principles.

C. Level of Ordinary Skill in the Art

Petitioner identifies the appropriate level of skill in the art as follows:

> The person would have had a Bachelor of Science degree in an academic discipline emphasizing the design of electrical, computer, or software technologies, in combination with training or at least one to two years of related work experience with capture and processing of data or information, including but not limited to physiological monitoring technologies. . . .

[6] Patent Owner does not present objective evidence of non-obviousness.

> Alternatively, the person could have also had a Master of Science degree in a relevant academic discipline with less than a year of related work experience in the same discipline.

Pet. 4–5 (citing Ex. 1003 ¶¶ 17–19).

Patent Owner does not offer its own assessment of the level of ordinary skill. Patent Owner, however, does level a measure of criticism of Petitioner's assessment of the level of skill in the art as not accounting for experience in optics or physiology, and focusing on "data processing and not sensor design." PO Resp. 13. Nevertheless, Patent Owner expresses that it "applies [Petitioner's] asserted level of skill." *Id.* (citing Ex. 2001 ¶¶ 34–36). We determine that the Petitioner's expressed level of ordinary skill in the art is consistent with the '695 patent and the prior art of record. Accordingly, we adopt it in this Decision.

D. Obviousness Over Sarantos, Mendelson-1991, and Chin

Petitioner contends that claims 6, 14, and 21 would have been obvious based on the teachings of Sarantos, Mendelson-1991, and Chin. Pet. 61–63. Patent Owner disagrees and presents several arguments in opposition. PO Resp. 16–42; PO Sur-reply 2–13.

1. Overview of Sarantos

Sarantos is titled "Heart Rate Sensor With High-Aspect-Ratio Photodetector Element." Ex. 1014, code (54). Sarantos describes "[photoplethysmographic (PPG)] sensors designed for use with wearable biometric monitoring devices" and which measure "physiological parameters" of a wearer such as "heart rate" and "blood oxygenation levels." *Id.* at 6:66–7:3, 13:39–47.

Sarantos's Figure 2 is reproduced on the right. Figure 2 illustrates "a wristband-type wearable fitness monitor that incorporates a PPG sensor[.]" *Id.* at 5:55–56. Fitness monitor 200 includes housing 104, back face 128 and light sources 108. *Id.* at 7:12–23. "PPG sensors operate by shining light into a person's skin. This light diffuses through the person's flesh and a portion of this light is then emitted back out of the person's skin in close proximity to where the light was introduced into the flesh." *Id.* at 7:24–28.

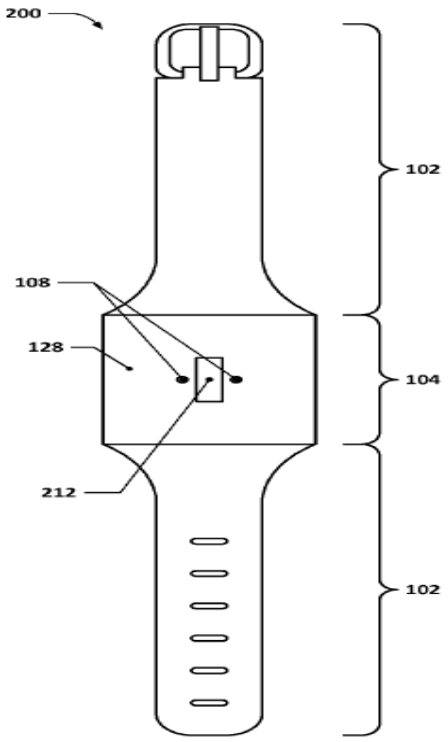

FIG. 2

Sarantos's Figure 18 is reproduced below.

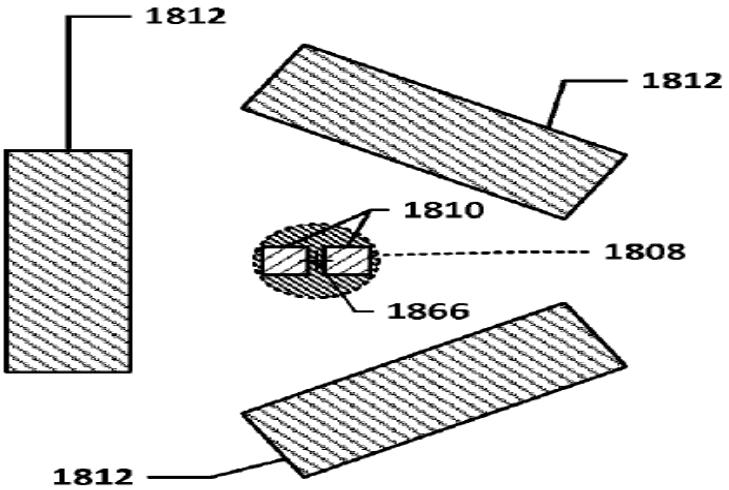

FIG. 18

Figure 18 above illustrates an example of a PPG sensor photodetector layout with multiple light-emitting devices. *Id.* at 6:39–42. Photodetector elements 1812 are characterized as being in a "circular array" centered on

light source 1808, which includes two light-emitting devices 1810. *Id.* at 14:60–62; 15:24–43. Sarantos describes that the PPG sensor

> may also include control logic, which may be communicatively connected with the light source and each photodetector element and configured to cause the light source to emit light, obtain one or more measured light intensity measurements from the one or more photodetector elements, and determine a heart rate measurement based, at least in part, on the one or more light intensity measurements.

Id. at 2:5–12.

Sarantos's Figure 22 is reproduced below:

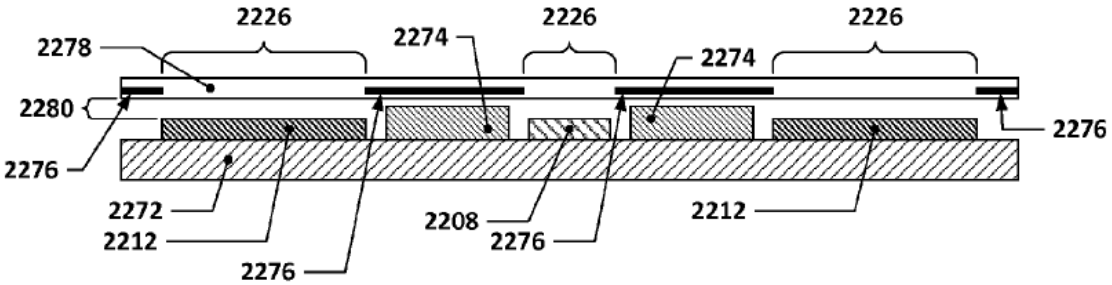

FIG. 22

Figure 22 above depicts another example configuration of a PPG sensor according to Sarantos's invention. *Id.* at 6:52–54. Substrate 2272 supports two high-aspect-ratio (HAR) photodetector elements 2212 positioned on either side of light source 2208. *Id.* at 17:1–3. Window 2278 is offset from substrate 2272. *Id.* at 17:3–4. Sarantos explains the following:

> The window 2278 may be held against a person's skin e.g., by being held in place with a strap, when heart rate measurements are obtained to allow light from the light source 2208 to shine through its associated window region 2226 and into the person's skin, where the light then diffuses into the surrounding flesh and is then emitted back out of the person's skin and into the HAR photodetector elements 2212 through the respective window regions 2226 associated with the HAR photodetector elements 2212.

Id. at 17:16–25.

Sarantos additionally explains the following:

> In order to reduce the chance that light from the light source 2208 will reach either of the HAR photodetector elements 2212 without first being diffused through the person's skin, the light source 2208 may be separated from the HAR photodetector elements 2212 within the PPG sensor by walls 2274, which may extend to the window 2278 or may stop short of the window 2278.

Id. at 17:26–32.

2. Overview of Mendelson-1991

Mendelson-1991 is an article from the Journal of Clinical Monitoring titled "Skin Reflectance Pulse Oximetry: In Vivo Measurements from the Forearm and Calf." Ex. 1015, 1. The article "describe[s] preliminary in vivo evaluation of a new optical reflectance sensor for noninvasive monitoring of SaO_2 with a modified commercial transmittance pulse oximeter." *Id.* at 2.

Mendelson-1991's Figures 1A and 1B are reproduced below:

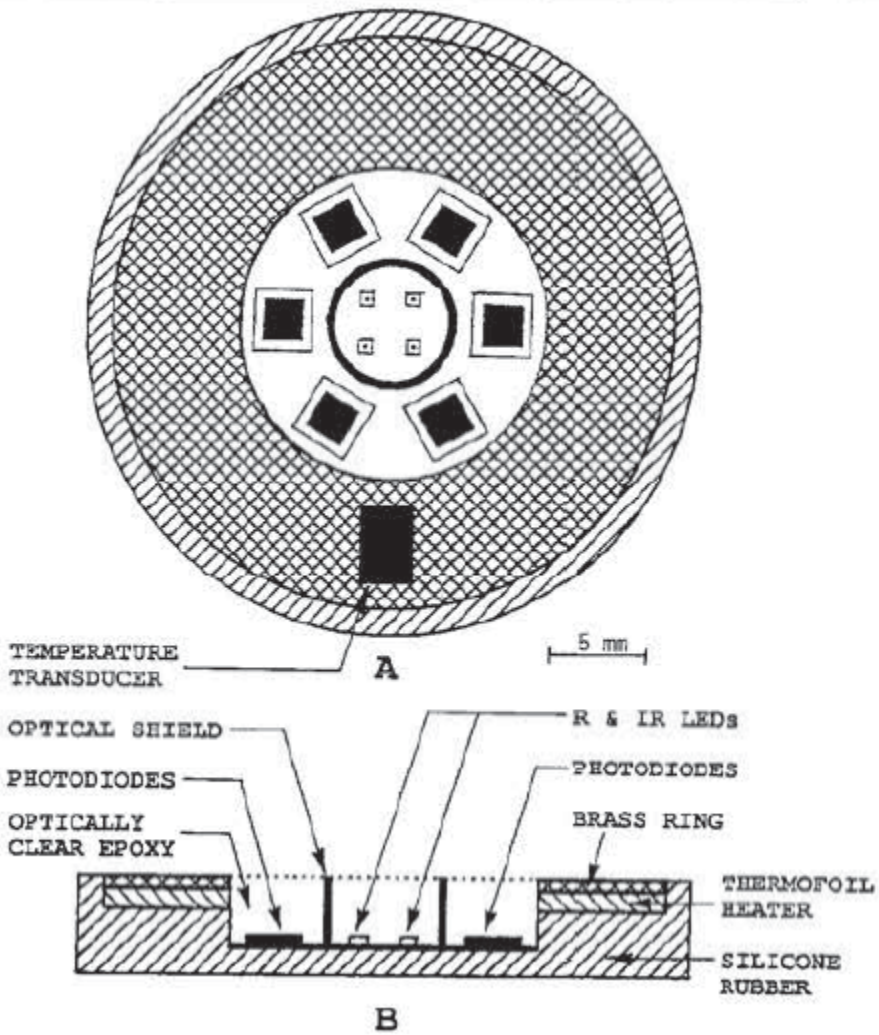

The figures above illustrate "(A) Frontal and (B) side views of the heated skin reflectance pulse oximeter sensor." *Id.* The figures show a pulse oximeter sensor that includes, among other things, multiple "photodiodes," "light-emitting diodes (LEDs)," and an "optical shield." *Id.*

3. Overview of Chin

Chin is titled "Oximeter Sensor with Offset Emitters and Detector and Heating Device." Ex. 1006, code (54). Chin's Figures 7A and 7B are reproduced below:

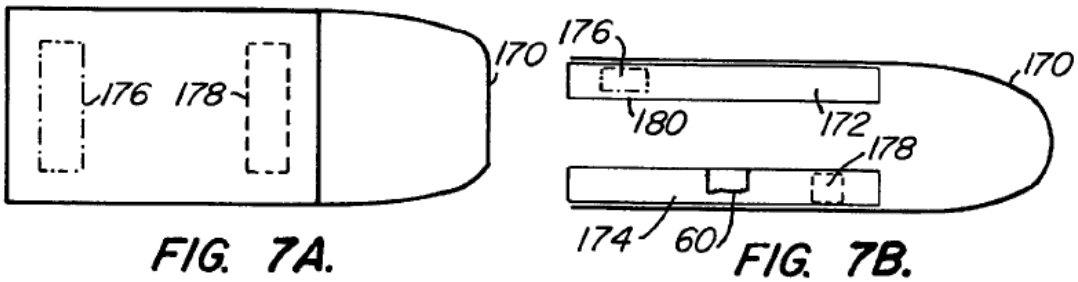

Figures 7A and 7B "are side and top views of a nostril sensor according to the invention." *Id.* at 3:64–65. Chin describes that pads 172 and 174 include emitter 176 and detector 178, respectively. *Id.* at 8:20–25. Chin also explains that the sensor may include "optical diffuser 180 for diffusing the light from emitter 176, which causes a further spreading or mixing of light and may enhance the amount of tissue penetrated in some instances." *Id.* at 8:25–28. Chin additionally explains generally that a diffusing optic causes light emitted from an emitter "to pass through more tissue, and thus more blood." *Id.* at 2:4–7.

Chin further describes that "[t]he sensor could be any type of sensor, such as a durable sensor or a disposable sensor" and "could attach to any body part, such as the earlobe, finger, etc." *Id.* at 5:54–56. Chin additionally describes that its sensor "could be a reflectance or a transmittance sensor." *Id.* at 5:56–57.

4. Discussion

Petitioner provides a detailed assessment as to where all of the limitations required by claims 6, 14, and 21 are found in Sarantos, Mendelson-1991, and Chin. Pet. 7–25, 63. Specifically, Petitioner expresses that all features of claims 6, 14, and 21, with the exception of a

diffuser, are found in Sarantos and Mendelson-1991. Petitioner points to Chin as disclosing a diffuser. Petitioner also explains that a person of ordinary skill in the art would have had adequate reason to combine the teachings of Sarantos, Mendelson-1991, and Chin. *Id.* at 36–38, 63.

Patent Owner does not dispute that all the features of claims 6, 14, and 21 are found in the cited prior art references, but Patent Owner does disagree that Petitioner has established adequate reasoning to combine those references' teachings. PO Resp. 16–33; PO Sur-reply 8–13. A core basis of that disagreement is said to arise from purported differences between "thick tissue" and "thin tissue" of a user's skin, and that such differences preclude combination of sensors that are intended to be applied to those different tissue types. *See, e.g.*, PO Resp. 16–20; PO Sur-reply 9–10.[7] As a result of that alleged tissue thickness dichotomy, according to Patent Owner, a person of ordinary skill in the art would not have combined aspects of a sensor, e.g., a diffuser, used for "thin tissue" as in Chin, with sensors intended for use on a wrist, e.g., the sensors of Sarantos and Mendelson-1991. PO Resp. 21–33; PO Sur-reply 7–13. We have considered all of Patent Owner's arguments, but for the following reasons find them unavailing.

At the outset, we observe that Patent Owner's attempt to establish a distinction between sensors or devices applied to alleged "thin" tissue as opposed to "thick" tissue draws little, if any, support from the prior art evidence of this proceeding. Patent Owner attempts to discount Chin's

[7] We understand that, in Patent Owner's view, "thin tissue" is present at such sites as a user's nostrils and earlobes, whereas "thick tissue" is present, for instance, at a user's wrist. *See, e.g.*, PO Sur-reply 2 ("thin tissue measurement sites (e.g., ear lobe or nostril)"); *id.* at 10 ("thicker tissue sites like the wrist").

teachings as being limited to "sensors worn at thin tissue measurement sites." PO Resp. 17 (citing Ex. 1006, 1:14–21, 8:21–29). Yet, we do not discern that Patent Owner points to any disclosure in Chin that limits its teachings to any particular tissue sites, let alone only sites regarded as "thin." Indeed, Chin does not describe any tissue site to which its sensor is applied as being "thin." Furthermore, the portions of Chin on which Patent Owner relies simply describe a general background of oximeter sensors (Ex. 1006, 1:41–21) and the sensor configuration of one particular embodiment (*id.* at 8:21–29). While Chin characterizes that particular embodiment as directed to a "nostril sensor" (*id.* at 8:20–21), there is no disclosure purporting to restrict Chin's teachings to use with only a user's nostril.

We share Petitioner's view that Patent Owner provides inadequate evidentiary support to make out a case that there is a dichotomy as between "thin tissue" and "thick tissue" pulse oximeters such that they represent distinct classes of sensors whose various aspects and features are uncombinable. Pet. Reply 3–4. We agree with Petitioner that Patent Owner's reliance only on the uncorroborated testimony of Dr. Madisetti is inadequate to establish the proposed dichotomy. *Id.* at 4 (citing PO Resp. 16–20; Ex. 2001 ¶¶ 52–56). Dr. Madisetti points to no adequate evidence or basis to support his conclusions on the matter. We also take note, as does Petitioner (Pet. Reply 5 n.4), that neither Patent Owner nor Dr. Madisetti provides adequate explanation as to how "thick" or "thin" tissues sites are even defined.

Moreover, in our view, Patent Owner neglects to consider the full extent of Chin's teachings. Although Chin associates its embodiment shown in Figures 7A and 7B with a "nostril sensor," Chin's teachings are not

limited strictly to a nostril sensor as the reference unambiguously provides that its sensor can attach "to any body part," and lists, by way of examples, "the earlobe, finger, etc." Ex. 1006, 5:55–56. Although, Patent Owner attempts to discount that disclosure as somehow being limited only to the specific "wiring arrangement" shown in Chin's Figure 2 (*see, e.g.*, PO Sur-reply 4–5), that attempt is ill explained and is not consistent with Chin's plain disclosure that its sensor "could be any type of sensor" and is "attach[ed] to any body part." Ex. 1006, 5:55–56. Patent Owner also admonishes Petitioner for offering "no context" for that disclosure (PO Sur-reply 1), but Chin, itself, provides the context in setting forth that its sensor is not limited to use with any particular body part. There can be no credible argument that a skilled artisan would not readily regard Chin's teachings as extending beyond simply a sensor that is used for a nostril.

We also find unavailing Patent Owner's arguments that one of ordinary skill in the art would somehow regard Chin's teaching of a diffuser as being limited either solely to use with a nostril sensor (*see, e.g.*, Tr. 23:13–17),[8] or only such measurement sites as an "earlobe or nostril" (*see* PO Sur-reply 2). Chin explains generally that use of a diffuser is understood to be beneficial in causing light "to pass through more tissue, and thus more blood." Ex. 1006, 2:4–7. Chin describes that benefit more particularly in the context of the nostril sensor shown in the embodiment of

[8] "[JUDGE]: Yes. Okay. So I've heard what you said but I have a couple of clarifying questions. So are you suggesting that Chin's teachings are limited to applying a diffuser to a nostril sensor? It sounds like you have been and I just wanted to verify.
[COUNSEL]: I definitely am, yes."

Figures 7A and 7B (*id.* at 8:25–29),[9] but there is nothing that suggests that Chin limits the benefits of a diffuser to one particular tissue type (e.g., nostril tissue). We find persuasive Petitioner's view, and the supporting testimony of Dr. Anthony, that a skilled artisan would have recognized from Chin's disclosure that the light spreading benefits of a diffuser provide for a "stronger reflected signal" that facilitates determining measured physiological parameters. Pet. 63 (citing Ex. 1006, 2:4–7, 8:25–29, 9:64–10:7; Ex. 1003 ¶ 99). Patent Owner simply provides no cogent basis to conclude that Chin's diffuser would not function predictably as is disclosed, i.e., spreading light so that it passes through more tissue and blood, when used in conjunction with other types of sensor devices, such as those of Santos and Mendelson-1991. *See KSR,* 550 U.S. 398 at 416 ("The combination of familiar elements according to known methods is likely to be obvious when it does no more than yield predictable results.")

We additionally find unavailing Patent Owner's general argument that a skilled artisan would not have had a reasonable expectation of success in applying a diffuser used in one type of oximeter sensor, such as that in Chin, to other types of oximeter sensors, such as those of Sarantos and Mendelson-1991. *See, e.g.*, PO Resp. 24–25. We do not agree that "Chin fails to disclose any specific way of implement[ing]" its diffuser into a sensor. *See id.* at 24. It clearly does. Chin shows, at least in Figure 7B, a diffuser associated with a nostril sensor. Chin also does not limit its teachings as to a diffuser to any one particular type of sensor, e.g., a nostril sensor. We are

[9] "Also shown is an optional optical diffuser 180 for diffusing the light from emitter 176, which causes a further spreading or mixing of light and may enhance the amount of tissue penetrated in some instances." Ex. 1006, 8:25–29.

not satisfied by Patent Owner's arguments that some structural and operational differences between the sensors of Sarantos and Mendelson-1991 as compared with that of Chin means that a skilled artisan would not have expected success in combining those teachings. *See id.* at 24; *see also id.* at 25–29 (discussing differences between wrist-worn sensors and nostril sensors). A person of ordinary skill in the art is a person of ordinary creativity. *See KSR*, 550 U.S. at 421. It follows readily that a person of ordinary skill and creativity reasonably would have understood how to implement such diffusers in other types of heart rate or pulse oximeter sensors, such as those of Sarantos and Mendelson-1991, in structural configurations necessary to harness the recognized benefits of such diffusers. We credit Dr. Anthony's testimony to that effect. *See, e.g.*, Ex. 1003 ¶¶ 96–101.

Patent Owner's and Dr. Madisetti's opposing views are rooted only in speculation that a skilled artisan would not have appreciated the benefits of a diffuser in other sensors beyond Chin's nostril sensor, which are intended for application to different body parts. *See, e.g.*, PO Resp. 25–29; Ex. 2001 ¶¶ 69–71. Patent Owner and Dr. Madisetti also seemingly attempt to draw distinctions between a wrist-worn "reflectance-type sensor" and a "transmittance-type sensor" for a nostril in connection with use of a diffuser. *See* PO Resp. 25–29; Ex. 2001 ¶¶ 69–71. Yet, those views overly focus on the specific configurations of single embodiments of each of the pertinent references and do not reflect an appropriate obviousness analysis that takes into account the inferences and creatives steps that a skilled artisan would employ. *See KSR*, 550 U.S. at 421 ("[T]he [obviousness] analysis need not seek out precise teachings directed to the specific subject matter of the

challenged claim, for a court can take account of the inferences and creative steps that a person of ordinary skill in the art would employ."). Specifically, those views do not account adequately for Chin's plain disclosure recognizing the general benefits of a diffuser and that its sensor may be attached "to any body part" in the form of either a "reflectance or a transmittance sensor." *See* Ex. 1003, 2:4–7, 5:54–57. From at least that disclosure, a person of ordinary skill and creativity reasonably would have recognized that Chin contemplates various sensor types and that those sensors, including use of a diffuser, may be applied to various body parts of a user. *See, e.g.*, Ex. 1003 ¶¶ 96–101.

We also find unavailing Patent Owner's arguments that there is inadequate reasoning to combine the pertinent prior art because Petitioner's proposed combination involving Chin "would make Sarantos-Mendelson perform worse." PO Resp. 29–32; *see also id.* at 20–21 (discussing "experiments" performed by Dr. Madisetti on certain sensors). Importantly, the obviousness evaluation does not require that the combined teachings of references must produce a device that is somehow superior, or free of disadvantages, as compared with other prior art devices. *See Medichem, S.A. v. Rolabo, S.L.,* 437 F.3d 1157, 1165 (Fed. Cir. 2006) ("[A] given course of action often has simultaneous advantages and disadvantages, and this does not necessarily obviate motivation to combine."); *Winner Int'l Royalty Corp. v. Wang*, 202 F.3d 1340, 1349 n.8 (Fed. Cir. 2000) ("The fact that the motivating benefit comes at the expense of another benefit, however, should not nullify its use as a basis to modify the disclosure of one reference with the teachings of another. Instead, the benefits, both lost and gained, should be weighed against one another."). In this case, even if some

negative or undesirable conditions were to emerge in some circumstances from the use of a diffuser as a part of one type of oximeter sensor, that does not establish the non-obviousness of such a sensor with a diffuser. We find more persuasive Petitioner's view, and Dr. Anthony's supporting testimony, that a skilled artisan would have appreciated that a diffuser provides a benefit in spreading light and providing for it to pass through more tissue irrespective of the particular anatomical location of the tissue. *See* Pet. 61–63; Pet. Reply 3–6, 9–12; Ex. 1003 ¶¶ 96–101.

We also question the significance of the "experiments" performed by Dr. Madisetti as alleged support for the proposition that a diffuser would have "detrimental consequences" if applied to a "reflectance-type" pulse oximeter sensor, presumably such as in Sarantos or Mendelson-1991. *See* PO Resp. 20–21; Ex. 2001 ¶¶ 57–60, Appendix. Evidently, Dr. Madisetti applied diffusers of different diffuser material to one commercially available "reflectance-type" pulse oximeter sensor and conducted experiments to detect light based on the different materials juxtaposed with a sensor without any diffuser material. Left unexplained, however, is the basis to conclude that the commercially available sensor and the particular diffuser materials used somehow should be regarded as constituting the type of sensor that emerges from the combined teachings of Sarantos, Mendelson-1991, and Chin. The record provides considerable doubt in that regard. For instance, as noted by Petitioner (*see* Pet. Reply 6–9), the commercially available sensor used by Dr. Madisetti is one that has only a single detector, whereas the type of sensors involved in the context of the '695 patent and the pertinent prior art are those that include multiple detectors. On its face, that difference appears significant, but is not addressed or accounted for by

Patent Owner or Dr. Madisetti. Neither Patent Owner nor Dr. Madisetti provides any meaningful explanation as to why the outcome of the experiments sheds light on the question of the obviousness of claims 6, 14, and 21 of the '695 patent in view of the particular prior art teachings on which Petitioner relies. We do not find Patent Owner's assertions of non-obviousness based on Dr. Madisetti's experiments to be adequate or particularly probative of the obviousness question.

Lastly, we do not find credible Patent Owner's argument that a skilled artisan lacks motivation to incorporate a diffuser into a "Sarantos-Mendelson[-1991] device" because Sarantos discloses positioning of its detectors in such a way that allegedly already maximizes light receipt by the detector, which would be "negat[ed]" were the device to incorporate a diffuser. PO Resp. 31–32 (citing Ex. 2001 ¶ 74). Neither Patent Owner nor Dr. Madisetti adequately explains why a skilled artisan would have regarded Sarantos's teachings as being limited solely to a singular light spreading pattern that effectively precludes any modification that alters the pattern. Indeed, we agree with Petitioner that it simply does not follow from the teachings of the prior art, specifically Chin, that a diffuser applied to a different device such as that arising from the Sarantos and Mendelson-1991 combination, would have some sort of negating effect that would disrupt operation of the device. *See* Pet. Reply 12. Rather, it follows from the evidence of record that a skilled artisan would have recognized that a diffuser provides for light to be desirably "further spread[]" to pass, in some instances, through more tissue and more blood. *See* Pet. Reply 12; Ex. 1006 2:4–9, 8:25–29; Ex. 1003 ¶¶ 96–101. We credit Dr. Anthony's testimony in that respect over the contrary testimony of Dr. Madisetti (*see, e.g.*, Ex. 2001

¶ 74), as we conclude that Dr. Anthony's testimony is more consistent with the teachings of the prior art of record.

5. Summary

We have considered the final record before us including the respective briefings of the parties, and the underlying evidence offered in support thereof. Based on this record, we conclude that Petitioner has shown by a preponderance of the evidence that claims 6, 14, and 21 would have been obvious in view of the combined teachings of Sarantos, Mendelson-1991, and Chin. *See* Pet. 61–63.

E. Obviousness Over Ackermans and Chen

Petitioner also contends that claims 6, 14, and 21 are unpatentable based on the combined teachings of Ackermans and Chin. Pet. 102–106 (citing Ex. 1003 ¶¶ 160–163, 167–168). Patent Owner disagrees. PO Response 34–43; PO Sur-reply 13–16.

1. Overview of Ackermans

Ackermans is titled "Medical Optical Sensor." Ex. 1016, code (54). Ackermans characterizes its invention as relating to the measurement of blood oxygenation level using optical sensors. *Id.* at 1:2–5. Ackermans's Figure 1 is reproduced below:

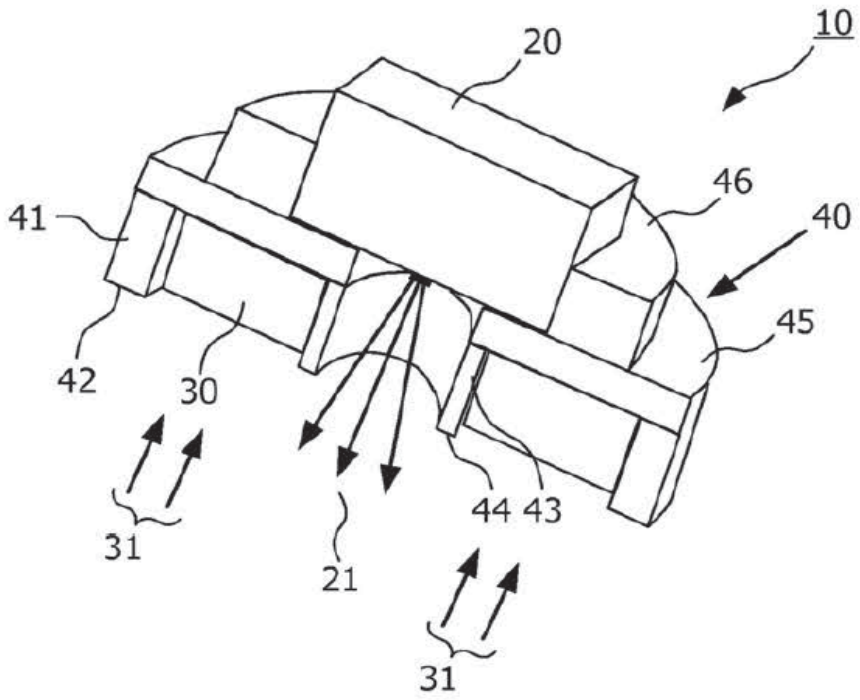

FIG. 1

Figure 1 shows a three-dimensional sectional schematic drawing of an embodiment of a medical optical sensor. *Id.* at 4:5–6. Medical optical sensor 10 "is designed to be attached to the skin with at least the rims 42 and 44 touching the skin." *Id.* at 4:33–34. The medical optical sensor includes light emitter 20 for emitting light 21 and photodetector 30 for detecting reflected light 31 from a user's skin. *Id.* at 4:22–24.

2. Discussion

Petitioner presents Ackermans's teachings as effectively equivalent to the combined teachings of Sarantos and Mendelson-1991. As with the grounds based on Sarantos and Mendelson-1991, Petitioner contends that Ackermans discloses all the features required by claims 6, 14, and 21 with the exception of a diffuser. Petitioner relies on Chin for disclosure of a

diffuser. Patent Owner does not dispute that all the features required by claims 6, 14, and 21 are present in the combined teachings of Ackerman and Chin, but Patent Owner does disagree that Petitioner has established adequate reasoning to combine those references' teachings.

Patent Owner offers arguments to Petitioner's proposed ground based on Ackermans and Chin that essentially mirror those that were offered for the ground based on Sarantos, Mendelson-1991, and Chin. *See* PO Resp. 34–43; PO Sur-reply 13–16. For instance, Patent Owner contends the following: (1) Ackerman discloses a wrist-worn sensor applied to "thick tissue" whereas Chin is limited to a nostril sensor applied to "thin tissue" (*see, e.g.*, PO Resp. 34–35); (2) Petitioner has not explained how Chin's teachings of a diffuser would improve Ackerman's sensor (*see, e.g., id.* at 34–36); (3) Petitioner has not established that a person of ordinary skill in the art would have had a reasonable expectation of success in combining the teachings of Ackermans and Chin (*see, e.g., id.* at 36–37); (4) Petitioner has not accounted for the differences between a wrist-worn sensor and a nostril-based sensor (*see, e.g., id.* at 38–40); (5) combining Chin's diffuser with Ackerman's sensor "would make Ackermans' device perform worse" (*see, e.g., id.* at 40–41); and (6) Ackerman's device already spreads light and that adding a diffuser would "negate[]" that light spreading (*see, e.g., id.* at 41–42).

We conclude that our reasoning presented above in connection with the combination of Sarantos, Mendelson-1991 and Chin also applies to the combination based on Ackermans and Chin. *See supra* § II.D.4. For all of those reasons, we also find Patent Owner's arguments unavailing in the context of the Ackermans and Chin combination.

We determine that Petitioner has shown by a preponderance of the evidence that claim 6, 14, and 21 of the '695 patent are unpatentable based on the combined teachings of Ackermans and Chin. *See* Pet. 102–106.

III. CONCLUSION

In summary, we determine that a preponderance of the evidence establishes that claims 6, 14, and 21 of the '695 patent are unpatentable, as shown in the following table:[10]

Claim(s)	35 U.S.C. §	References/Basis	Claims Shown Unpatentable	Claims Not Shown Unpatentable
6, 14, 21	103	Sarantos, Mendelson-1991, Chin	6, 14, 21	
6, 14, 21	103	Ackermans, Chin	6, 14, 21	
Overall Outcome			6, 14, 21	

[10] Should Patent Owner wish to pursue amendment of the challenged claims in a reissue or reexamination proceeding subsequent to the issuance of this decision, we draw Patent Owner's attention to the April 2019 *Notice Regarding Options for Amendments by Patent Owner Through Reissue or Reexamination During a Pending AIA Trial Proceeding*. *See* 84 Fed. Reg. 16,654 (Apr. 22, 2019). If Patent Owner chooses to file a reissue application or a request for reexamination of the challenged patent, we remind Patent Owner of its continuing obligation to notify the Board of any such related matters in updated mandatory notices. *See* 37 C.F.R. §§ 42.8(a)(3), (b)(2).

IV. ORDER

Upon consideration of the record before us, it is:

ORDERED that claims 6, 14, and 21 of the ’695 patent have been shown to be unpatentable; and

FURTHER ORDERED that, because this is a final written decision, parties to the proceeding seeking judicial review of the decision must comply with the notice and service requirements of 37 C.F.R. § 90.2.

For PETITIONER:

Walter Renner
Dan Smith
Kenneth Hoover
FISH & RICHARDSON P.C.
axf-ptab@fr.com
dsmith@fr.com
hoover@fr.com

For PATENT OWNER:

John M. Grover
Joseph Re
Stephen Larson
Shannon Lam
Jarom Kesler
Ben Katzenellenbogen
KNOBBE, MARTENS, OLSON, & BEAR, LLP
2jmg@knobbe.com
2jrr@knobbe.com
2swl@knobbe.com
2sxl@knobbe.com
2jzk@knobbe.com
2bak@knobbe.com