IN THE UNITED STATES PATENT AND TRADEMARK OFFICE

In re Patent of:	Ammar Al-Ali	
U.S. Patent No.:	10,687,745	Attorney Docket No.: 50095-0045IP4
Issue Date:	June 23, 2020	
Appl. Serial No.:	16/835,772	
Filing Date:	March 31, 2020	
Title:	PHYSIOLOGICAL MONITORING DEVICES, SYSTEMS, AND METHODS	

Mail Stop Patent Board
Patent Trial and Appeal Board
U.S. Patent and Trademark Office
P.O. Box 1450
Alexandria, VA 22313-1450

PETITION FOR *INTER PARTES* REVIEW OF UNITED STATES PATENT NO. 10,687,745 PURSUANT TO 35 U.S.C. §§ 311–319, 37 C.F.R. § 42

TABLE OF CONTENTS

I. REQUIREMENTS FOR IPR UNDER 37 C.F.R. § 42.104 1
A. Standing 1
B. Challenge and Relief Requested 1

II. SUMMARY OF THE '745 PATENT 2
A. Brief Description 2
B. Summary of the Prosecution History 3
C. Level of Ordinary Skill in the Art 5

III. CLAIM CONSTRUCTION UNDER 37 C.F.R. §§ 42.104(b)(3) 6

IV. THE CHALLENGED CLAIMS ARE UNPATENTABLE 6
A. Ground 1A: Claims 2, 5-6, 8, 10-12, 17, and 19 are obvious over Ackermans in view of Savant 6
1. Overview of Ackermans 6
2. Overview of Savant 9
3. The combination of Ackermans and Savant 10
4. Reasons to combine Ackermans and Savant 10
5. Analysis 12
B. Ground 1B: Claims 3-4 and 21-26 are obvious over Ackermans and Savant in view of Venkatraman 38
1. Overview of Venkatraman 38
2. The combination of Ackermans, Savant, and Venkatraman 39
3. Reasons to combine Ackermans, Savant, and Venkatraman 40
4. Analysis 42
C. Ground 1C: Claims 13-14 are obvious over Ackermans in view of Savant and Sarantos 52
1. Overview of Sarantos 52
2. The combination of Ackermans, Savant, and Sarantos 53
3. Reasons to combine Ackermans, Savant, and Sarantos 58
4. Analysis 60

V. PTAB DISCRETION SHOULD NOT PRECLUDE INSTITUTION 63
A. 314(a) – *Fintiv* 63
B. 314(a) – *General Plastic* 65
C. 325(d) – *Advanced Bionics* 67

VI. MANDATORY NOTICES UNDER 37 C.F.R. §42.8 70
A. Real Parties-In-Interest Under 37 C.F.R. §42.8(b)(1) 70
B. Related Matters Under 37 C.F.R. §42.8(b)(2) 70

MASIMO 2034
Apple v. Masimo
IPR2024-00241

C. Lead And Back-Up Counsel Under 37 C.F.R. §42.8(b)(3).....71
D. Service Information 71

VII. PAYMENT OF FEES – 37 C.F.R. §42.103.....72

VIII. CONCLUSION.....72

MASIMO 2034
Apple v. Masimo
IPR2024-00241

EXHIBITS

APPLE-1001	U.S. Pat. No. 10,687,745 to Al-Ali ("the '745 Patent")
APPLE-1002	Prosecution History of the '745 Patent (Serial No. 16/835,772)
APPLE-1003	Declaration of Dr. Brian Anthony
APPLE-1004	U.S. Pat. No. 8,670,819 ("Iwamiya")
APPLE-1005	U.S. Pat. No. 9,392,946 ("Sarantos")
APPLE-1006	U.S. Pub. No. 2014/0275854 ("Venkatraman")
APPLE-1007	U.S. Pat. No. 6,483,976 ("Shie")
APPLE-1008	U.S. Pat. No. 6,801,799 ("Mendelson-799")
APPLE-1009	U.S. Pub. No. 2015/0018647 ("Mandel")
APPLE-1010	U.S. Pub. No. 2009/0275810 ("Ayers")
APPLE-1011	Int'l. Pub. No. WO 2011/051888 ("Ackermans")
APPLE-1012	U.S. Pat. No. 6,158,245 ("Savant")
APPLE-1013	Design of Pulse Oximeters, J.G. Webster; Institution of Physics Publishing, 1997 ("Webster")
APPLE-1014	U.S. Pub. No. 2009/0054112 ("Cybart")
APPLE-1015	U.S. Pat. No. 5,893,364 ("Haar")
APPLE-1016	U.S. Pat. No. 5,952,084 ("Anderson")

MASIMO 2034
Apple v. Masimo
IPR2024-00241

APPLE-1017 U.S. Pat. No. 10,470,695 (the "'695 patent")

APPLE-1018 *Apple v. Masimo*, Case No. IPR2020-01722, Paper 29 (Final Written Decision) (PTAB May 5, 2022) (the "'695 FWD")

APPLE-1019 – APPLE-1030 RESERVED

APPLE-1031 *Masimo Corporation, et al. v. Apple Inc*., Redacted Complaint, ITC Inv. No. 337-TA-1276

APPLE-1032 *Interim Procedure for Discretionary Denials in AIA Post-Grant Proceedings with Parallel District Court Litigation*, issued June 21, 2022 ("Interim Guidance")

MASIMO 2034
Apple v. Masimo
IPR2024-00241

Apple Inc. ("Petitioner" or "Apple") petitions for *Inter Partes* Review ("IPR") of claims 2-6, 8, 10-14, 17, 19, and 21-26 ("the Challenged Claims") of U.S. Patent 10,687,745 ("the '745 Patent"). Compelling evidence presented in this Petition demonstrates at least a reasonable likelihood that Apple will prevail with respect to at least one of the Challenged Claims. Accordingly, Apple respectfully requests institution of IPR and cancellation of all Challenged Claims as unpatentable.

I. REQUIREMENTS FOR IPR UNDER 37 C.F.R. § 42.104

A. Standing

Apple certifies that the '745 Patent is available for IPR. Apple is not barred or estopped from requesting this review challenging the Challenged Claims on the below-identified grounds.

B. Challenge and Relief Requested

Apple requests IPR of the Challenged Claims on the grounds set forth in the table below. Additional explanation and support for each ground is set forth in the expert Declaration of Brian Anthony, Ph.D. (APPLE-1003), referenced throughout this Petition.

MASIMO 2034
Apple v. Masimo
IPR2024-00241

Ground	Claims	Basis for Rejection (35 U.S.C. § 103)
1A	2, 5-6, 8, 10-12, 17, 19	§103 over Ackermans and Savant
1B	3-4, 21-26	§103 over Ackermans, Savant, and Venkatraman
1C	13-14	§103 over Ackermans, Savant, and Sarantos

The ’745 Patent claims priority to an application filed July 2, 2015, which Petitioner treats as the earliest effective filing date (“Critical Date”) of the Challenged Claims for purposes of this IPR. Each of the prior art references applied in the Grounds listed above qualifies as prior art to the ’745 Patent on at least the bases shown below:

Reference	Date	35 U.S.C. §102 Prior Art Basis
Ackermans	5/5/2011 (published)	102(a)(1), (a)(2)
Savant	12/12/2000 (issued)	102(a)(1), (a)(2)
Venkatraman	4/7/2015 (issued)	102(a)(1), (a)(2)
Sarantos	5/28/2015 (filed)	102(a)(2)

II. SUMMARY OF THE ’745 PATENT

A. Brief Description

The ’745 Patent, entitled “Advanced Pulse Oximetry Sensor,” describes a “non-invasive, optical-based physiological monitoring system….” APPLE-1001, Face, Abstract.

MASIMO 2034
Apple v. Masimo
IPR2024-00241

B. Summary of the Prosecution History

Masimo filed the application that issued as the '745 Patent (16/835,772) ("'772 Application") with a request for accelerated examination on March 30, 2020, approximately three months after Masimo initiated its serial litigation campaign against Apple through its January 9, 2020 complaint in the U.S. District Court for the Central District of California (CDCA) (Case No. 8:20-cv-00048), and approximately seven months after Apple filed IPRs challenging claims of related U.S. Patent No. 10,470,695 ("'695 Patent").[1]

On May 4, 2020, only five weeks after Masimo filed the '772 Application, and without having issued a single rejection, the examiner issued a notice of allowance. APPLE-1002, 147-153. Notably absent from that notice was any discussion whatsoever of art applied in Apple's IPRs, including art on which the present Petition's grounds are premised. *Id.*

Also notable is the fact that, in a final written decision issued May 5, 2022, the Board went on to invalidate every challenged claim of the '695 Patent based on art applied in Apple's IPRs. *Apple Inc. v. Masimo Corp.*, IPR2020-01722 Pap. 29,

---

[1] *See*, *generally*, IPR2020-01722, -01723. The '772 Application claimed priority to the application from which the '695 Patent issued (16/226,249), and incorporated that application by reference. APPLE-1001, 1:4-20

MASIMO 2034
Apple v. Masimo
IPR2024-00241

2 (PTAB May 5, 2022) (finding "claims 6, 14, and 21 of the '695 patent…unpatentable" based on grounds including Ackermans, Sarantos, Mendelson-1991, and Chin).

There is no indication in the '745 Patent's file history that the examiner substantively considered any of the prior art applied in this Petition prior to allowing the '772 Application. Instead, the notice of allowance limits its discussion to U.S. Patent Pub. No. 2014/0361147 ("Fei") and U.S. Patent No. 5,830,137 ("Scharf"). APPLE-1002, 147-153.

The references and grounds of rejection applied in this Petition are materially different from those addressed by the examiner during prosecution. Further, this Petition compellingly demonstrates the obviousness of the Challenged Claims, including the claim features relied upon by the examiner in issuing the notice of allowance.

For example, all Challenged Claims depend from a claim that recites some form of the following limitation: a "material configured to change the first shape into a second shape by which the light emitted from one or more of the plurality of light-emitting diodes is projected towards the tissue" or "a light diffusing material configured to be positioned between the plurality of light-emitting diodes and a tissue measurement site on the wrist of the user when the physiological monitoring device is in use." *See, e.g.,* APPLE-1001, Claims 1, 15. The '745 specification

MASIMO 2034
Apple v. Masimo
IPR2024-00241

makes clear that these limitations describe a diffuser. *See, e.g., id*., 3:5-15. In Apple's prior IPR of Masimo's '695 patent (of which the '745 Patent is a continuation), the Board invalidated as obvious a claim reciting the addition of "***a diffuser*** which receives, spreads, and emits the spread light, wherein the emitted spread light is directed at the tissue measurement site" to a "physiological monitoring device" nearly identical to that recited in the Challenged Claims. *See, e.g.,* APPLE-1017, claim 6; APPLE-1018, 21-30 (final written decision finding above claim of the '695 patent obvious over multiple combinations of art, including one based on the Ackermans reference).[2]

C. Level of Ordinary Skill in the Art

A person of ordinary skill in the art relating to, and at the time of, the invention of the '745 Patent ("POSITA") would have been a person with a working knowledge of physiological monitoring technologies. The person would have had a Bachelor of Science degree in an academic discipline emphasizing the design of electrical, computer, or software technologies, in combination with training or at least one to two years of related work experience with capture and processing of data or information, including but not limited to physiological monitoring technologies. APPLE-1003, ¶¶18-20. Alternatively, the person could have also had

[2] All emphasis added unless otherwise indicated.

MASIMO 2034
Apple v. Masimo
IPR2024-00241

a Master of Science degree in a relevant academic discipline with less than a year of related work experience in the same discipline. Id.

III. CLAIM CONSTRUCTION UNDER 37 C.F.R. §§ 42.104(b)(3)

Petitioner submits that all claim terms should be construed according to the Phillips standard. *Phillips v. AWH Corp.*, 415 F.3d 1303 (Fed. Cir. 2005); 37 C.F.R. § 42.100. Here, based on the evidence below and the prior art's description of the claimed elements being similar to that of the '745 Patent specification, no formal claim constructions are necessary in this proceeding because "claim terms need only be construed to the extent necessary to resolve the controversy." *Wellman, Inc. v. Eastman Chem. Co.*, 642 F.3d 1355, 1361 (Fed. Cir. 2011). APPLE-1003, ¶21.

Furthermore, Apple is not conceding that each challenged feature satisfies all statutory requirements such as 35 U.S.C. § 112. As this is an IPR petition, Apple is pursuing prior art-based grounds. Apple is not waiving any arguments concerning other grounds that can only be raised in district court.

IV. THE CHALLENGED CLAIMS ARE UNPATENTABLE

A. Ground 1A: Claims 2, 5-6, 8, 10-12, 17, and 19 are obvious over Ackermans in view of Savant

1. Overview of Ackermans

Ackermans describes an optical sensor 10 for measuring the blood oxygenation levels of a user. APPLE-1011, Abstract, 1, 2-5. As shown in FIGS. 1

MASIMO 2034
Apple v. Masimo
IPR2024-00241

and 2 below, the optical sensor 10 includes "at least one light emitter (20) for emitting light (21) directed to a part of the skin (50) of a patient and at least one photo-detector (30) for detecting light (31) reflected from the skin (50). A housing (40) for carrying the at least one light emitter (20) and the at least one photo-detector (30) is provided, where the housing (40) has a contact area with the skin (50)." APPLE-1011, Abstract, 4:22-25.

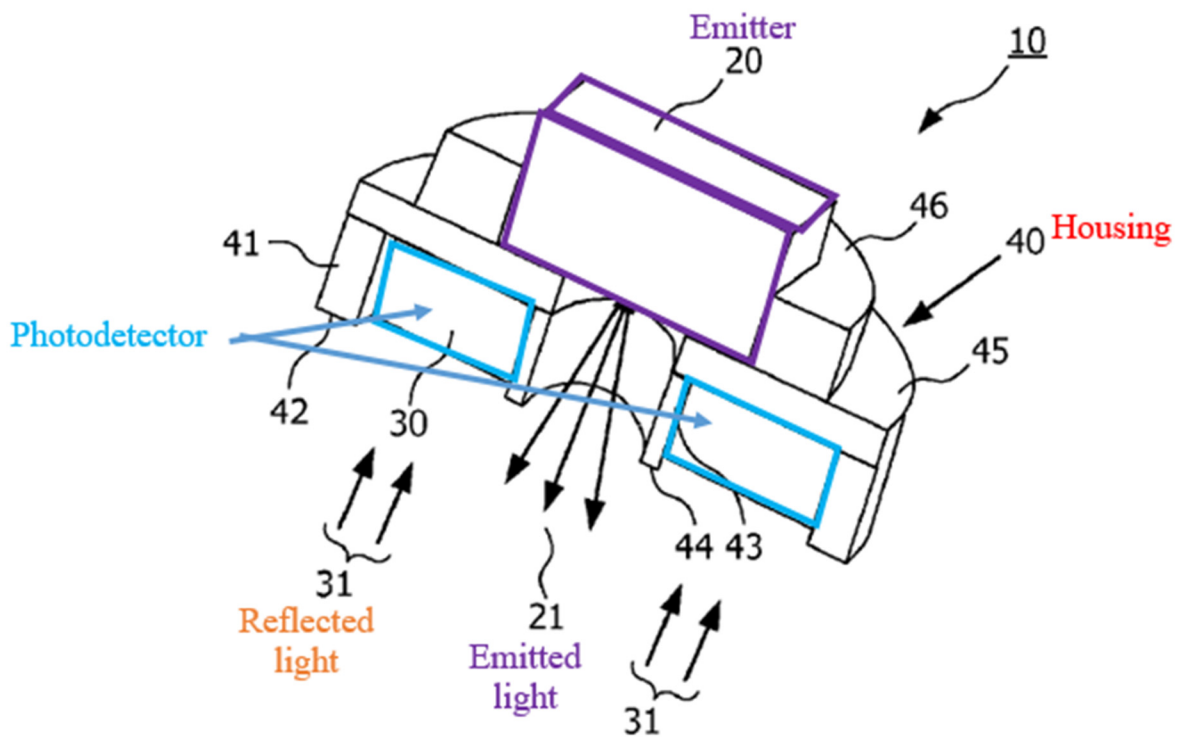

APPLE-1011, FIG. 1 (annotated)

MASIMO 2034
Apple v. Masimo
IPR2024-00241

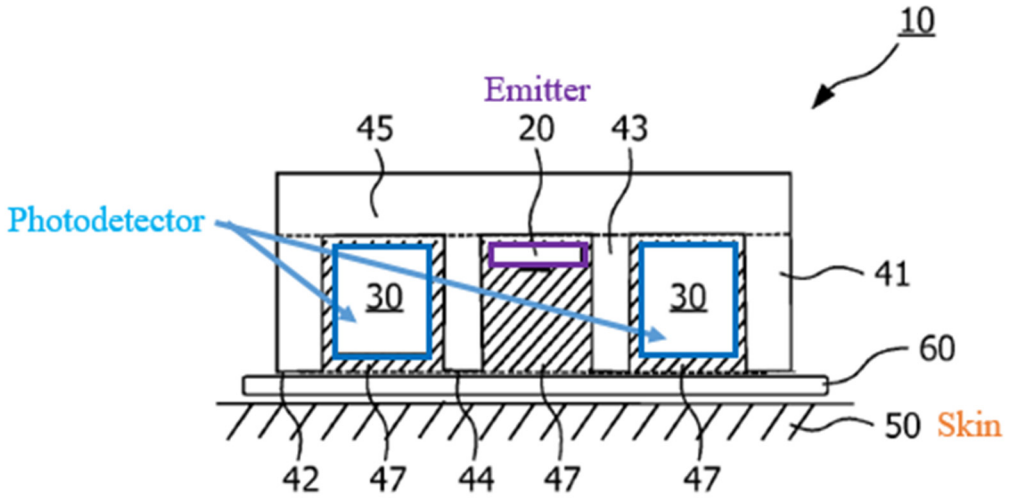

APPLE-1011, FIG. 2 (annotated)

In the example shown in FIG. 7, Ackermans' optical sensor 10 is implemented within a wristwatch for placement on a user at a tissue measurement site. APPLE-1011, 10:29-35.

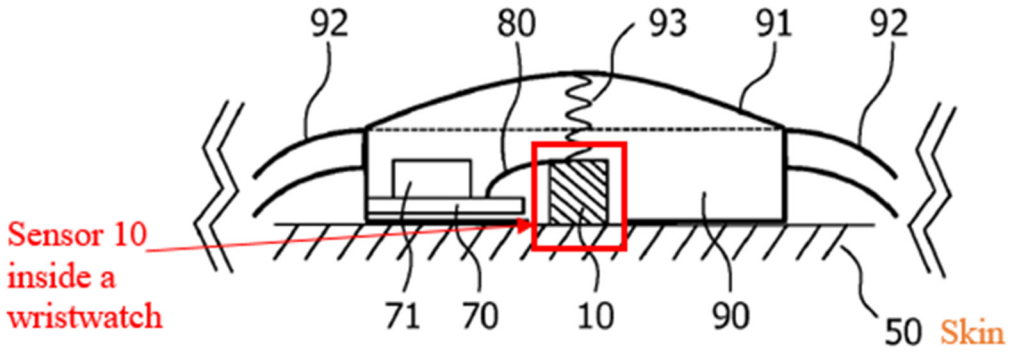

FIG. 7

APPLE-1011, FIG. 7 (annotated)

The frame 90 of the wristwatch is attachable to the skin 50 of a patient with an elastic band. APPLE-1011, 10:29-35. The "optical sensor 10 is positioned at

MASIMO 2034
Apple v. Masimo
IPR2024-00241

the center of the frame" 90. *Id*. Sensor 10 can be used to obtain physiological measurements such as blood oxygen levels (e.g., arterial oxygen saturation levels) and heart rates. APPLE-1011, 6:15-18, 1:8-18, 13:10-12 (claim 6). "Electrical signals from the at least one photo-detector are processed [by electrical elements] in order to determine an oximetry value." *Id.*, 3:10-12, 8:25-9:2, 10:3-10; APPLE-1003, ¶¶22-24.

2. Overview of Savant

Savant, titled "High Efficiency Monolithic Glass Light Shaping Diffuser and Method of Making," describes a "light shaping diffuser (LSD)" which "is a type of diffuser used in a variety of illuminating, imaging, and light projecting applications." APPLE-1012, 1:16-19. "A LSD is a transparent or translucent structure having an entrance surface, an exit surface, and light shaping structures formed on its entrance surface and/or in its interior." *Id*., 1:19-22. The "light shaping structures diffract light passing through the LSD so that the beam of light emitted from the LSD's exit surface exhibits a precisely controlled energy distribution along horizontal and vertical axes." *Id*., 1:30-33. Savant describes that "LSDs can be used to ***shape a light beam*** so that over 90% (and up to 95%-98%) of the light beam entering the LSD is directed towards and into contact with a target located downstream of the LSD." *Id*., 1:34-37. "A LSD can be made to collect incoming light and either (1) distribute it over a circular area from a

MASIMO 2034
Apple v. Masimo
IPR2024-00241

fraction of a degree to over 100°, or (2) send it into an almost unlimited range of elliptical angles." *Id*., 1:37-40. Savant describes that LSDs "exhibit a high degree of versatility because they may be employed with light from almost any source, including LEDs, daylight, a tungsten halogen lamp, or an arc lamp." *Id*., 1:49-51. LSD's can also be used to "control the angular spread of transmitted light." *Id*., 6:16-17; APPLE-1003, ¶25.

3. The combination of Ackermans and Savant

In the combination, the optical sensor 10 of Ackermans is modified to incorporate a light-shaping diffuser, such as those taught by Savant, between its emitters and the tissue measurement site. APPLE-1011, Abstract, 4:22-25, FIG. 1; APPLE-1012, 1:16-51, 6:16-17; APPLE-1003, ¶29.

4. Reasons to combine Ackermans and Savant

A POSITA would have been motivated and found it obvious to modify Ackermans to incorporate a light-shaping diffuser, such as those taught by Savant, between its emitters and the tissue measurement site in order to more precisely control the distribution of light from the emitters across the tissue measurement site. APPLE-1003, ¶¶30-33. As described by Savant, a light-shaping diffuser provides precise control over the shape of the exiting light. APPLE-1012, 1:37-40 (a light-shaping diffuser "can be made to collect incoming light and either (1) distribute it over a circular area from a fraction of a degree to over 100°, or (2)

MASIMO 2034
Apple v. Masimo
IPR2024-00241

send it into an almost unlimited range of elliptical angles"). Such precise control would allow Ackermans' device to be calibrated to increase the amount of reflected light received by the photodiodes by precisely controlling the area of the tissue site being illuminated, thereby leading to more received light and a higher signal-to-noise ratio. APPLE-1011, Abstract, 4:22-25, FIG. 1; APPLE-1012, 1:16-51, 6:16-17; APPLE-1003, ¶30. Use of a light-shaping diffuser would also enable different spatial configurations of photodiodes to be utilized in the optical sensor by allowing the distribution of light to be modified based on the specific diffuser chosen. *See id.*

Further, a POSITA would have found it obvious to modify Ackermans based on Savant's teachings because doing so entails the use of known solutions to improve similar systems and methods in the same way. APPLE-1003, ¶31. Here, "when a patent 'simply arranges old elements with each performing the same function it had been known to perform' and yields no more than one would expect from such an arrangement, the combination is obvious." *KSR Int'l Co. v. Teleflex Inc.*, 550 U.S. 398, 417 (2007). A POSITA would have recognized that applying Savant's teachings to augment Ackermans would have led to predictable results without significantly altering or hindering the functions performed by Ackermans' system. APPLE-1003, ¶31.

In fact, a POSITA would have been motivated to incorporate the well-

MASIMO 2034
Apple v. Masimo
IPR2024-00241

known techniques of Savant into Ackermans to achieve the predictable benefits described in Savant. APPLE-1003, ¶32; *see, e.g.,* APPLE-1012, 1:16-51, 6:16-17. Indeed, a POSITA would have had a reasonable expectation of success incorporating Savant's teachings into Ackermans, because Savant teaches that light-shaping diffusers are widely applicable to "almost any [light] source, including LEDs." *See* APPLE-1012, 1:49-51; APPLE-1003, ¶32.

Accordingly, for at least these reasons, augmenting Ackermans' device based on the teachings of Savant would have been routine and straightforward to a POSITA, and it would have been clear that such a combination would predictably work and provide the expected results. APPLE-1003, ¶33.

5. Analysis

(a) Claim 1

[1.0] A physiological monitoring device comprising:

Ackermans describes an optical sensor 10 for measuring the blood oxygenation levels of a user. APPLE-1011, Abstract, 1, 2-5. As shown in FIGS. 1 and 2 below, the optical sensor 10 includes "at least one light emitter (20) for emitting light (21) directed to a part of the skin (50) of a patient and at least one photo-detector (30) for detecting light (31) reflected from the skin (50). A housing (40) for carrying the at least one light emitter (20) and the at least one photo-detector (30) is provided, where the housing (40) has a contact area with the skin (50)." APPLE-1011, Abstract, 4:22-25; APPLE-1003, ¶34.

MASIMO 2034
Apple v. Masimo
IPR2024-00241

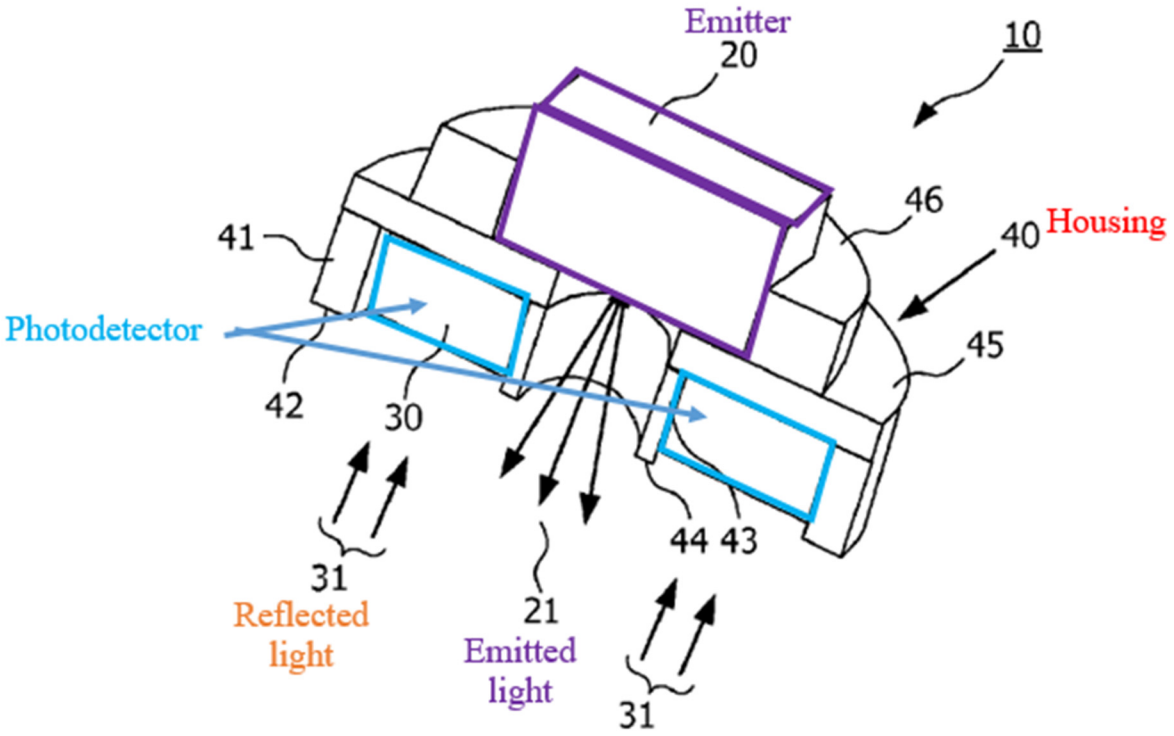

APPLE-1011, FIG. 1 (annotated)

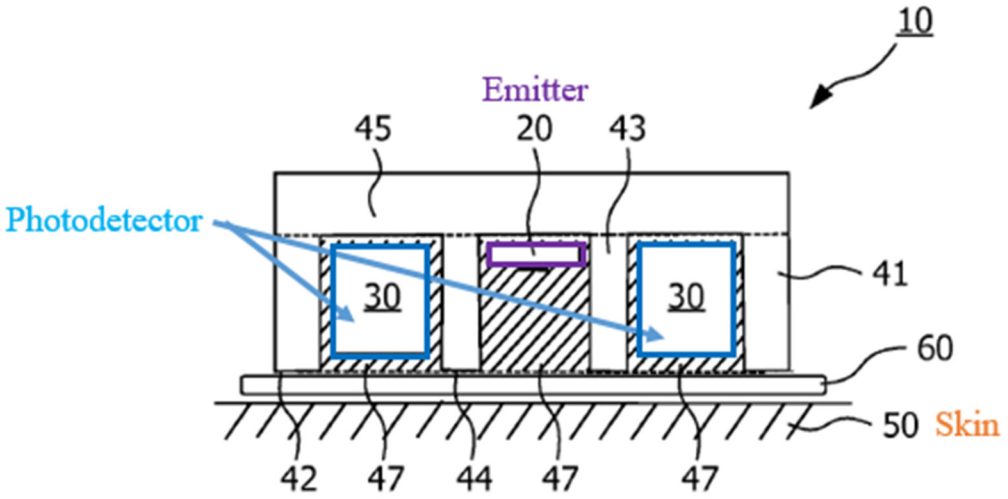

APPLE-1011, FIG. 2 (annotated)

In the example shown in FIG. 7, Ackermans' optical sensor 10 is implemented within a wristwatch for placement on a user at a tissue measurement site. APPLE-1011, 10:29-35; APPLE-1003, ¶35.

MASIMO 2034
Apple v. Masimo
IPR2024-00241

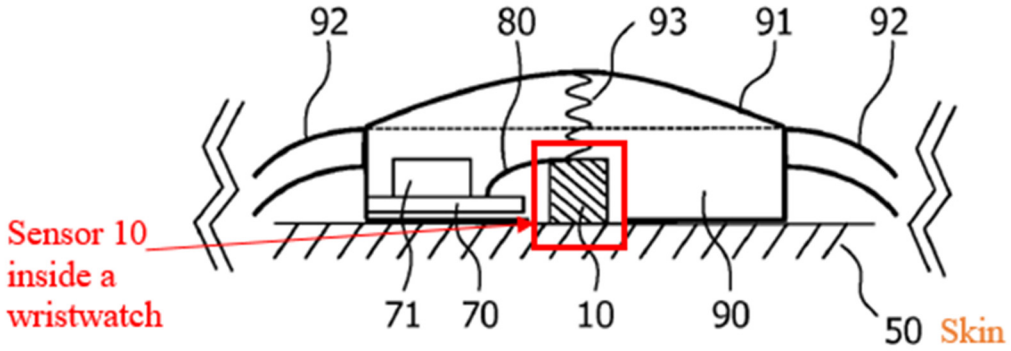

FIG. 7

APPLE-1011, FIG. 7 (annotated)

The frame 90 of the wristwatch is attachable to the skin 50 of a patient with an elastic band. APPLE-1011, 10:29-35. The "optical sensor 10 is positioned at the center of the frame" 90. *Id*. Sensor 10 can be used to obtain physiological measurements such as blood oxygen levels (e.g., arterial oxygen saturation levels) and heart rates. APPLE-1011, 6:15-18, 1:8-18, 13:10-12 (claim 6). "Electrical signals from the at least one photo-detector are processed [by electrical elements] in order to determine an oximetry value." *Id.*, 3:10-12, 8:25-9:2, 10:3-10; APPLE-1003, ¶¶36-37.

Accordingly, Ackermans renders obvious "a wrist-worn physiological monitoring device configured for placement on a user at a tissue measurement site." APPLE-1003, ¶37.

MASIMO 2034
Apple v. Masimo
IPR2024-00241

[1.1] a plurality of light-emitting diodes configured to emit light in a first shape;

As explained above with respect to [1.0], Ackermans describes an optical sensor 10 that includes "at least one light emitter (20) for emitting light (21) directed to a part of the skin (50) of a patient and at least one photo- detector (30) for detecting light (31) reflected from the skin (50)." APPLE-1011, Abstract, 4:22-25; APPLE-1003, ¶¶38-40.

In more detail, Ackermans' optical sensor 10 includes a light emission source (emitter 20 with housing 46) comprising a plurality of emitters in the form of LEDs that emit light at different wavelengths. APPLE-1011, 6:1-8. These LEDs are configured to irradiate the tissue measurement site by emitting light 21 towards the tissue measurement site as shown in FIGS. 1, 3A, and 3B. *Id.*, 6:1-8. Ackermans explains that emitted light enters the skin and photodetectors detect light that reflects back from the skin. *Id.*, 2:15-23, 6:1-8, 7:5-10, Abstract; APPLE-1003, ¶39.

MASIMO 2034
Apple v. Masimo
IPR2024-00241

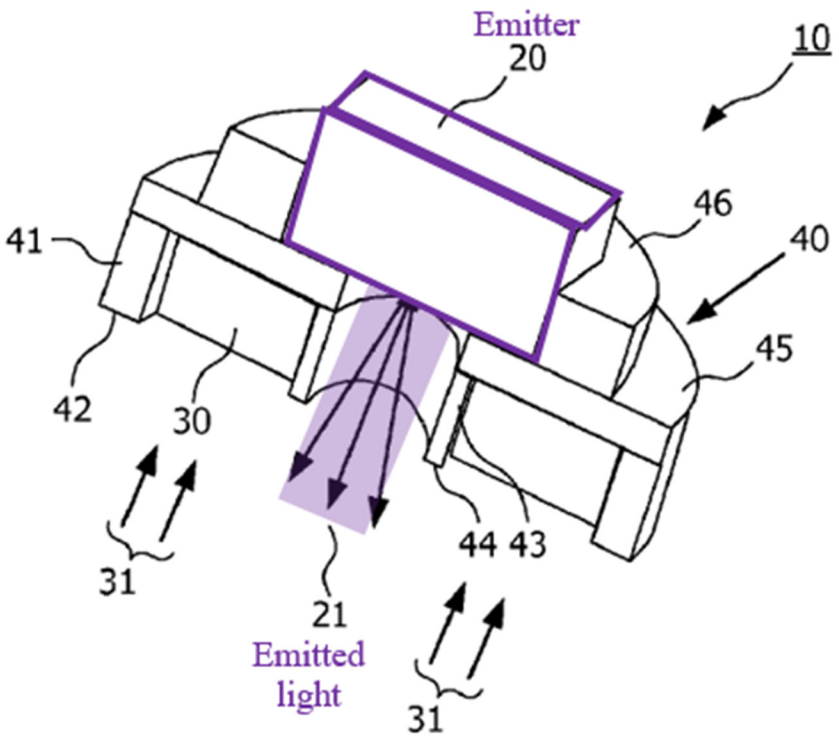

APPLE-1011, FIG. 1 (annotated).

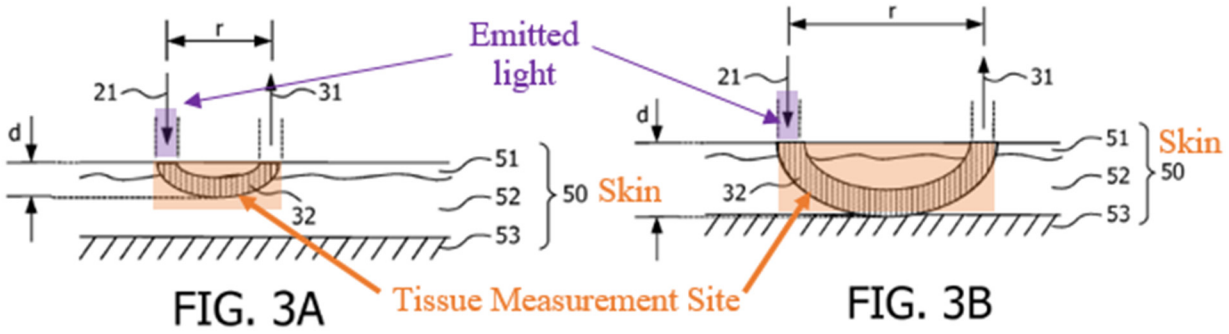

APPLE-1011, FIGS. 3A, 3B (depicting the tissue measurement site and reflection therefrom).

[1.2] a material configured to be positioned between the plurality of light-emitting diodes and tissue on a wrist of a user when the physiological monitoring device is in use, the material configured to change the first shape into a second shape by which the light emitted from one or more of the plurality of light-emitting diodes is projected towards the tissue;

In the combination, Ackermans describes that the optical sensor 10 is

implemented within a "wristwatch" that is "attachable to the skin 50 of a patient with an elastic band 92, for example an ***arm wrist***." APPLE-1011, 10:29-35; APPLE-1003, ¶41.

Also in the combination, Savant describes a "***light shaping diffuser*** (LSD)" which "is a type of diffuser used in a variety of illuminating, imaging, and light projecting applications." APPLE-1012, 1:16-19. Savant describes that "LSDs can be used to ***shape a light beam*** so that over 90% (and up to 95%-98%) of the light beam entering the LSD is directed towards and into contact with a target located downstream of the LSD." *Id*., 1:34-37. "A LSD can be made to collect incoming light and either (1) distribute it over a circular area from a fraction of a degree to over 100°, or (2) send it into an almost unlimited range of elliptical angles." *Id*., 1:37-40. Savant describes that LSDs "exhibit a high degree of versatility because they ***may be employed with light from almost any source, including LEDs, daylight***, a tungsten halogen lamp, or an arc lamp." *Id*., 1:49-51. LSD's can also be used to "control the angular spread of transmitted light." *Id*., 6:16-17; APPLE-1003, ¶42.

The following modified FIG. 1 from Ackermans shows the optical sensor 10 incorporating a light shaping diffuser, as described by Savant. APPLE-1003, ¶43:

MASIMO 2034
Apple v. Masimo
IPR2024-00241

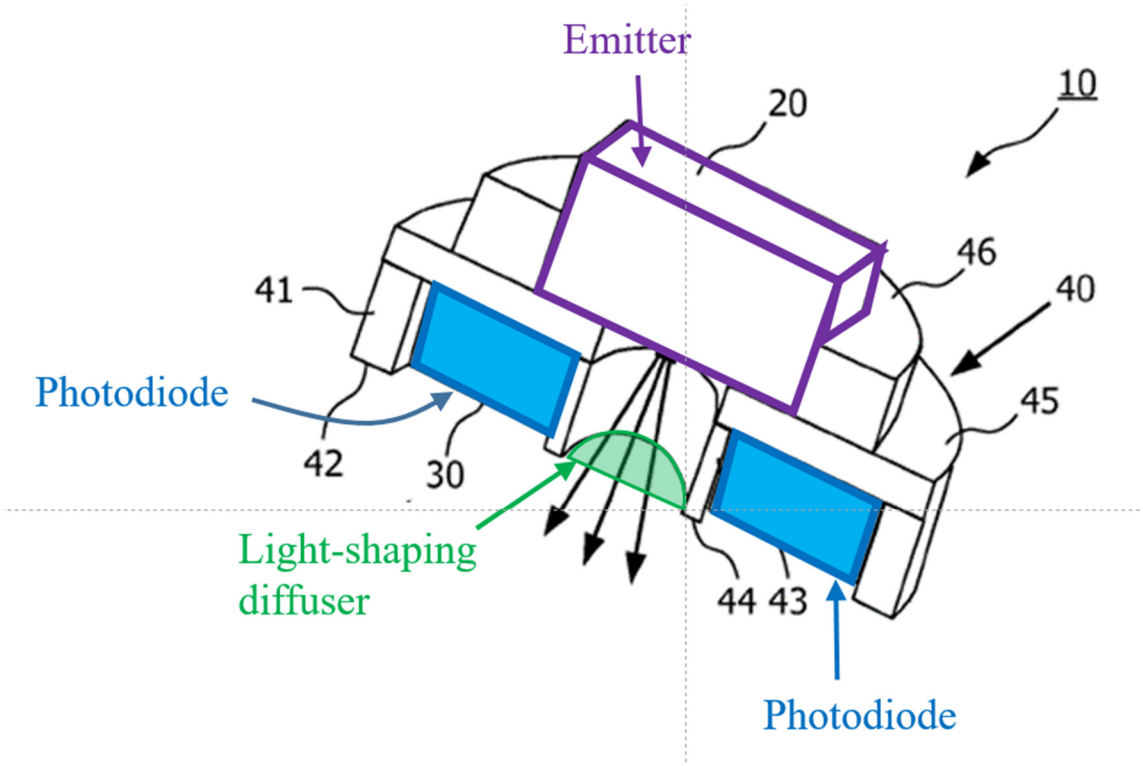

APPLE-1011, FIG. 1 (annotated and modified to add light-shaping diffuser from Savant, shown in green)

As previously discussed, a POSITA would have been motivated to implement a light-shaping diffuser, such as those described in Savant, in the optical sensor 10 of Ackermans. *See* Section IV.A.3-4, *supra*; APPLE-1003, ¶¶44-45.

[1.3] a plurality of photodiodes configured to detect at least a portion of the light after the at least the portion of the light passes through the tissue, the plurality of photodiodes further configured to output at least one signal responsive to the detected light;

As explained above with respect to [1.0] and shown below in FIG. 1, Ackermans discloses at least one photo-detector (30) for detecting light (31)

MASIMO 2034
Apple v. Masimo
IPR2024-00241

reflected from the skin (50). APPLE-1011, Abstract, 2:15-23, 4:22-25. "The [at least one] photo-detector 30 is circular in shape and mounted in the circular groove formed by the base plate 45, the outer ring 41 and the inner ring 42." *Id*. In some implementations, a plurality of detectors can be implemented as "small photodiodes that are arranged between the inner ring 43 and the outer ring 41." *Id.*, 6:9-15. As noted in [1.1], light emitted by the plurality of emitters enters the skin, is attenuated, reflects back from the skin, and is subsequently detected by the photodetectors, as shown in the following annotated figures from Ackermans. *Id.*, 2:15-23, 6:1-8, 7:5-10, Abstract; FIGS. 3A, 3B; APPLE-1003, ¶46:

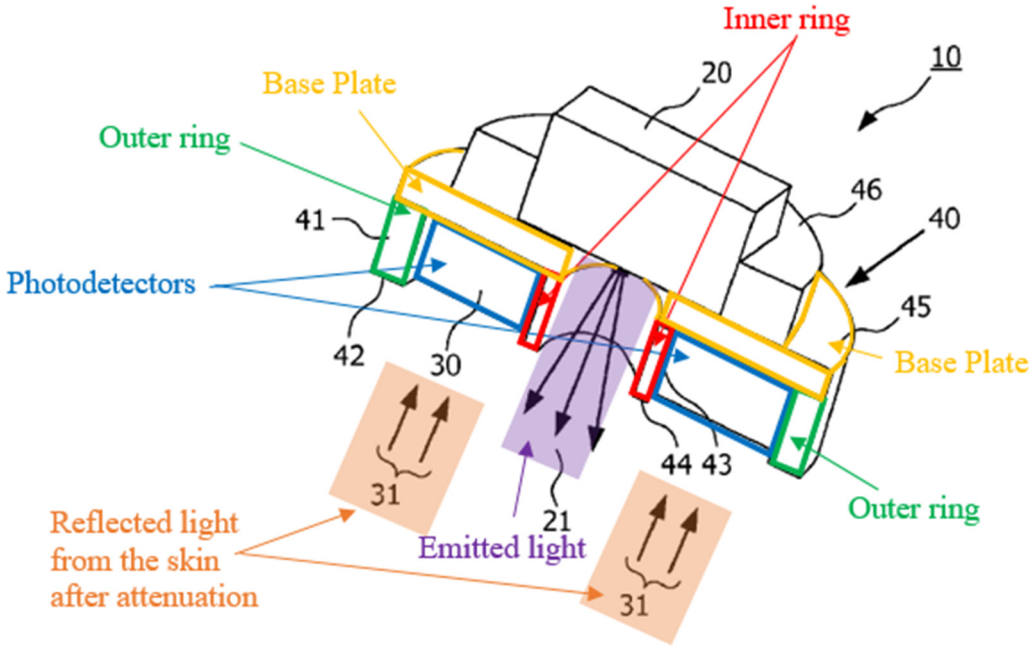

APPLE-1011, FIG. 1 (annotated)

MASIMO 2034
Apple v. Masimo
IPR2024-00241

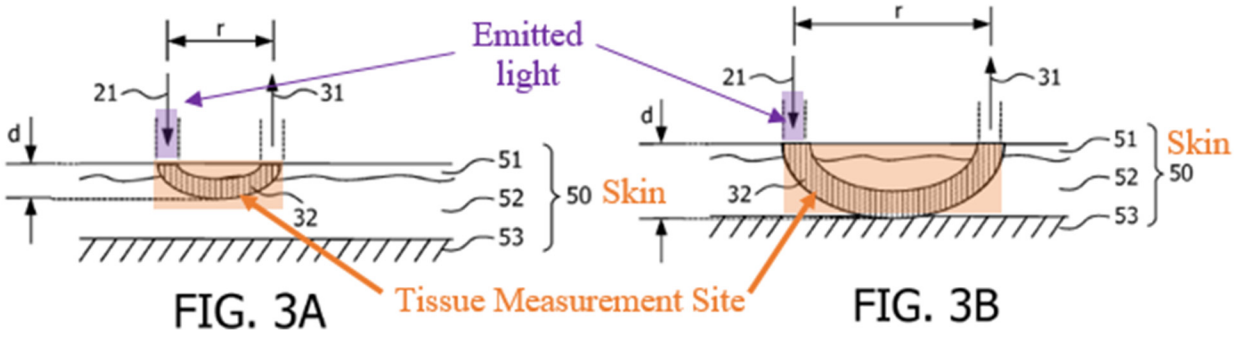

APPLE-1011, FIGS. 3A, 3B (annotated, depicting the tissue measurement site and reflection therefrom).

Ackermans further describes that each photodiode produces "***[e]lectrical signals***" representing detected light, which are then "processed in order to determine an oximetry value." *Id*., 3:11-12; APPLE-1003, ¶¶47-48.

[1.4] a surface comprising a dark-colored coating, the surface configured to be positioned between the plurality of photodiodes and the tissue when the physiological monitoring device is in use,

As previously discussed (*see* [1.0], *supra*), in the combination, Ackermans' optical sensor 10 is implemented within a wristwatch for placement on a user at a tissue measurement site, as shown in FIG. 7. APPLE-1011, 10:29-35; APPLE-1003, ¶49.

MASIMO 2034
Apple v. Masimo
IPR2024-00241

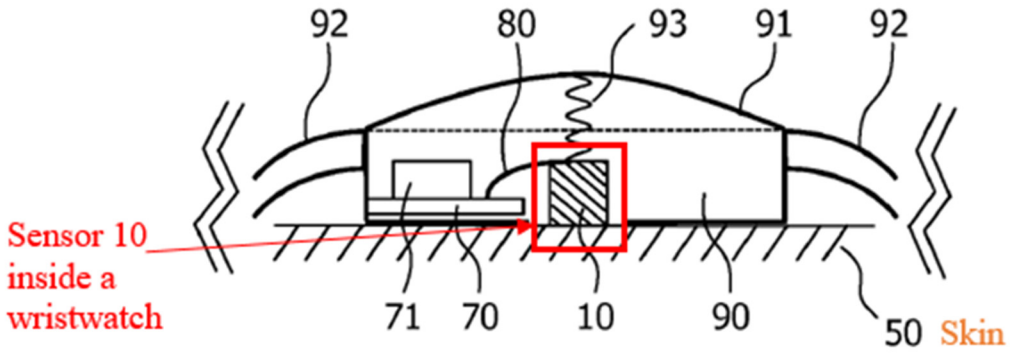

FIG. 7

APPLE-1011, FIG. 7 (annotated)

The frame 90 of the wristwatch is attachable to the skin 50 of a patient with an elastic band. APPLE-1011, 10:29-35. The "optical sensor 10 is positioned at the center of the frame" 90. *Id*. Ackermans further describes that "in addition to the elastic band 92, the frame 90 could be attached to the skin 50 by ***a medical grade adhesive***" (*i.e.*, a coating). *Id*., 11:10-11. Ackermans describes that "the adhesive could be transparent and fix the sensor 10 as well as the frame 90." *Id*., 11:11-12. Ackermans also describes that "***the adhesive could be provided with a central opening*** that leaves the vicinity of the sensor 10 on the skin blank and only fixes the frame 90." *Id*., 11:12-15. In such a case, Ackermans teaches that "***the adhesive does not have to be transparent***," and thus is opaque or dark-colored. *Id*.; APPLE-1003, ¶¶50-51.

[1.5] wherein an opening defined in the dark-colored coating is configured to allow at least a portion of light reflected from the tissue to pass through the surface;

As discussed above (*see* [1.4], *supra*), Ackermans describes that the sensor 10 is attached to the user's skin using a non-transparent adhesive (i.e., a dark-colored coating). Ackermans also describes that "the adhesive could be provided with ***a central opening*** that leaves the vicinity of the sensor 10 on the skin blank and only fixes the frame 90," thereby allowing light reflected from the tissue to pass through. APPLE-1011, 11:12-15; APPLE-1003, ¶¶52-53.

[1.6] a light block configured to prevent at least a portion of the light emitted from the plurality of light-emitting diodes from reaching the plurality of photodiodes without first reaching the tissue; and

As explained above with respect to [1.0], [1.3], Ackermans' inner ring 43 "shadows the photodetector 30 from emitted light 21" and operates as a light block that prevents light from the emitters 20 from being detected directly by the photodetectors 30 without attenuation by the user's skin. APPLE-1011, 5:10-15. APPLE-1003, ¶¶54-56.

In more detail, Ackermans' inner ring 43 includes rim 44. *Id.*, 4:25. As shown in FIGS. 1 and 2 below, a POSITA would have understood that the inner ring 43 and its rim 44 form a wall between the emitter 20 (light emission source) and the plurality of detectors 30. *Id.,* 4:22-32, 6:22-31; APPLE-1003, ¶55. "Both the light emitter 20 and the photo-detector 30 are mounted recessed from the plane

MASIMO 2034
Apple v. Masimo
IPR2024-00241

defined by the rims 42 and 44. ***As a result, the inner ring 43 prevents light emitted by the light emitter 20 from shining directly into the photo–detector 30***." *Id.*, 6:31-35; APPLE-1003, ¶55.

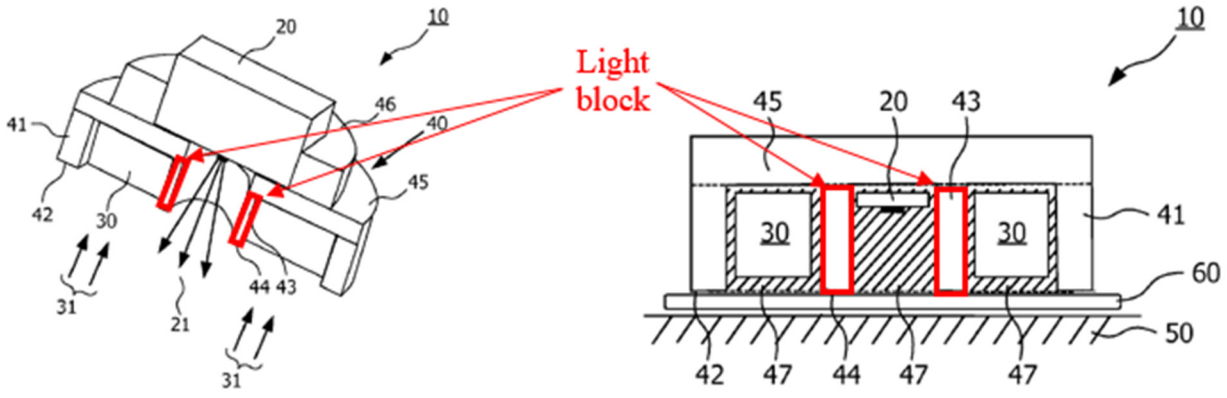

APPLE-1011, FIGS. 1 (left) and 2 (right), (annotated)

[1.7] a processor configured to receive and process the outputted at least one signal and determine a physiological parameter of the user responsive to the outputted at least one signal.

As previously discussed, Ackermans describes that the plurality of photodiodes produce "***[e]lectrical signals***" representing detected light, which are then "processed in order to ***determine an oximetry value***" (*i.e.*, a physiological parameter). APPLE-1011, 3:11-12; APPLE-1003, ¶57. Ackermans further describes an "electrical element" (*i.e.*, a processor) for "***receiving and processing the electrical signals of the photo-detectors***." APPLE-1011, 10:6-8; APPLE-1003, ¶¶57-58.

MASIMO 2034
Apple v. Masimo
IPR2024-00241

(b) Claim 2

[2.0] The physiological monitoring device of claim 1, wherein at least one of the plurality of light-emitting diodes is configured to emit light of a first wavelength and at least one of the plurality of light-emitting diodes is configured to emit light of a second wavelength, the second wavelength being different than the first wavelength.

In the combination, Ackermans discloses that "***more than one LED*** … could be mounted[] … for the option of having light of ***different wavelengths*** available." APPLE-1011, 6:5-7. For example, to measure "the oxygenation level of blood in a pulse oximeter," "a light emitter 20 is used that emits light at two different wavelengths, usually around 660 nm and 940 nm." *Id.*, 6:15-18, 1:11-15; APPLE-1003, ¶¶59-60.

(c) Claim 5

[5.0] The physiological monitoring device of claim 1, wherein the plurality of light-emitting diodes and the plurality of photodiodes are arranged in a reflectance measurement configuration.

According to the '745 Patent, "[r]eflective pulse oximetry is a method by which the emitter and detector are located on the same side of the tissue measurement site 102." APPLE-1001, 10:14-16; *see also id.*, FIGS. 6, 7A-7B. This contrasts with transmissive pulse oximetry in which the emitter and detector are located on opposite sides of the measurement site. *See id.*, FIG. 3; APPLE-1003, ¶¶61-63.

In the combination, Ackermans discloses that the at least one photodetector (30) and the LEDs of light emitter (20) are both located on the same side of the

MASIMO 2034
Apple v. Masimo
IPR2024-00241

tissue measurement site 102, and are therefore arranged in a reflectance measurement configuration. APPLE-1011, 4:23-5-9, 10:29-11:15, FIGS. 1, 7; APPLE-1003, ¶62.

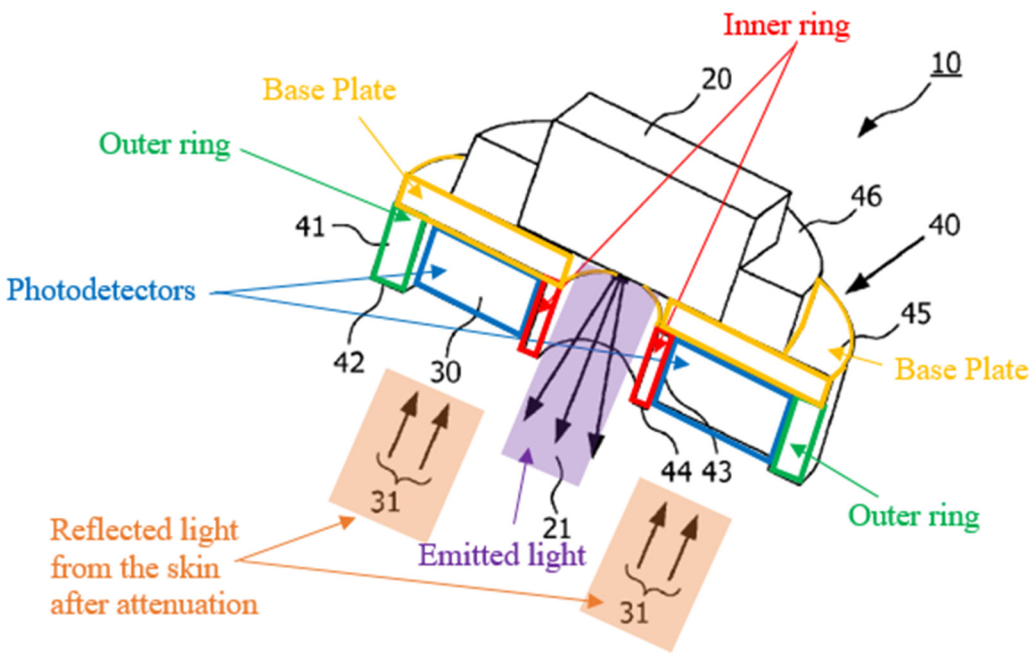

APPLE-1011, FIG. 1 (annotated, depicting photodetectors 30 and emitters 20 on the same side of the tissue measurement site)

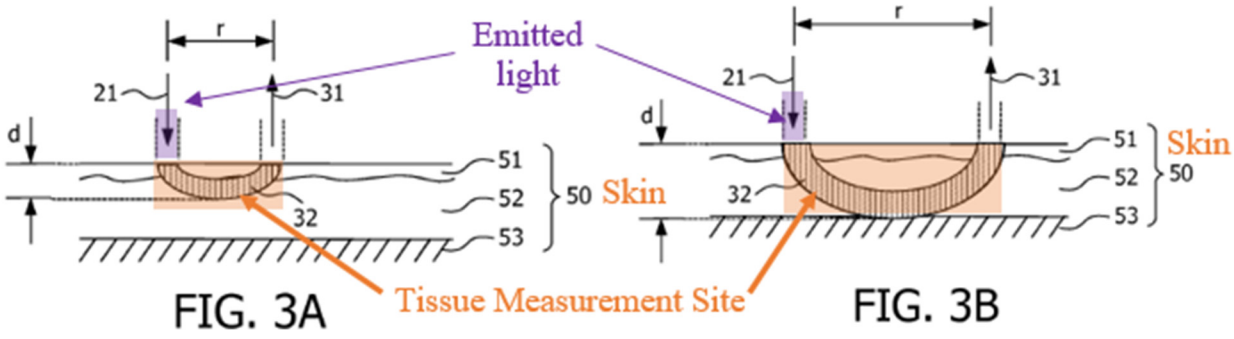

APPLE-1011, FIGS. 3A, 3B (annotated, depicting the tissue measurement site and reflection therefrom).

MASIMO 2034
Apple v. Masimo
IPR2024-00241

(d) Claim 6

[6.0] The physiological monitoring device of claim 1, wherein the plurality of photodiodes are arranged in an array having a spatial configuration corresponding to a shape of a portion of the tissue bounded by the light block.

As explained above, Ackermans describes that the plurality of photodiodes "are arranged between the inner ring 43 and the outer ring 41." APPLE-1011, 6:9-15; *see* [1.3], *supra*. Because the photodiodes 30 are arranged between two rings, a POSITA would have understood that detectors are arranged in an array having a circular spatial configuration. APPLE-1003, ¶¶64-67; *see, e.g.,* APPLE-1011, 6:9-15. And because this array is shaped by the inner ring 43 (the light block, *see* [1.6], *supra*), it also corresponds to and encircles and bounds the circular portion of the tissue measurement site. In particular, as explained above, the inner ring 43 encircles the tissue measurement site, and light from the emitters can only fall within this circular area (from which subsequent scattering and reflection occurs). APPLE-1003, ¶¶64-68; *supra*, [1.3]; *infra*, [15.4].

(e) Claim 8

[8.0] The physiological monitoring device of claim 1, wherein the physiological parameter comprises pulse rate.

In the combination, Ackermans discloses determining a pulse rate of a user responsive to signals produced by the at least one photodetector (30). APPLE-1011, 1:16-17 ("In addition to measuring the oxygenation level of blood, pulse oximeters also provide a ***pulse signal for determining a heart rate of a patient***."),

MASIMO 2034
Apple v. Masimo
IPR2024-00241

Claim 6 ("wavelengths that are suited for determining … rate in a pulse oximeter"); APPLE-1003, ¶¶69-70.

(f) Claim 10

[10.0] The physiological monitoring device of claim 1, wherein the material comprises glass.

Savant describes how the light-shaping diffuser can be made of glass. APPLE-1012, Abstract ("A surface light shaping diffuser (LSD) is formed from a monolithic glass material …"), 1:11-13, 4:39-42, 5:8-12; APPLE-1003, ¶¶71-73. It would have been obvious to implement the diffuser in the combination using a glass material as taught in Savant due to the ability of glass to be molded into a suitable shape for the application, the ability of glass to support micro-structures that enable light diffusion, and the favorable temperature characteristics of glass that allow it to be used in a range of thermal environments. APPLE-1003, ¶71.

The use of a glass diffuser in the combination also would have been obvious to a POSITA since it merely entails the use of a known solution to improve similar systems and methods in the same way. APPLE-1003, ¶72. "[W]hen a patent 'simply arranges old elements with each performing the same function it had been known to perform' and yields no more than one would expect from such an arrangement, the combination is obvious." *KSR*, 550 U.S. at 417. Here, applying Savant's teaching of a glass diffuser to Ackermans' sensor would have yielded a predictable result of a light-shaping diffuser that changes the shape of emitted light

MASIMO 2034
Apple v. Masimo
IPR2024-00241

into a second shape for projection onto the tissue. APPLE-1003, ¶72; *see* [1.2].

(g) Claim 11

[11.0] The physiological monitoring device of claim 1, wherein the material comprises plastic.

In the combination, Savant teaches that light-shaping diffusers were commonly "formed from plastics such as acrylic or polycarbonate." APPLE-1012, 2:59-65. A benefit of plastic material for LSDs is that it is "sufficiently deformable … to accept the light shaping structures." *Id.*, 2:61-63.

Although, according to Savant, plastic is not suitable for use in all applications, e.g., high-temperature environments above 150° C / 302° F or above 100° C / 212° F, a POSITA would have appreciated that the relatively-low powered LEDs used in pulse oximetry sensors like that disclosed in Ackermans would operate at temperatures far lower than these glass transition temperatures of plastic. APPLE-1003, ¶¶74-75. In the context of a pulse oximetry device, it would have been obvious to implement an LSD with a plastic material for multiple reasons, including wide availability of plastic LSDs as acknowledged in Savant, the ability of plastic to be readily deformed to accept light shaping structures, the relatively low cost of plastic material, and to improve the durability of the LSD by rendering it less susceptible to fracturing than a glass material. *Id.*

The use of a plastic diffuser in the combination also would have been obvious to a POSITA since it merely entails the use of a known solution to

MASIMO 2034
Apple v. Masimo
IPR2024-00241

improve similar systems and methods in the same way. APPLE-1003, ¶76. "[W]hen a patent 'simply arranges old elements with each performing the same function it had been known to perform' and yields no more than one would expect from such an arrangement, the combination is obvious." *KSR*, 550 U.S. at 417. Here, applying Savant's teaching of a plastic diffuser to Ackermans' sensor would have yielded a predictable result of a light-shaping diffuser that changes the shape of emitted light into a second shape for projection onto the tissue. APPLE-1003, ¶¶76-77; *see* [1.2].

(h) Claim 12

[12.0] The physiological monitoring device of claim 1, wherein the second shape comprises a circular geometry.

Savant discloses an LSD that "diffract[s] light passing through the LSD so that the beam of light emitted from the LSD's exit surface exhibits a precisely controlled energy distribution," and the light is shaped so that "over 90% (and up to 95%-98%) of the light beam entering the LSD is directed towards and into contact with a target located downstream of the LSD." APPLE-1012, 1:30-37. Savant further explains that the "LSD can be made to collect incoming light and … distribute it over a ***circular area*** from a fraction of a degree to over 100°." *Id.*, 1:37-38.

In the combination as described above, an LSD like that taught in Savant is incorporated between the LEDs and tissue measurement site in an optical sensor

MASIMO 2034
Apple v. Masimo
IPR2024-00241

like that taught in Ackermans. *See* Section IV.A.3; APPLE-1003, ¶¶78-80. Applying Savant's teaching of distributing light from the LSD over a circular area would have resulted in the LSD in the combination changing the light from a first shape emitted by the LEDs to a second, circular shape with an area of distribution determined by the properties of the LSD. APPLE-1003, ¶79. It would have been obvious to use the LSD in the combination to shape the light in a circular geometry, and a POSITA would have been motivated to do so to match the shape of the emitted light to the circular shape of the inner ring of the sensor (10) as taught in Ackermans. *Id.*; APPLE-1010, 4:23-32, 5:4-9, FIG. 1. By matching the shape of the emitted light to the circular shape of the inner ring, the LSD would beneficially distribute emitted light over the entire surface area of the tissue measurement site encompassed by the inner ring, and would promote an even distribution of the light in all directions such that the reflected light could be readily detected by any portion of the circular photo-detector (30). APPLE-1003, ¶79.

(i) Claim 15

[15.0] A physiological monitoring device comprising:

See [1.0]; APPLE-1003, ¶81.

[15.1] a plurality of light-emitting diodes configured to emit light proximate a wrist of a user;

As previously discussed (*see* 1.1]), Ackermans describes that the optical

MASIMO 2034
Apple v. Masimo
IPR2024-00241

sensor 10 includes a plurality of light emitting diodes. Ackermans further describes that the optical sensor 10 is implemented within a "wristwatch" that is "attachable to the skin 50 of a patient with an elastic band 92, for example an ***arm wrist***." APPLE-1011, 10:29-35; APPLE-1003, ¶¶82-84. This configuration is shown in FIG. 7 from Ackermans:

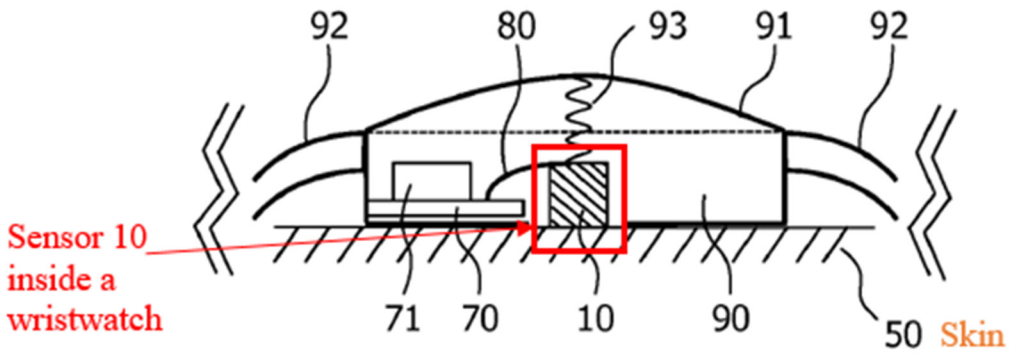

FIG. 7

APPLE-1011, FIG. 7 (annotated)

In this configuration, the plurality of light emitting diodes would be configured to emit light "directed onto the skin" of the user's wrist. APPLE-1011, 4:34-5:2; APPLE-1003, ¶83.

[15.2] a light diffusing material configured to be positioned between the plurality of light-emitting diodes and a tissue measurement site on the wrist of the user when the physiological monitoring device is in use;

See [1.2]; APPLE-1003, ¶85.

MASIMO 2034
Apple v. Masimo
IPR2024-00241

[15.3] a light block having a circular shape;

As previously discussed, in the combination, Ackermans describes that the optical sensor 10 includes a light block ("inner ring 43"). *See* [1.6]. The inner ring 43 is circular in shape, as denoted by the term "ring" and shown in FIGS. 1 and 2 from Ackermans. APPLE-1003, ¶¶86-87:

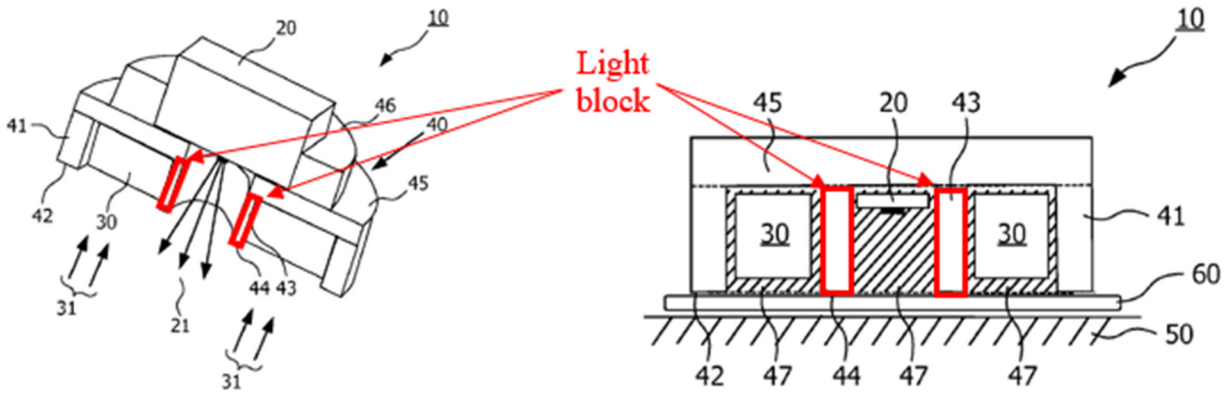

APPLE-1011, FIGS. 1 (left) and 2 (right), (annotated)

[15.4] a plurality of photodiodes configured to detect at least a portion of the light emitted from the plurality of light-emitting diodes after the light passes through the light diffusing material and a portion of the tissue measurement site encircled by the light block[3]

As previously discussed (*see* [1.3], *supra*), in the combination, Ackermans describes that the sensor 10 includes a plurality of photodiodes configured to detect light emitted by the light emitting diodes that is reflected by the tissue

[3] Petitioner does not concede that this limitation, or any other limitation of '745 Patent, is not indefinite, and reserves the right to argue indefiniteness in other proceedings where such arguments are permitted.

MASIMO 2034
Apple v. Masimo
IPR2024-00241

measurement site. As also previously discussed (*see* [15.3], *supra*), the sensor 10 includes a light block ("inner ring 43") having a circular shape. APPLE-1003, ¶¶88-90.

As explained above, Ackermans describes that the plurality of photodiodes "are arranged between the inner ring 43" (the light block) "and the outer ring 41." APPLE-1011, 6:9-15; *see* [1.3], *supra*. Ackermans describes that the inner ring 43 (the light block) prevents light from the light-emitting diodes 20 from reaching the photodiodes 30 without traveling through the tissue measurement site. APPLE-1011, 6:32-34 ("the inner ring 43 prevents light emitted by the light emitter 20 from shining directly into the photo-detector 30."). Thus, any emitted light that reaches the photodiodes 30 will have traveled through the only area of the tissue measurement site that is exposed to the light emitted by the light emitting diodes 20: the area that is encircled by the inner ring 43 (*i.e.*, the light block). *See id.,* 6:32-34, FIG. 2; *see* [1.3], *supra*; APPLE-1003, ¶89. The following annotated FIG. 2 from Ackermans shows this configuration:

MASIMO 2034
Apple v. Masimo
IPR2024-00241

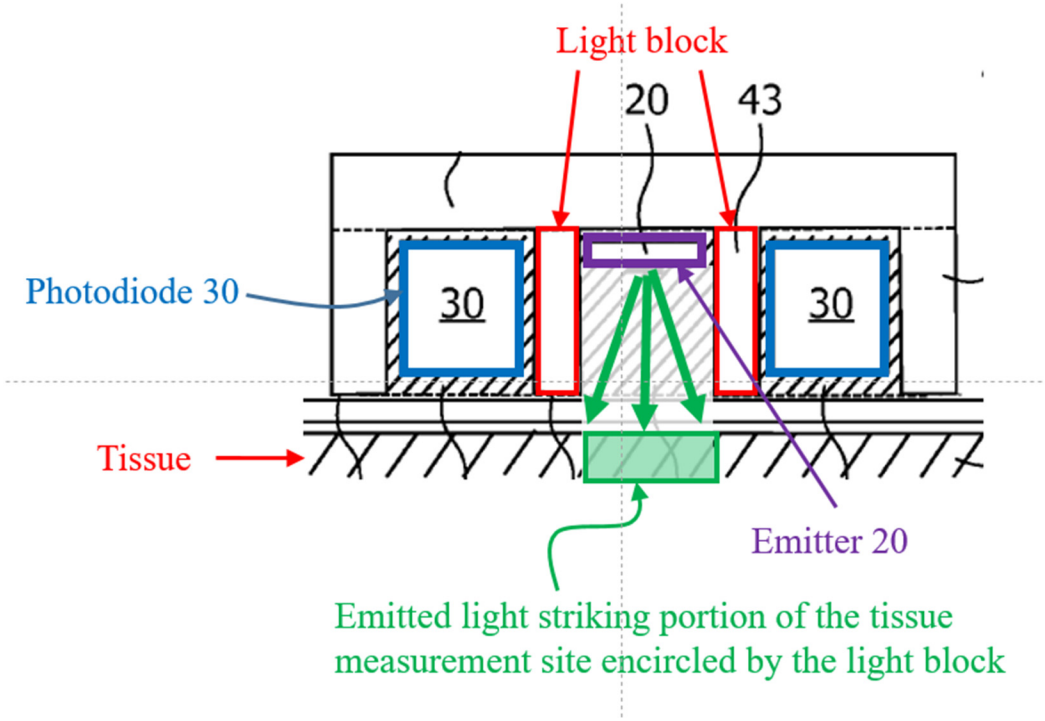

APPLE-1011, Detail of FIG. 2 (annotated)

[15.5] wherein the plurality of photodiodes are arranged in an array having a spatial configuration corresponding to a shape of the portion of the tissue measurement site encircled by the light block

As explained above, Ackermans describes that the plurality of photodiodes "are arranged between the inner ring 43 and the outer ring 41." APPLE-1011, 6:9-15; *see* [1.3], [6.0] *supra*. Because the photodiodes 30 are arranged between two rings, a POSITA would have understood that detectors are arranged in an array having a circular spatial configuration. APPLE-1003, ¶91; *see, e.g.,* APPLE-1011, 6:9-15. And because this array is shaped by the inner ring 43 (the light block, *see* [1.6], *supra*), it also corresponds to and encircles the circular portion of the tissue measurement site. In particular, as explained above, the inner ring 43 encircles the

MASIMO 2034
Apple v. Masimo
IPR2024-00241

tissue measurement site because light from the emitters can only fall within this circular area (from which subsequent scattering and reflection occurs). APPLE-1003, ¶¶91-92; *supra*, [1.3], [15.4], [6.0].

[15.6] wherein the plurality of photodiodes are further configured to output at least one signal responsive to the detected light, and

See [1.3]; APPLE-1003, ¶93.

[15.7] wherein the plurality of light-emitting diodes and the plurality of photodiodes are arranged in a reflectance measurement configuration;

As explained above in [1.0], in one of the embodiments shown in FIG. 7, Ackermans' optical sensor 10 is implemented within a wristwatch for placement on a user at a tissue measurement site. APPLE-1011, 10:29-35; APPLE-1003, ¶94.

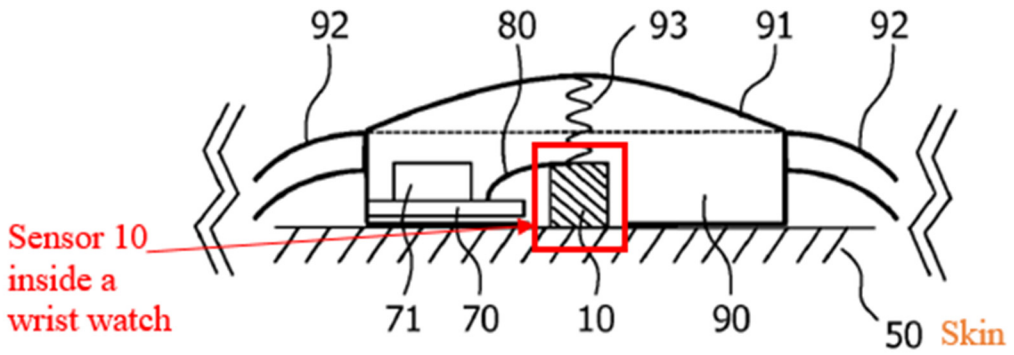

FIG. 7

APPLE-1011, FIG. 7 (annotated)

Ackermans explains that a transmissive pulse oximeter measurement configuration occurs when a light emitter and photo-detector are on opposite sides of skin tissue, and that a reflectance pulse oximeter measurement configuration occurs when a light emitter and photo-detector are adjacent to each other on the

MASIMO 2034
Apple v. Masimo
IPR2024-00241

same side of skin tissue. APPLE-1011, 1:18-23; APPLE-1003, ¶95.

Consistent with this characterization of a reflectance measurement configuration, the configuration depicted in FIG. 7 (which includes emitters and detectors in sensor 10 on the same side of the tissue measurement site) would have been understood by a POSITA to be a reflectance measurement configuration. APPLE-1003, ¶¶96-97; *see, e.g.* APPLE-1011, 2:15-23 ("a medical optical sensor comprises … at least one photo-detector for detecting light ***reflected from the skin***"), 3:8-12 ("light is then ***reflected by the patient's skin*** and received by at least one photo-detector"), 4:22-25, 2:15-23, 5:2-15, 6:1-8, 7:5-28, FIGS. 3A, 3B.

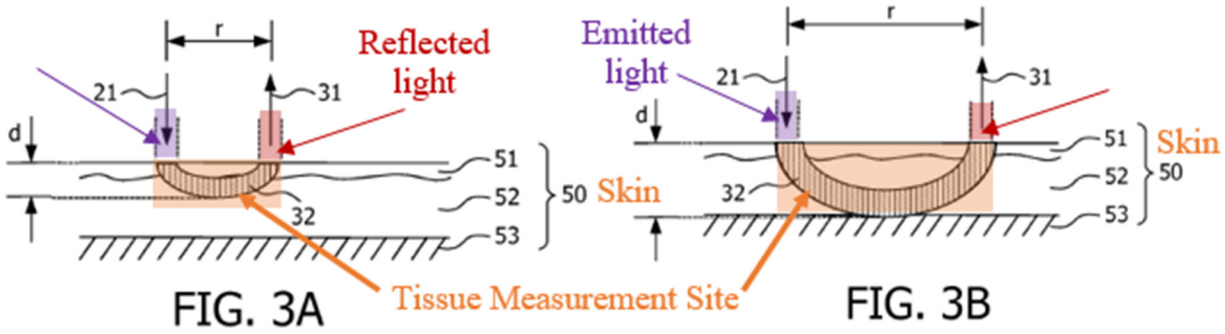

APPLE-1011, FIGS. 3A (left), 3B (right) (annotated, depicting a reflection measurement)

MASIMO 2034
Apple v. Masimo
IPR2024-00241

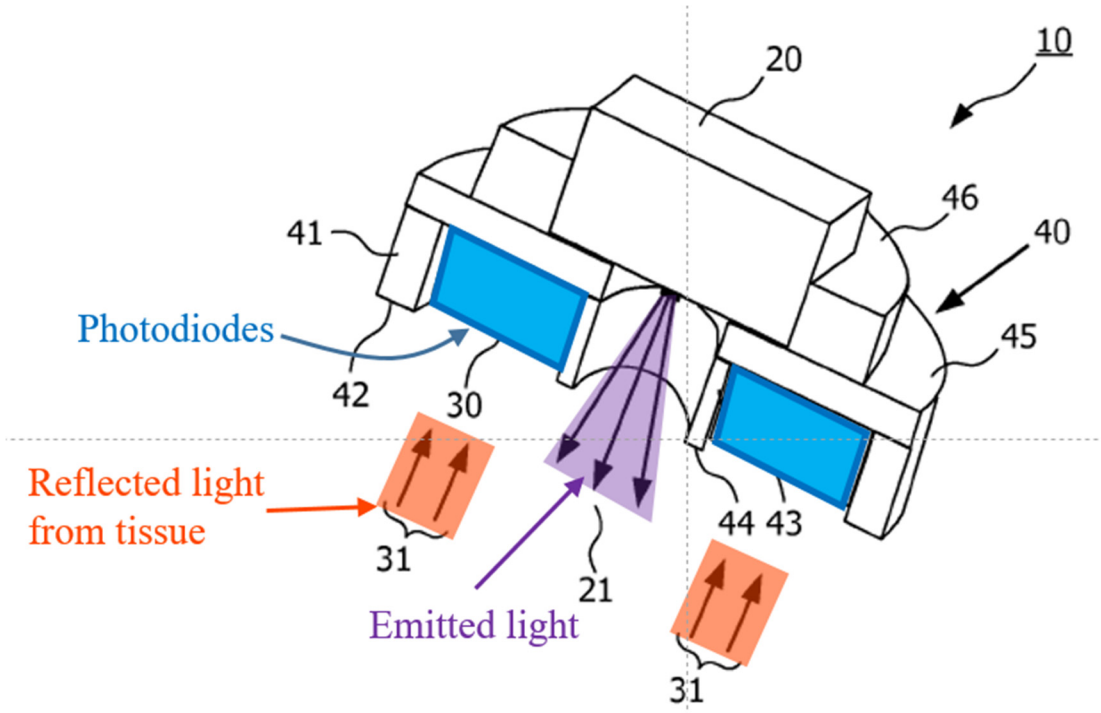

APPLE-1011, FIG. 1 (annotated, showing reflected light 31, and LEDs 20 and photodiodes 30 on the same side of the tissue measurement site)

[15.8] wherein the light block is configured to optically isolate the plurality of light-emitting diodes from the plurality of photodiodes by preventing at least a portion of light emitted from the plurality of light-emitting diodes from reaching the plurality of photodiodes without first reaching the portion of the tissue measurement site;

See [1.6]; APPLE-1003, ¶98.

[15.9] a processor configured to receive and process the outputted at least one signal and determine a physiological parameter of the user responsive to the outputted at least one signal; and

See [1.7]; APPLE-1003, ¶99.

[15.10] wherein the physiological monitoring device is configured to transmit physiological parameter data to a separate processor.

In the combination, Ackermans describes that the sensor 10 includes

"wireless technology for ***transmitting the measured physiological parameters to a***

monitor station." APPLE-1011, 10:24-25. A POSITA would have understood the "monitor station" to which the physiological parameters are transmitted to be a "processor." *See id.;* APPLE-1003, ¶¶100-101.

(j) Claim 17

[17.0] The physiological monitoring device of claim 15, wherein the physiological parameter comprises pulse rate.

See [8.0]; APPLE-1003, ¶102.

(k) Claim 19

[19.0] The physiological monitoring device of claim 15, wherein the plurality of light-emitting diodes are configured to emit light in a first shape, and wherein the light diffusing material is configured to change the first shape into a second shape by which the light emitted from one or more of the plurality of light-emitting diodes is projected towards the tissue measurement site.

See [1.2], [12.0]; APPLE-1003, ¶103.

B. Ground 1B: Claims 3-4 and 21-26 are obvious over Ackermans and Savant in view of Venkatraman

1. Overview of Venkatraman

Venkatraman teaches a portable biometric monitoring device with a touchscreen display that can be worn on the wrist like a watch. APPLE-1006, 12:16-21, 15:19-26, 52:23-53:18. In particular, Venkatraman describes a "biometric monitoring device[] ... adapted to be worn or carried on the body of a user ... including [an] optical heart rate monitor" designed to "be a wrist-worn or arm-mounted accessory such as a watch or bracelet." APPLE-1006, 37:29-33. Venkatraman's monitoring device is "small in size so as to be unobtrusive for the

MASIMO 2034
Apple v. Masimo
IPR2024-00241

wearer" and "designed to be able to be worn without discomfort for long periods of time and to not interfere with normal daily activity." APPLE-1006, 14:28-36. Venkatraman device also includes a digital display with "uses capacitive touch detection" to display data acquired or stored locally on the wristwatch. APPLE-1006, 53:19-55:51; APPLE-1003, ¶26.

Venkatraman further discloses transmitting information wirelessly from its monitoring device to a secondary device such as a smartphone. APPLE-1006, 31:1-16, 57:20-53. Venkatraman also discloses that such a configuration allows the secondary device to act as a user interface for the wrist-worn wearable physiological device. APPLE-1006, 57:42-44. Venkatraman further discloses that the secondary device (*i.e.*, smartphone) can show various metrics regarding the user's health, and receive inputs through a touch-screen display. APPLE-1006, 37:41-63, 55:29-51, 57:20-58:9; APPLE-1003, ¶27.

2. The combination of Ackermans, Savant, and Venkatraman

Ackermans describes that its sensor 10 includes "wireless technology for transmitting the measured physiological parameters to a monitor station." APPLE-1011, 10:24-25; APPLE-1003, ¶104. In the combination, Ackermans sensor 10 (as previously modified based on Savant) is configured to wirelessly transmit the measured physiological parameters to the secondary device (*e.g.*, a smartphone) taught by Venkatraman, which then presents various metrics regarding the user's

MASIMO 2034
Apple v. Masimo
IPR2024-00241

health based on the received physiological parameters through a touch-screen display. APPLE-1006, 37:41-63, 55:29-51, 57:20-58:9; APPLE-1003, ¶104.

3. Reasons to combine Ackermans, Savant, and Venkatraman

A POSITA would have been motivated to wirelessly connect the wristband-type physiological monitoring device of Ackermans (as previously modified based on Savant) to a secondary processing device, such as a smartphone, having a user interface with a touch screen display, as taught by Venkatraman, in order to increase the functionality of the system without significantly increasing the power consumption of Ackermans' sensor. APPLE-1003, ¶105; *see, e.g.,* APPLE-1011, 10:23-27; APPLE-1006, 37:41-63, 55:29-51, 57:20-58:9. For example, Ackermans describes that it is important for its wearable sensors to avoid "power-consuming" features, such as large amounts of data processing or elaborate graphical displays, because such added features may necessitate "a power supply unit with a sufficient battery capacity and an according heavy weight." APPLE-1011, 10:23-27; APPLE-1003, ¶105. By wirelessly "transmitting … measured physiological parameters to a monitor station," such as the smartphone taught by Venkatraman, additional features can be realized, such as the calculation additional metrics regarding the user's health, without the need to increase the battery capacity, and therefore weight, of Ackermans sensor 10. APPLE-1003, ¶105; *see, e.g.,* APPLE-1011, 10:23-27; APPLE-1006, 37:41-63, 55:29-51, 57:20-58:9.

MASIMO 2034
Apple v. Masimo
IPR2024-00241

Further, a POSITA would have found it obvious to modify Ackermans based on Venkatraman because doing so entails the use of known solutions to improve similar systems and methods in the same way. Here, "when a patent 'simply arranges old elements with each performing the same function it had been known to perform' and yields no more than one would expect from such an arrangement, the combination is obvious." *KSR Int'l Co. v. Teleflex Inc.,* 550 U.S. 398, 417 (2007). A POSITA would have recognized that applying Venkatraman's teachings of receiving physiological parameters wirelessly on a smartphone to Ackermans' system would have led to the predictable result, taught by Venkatraman, of a smartphone displaying information based on the received physiological parameters. APPLE-1011, 10:23-27; APPLE-1006, 37:41-63, 55:29-51, 57:20-58:9; APPLE-1003, ¶106.

Accordingly, for at least these reasons, a POSITA would have been motivated and found it obvious to implement the combination of Ackermans and Venkatraman as described above. APPLE-1003, ¶107. Such a modification would have been routine and straightforward to a POSITA, and it would have been clear that such a combination would predictably work and provide the expected functionality, because Venkatraman describes a physiological monitoring device that operated in the proposed manner. APPLE-1003, ¶107; *see, e.g.,* APPLE-1006, 37:41-63, 55:29-51, 57:20-58:9.

MASIMO 2034
Apple v. Masimo
IPR2024-00241

4. Analysis

(a) Claim 3

[3.0] The physiological monitoring device of claim 1, further comprising a display configured to present visual feedback responsive to the determined physiological parameter.

As explained above in Ground 1A, Ackermans' optical sensor (10) is implemented within a wristwatch for placement on a user at a tissue measurement site. APPLE-1011, 10:29-35, FIGS. 7 (reproduced below); APPLE-1003, ¶108.

Ackermans does not expressly disclose a display in the wristwatch configured to present visual feedback to a user responsive to a determined physiological parameter, but such displays were not new or innovative in the '745 Patent. APPLE-1003, ¶109. Venkatraman, for example, discloses a wrist-worn biometric monitoring device having a digital display to present biometric data such as blood-oxygen level or pulse rate to the user. APPLE-1006, 53:23-24 ("the biometric monitoring device may convey data visually through a digital display"), 53:61-62 ("display the heart rate of the user"); 17:1-5 ("SpO_2 (Saturation of Peripheral Oxygen)"), 32:51-56; *generally id.*, 53:19-55:51. Figure 6B depicts one example of a display integrated in the wrist-worn device of Venkatraman:

MASIMO 2034
Apple v. Masimo
IPR2024-00241

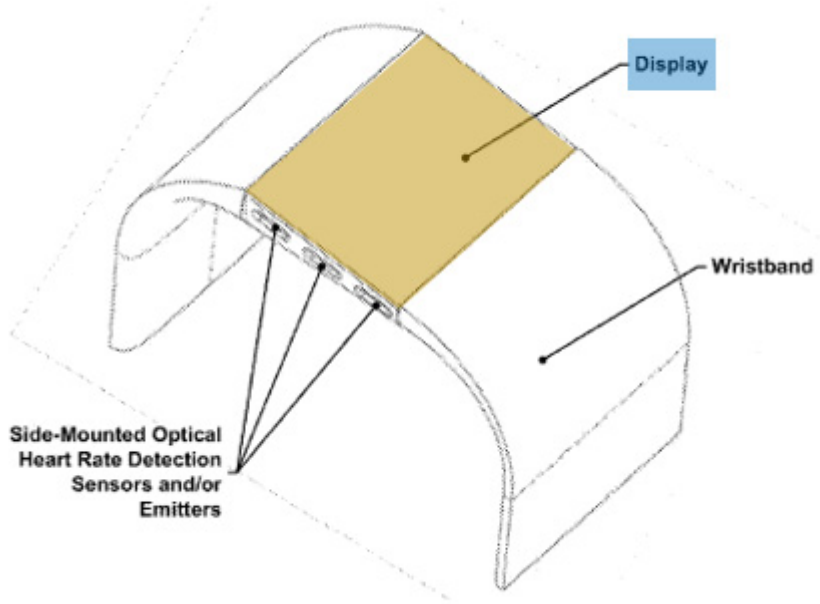

APPLE-1006, FIG. 6B (color added)

It would have been obvious to modify Ackermans' device further in view of Venkatraman to incorporate a display that would present visual feedback to a user responsive to a determined physiological parameter (such as the user's pulse rate or blood oxygen level). APPLE-1003, ¶110. The use of such a display in the combination would have entailed no more than the use of a known technique to improve similar devices in the same way and combining prior art elements according to known methods to yield predictable results. *See KSR*, 550 U.S. at 417. Moreover, upon review of a Venkatraman, multiple benefits of incorporating such a display into the wristwatch would have been apparent to a POSITA. APPLE-1003, ¶¶111-112. Indeed, a POSITA would have immediately recognized that the provision of a display as taught in Venkatraman would have promoted user

MASIMO 2034
Apple v. Masimo
IPR2024-00241

interaction with the device, and would have permitted a user to more readily access data indicative of the user's health. *Id.* The combination would have been predictable and had a reasonable expectation of success, particularly given that the elements of the combined system would each perform the same or similar functions as they had been known to perform in their respective individual systems. *Id.*

(b) Claim 4

[4.0] The physiological monitoring device of claim 3, wherein the display is a touch-screen display.

As discussed in [3.0], it would have been obvious to incorporate in the combination a display for the wristworn oximetry device. APPLE-1003, ¶113. Venkatraman further teaches that the display includes capacitive touch capabilities:

> In embodiments where the ***screen uses capacitive touch detection***, [the biometric monitoring device] may always be sampling and ready to respond to any gesture or input without an intervening event such as pushing a physical button.

APPLE-1006, 55:39-42; *generally id.*, 55:29-51.

It would have been obvious to apply Venkatraman's suggestion for a touch-screen display in the combination to provide an intuitive and convenient method for a user to provide inputs to the monitoring device using touch technologies that were widely available by the Critical Date of the '745 Patent. APPLE-1003,

MASIMO 2034
Apple v. Masimo
IPR2024-00241

¶¶114-115. Additionally, by providing a touch-screen display, separate input devices such as mechanical buttons could be eliminated, thereby streamlining the design of the device and providing room to maximize the display size without significantly increasing the overall size of the wristworn device. *Id.*

(c) Claim 20

[20.0] A system configured to measure one or more physiological parameters of a user, the system comprising:

See Ground 1A, [1.0]; APPLE-1003, ¶116.

[20.1] a physiological monitoring device comprising:

See Ground 1A, [1.0]; APPLE-1003, ¶117.

[20.2] a plurality of light-emitting diodes configured to emit light in a first shape;

See Ground 1A, [1.1]; APPLE-1003, ¶118.

[20.3] a material configured to be positioned between the plurality of light-emitting diodes and tissue of the user when the physiological monitoring device is in use, the material configured to change the first shape into a second shape by which the light emitted from one or more of the plurality of light-emitting diodes is projected towards the tissue;

See Ground 1A, [1.2]; APPLE-1003, ¶119.

[20.4] a plurality of photodiodes configured to detect at least a portion of the light after the at least the portion of the light passes through the tissue, the plurality of photodiodes further configured to output at least one signal responsive to the detected light;

See Ground 1A, [1.3]; APPLE-1003, ¶120.

MASIMO 2034
Apple v. Masimo
IPR2024-00241

[20.5] a surface comprising a dark-colored coating, the surface configured to be positioned between the plurality of photodiodes and the tissue when the physiological monitoring device is in use,

See Ground 1A, [1.4]; APPLE-1003, ¶121.

[20.6] wherein an opening defined in the dark-colored coating is configured to allow at least a portion of light reflected from the tissue to pass through the surface;

See Ground 1A, [1.5]; APPLE-1003, ¶122.

[20.7] a light block configured to prevent at least a portion of light from the plurality of light-emitting diodes from reaching the plurality of photodiodes without first reaching the tissue; and

See Ground 1A, [1.6]; APPLE-1003, ¶123.

[20.8] a processor configured to receive and process the outputted at least one signal and determine a physiological parameter of the user responsive to the outputted at least one signal; and

See Ground 1A, [1.7]; APPLE-1003, ¶124.

[20.9] a processing device configured to wirelessly receive physiological parameter data from the physiological monitoring device, wherein the processing device comprises a user interface, a storage device, and a network interface configured to wirelessly communicate with the physiological monitoring device, and wherein the user interface includes a touch-screen display configured to present visual feedback responsive to the physiological parameter data.

As previously discussed (*see* Ground 1A, [15.10], *supra*), in the combination, Ackermans describes that the sensor 10 includes "wireless technology for ***transmitting the measured physiological parameters to a monitor station***." APPLE-1011, 10:24-25; APPLE-1003, ¶125.

Also in the combination, Venkatraman discloses a wrist-worn wearable

MASIMO 2034
Apple v. Masimo
IPR2024-00241

physiological device and transmitting information wirelessly from that device to a secondary device such as a smartphone. APPLE-1006, 31:1-16, 57:20-53; APPLE-1003, ¶126. Venkatraman also discloses that such a configuration allows the secondary device to act as a user interface for the wrist-worn wearable physiological device. APPLE-1006, 57:42-44; APPLE-1003, ¶126. Venkatraman further discloses that the secondary device (*i.e.*, smartphone) can show various metrics regarding the user's health, and receive inputs through a touch-screen display. APPLE-1006, 37:41-63, 55:29-51, 57:20-58:9; APPLE-1003, ¶126.

(d) Claim 21

[21.0] The system of claim 20, wherein the system is configured to determine a state of wellness of the user based on the determined physiological parameter.

As discussed above in Ground 1A with respect to [1.7], the combined system according to Ackermans is configured to determine a physiological parameter for a user such as the user's level of blood oxygen saturation. APPLE-1011, 1:4-5 ("The invention further relates to methods for measuring the blood oxygenation level by using these sensors."), 6:15-16 ("A typical application of the shown optical medical sensor 10 could be the measurement of the oxygenation level of blood in a pulse oximeter."). Ackermans also discloses that the system can be configured to determine a heart rate for a user (*i.e.*, another physiological parameter). APPLE-1011, 13:10-12, 1:13-17; *supra*, Ground 1A, [8.0]; APPLE-1003, ¶128.

MASIMO 2034
Apple v. Masimo
IPR2024-00241

A POSITA would have understood that the blood oxygen saturation level and heart rate are each measures of a user's "wellness," and that the system therefore determines a state of wellness of the user by determining either or both of the user's blood oxygen saturation level or heart rate. APPLE-1003, ¶¶129-130. Moreover, where the state of wellness is indicated by both the blood oxygen level and heart rate, the user's state of wellness is determined by determining both the first and second physiological parameters (*i.e.*, blood oxygen level and heart rate). *Id.*

(e) Claim 22

[22.0] The system of claim 20, wherein the system is configured to determine a trend of wellness of the user based on the determined physiological parameter.

Venkatraman discloses techniques for determining a trend of wellness of a user based on one or more physiological parameters. APPLE-1003, ¶131. According to Venkatraman, "the biometric monitoring device can compute a user's resting heart rate at home and at work," and "such information can show ***trends*** in home and work resting heart rate over time." APPLE-1006, 21:40-44. A user can select "time periods such as an hour, minute, week, month or year … to enable them to view ***trends*** and metrics of their activities over shorter or larger spans of time." *Id.*, 58:21-24. 58:47-50. In some embodiments, the monitoring device is configured to display "[h]istorical graphs of heart rate and/or other data measured by the device but stored remotely." *Id.*, 59:59-60; *see also id.*, 17:1-7 (disclosing

MASIMO 2034
Apple v. Masimo
IPR2024-00241

SpO_2 oxygen level, heart rate, and heart rate variability among various physiological parameters acquired by the device).

It would have been obvious to apply Venkatraman's suggestion for determining wellness trends based on a measured physiological parameter (*e.g.*, blood oxygen levels or heart rate) in the combination with Ackermans and Savant. APPLE-1003, ¶¶132-133. A POSITA would have been motivated to determine such trends in the combination to improve the ability of patients and/or clinicians to better track indicators of the patient's wellness (e.g., blood oxygen levels or heart rate) over time. *Id.* It would have been well understood by the July 2, 2015, Critical Date of the '745 Patent that additional insights could be gained from reviewing trends of such data beyond that which could be gleaned from static measurements of physiological parameters obtained at a single point in time. *Id.*

(f) Claim 23

[23.0] The system of claim 20, wherein the visual feedback presented by the touch-screen display is responsive to at least one of a pulse rate and an oxygen saturation of the user.

As discussed above with respect to [3.0] and [4.0], Venkatraman discloses a display that presents visual feedback to a user responsive to at least one of a pulse rate and an oxygen saturation of the user. APPLE-1006, 53:23-24 ("the biometric monitoring device may convey data visually through a digital display"), 53:61-62 ("display the heart rate of the user"); 17:1-5 ("Heart Rate" and "SpO_2 (Saturation

MASIMO 2034
Apple v. Masimo
IPR2024-00241

of Peripheral Oxygen)"), 32:51-56; *generally id.*, 53:19-55:51. Also in the combination, Ackermans discloses determination of a blood oxygen saturation of a user, a heart rate of a user, or both. APPLE-1011, 13:10-12 ("determining the arterial oxygen saturation and/or heart rate in a pulse oximeter"), 1:1-17, 1:12-14; APPLE-1003, ¶134.

Venkatraman further teaches how the biometric data (*e.g.*, pulse rate and oxygen saturation) can be presented not just on a display of the wristworn device itself, but also or alternatively at a "secondary device" having a touch-screen display. *See* [20.9]. For example, the wristworn device "may be equipped with wireless and/or wired communication circuitry ***to display data on a secondary device in real time***." APPLE-1006, 55:16-18. "[T]he secondary device that acts as a user interface to the biometric monitoring device may consist of a smartphone," and "[s]uch a smartphone may have one or multiple apps to ***enable the user to view data from their biometric device or devices***." *Id.*, 57:40-57. In the combination, the secondary device would thus present visual feedback through a touch-screen display responsive to at least one of a pulse rate and an oxygen saturation of the user. *See* Section IV.B.2-3, [20.9]; APPLE-1003, ¶¶135-136.

(g) Claim 24

[24.0] The system of claim 20, wherein the material comprises at least one of glass and plastic.

In the combination, Savant describes how the light-shaping diffuser is made

MASIMO 2034
Apple v. Masimo
IPR2024-00241

of glass. APPLE-1012, Abstract ("A surface light shaping diffuser (LSD) is formed from a monolithic glass material …"), 1:11-13, 4:39-42, 5:8-12; *supra,* Ground 1A, [10.0]; APPLE-1003, ¶¶137-138; *see also supra*, Ground 1A, [11.0] (detailing obviousness of the LSD material in the combination alternatively being made of plastic based on the teachings of Savant).

(h) Claim 25

[25.0] The system of claim 20, wherein the second shape comprises a width and a length, and wherein the width is different from the length.

Savant discloses an LSD that "diffract[s] light passing through the LSD so that the beam of light emitted from the LSD's exit surface exhibits a precisely controlled energy distribution," and the light is shaped so that "over 90% (and up to 95%-98%) of the light beam entering the LSD is directed towards and into contact with a target located downstream of the LSD." APPLE-1012, 1:30-37. Savant further explains that the "LSD can be made to collect incoming light and … send it into an almost unlimited range of ***elliptical*** angles," e.g., to produce a "line" or "narrow filed." *Id.*, 1:37-44. A POSITA would have understood that an "elliptical angle," by virtue of being elliptical, produces a beam of light having a width and a length that are different from each other. APPLE-1003, ¶139. Savant specifically distinguishes an "elliptical angle" from a "circular area," making clear that the elliptical angle is not merely circular. *Id.*; APPLE-1012, 1:37-44.

In the combination as described above, an LSD like that taught in Savant is

MASIMO 2034
Apple v. Masimo
IPR2024-00241

incorporated between the LEDs and tissue measurement site in a pulse oximetry sensor like that in Ackermans. *See* Section IV.A.3; APPLE-1003, ¶140. Furthermore, in the combination, implementing the LSD to distribute light over an elliptical angle would have involved configuring the LSD to receive the light from a first shape emitted by the LEDs to a second, elliptical shape with an area of distribution determined by the properties of the LSD. APPLE-1003, ¶¶140-141.

(i) Claim 26

[26.0] The system of claim 20, wherein the plurality of photodiodes are arranged in an array having a spatial configuration corresponding to a shape of a portion of the tissue encircled by the light block.

See Ground 1A, [6.0], [15.4]; APPLE-1003, ¶142.

C. Ground 1C: Claims 13-14 are obvious over Ackermans in view of Savant and Sarantos

1. Overview of Sarantos

Sarantos describes a "wristband-type wearable fitness monitor" that measures "physiological parameters" of the wearer, such as the person's "heart rate" and "blood oxygenation levels." APPLE-1005, 2:5-14, 5:55-59, 7:12-14, 13:39-47. The monitor performs these measurements using a photoplethysmographic (PPG) sensor, which includes one or more light sources (e.g., LEDs) and an array of photodetectors. *Id.*, 1:9-10, 43-47, 7:12-16, 15:23-43. Sarantos describes that when the monitor "is worn by a person in a manner similar to a wristwatch, the back face" of the monitor "may be pressed against the person's

MASIMO 2034
Apple v. Masimo
IPR2024-00241

skin, allowing the light sources" of the PPG sensor "to illuminate the person's skin." *Id*., 1:48-51, 7:12-23. The light "diffuses through the person's flesh and a portion of this light is then emitted back" (i.e., reflected) "out of the person's skin in close proximity to where the light was introduced into the flesh." *Id*., 7:24-28; APPLE-1003, ¶28. The photodetector array of the PPG sensor measures the "intensity" of this reflected light, and provides signals representing the intensity to "control logic" of the monitoring device. APPLE-1005, 2:5-14, 7:12-23, 13:39-47. The control logic can then calculate different physiological parameters based on characteristics of the reflected light signal. *Id*., 1:54-56, 7:12-23. For example, the person's heart rate can be calculated based on "fluctuations in the amount of light from the light source that is emanated back out of the flesh" that correspond to fluctuations in blood volume associated with each beat of the person's heart. *Id*., 7:23-60; APPLE-1003, ¶28.

2. The combination of Ackermans, Savant, and Sarantos

As discussed above with respect to [1.3] and [6.0], Ackermans discloses a ring-shaped physiological sensor (10) in which one or more photo-detectors (30) are disposed in a circular configuration around a light emitter (20) at the center of the sensor (10). *See* Ground 1A at [1.3], [6.0]; APPLE-1011, 4:23-5:20, FIGS. 1, 7; APPLE-1003, ¶143. Ackermans teaches that the photo-detector (30) can be a "single circular shaped photo-detector filling almost the entire available space

MASIMO 2034
Apple v. Masimo
IPR2024-00241

between the inner ring (43) and the outer ring (41). APPLE-1011, 6:27-29. Alternatively, "a plurality of smaller photo-detectors could be used, for example small photodiodes that are arranged between the inner ring 43 and the outer ring 41." APPLE-1011, 6:9-14.

Ackermans does not describe in detail the structure or geometry of the "plurality of smaller photo-detectors" used in the latter embodiments, although photo-detectors that would have been suitable and beneficial for use in this context were well-known in the prior art before the Critical Date of the '745 Patent. APPLE-1003, ¶144. Sarantos, for example, discloses "high-aspect ratio" (*i.e.,* "HAR") photo-detectors in optical sensors (e.g., PPG or pulse oximetry sensors) like those disclosed in Ackermans. Sarantos proposed the concept of HAR photo-detectors to address perceived problems with square photodetector elements, which were ordinarily used in "conventional PPG sensor[s]":

> As noted above, ***a conventional PPG sensor may include a square photodetector element*** that is located near a light source (or, in many cases, near two or more light sources). ***The present inventors determined that such an arrangement was inefficient in terms of signal collection as a function of potential power consumption***. For example, photodetectors are typically composed of a single photosensitive lateral area, e.g., the area of the photodetector that is parallel to the photodetector die top

MASIMO 2034
Apple v. Masimo
IPR2024-00241

> surface, that provides an output signal that indicates the total amount of light that is incident on the photosensitive cell at any given moment in time. The amount of power that such a photodetector consumes is directly tied to the size of the photosensitive area of the photodetector. ***The present inventors determined that, for a square photodetector element, a large percentage of the photodetector element may be located in positions where a much lower amount of AC light is emanated in comparison to locations where other portions of the photodetector element are located***.

APPLE-1005, 8:19-36.

Specifically, as used in Sarantos, a HAR photodetector "refers to non-square photodetectors where at least 90% of the photodetector element active area[] … has a maximum first dimension along a first axis that is at least twice as large as a maximum second dimension of the photodetector element along a second axis that is perpendicular or orthogonal to the first axis." *Id.*, 9:47-65; *generally id.*, 9:48-10:26. According to Sarantos, "a significant performance increase may be realized by deviating from the typical square (or nearly-square) aspect ratios that are used in photodetector elements of conventional PPG sensors." *Id.*, 9:48-51.

In the combination, the photo-detectors (30) of the Ackermans-Savant sensor (30) are modified to have a high-aspect ratio as taught in Sarantos. APPLE-1003, ¶¶145-146. The HAR photodetectors in the combination would be arranged

MASIMO 2034
Apple v. Masimo
IPR2024-00241

in a circular pattern in the channel between inner ring (43) and outer ring (41) consistent with Ackermans' preferred arrangement, and with Sarantos's teaching of the same. APPLE-1005, 14:60-64 ("In FIG. 15, three HAR photodetector elements 1512 are shown in a ***circular array*** centered on a light source 1508. Similarly, in FIG. 16, four HAR photodetector elements 1612 are arranged in a ***circular array*** about a light source 1608."), 15:24-43, FIGS. 15-16, 18. Figure 15 of Sarantos, for example, shows three HAR photo-detector elements 1512 forming a "circular array" around light source 1508:

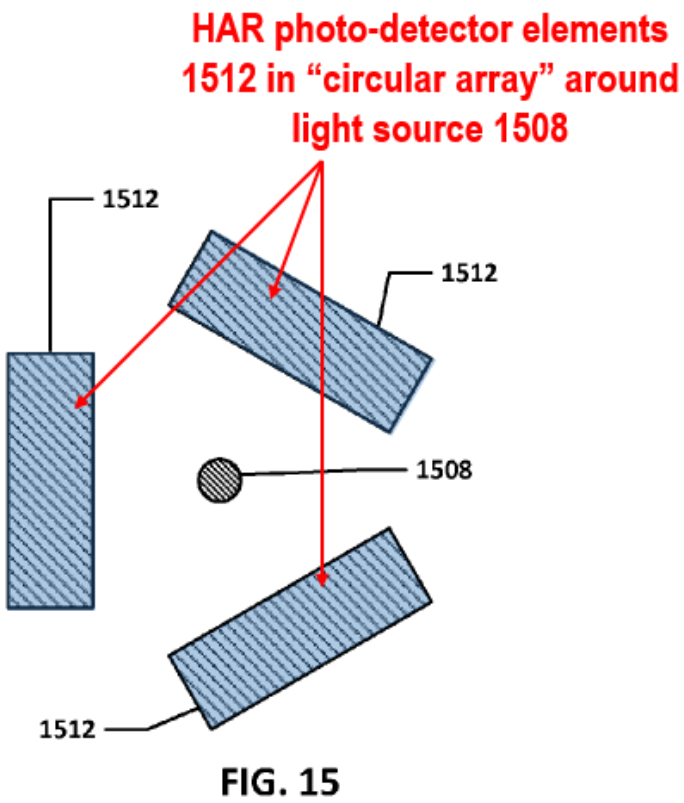

APPLE-1005, FIG. 15 (annotated)

Sarantos further describes how "masking techniques" can be used to better

MASIMO 2034
Apple v. Masimo
IPR2024-00241

control the light exposed to photo-detector elements in a PPG sensor. APPLE-1005, 17:1-51. For example, as illustrated in Figure 22, "black" or otherwise "opaque" in-mold labels 2276 provide masks that "prevent stray light from other sources, e.g., ambient light, from reaching the HAR photodetector elements 2212 and affecting the heart rate signal obtained by the PPG sensor." *Id.*, 17:1-25. In between the in-mold labels 2276 are substantially transparent "window regions 2226" that permit diffuse light reflected from the patient's tissue to reach HAR photo-detector elements 2212. *Id.* "[T]he window regions 2226 are mutually coextensive with their respective HAR photodetector elements 2212," and hence the window regions 2226 form openings for light between the in-mold labels 2276 that have dimensions corresponding to the dimensions of the HAR photodetector elements 2212. *Id.*, 17:45-47; APPLE-1003, ¶147.

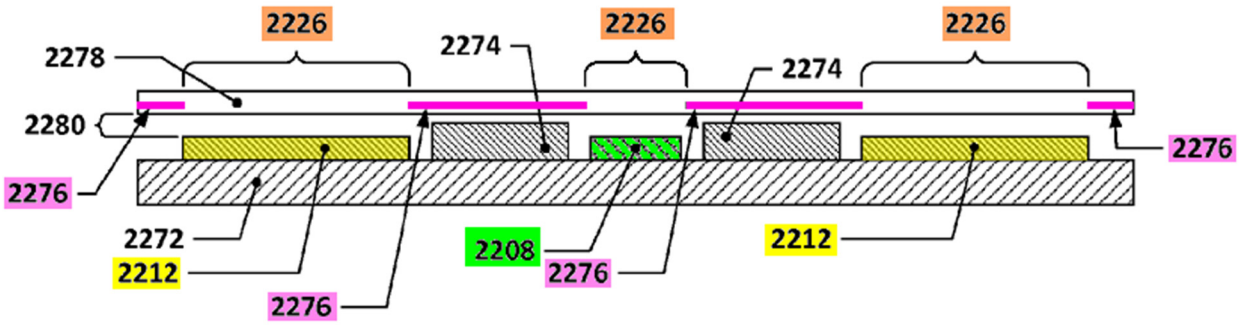

APPLE-1005, Detail of FIG. 22 (annotated)

In the combination, the adhesive as disclosed in Ackermans, or another coating or form of masking, is applied to the base of frame (90) and sensor (10), and the single opening in the adhesive is replaced by multiple smaller openings to

MASIMO 2034
Apple v. Masimo
IPR2024-00241

form respective window regions both for the light emitting unit 20 and for each of the HAR photo-detector elements, where each of the latter openings/window regions is coextensive with its corresponding HAR photo-detector element as taught in Sarantos. APPLE-1003, ¶148.

3. Reasons to combine Ackermans, Savant, and Sarantos

HAR Photo-Detectors

A POSITA would have been motivated to modify Ackermans-Savant in view of Sarantos to incorporate HAR photo-detector elements arranged in a circular array in the channel between inner ring (43) and outer ring (41) to achieve the express benefits of HAR photo-detector elements as expressed in Sarantos. APPLE-1003, ¶149. Sarantos teaches that a "high-aspect-ratio photodetector element may provide a significant improvement in the amount of AC light measureable by a photodetector without incurring a significant power consumption penalty." APPLE-1005, 9:48-57. Accordingly, it would have been obvious to employ HAR photo-detector elements in the combination to increase the amount of light that could be detected, and to increase the sensitivity of the photo-detectors in a power efficient manner. APPLE-1003, ¶149.

Further, a POSITA would have found it obvious to implement HAR photo-detector elements in the combination because doing so merely entails the use of known solutions to improve similar systems and methods in the same way.

MASIMO 2034
Apple v. Masimo
IPR2024-00241

APPLE-1003, ¶150. Here, "when a patent 'simply arranges old elements with each performing the same function it had been known to perform' and yields no more than one would expect from such an arrangement, the combination is obvious." *KSR*, 550 U.S. at 417. The use of Sarantos's teachings to augment Ackermans-Savant would have led to predictable results without significantly altering or hindering the functions performed by the sensor (10). APPLE-1003, ¶150. Indeed, a POSITA would have had a reasonable expectation of success implementing HAR photo-detector elements in the combination, especially since the HAR photo-detectors would be arranged in a circular array consistent with the configurations described in both Ackermans and Sarantos. APPLE-1003, ¶150.

Openings Co-extensive with HAR Photo-Detectors

A POSITA would have been motivated to further modify Ackermans-Savant in view of Sarantos by replacing the single opening in the adhesive with multiple smaller openings (*i.e.*, window regions) coextensive with the HAR photo-detector elements, based on the teachings of Sarantos. APPLE-1003, ¶151. Providing openings in the adhesive co-extensive with HAR photo-detector elements would have improved the ability of sensor (10) to measure the light of interest that is diffused and reflected from the patient's tissue, while blocking stray light from other sources from reaching the photo-detector elements. Sarantos itself expressly

MASIMO 2034
Apple v. Masimo
IPR2024-00241

recognizes the benefits of making areas surrounding the HAR photo-detector elements, noting that "masking may prevent stray light from other sources, e.g., ambient light, from reaching the HAR photodetector elements 2212 and affecting the heart rate signal obtained by the PPG sensor." APPLE-1005, 17:10-17, 17:45-51; APPLE-1003, ¶151.

A POSITA would have found it obvious to substitute the single opening in the adhesive with multiple smaller openings (i.e., window regions) coextensive with the HAR photo-detector elements in the combination because, again, the modification merely entails the use of known solutions to improve similar systems and methods in the same way. APPLE-1003, ¶152; *KSR*, 550 U.S. at 417. The use of Sarantos's teachings to augment the sensor (10) of Ackermans-Savant would have led to predictable results without significantly altering or hindering the functions performed by the sensor (10). APPLE-1003, ¶152. A POSITA would have had a reasonable expectation of success implementing such openings in the adhesive given that it is a simple technical matter to form openings in an adhesive material, and the resulting structure would still permit emitted light to reach the tissue and would still permit diffuse reflected light to reach the photo-detectors. APPLE-1003, ¶152.

4. Analysis

MASIMO 2034
Apple v. Masimo
IPR2024-00241

(a) Claim 13

[13.0] The physiological monitoring device of claim 1, wherein the opening defined in the dark-colored coating comprises a width and a length, and wherein the width is larger than the length.

Sarantos discloses, and the combination provides, high-aspect ratio (HAR) photo-detectors for detecting diffuse light reflected from the tissue measurement site in an optical sensor. APPLE-1003, ¶153. A HAR photo-detector "refers to non-square photodetectors where at least 90% of the photodetector element active area[] … has a maximum first dimension along a first axis that is at least twice as large as a maximum second dimension of the photodetector element along a second axis that is perpendicular or orthogonal to the first axis." APPLE-1005, 9:47-65; *generally id.*, 9:48-10:26, FIGS. 15-16, 18. Sarantos suggests "masking" the interface between the sensor and the tissue measurement site to prevent stray light that was not diffused and reflected from the tissue from reaching the photo-detectors. *Id.*, 17:1-51, FIG. 22. Window regions 2226 in the masking are formed to be coextensive with the HAR photo-detectors, thereby providing openings for diffuse light emitted from the tissue to reach the photo-detectors. *Id.* As described above, it would have been obvious in view of Sarantos to replace Ackermans' single opening in the adhesive with multiple smaller openings (*i.e.*, window regions) coextensive with the HAR photo-detector elements. APPLE-1003, ¶153; *supra*, Section IV.C.2-3. As the opening associated with a given HAR photo-

MASIMO 2034
Apple v. Masimo
IPR2024-00241

detector in the combination is co-extensive with the photo-detector—which itself has a width larger than its length—the opening defined in the opaque adhesive (*i.e.*, a dark-colored coating) would likewise have a width larger than its length. APPLE-1003, ¶¶153-154.

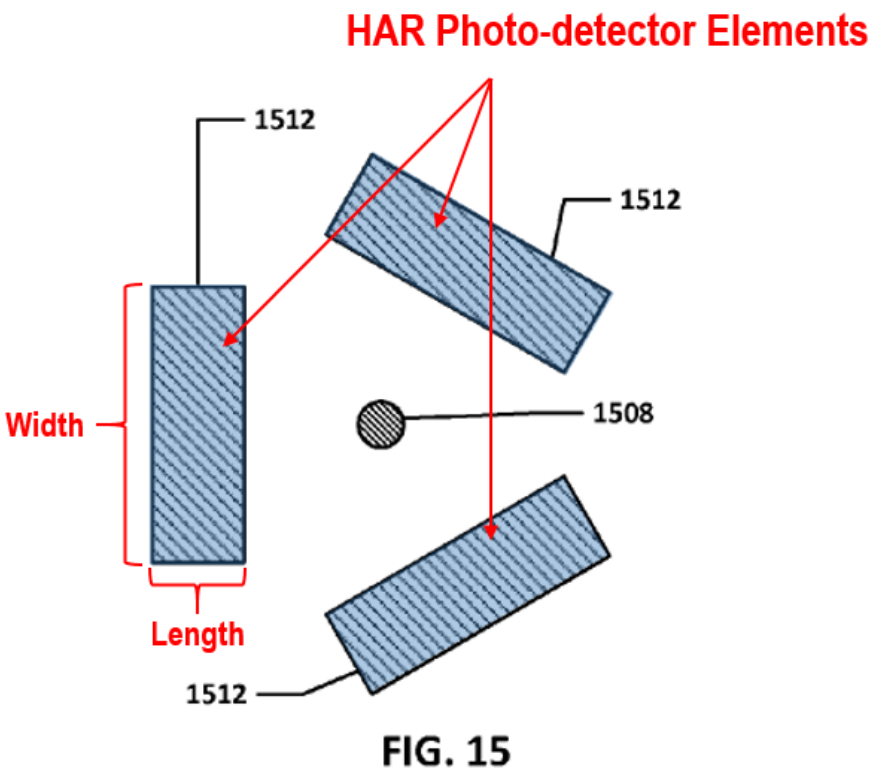

APPLE-1005, FIG. 15 (annotated)

(b) Claim 14

[14.0] The physiological monitoring device of claim 1, wherein the dark-colored coating comprises black.

Ackermans discloses that the adhesive "does not have to be transparent," and provides a dark-colored coating. APPLE-1011, 11:12-15; *supra*, Ground 1A, [1.4]. Further, in the combination, the adhesive provides a mask for stray light

MASIMO 2034
Apple v. Masimo
IPR2024-00241

from reaching the photo-detectors, which Sarantos discloses can be a "black" coating. APPLE-1005, 1:6-16 ("The in-mold label 2276 may be ***black*** or otherwise rendered opaque to light to prevent light from entering or exiting the PPG sensor through the window 2278 except through window regions 2226. In other implementations, other masking techniques, such as a ***painted or silk-screened mask*** applied to the window 2278, may be used. Regardless of which technique is used, the in-mold label 2276 or the masking may prevent stray light from other sources, e.g., ambient light, from reaching the HAR photodetector elements 2212 and affecting the heart rate signal obtained by the PPG sensor."). It would have been obvious to apply Sarantos's suggested use of a black coating in the combination to block stray light from reaching the photo-detectors. APPLE-1003, ¶¶155-156. A POSITA would have known that a black coating would absorb light and block its transmission through the adhesive to the photo-detectors. *Id.* A POSITA would have had a reasonable expectation of success using a black coating on the adhesive in the combination, particularly given that a black coating is consistent with Ackermans' origin suggestion for a non-transparent adhesive. *Id.*

V. PTAB DISCRETION SHOULD NOT PRECLUDE INSTITUTION

A. 314(a) – *Fintiv*

Consistent with Congressional intent, the goals of *Fintiv*, and the Interim

MASIMO 2034
Apple v. Masimo
IPR2024-00241

Guidance issued by Director Vidal on June 21, 2022, Petitioner respectfully asks Board to consider the challenges raised in this Petition. *Apple Inc. v. Fintiv, Inc.*, IPR2020-00019, Paper 11, 6 (PTAB Mar. 20, 2020) (precedential) ("*Fintiv*"); APPLE-1032, 6-7, 9. The only parallel proceeding in which the '745 Patent is at issue is an ITC proceeding and, as Director Vidal noted, the "PTAB will not discretionarily deny petitions based on applying *Fintiv* to a parallel ITC proceeding."[4] APPLE-1032, 7. To be sure, none of the Challenged Claims in this Petition are asserted in the ITC proceeding, and hence the ITC will reach no determination with respect to the validity of any of the claims that the Board would address if IPR is instituted on this Petition.

Moreover, although Apple has every expectation that it will succeed in demonstrating invalidity of the '745 Patent claims presently asserted at the ITC, that outcome would not necessarily preclude Masimo from asserting one or more of the Challenged Claims from this Petition in a future district court action.

As the evidence presented in the instant Petition compellingly demonstrates,

---

[4] Apart from Petitioners' showing that *Fintiv* favors institution, the *Fintiv* framework should not be followed because it is legally invalid. The framework (1) exceeds the Director's authority, (2) is arbitrary and capricious, and (3) was adopted without notice-and-comment rulemaking.

MASIMO 2034
Apple v. Masimo
IPR2024-00241

the Board's institution of an IPR based on the instant Petition would serve to efficiently address issues of invalidity that the ITC cannot and will not resolve, just as the Board's recent review of the related '695 Patent swiftly resolved invalidity of the highly similar claims at issue.[5] APPLE-1032, 3-5 ("where the PTAB determines that the information presented at the institution stage presents a compelling unpatentability challenge, that determination alone demonstrates that the PTAB should not discretionarily deny institution under *Fintiv*"), 9.

For at least these reasons, Petitioner respectfully submits that the Director's Interim Guidance compels evaluation of the instant Petition on its merits, and respectfully requests institution.

B. 314(a) – *General Plastic*

The *General Plastic* factors favor institution under § 314(a). *General*

---

[5] More specifically, the Board invalidated every challenged claim of the '695 Patent. *See* IPR2020-01722 Pap. 28, 26 (PTAB May 5, 2022) ("Petitioner has shown by a preponderance of the evidence that claims 6, 14, and 21 would have been obvious in view of the combined teachings of Sarantos, Mendelson-1991, and Chin"), 29 ("Petitioner has shown by a preponderance of the evidence that claim[s] 6, 14, and 21 of the '695 patent are unpatentable based on the combined teachings of Ackermans and Chin").

MASIMO 2034
Apple v. Masimo
IPR2024-00241

Plastic Industrial Co. Ltd. v. Canon Kabushiki Kaisha, IPR2016-01357, Paper 19 (PTAB Sept. 6, 2017) (precedential as to § II.B.4.i).

Petitioner recently filed IPR petitions challenging a different subset of claims of the '745 Patent in IPR2022-01291 and IPR2022-01292, but this is not a situation involving "[m]ultiple, staggered petitions challenging the same patent ***and same claims***" as contemplated by *General Plastic*. *Id.*, 17; *see also Google, LLC v. Jenam Tech., LLC*, IPR2021-00867, Paper 11 at 5 (PTAB Nov. 9, 2021). Indeed, the present Petition challenges only claims 2-6, 8, 10-14, 17, 19, and 21-26, while the -01291 and -01292 petitions challenged only claims 1, 9, 15, 18, 20, and 27—*i.e.*, mutually exclusive sets of claim challenges. Factor 1 thus strongly favors institution.

Moreover, the present Petition is being filed within five weeks of the -01291 and -01292 petitions—and just over three weeks after the Board issued notices according filing dates to those petitions. Counsel for the Patent Owner has only recently entered appearances in the -01291 and -01292 IPR proceedings, and the preliminary response and institution deadlines are still months away. Factors 3 and 4 again strongly favor institution.

Factors 2, 5, 6, and 7 are of little moment in the present circumstances. While this Petition relies on prior art that was previously cited in the -01291 and -01292 petitions, the art here is applied against different claims. None of the

MASIMO 2034
Apple v. Masimo
IPR2024-00241

challenges in this Petition overlap or are serial to the challenges in the -01291 or -01292 petitions. The challenges in the Petition also will not present an undue burden on the resources of the Board, nor will they frustrate the Board's ability to reach a final determination in any of the proceedings within a year of institution. Not only is this Petition being filed closely in time to the earlier petitions, but the additional burden presented by the challenges in this Petition is inordinately low. Indeed, the Challenged Claims in this Petition all depend from one of the claims challenged in the -01292 petition, and this Petition relies on the same prior art combinations and mappings to address the same limitations of the base claims from which the Challenged Claims here depend. The additional issues raised in this Petition thus stem primarily from the additional limitations recited in dependent claims of the '745 Patent.

For at least these reasons, Petitioner respectfully submits that the *General Plastic* factors strongly weigh against exercise of the Board's discretion to deny institution under 314(a).

C. 325(d) – *Advanced Bionics*

Advanced Bionics and the *Becton* factors strongly favor institution. *Advanced Bionics LLC v. MED-EL Elektromedizinische Gerate GmbH*, IPR2019-01469 Pap. 6 (PTAB Feb. 13, 2020) ("*Advanced Bionics*") (precedential); *Becton,*

MASIMO 2034
Apple v. Masimo
IPR2024-00241

Dickinson and Co. v. B. Braun Melsungen AG, IPR2017-01586 Pap. 8 (PTAB Dec. 15 2017) ("Becton") (precedential).

Under the *Advanced Bionics* framework, discretionary denial under Section 325(d) is appropriate only if a condition in the framework's first prong is satisfied, and if there is no showing of material error under the second prong. *Advanced Bionics LLC v. MED-EL Elektromedizinische Gerate GmbH*, IPR2019-01469 Pap. 6 (PTAB Feb. 13, 2020). As stated in *Advanced Bionics*, those two prongs are:

> (1) whether the same or substantially the same art previously was presented to the Office or whether the same or substantially the same arguments previously were presented to the Office; and
> (2) if either condition of [the] first part of the framework is satisfied, whether the petitioner has demonstrated that the Office erred in a manner material to the patentability of challenged claims.

Advanced Bionics., 8-10.

First, and as explained at length above (*supra*, §IV.D.), ***the examiner never issued a rejection during the '745 Patent's prosecution***, and instead issued a notice of allowance five weeks after the '772 Application's filing. APPLE-1002, 147-153.

Although the face of the '745 Patent lists hundreds of other references cited by Masimo, Masimo failed to cite the Ackermans and Venkatraman references applied in this Petition to the examiner, despite being in possession of Apple's

MASIMO 2034
Apple v. Masimo
IPR2024-00241

earlier IPR petitions challenging claims of the related ’695 Patent based on those same references. *See*, *generally*, IPR2020-01722, -01723. Indeed, there is no indication in the ’745 Patent’s file history that the examiner was even aware of, let alone substantively considered, any of the prior art applied in this Petition prior to allowing the ’772 Application. *See*, *generally*, APPLE-1002. The Ackermans, Venkatraman, Sarantos, and Savant references applied in this Petition are new, noncumulative prior art.

Because the ’745 Patent’s prosecution did not involve negotiation between the applicant and the examiner regarding the teachings of the prior art applied in the instant Petition, the instant Petition’s art and arguments cannot be said to be the same as, or substantially similar to, art and arguments previously presented to the Office in connection with the ’745 Patent. *See*, *generally*, APPLE-1002.

Indeed, neither condition of the first prong of the *Advanced Bionics* framework is met, and there is no need to reach the second prong to resolve against discretionary denial under Section 325(d). *See*, *e.g.*, *Oticon Medical AB et. al. v. Cochlear Ltd.*, IPR2019-00975 Pap. 15, 20 (PTAB Oct. 16, 2019) (precedential) (“There is new, noncumulative prior art asserted in the Petition…[f]or at least this reason, we determine not to exercise our discretion under § 325(d)”).

For at least these reasons, Petitioner respectfully requests institution of the instant Petition.

MASIMO 2034
Apple v. Masimo
IPR2024-00241

VI. MANDATORY NOTICES UNDER 37 C.F.R. §42.8

A. Real Parties-In-Interest Under 37 C.F.R. §42.8(b)(1)

Petitioner, Apple Inc., is the real party-in-interest.

B. Related Matters Under 37 C.F.R. §42.8(b)(2)

Petitioner is not aware of any disclaimers, reexamination certificates or petitions for *inter partes* review for the '745 Patent.

The '745 Patent is the subject of *Masimo Corporation, et al. v. Apple Inc.*, ITC Inv. No. 337-TA-1276. APPLE-1031. This Petition is being filed concurrently with another petition for IPR of the '745 Patent (IPR2022-01465), and is being filed within five weeks of Apple's earlier IPR petitions in IPR2022-01291 and IPR2022-01292 that challenged a different subset of claims of the '745 Patent.[6] Apple has also recently filed IPRs challenging ITC-asserted patents in IPR2022-01271, IPR2022-01272, IPR2022-01273, IPR2022-01274, IPR2022-01275, IPR2022-01276, IPR2022-01299, and IPR2022-01300.

Masimo earlier asserted multiple patents against Apple in the U.S. District Court for the Central District of California (CDCA) (Case No. 8:20-cv-00048),

---

[6] Pursuant to the Trial Practice Guide, both petitions for IPR of the '745 Patent are being filed with a paper providing a succinct explanation of the differences between the petitions, why the issues addressed by the differences are material, and why the Board should exercise its discretion to institute both petitions.

MASIMO 2034
Apple v. Masimo
IPR2024-00241

including the related '695 Patent. Apple previously challenged the CDCA-asserted patents in IPR2020-01520, IPR2020-01521, IPR2020-01722, IPR2020-01536, IPR2020-01537, IPR2020-01538, IPR2020-01539, IPR2020-01713, IPR2020-01714, IPR2020-01715, IPR2020-01716, IPR2020-01723, IPR2020-01737, IPR2020-01737, IPR2021-00195, IPR2021-00208, and IPR2021-00209.

The Board subsequently invalidated '695 Patent claims 6, 14, and 21 in *Apple Inc. v. Masimo Corp.*, IPR2020-01722 Pap. 29, 2 (PTAB May 5, 2022), after Patent Owner disclaimed the remaining claims of the '695 Patent following institution of the IPR.

C. Lead And Back-Up Counsel Under 37 C.F.R. §42.8(b)(3)

Petitioner provides the following designation of counsel.

LEAD COUNSEL	BACK-UP COUNSEL
W. Karl Renner, Reg. No. 41,265 Fish & Richardson P.C. 3200 RBC Plaza 60 South Sixth Street Minneapolis, MN 55402 Tel: 202-783-5070 Fax: 877-769-7945 Email: IPR50095-0045IP4@fr.com	Nicholas Stephens, Reg. No. 74,320 Daniel D. Smith, Reg No. 71,278 Andrew B. Patrick, Reg. No. 63,471 3200 RBC Plaza 60 South Sixth Street Minneapolis, MN 55402 Tel: 202-783-5070 Fax: 877-769-7945 PTABInbound@fr.com

D. Service Information

Please address all correspondence and service to the address listed above. Petitioner consents to electronic service by email at IPR50095-0045IP4@fr.com.

MASIMO 2034
Apple v. Masimo
IPR2024-00241

VII. PAYMENT OF FEES – 37 C.F.R. §42.103

Petitioner authorizes the Office to charge Deposit Account No. 06-1050 for the petition fee set in 37 C.F.R. §42.15(a) and for any other required fees.

VIII. CONCLUSION

Accordingly, Petitioner respectfully requests IPR of the Challenged Claims.

Respectfully submitted,

Dated: August 26, 2022

/Nicholas W. Stephens/
W. Karl Renner, Reg. No. 41,265
Nicholas Stephens, Reg. No. 74,320
Daniel D. Smith, Reg No. 71,278
Andrew B. Patrick, Reg. No. 63,471
Fish & Richardson P.C.
3200 RBC Plaza, 60 South Sixth Street
Minneapolis, MN 55402

Tel: 202-783-5070
Fax: 877-769-7945

(Control No. IPR2022-01466)

Attorneys for Petitioner

MASIMO 2034
Apple v. Masimo
IPR2024-00241

CERTIFICATION UNDER 37 CFR § 42.24

Under the provisions of 37 CFR § 42.24(d), the undersigned hereby certifies that the word count for the foregoing Petition for *Inter partes* Review totals 13,091 words, which is less than the 14,000 allowed under 37 CFR § 42.24.

Dated: August 26, 2022

/Nicholas W. Stephens/

W. Karl Renner, Reg. No. 41,265
Nicholas Stephens, Reg. No. 74,320
Daniel D. Smith, Reg No. 71,278
Andrew B. Patrick, Reg. No. 63,471
Fish & Richardson P.C.
3200 RBC Plaza, 60 South Sixth Street
Minneapolis, MN 55402

Tel: 202-783-5070
Fax: 877-769-7945

Attorneys for Petitioner

MASIMO 2034
Apple v. Masimo
IPR2024-00241

CERTIFICATE OF SERVICE

Pursuant to 37 CFR §§ 42.6(e)(4)(i) *et seq.* and 42.105(b), the undersigned certifies that on August 26, 2022, a complete and entire copy of this Petition for *Inter Partes* Review and all supporting exhibits were provided via Federal Express, to the Patent Owner by serving the correspondence address of record as follows:

KNOBBE, MARTENS, OLSON & BEAR, LLP (MASIMO)
MASIMO CORPORATION
2040 MAIN STREET
FOURTEENTH FLOOR
IRVINE, CA 92614

/Michael Stanwyck/
Michael Stanwyck
Fish & Richardson P.C.
60 South Sixth Street, Suite 3200
Minneapolis, MN 55402
(617) 956-5938