IN THE UNITED STATES DISTRICT COURT
FOR THE DISTRICT OF DELAWARE

APPLE INC., *Plaintiff,* v. MASIMO CORPORATION and SOUND UNITED, LLC, *Defendants.*	C.A. No. 22-1378-MN-JLH **JURY TRIAL DEMANDED**
MASIMO CORPORATION and CERCACOR LABORATORIES, INC., *Counter-Claimants,* v. APPLE INC. *Counter-Defendant.*	

JOINT CLAIM CONSTRUCTION BRIEF
REGARDING MASIMO ASSERTED PATENTS

TABLE OF CONTENTS

Page No.

I. INTRODUCTION 1

A. Masimo 1

B. Apple 1

II. BACKGROUND 1

A. U.S. Patent No. 8,190,223 (the "'223 Patent") 1

1. Masimo 1

2. Apple 2

B. U.S. Patent No. 10,736,507 (the "'507 Patent") 2

1. Masimo 2

2. Apple 3

C. U.S. Patent No. 10,984,911 (the "'911 Patent") 4

1. Masimo 4

2. Apple 4

III. AGREED-UPON CONSTRUCTIONS 4

IV. DISPUTED CONSTRUCTIONS 5

A. "blood parameter" ('223 Patent: Claims 27, 28, 34, 36, 43) [Term M-1] 5

1. Masimo's Opening Position 5

2. Apple's Answering Position 8

3. Masimo's Reply Position 11

4. Apple's Sur-Reply Position 14

B. "measured value" ('223 Patent: Claims 15, 21, 27-28, 36, 43) [Term M-2] 16

1. Masimo's Opening Position 16

MASIMO 2038
Apple v. Masimo
IPR2024-00241

TABLE OF CONTENTS
(*cont'd*)

Page No.

2. Apple's Answering Position 17

3. Masimo's Reply Position 22

4. Apple's Sur-Reply Position 23

C. "generally capable of displaying" ('223 Patent: Claim 21) [Term M-3] 25

1. Masimo's Opening Position 25

D. "mobile measurement" ('507 Patent: Claim 13) [Term M-4] 27

1. Masimo's Opening Position 27

2. Apple's Answering Position 29

3. Masimo's Reply Position 31

4. Apple's Sur-Reply Position 33

E. "one or more signals" ('507 Patent: Claim 13) [Term M-5] 34

1. Masimo's Opening Position 34

2. Apple's Answering Position 35

3. Masimo's Reply Position 38

4. Apple's Sur-Reply Position 39

F. "the processing board in data communication with the optical sensor and a mobile computing device including a display" ('507 Patent: Claim 13) [Term M-6] 40

1. Masimo's Opening Position 40

2. Apple's Answering Position 41

3. Masimo's Reply Position 44

4. Apple's Sur-Reply Position 45

MASIMO 2038
Apple v. Masimo
IPR2024-00241

TABLE OF CONTENTS
(*cont'd*)

Page No.

G. "via a processing board…receiving…processing…outputting" ('507 Patent: Claim 13) [Term M-7] 46

1. Masimo's Opening Position 46

2. Apple's Answering Position 47

3. Masimo's Reply Position 50

4. Apple's Sur-Reply Position 52

H. "via an application…generating…displaying…displaying" ('507 Patent: Claim 13) / "via the application" ('507 Patent: Claims 14, 16, 17, 20) [Term M-8] 53

1. Masimo's Opening Position 53

2. Apple's Answering Position 54

3. Masimo's Reply Position 55

4. Apple's Sur-Reply Position 57

I. "cavity" ('911 Patent: Claims 1, 10) [Term M-9] 57

1. Masimo's Opening Position 57

2. Apple's Answering Position 58

3. Masimo's Reply Position 60

4. Apple's Sur-Reply Position 62

J. "a light block [at least partially] surrounding the at least one detector" ('911 Patent: Claims 1, 10, 19) [Term M-10] 62

1. Masimo's Opening Position 62

2. Apple's Answering Position 64

3. Masimo's Reply Position 66

4. Apple's Sur-Reply Position 68

MASIMO 2038
Apple v. Masimo
IPR2024-00241

TABLE OF CONTENTS
(*cont'd*)

Page No.

K. "a top of the [shoebox structure / light block]" ('911 Patent: Claims 1, 19) [Term M-11] 68

1. Masimo's Opening Position 69

2. Apple's Answering Position 70

3. Masimo's Reply Position 74

4. Apple's Sur-Reply Position 75

L. "opening" ('911 Patent: Claims 1, 19, 20) [Term M-12] 77

1. Masimo's Opening Position 77

2. Apple's Answering Position 79

3. Masimo's Reply Position 81

4. Apple's Sur-Reply Position 83

V. CONCLUSION 84

MASIMO 2038
Apple v. Masimo
IPR2024-00241

TABLE OF AUTHORITIES

Page No(s).

Am. Med. Sys. v. Biolitec, Inc.,
618 F.3d 1354 (Fed. Cir. 2010)..... 24, 26

Ateliers de la Haute-Garonne v. Broetje Automation-USA Inc.,
No. 1:09-cv-00598, 2011 WL 722937 (D. Del. 2011)..... 62

Baldwin Graphics Sys. v. Sibert, Inc.,
512 F.3d 1338 (Fed. Cir. 2008)..... *passim*

Becton, Dickinson & Co. v. Tyco Healthcare Grp., LP,
616 F.3d 1249 (Fed. Cir. 2010)..... *passim*

Bio-Rad Lab'ys, Inc. v. 10X Genomics Inc.,
967 F.3d 1353 (Fed. Cir. 2020)..... 28

CAE Screenplates Inc. v. Heinrich Fiedler GmbH & Co. KG,
224 F.3d 1308 (Fed. Cir. 2000)..... 7

Cont'l Circuits LLC v. Intel Corp.,
915 F.3d 788 (Fed. Cir. 2019)..... 59

Convolve, Inc. v. Compaq Computer Corp.
812 F.3d 1313 (Fed. Cir. 2016)..... *passim*

Core Optical Techs., LLC v. Infinera Corp.,
No. SACV 17-00548 AG (JPRx), 2018 WL 11344751
(C.D. Cal. May 9, 2018) 25

Diebold Nixdorf, Inc. v. Hyosung Tns, Inc.,
No. 19-1695-LPS, 2021 WL 678672 (D. Del. Feb. 22, 2021)..... 25

Eko Brands, LLC v. Adrian Rivera Mayez Enters., Inc.,
946 F.3d 1367 (Fed. Cir. 2020)..... 40, 44

Endo Pharms. Inc. v. Watson Labs., Inc.,
No. 2:13-cv-192, 2014 WL 2859349 (E.D. Tex. June 23, 2014) 24

HID Global Corp. v. Vector Flow, Inc.,
No. 1:21-cv-01769, 2023 WL 2655117 (D. Del. Mar. 27, 2023)..... 66

IGT v. Bally Gaming Intern., Inc.,
659 F.3d 1109 (Fed. Cir. 2011)..... 69

MASIMO 2038
Apple v. Masimo
IPR2024-00241

TABLE OF AUTHORITIES
(*cont'd*)

Page No(s).

Indacon, Inc. v. Facebook, Inc.,
824 F.3d 1352 (Fed. Cir. 2016)..... 65, 66

InterDigital Comms., LLC v. ITC,
690 F.3d 1318 (Fed. Cir. 2012)..... 6, 34, 38

Johnson Worldwide Associates, Inc. v. Zebco Corp.,
175 F.3d 985 (Fed. Cir. 1999).....*passim*

Kraft Foods, Inc. v. Int'l Trading Co.,
203 F.3d 1362 (Fed. Cir. 2000)..... 37

Kyocera Senco Indus. Tools Inc. v. USITC,
22 F.4th 1369 (Fed. Cir. 2022) 40

L'Oreal S.A. v. Johnson & Johnson Consumer Cos., Inc.,
No. 12-98-GMS, 2013 WL 3788803 (D. Del. Jul. 19, 2013) 26

Mars, Inc. v. TruRx LLC,
No. 6:13-cv-526, 2015 WL 11233455 (E.D. Tex. Feb. 3, 2015)..... 24

Microsoft Corp. v. Multi-Tech Sys., Inc.,
357 F.3d 1340 (Fed. Cir. 2004)..... 42

Nautilus, Inc. v. Biosig Instruments, Inc.,
572 U.S. 898 (2014)..... 25

Omega Eng'g, Inc. v. Raytek Corp.,
334 F.3d 1314 (Fed. Cir. 2003)..... 40

Oracle Corp. v. Parallel Networks,
LLP, No. CIV.06-414-SLR, 2008 WL 5156117 (D. Del. Dec. 4, 2008)..... 60

Pause Tech. LLC v. TiVo Inc.,
419 F.3d 1326 (Fed. Cir. 2005)..... 76, 77

Phillips v. AWH Corp.,
415 F.3d 1303 (Fed. Cir. 2005)..... 34, 60, 63, 77

Princeton Digital Image Corp. v. Amazon.com, Inc.,
No. 13-237-LPS, 2019 WL 351258 (D. Del. Jan. 29, 2019) 25

MASIMO 2038
Apple v. Masimo
IPR2024-00241

TABLE OF AUTHORITIES
(*cont'd*)

Page No(s).

Rotatable Techs. LLC v. Motorola Mobility LLC,
567 F. App'x 941 (Fed. Cir. 2014) 28

Salazar v. AT&T Mobility LLC
64 F.4th 1311 (Fed. Cir. 2023) ..... *passim*

Storage Tech. Corp. v. Cisco Sys., Inc.,
329 F.3d 823 (Fed. Cir. 2003)..... 28, 29, 31

Thorner v. Sony Comp. Entm't America LLC,
669 F.3d 1362 (Fed. Cir. 2012)..... 34, 38

TomTom, Inc. v. Adolph,
790 F.3d 1315 (Fed. Cir. 2015)..... 24

Unwired Planet LLC v. Google Inc.,
111 F. Supp. 3d 1120 (D. Nev. 2015)..... 24

In re Varma,
816 F.3d at 1363 ..... 47, 48, 51, 54

Vitronics Corp. v. Conceptronic, Inc.,
90 F.3d 1576 (Fed. Cir. 1996)..... 6, 81, 82

***** All emphases and annotations are added unless indicated otherwise. *****

MASIMO 2038
Apple v. Masimo
IPR2024-00241

EXHIBIT LIST

Exhibit	Party	Description
1	Masimo	[Filed Under Seal] Excerpts from June 6-10, 2022 Transcript of Open Sessions, *In the Matter of Certain Light-Based Physiological Measurement Devices and Components Thereof,* Inv. No. 337-TA-1276
2	Masimo	Design of Pulse Oximeters, J.G. Webster (ed.) 1997
3	Masimo	Webster's College Dictionary, definition of "generally"
4	Masimo	The New Oxford American Dictionary, definition of "generally"
5	Masimo	Oxford Dictionary of English, definition of "mobile"
6	Masimo	Collins English Dictionary, definition of "cavity"
7	Masimo	U.S. Patent No. 10,912,501
8	Masimo	U.S. Patent No. 10,687,718
9	Masimo	U.S. Patent Pub. US 2021/0093237 A1
10	Masimo	U.S. Patent Pub. US 2017/0325744 A1
11	Masimo	U.S. Patent No. 10,043,485
12	Masimo	U.S. Patent No. 10,702,211
13	Masimo	Declaration of Vijay K. Madisetti, Ph.D. in Support of Masimo's Opening Construction Brief with Exhibit A
45	Masimo	Declaration of Vijay K. Madisetti, Ph.D. in Support of Defendants' and Counterclaimants' Reply Claim Construction Brief
46	Masimo	[Filed Under Seal] Excerpts from Expert Report of Majid Sarrafzadeh, Ph.D. regarding Invalidity for U.S. Patent Nos. 10,687,745 and 7,761,127, *In the Matter of Certain Light-Based Physiological Measurement Devices and Components Thereof,* Inv. No. 337-TA-1276
47	Masimo	[Filed Under Seal] Excerpts from Expert Report of Dr. Steven Warren regarding Invalidity for U.S. Patent Nos. 10,912,501, 10,912,502 and 10,945,648, *In the Matter of Certain Light-Based Physiological Measurement Devices and Components Thereof,* Inv. No. 337-TA-1276
1	Apple	U.S. Patent No. 8,190,223

MASIMO 2038
Apple v. Masimo
IPR2024-00241

Exhibit	Party	Description
8	Apple	U.S. Patent No. 10,736,507
10	Apple	Excerpts of US 9,877,650 File History
15	Apple	U.S. Patent Pub. US 2011/0077473 A1
17	Apple	U.S. Patent No. 10,984,911
19	Apple	Excerpts of US 10,984,911 File History
20	Apple	U.S. Patent No. 6,580,086
23	Apple	Dorland's Illustrated Medical Dictionary, definition of "parameter"
24	Apple	American Heritage College Dictionary, definitions of "opening," "top" and "value"
25	Apple	Merriam-Webster's Collegiate Dictionary, definitions of "cavity" and "value"
26	Apple	Oxford American Dictionary, definition of "cavity"
27	Apple	McGraw-Hill Dictionary of Scientific and Technical Terms, excerpt
28	Apple	Wiley Electrical and Electronics Engineering Dictionary, excerpt
29	Apple	McGraw-Hill Dictionary of Electrical and Computer Engineering, excerpt
30	Apple	Collins Dictionary, definition of "opening" and "top"
31	Apple	Webster's New World Dictionary, Second Edition, definition of "opening"
32	Apple	Oxford Dictionary of Biochemistry & Molecular
33	Apple	Declaration of Steven Warren, Ph.D. Regarding Claim Construction with Appendix A
34	Apple	[Filed Under Seal] Masimo Corporation and Cercacor Labs., Inc's Responses to Apple Inc's Initial Invalidity Contentions with Appendices
48	Apple	Sur-Reply Declaration of Steven Warren, Ph.D. Regarding Claim Construction

MASIMO 2038
Apple v. Masimo
IPR2024-00241

I. INTRODUCTION

A. Masimo

Apple argues that twelve terms and phrases from the Masimo Asserted Patents require construction. But these terms and phrases are readily understood and require no construction. Apple argues for narrow constructions to manufacture noninfringement arguments. Nothing in the intrinsic record supports deviating from the plain and ordinary meaning of these terms and phrases.

B. Apple

The parties dispute the meaning of several claim terms in three of Masimo's five asserted patents. Apple's claim constructions reflect the ordinary meaning of these terms and the intrinsic evidence. Masimo contests the ordinary meanings of these terms in ways that confirm the existence of significant disputes regarding claim scope; however, Masimo fails to disclose competing constructions of its own or has belatedly disclosed them for the first time in its opening brief. Masimo's overbroad interpretations do not comport with—and outright contradict—the intrinsic evidence. Accordingly, the Court should adopt Apple's well-supported constructions.[1]

II. BACKGROUND

A. U.S. Patent No. 8,190,223 (the "'223 Patent")

1. Masimo

The '223 Patent is directed to a patient monitor that measures at least two physiological parameters. '223 Patent at Abstract. For a small monitor, the display may have insufficient space to display all the parameters being measured by the device at the same time. *Id.* at 3:10-14, 10:6-9. To address this problem, the '223 Patent describes a device that, on its display, replaces a first

[1] Masimo proposed all of its "plain and ordinary" constructions of its terms for the first time in its opening brief. Masimo never proffered them during the parties' claim construction exchange.

MASIMO 2038
Apple v. Masimo
IPR2024-00241

physiological parameter being displayed with a second physiological parameter. *Id.* at 3:10-17, 3:49-51, 10:4-12. In some embodiments, the device replaces one parameter with another when the parameter passes an alarm threshold. *Id.* at 3:44-51.

2. Apple

The ’223 patent is directed to a monitor that detects and analyzes light to determine measured values of either blood parameters or physiological parameters (depending on the claim), and then displays those values at a particular display location. Apple Ex. 1, Cls. 15, 21, 27, 28. Because of limited display space, the claimed patient monitor replaces the display of the measured value of the first parameter with a display of a measured value of the second parameter in the same display location based on a user input button or the occurrence of an alarm, *i.e.*, when the parameter passes a predetermined threshold value. *Id*.

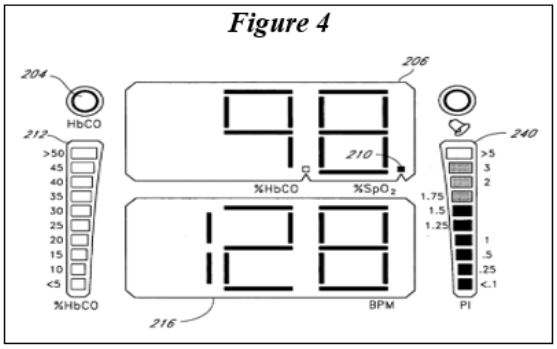

B. U.S. Patent No. 10,736,507 (the “’507 Patent”)

1. Masimo

The ’507 Patent is directed to a patient monitor that connects to mobile devices. ’507 Patent at 1:20-25. In some embodiments, the patient monitor includes a sensor that connects to a processing module which then connects to a mobile device. *Id.* at FIG. 1A, 3:57-62, 4:65-5:14. The processing module receives signals from the sensor, processes the signals, calculates measurement values, and then sends them to the mobile device. *Id.* at 4:65-5:14. The mobile device contains “software applications for managing the data and sensor.” *Id.* at 10:43-46. These applications can display the measurement value on the mobile device and provide a user interface for interacting with the application. *Id.* at 10:35-46. Figure 1A shows this configuration:

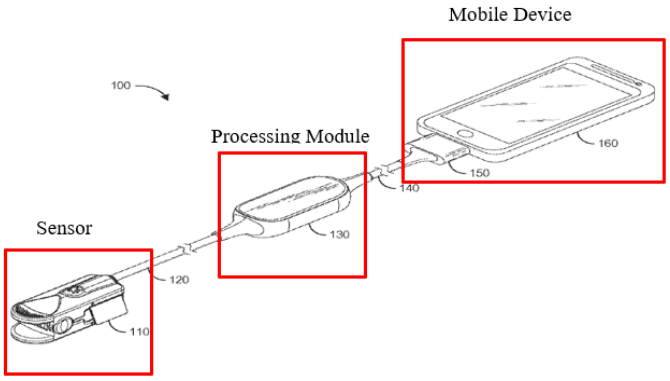

Id. at FIG. 1A. The '507 Patent further explains that the processing module can comprise one or more processing boards which perform the functions of the module, such as an analog processing board and a digital processing board. *Id.* at FIG. 1C, 9:1-6, 9:62-65.

2. <u>Apple</u>

The '507 patent is directed to a method of collecting, analyzing, and displaying data, namely a "mobile measurement of oxygen saturation (SpO_2)." Apple Ex. 8, Cl. 13. An ***optical sensor*** detects and outputs signals to a ***processing board***. *Id.* That ***processing board*** receives those detected signals, processes them to generate SpO_2 measurement values, and outputs those values to a ***mobile computing device*** for display. *Id.*, 6:1-7; *see also id.*, Fig. 1A. The ***mobile computing device*** receives the measurement values, generates a graphical user interface, displays the SpO_2 measurement values in one display portion, and displays user inputs in another display portion. *Id.*, Cl. 13.

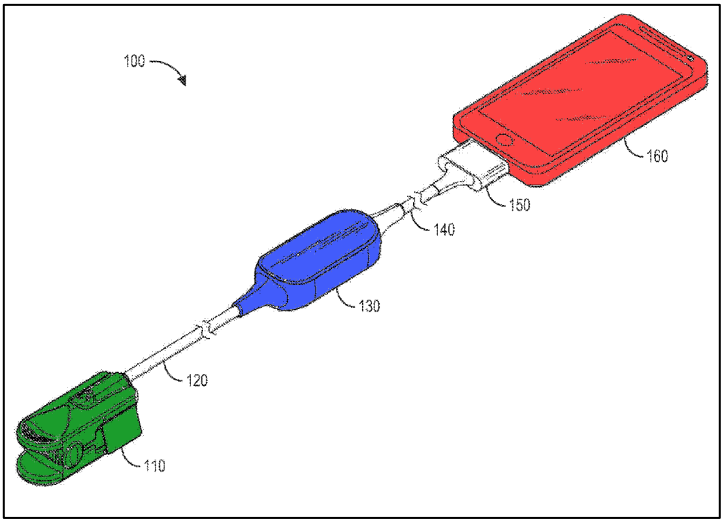

MASIMO 2038
Apple v. Masimo
IPR2024-00241

C. U.S. Patent No. 10,984,911 (the "'911 Patent")

1. Masimo

The '911 Patent is directed to improving the accuracy of a noninvasive physiological monitoring device that relies on the measurement of light passing through the tissue. *See, e.g.*, '911 Patent at FIGS. 1, 4, 46, 5:34-60. In the noninvasive monitoring devices at issue, one source of inaccuracy is called "light piping." Masimo Ex. 1 at 100:14-101:5. Light piping refers to light that passes from the device's emitter directly to its detector without first passing through tissue, as identified by the black arrows below. '911 Patent at 6:45-47.

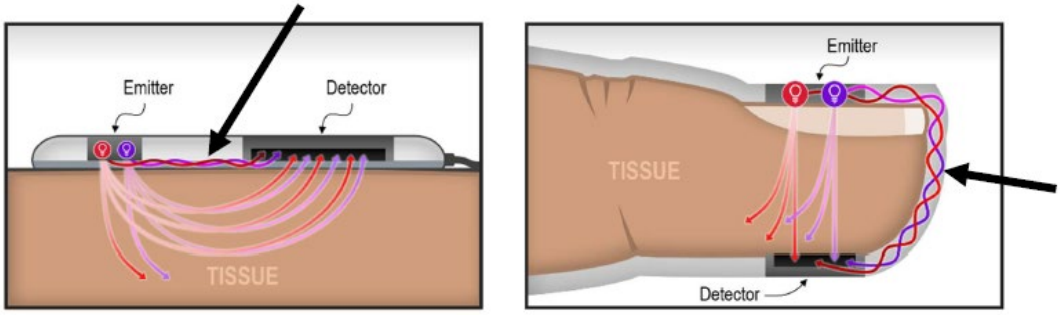

The '911 Patent describes reducing light piping by introducing a light block that surrounds the detector. *Id.* at FIGS. 32A-H, 46, 15:14-23. The light block can prevent unwanted light from the emitter that has not passed through the tissue from "piping" directly to the detector. *Id.* at FIGS. 32A-H, 15:14-23. The patent also describes an opening or window that allows attenuated light (light that has passed through tissue) to reach the detector. *Id.*

2. Apple

The '911 patent is directed to a specific type of physiological monitoring device that has light-emitting diodes (LEDs), detectors, a "light block," and other specific structures in specific configurations and arrangements. Apple Ex. 17, Cls. 1, 10, 19. The device has at least three LEDs recessed into a cavity as well as detector(s) that detect light that has passed through tissue. *Id.*

The device also has a "light block" that both surrounds the device's detectors and has a recited top. *Id.* In the device, the top of the "light block" has only one alleged opening and/or there is an electromagnetic interference shield position between the LEDs and the detector(s). *Id.*

Figure 32B: "perspective top" view

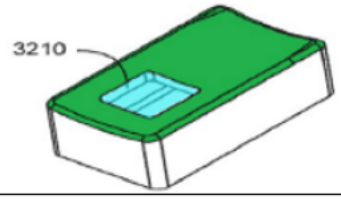

III. AGREED-UPON CONSTRUCTIONS

The following chart identifies the terms/phrases of the Masimo Asserted Patents for which the parties have agreed upon a construction, as well as the parties' agreed-upon constructions.

Patent(s)	Term(s)	Agreed Upon Constructions
'743	shape an output light pattern (Claims 1, 14)	change the shape (not just the size) of the light pattern that exits the optical transmission material from the shape of the light pattern received by it
'159	second shape (Claims 1, 19)	shape different from the first shape (not just a change in size)

IV. DISPUTED CONSTRUCTIONS

A. "blood parameter" ('223 Patent: Claims 27, 28, 34, 36, 43) [Term M-1]

Masimo's Proposal	Apple's Proposal
Plain and ordinary meaning	concentration of a constituent in blood

1. Masimo's Opening Position

A jury will readily understand the phrase "blood parameter" without further explanation. The claims and specification use "blood parameter" according to its plain and ordinary meaning—any parameter of circulating blood in the body. Masimo Ex. 13, Madisetti Decl., ¶¶37-42. Apple argues "blood parameter" should be limited to a "concentration of a constituent in blood." But the intrinsic evidence does not support such a narrow meaning. Rather, the intrinsic evidence shows "blood parameter" encompasses determinations of various characteristics, such as pulse rate and plethysmographic ("PPG") waveforms, which are ***not*** concentrations of any constituent.

MASIMO 2038
Apple v. Masimo
IPR2024-00241

The specification describes using pulse oximetry to determine oxygen saturation, pulse rate, and PPG waveforms. The specification explains that "'pulse oximetry' as used herein encompasses its broad ordinary meaning known to one of skill in the art, which includes at least those noninvasive procedures for measuring parameters of circulating blood through spectroscopy." '223 Patent at 2:26-30. It further explains that "pulse oximetry" measures the light absorbed "by pulsatile arterial blood flowing within the tissue site" to determine "measurements for SpO_2 [i.e., oxygen saturation], pulse rate, and can output representative plethysmographic [PPG] waveforms." *Id.* at 2:16-26. The specification also repeatedly depicts devices displaying parameters measured from blood, including oxygen saturation, pulse rate, and PPG waveforms. *See, e.g.*, *id.* at FIGS. 4-6, 9-10, 11A-H.

At least pulse rate and PPG determinations are not "concentrations," i.e., the amount of a parameter in a volume, and are not related to any "constituent in blood." *See, e.g.*, '223 Patent at 6:2-5 (explaining that only some parameters are reported as a "concentration in g/dL"). Pulse rate and PPG waveforms are not concentrations of any constituent. Moreover, oxygen saturation is a ***percentage***. A measurement of oxygen "concentration" ordinarily would be the amount of oxygen in a volume of blood (e.g., g/dL). Oxygen saturation, however, is typically the percentage of oxygenated red blood cells (hemoglobin) compared to nonoxygenated red blood cells. Masimo Ex. 2 at 23-25, 59; *see also* '223 Patent at 6:2-5 (explaining certain parameters are reported as a "percentage, often referred to as saturation"). Thus, Apple appears to be attempting to exclude three uses of pulse oximetry explained in the specification, namely measuring oxygen saturation, pulse rate, and PPG waveforms. *Vitronics Corp. v. Conceptronic, Inc.*, 90 F.3d 1576 (Fed. Cir. 1996) (claim construction that would exclude a preferred embodiment is "rarely, if ever, correct"). Apple's construction also appears to be contrary to the claims. Claim 39, which depends from

MASIMO 2038
Apple v. Masimo
IPR2024-00241

Claim 27, recites that the "first blood parameter comprises a percent oxygen saturation." '223 Patent at Claim 39. Apple's construction fails to account for a percent oxygen saturation.

Apple's citations to the intrinsic evidence do not support its proposal. D.I. 169 ("JCCC"), Ex. A at 1-2. For example, Apple cites to a passage that explains, "in this application, reference is made to many blood parameters," and then discusses abbreviations for carboxyhemoglobin (HbCO), methemoglobin (HbMet), and total hemoglobin (Hbt). *Id.* at 1 (citing '223 Patent at 5:59-6:8). While these examples are concentrations of constituents of the blood, they do not limit "blood parameter" to "concentration of a constituent in blood." Rather, the passage provides inclusive, non-limiting examples of "blood parameters." *Johnson Worldwide Associates, Inc. v. Zebco Corp.,* 175 F.3d 985, 989-91 (Fed. Cir. 1999) (improper to limit claim term when specification is consistent with broader definition); *InterDigital Comms., LLC v. ITC,* 690 F.3d 1318, 1325 n.1 (Fed. Cir. 2012) (error to construe "code" as limited to "spreading code" when specification not so limited). Apple's other intrinsic evidence is equally unhelpful because that evidence identifies various parameters measured by pulse oximetry, regardless of whether they are concentrations of constituents. *See, e.g.*, '223 Patent at 2:51-3:9, 8:14-37, 18:1-18, 22:61-64; JCCC, Ex. A at 1-2. Those parameters include oxygen saturation and pulse rate.

None of Apple's citations support ignoring oxygen saturation and pulse rate—the two fundamental parameters of pulse oximetry. Indeed, the "pulse" in "pulse oximetry" refers to the pulsatile nature of the blood. Masimo Ex. 2 at 258 (defining pulse oximeter). Oxygen saturation and pulse rate determined from a PPG waveform are unquestionably blood parameters measured by the noninvasive monitor described and claimed in the '223 Patent.

MASIMO 2038
Apple v. Masimo
IPR2024-00241

2. Apple's Answering Position

The parties dispute whether "blood parameter" means the "concentration of a constituent in blood" as proposed by Apple or "any parameter of circulating blood" as Masimo now alleges. *Supra* at 5. The main dispute is whether a pulse rate or PPG waveform is a "blood parameter."

The intrinsic evidence makes clear that "blood parameter" (1) refers to a blood ***constituent*** and (2) does ***not*** include all "physiological parameters," such as pulse rate or PPG waveform. The claims suggest that the claim terms "blood parameter" and "physiological parameter" are different; some claims recite "blood parameter" whereas other claims recite "physiological parameter."

Claims Reciting "Blood Parameter"	***Claims Reciting "Physiological Parameter"***
[27]…a display capable of displaying a measured value of a ***first blood parameter*** of body tissue of a monitored patient or displaying a measured value of a ***second blood parameter*** of the body tissue…. Apple Ex. 1, Cl. 27; *see also id.*, Cls. 28-36, 39, 43-45.	[1]…a display capable of displaying a measured value of a ***first physiological parameter*** of body tissue of a monitored patent in a first display area or displaying a measured value of a ***second physiological parameter*** of the body tissue in a second displayed area…. Apple Ex. 1, Cl. 1; *see also id.*, Cls. 3-11, 13, 15-16, 18-26.

"[W]e must presume that the use of these different terms in the claims connotes different meanings." *CAE Screenplates Inc. v. Heinrich Fiedler GmbH & Co. KG*, 224 F.3d 1308, 1317 (Fed. Cir. 2000). The difference is that "physiological parameters" are parameters of any physiological system, while "blood parameters" are specific to blood. *See* Apple Ex. 33, ¶54. In short, not all "physiological parameters" are "blood parameters." *Id.*

Consistent with this distinction, claim 39 gives instructive examples of "blood parameters," reciting "percent oxygen saturation [SpO2]" and "percent carbon monoxide saturation [HbCO]" as blood parameters. Apple Ex. 1, Cl. 39. Accordingly, SpO_2, and HbCO are "blood parameters."

The specification mentions "blood parameter" only once, but it is highly instructive:

> Moreover, in this application, reference is made to many ***blood parameters***. … For example, as used herein, ***HbCO*** designates carboxyhemoglobin, ***HbMet*** designates

MASIMO 2038
Apple v. Masimo
IPR2024-00241

> methemoglobin, and ***Hbt*** designates total hemoglobin. Other shorthand designations such as COHb, MetHb, and tHb are also common in the art for these same ***constituents***. ***These constituents are generally reported herein in terms of a percentage, often referred to as saturation, relative concentration or fractional saturation. Total hemoglobin is generally reported as a concentration*** in g/dL. The use of the particular shorthand designators presented…does not restrict the term to any particular manner in which the designated ***constituent*** is reported.

Id. at 5:61-6:8. This passage (1) identifies HbCO, HbMet, and Hbt as "blood parameters"; (2) describes blood parameters as blood "constituents"; and (3) teaches that blood constituents are reported as a "concentration" or a "relative concentration."[2] Thus, the claims and specification identify four "blood parameters"—HbCO, HbMet, Hbt, and SpO_2—each of which is described as a blood "constituent" reported in terms of a "concentration" or a "relative concentration."

The specification further distinguishes these and other "blood constituents" from "physiological parameters" such as pulse rate, PPGs, and perfusion:

> [T]here is a need to provide patient monitors capable of displaying multiple ***physiological parameters, other than or in addition to SpO2, plethysmograph waveforms, or pulse rates***. For example, in accessing a patient's condition, caregivers often desire knowledge of other ***blood constituents, including for example, a percent value for arterial carbon monoxide saturation ("HbCO") or a percent value for methemogobin saturation ("HbMet")*** or the like. For example, in an embodiment, the display advantageously displays one or more of the following: pulse rate, plethysmograph waveform data, perfusion index, ***values of blood constituents in body tissue, including for example, HbCO, HbMet, total hemoglobin ("Hbt"), arterial oxygen saturation ("SpO_2"), fractional arterial oxygen saturation ("$SpaO_2$")***, or the like.

Apple Ex. 1, 2:51-65 (Summary); *see also id.*, Abstract; 8:21-28. Notably, the patent refers to pulse rate and PPG waveforms as "physiological parameters," but never as "blood parameters." *Id*.

[2] SpO_2 and HbCO—identified as blood parameters in claim 39—provide the relative concentration of oxygen and carbon monoxide, respectively, ***constituent*** in blood. *See, e.g.*, Apple Ex. 33, ¶60.

MASIMO 2038
Apple v. Masimo
IPR2024-00241

The intrinsic evidence thus makes clear that the disclosed "blood parameters" and "physiological parameters" have the relationship set forth in the Venn diagram below and that pulse rate and PPGs are ***not*** "blood parameters."

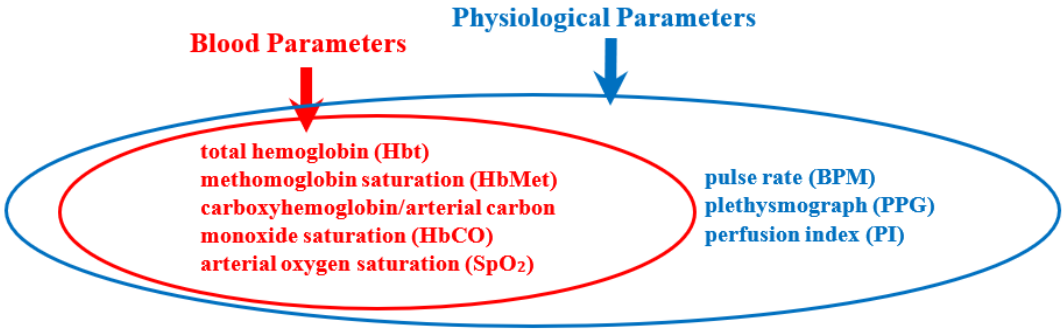

Masimo fails to show that "blood parameter" means "any parameter of circulating blood in the body" and includes pulse rate and PPG waveforms. *Supra* at 5-7. *First*, Masimo disregards the intrinsic evidence above. *Second*, the specification does not say pulse rate or PPGs are "blood parameters." Masimo relies on a description of "pulse oximetry" discussing "measuring parameters of circulating blood through spectroscopy" (Apple Ex. 1, 2:26-30), but the specification says that "spectroscopy is a common technique for ***measuring the <u>concentration</u>*** of organic and some inorganic ***<u>constituents</u>*** of a solution." *Id.*, 1:61-63. The combined import is that the "parameters of circulating blood" measured by spectroscopy are the ***concentration of constituents in blood***. Masimo's assertion that "[a]t least pulse rate and PPG determinations are not 'concentrations,' i.e., the amount of a parameter in a volume, and are not related to any 'constituent in blood'" (*supra* at 6) is Apple's point—pulse rate and PPGs are ***not*** "blood parameters." *See* Apple Ex. 33, ¶¶62-67.

Third, Masimo's allegation that "Apple's construction fails to account for a percent oxygen saturation" (*supra* at 7) is inaccurate. Masimo appears to mean that oxygen saturation is not a concentration, but, as the specification explains, percentage saturation is a "relative concentration."

Apple Ex. 1, 6:2-4. Thus, Apple's construction encompasses percent oxygen saturation, consistent with claim 39's confirmation that percent oxygen saturation is a blood parameter. *See* Apple Ex. 33, ¶48 n.4.

Finally, pulse rate and PPGs are not blood parameters. A POSA would have viewed a "blood parameter" as something that can be quantified to provide information about the state of the blood—not just anything relating to blood. Apple Ex. 33, ¶48. Pulse rate, on the other hand, is a measure of how many times a person's heart beats in a given time period; it does not provide information about the blood. *Id.*, ¶63; *see also* Apple Ex. 23 (Dorland's Illustrated Medical Dictionary (30th Ed. 2003)) at 1366 (definition of "parameter," utilizing the example that "blood pressure and ***pulse rate are parameters of cardiovascular function***"). Similarly, a PPG provides information about the heart, not the blood. Apple Ex. 33, ¶64. Thus, a POSA would not consider pulse rate or a PPG to be a blood parameter. *Id.*, ¶¶62-67.

3. <u>Masimo's Reply Position</u>

The parties agree that at least HbCO, HbMet, Hbt, and SpO_2 are "blood parameters." PPG and pulse rate also are blood parameters based on the '223 Patent specification and the ordinary meaning of the phrase. The specification discloses that pulse oximeters determine PPG and pulse rate—two fundamental parameters of pulse oximetry—by detecting changes in light absorbed by pulsatile arterial blood. '223 Patent at 2:16-35. Yet, Apple maintains that PPG and pulse rate are not blood parameters. Specifically, Apple argues that the claims and specification (1) differentiate "physiological parameters" from "blood parameters" such that PPG and pulse rate are not "blood parameters" and (2) limit "blood parameter" to "blood constituents." Both of Apple's arguments are incorrect.

MASIMO 2038
Apple v. Masimo
IPR2024-00241

PPG and Pulse Rate Are Both Blood Parameters and Physiological Parameters: Apple's argument about the difference between "physiological parameter" and "blood parameter" is irrelevant because PPG and pulse rate are ***both*** "physiological parameters" and "blood parameters," just like HbCO, HbMet, Hbt, and SpO_2. Apple block quotes, and highlights in blue, the specification's reference to patient monitors that can display "multiple physiological parameters, other than or in addition to SpO_2, plethysmograph [PPG] waveforms, or pulse rate." *Supra* at 9 (citing '223 Patent at 2:51-65). But the phrase "other than or in addition to" refers to a broader category of parameters beyond the three listed (SpO_2, PPG, pulse rate). The three listed parameters also begin with SpO_2, which the parties agree is a "blood parameter." Thus, nothing in the statement supports Apple's conclusion that PPG and pulse rate are not "blood parameters."

Apple also does not address that the specification uses "physiological parameters" to refer to a broader category of parameters not determined by absorption spectroscopy. Specifically, the specification explains that "the monitor 100 may advantageously be adapted to monitor or be included in a monitor capable of measuring ***physiological parameters other than those determined through absorption spectroscopy***, such as for example, blood pressure, ECG, EKG, respiratory rates, volumes, inputs for blood pressure sensors, acoustical sensors, and the like." '223 Patent at 19:43-49. ECG and EKG, for example, are typically measured with electrical signals. Masimo Ex. 45, ¶7. They are "physiological parameters" but not "blood parameters." *Id.*, ¶¶6-7. In contrast, the specification explains that pulse oximeters determine pulse rate and PPG through absorption spectroscopy. '223 Patent at 2:16-35.

Apple concedes that pulse rate and PPG are "parameters of the cardiovascular system." *Supra* at 9-10. According to Apple, pulse rate and PPG are "information about the heart" and ***not*** blood. *Id.* at 11. Apple goes so far as to argue that neither "provide[s] information about the

blood." *Id.* But Apple is wrong about what pulse rate and PPG measure. Apple relies on its expert (Warren) to define "pulse rate" as "a measure of how many times a person's heart beats in a given time period." *Id.* But that defines ***heart*** rate, not pulse rate. Masimo Ex. 45, ¶¶9-11.

Heart rate and pulse rate are related, but not the same. Each healthy heartbeat creates an arterial blood flow pulse that can be felt throughout the body. *Id.* But in people with health problems, such as ventricular fibrillation, the heart might beat without pushing blood through the cardiovascular system, leading to a lower pulse rate than heart rate. *Id.* One extreme example, a patient with a severed artery, demonstrates the difference between pulse rate and heart rate. The severed artery would prevent blood from reaching an extremity, such as a wrist or finger. The heart may continue to beat at a heart rate, but the pulse rate at that wrist or finger would be very weak or zero. The weak or zero pulse rate certainly provides information about the blood, namely, it is not pulsating properly. Masimo Ex. 45, ¶¶12-13.

Apple is also incorrect that PPG provides information only about the heart and not the blood. The PPG changes when the concentration of constituents in the blood changes. '223 Patent at 1:61-2:47. The disclosed technology relies on this principle to measure HbCO, HbMet, Hbt, SpO_2, and other parameters by detecting and processing PPGs for different wavelengths of light. *Id*. at 1:61-2:47. Thus, PPG provides information about the blood. Masimo Ex. 45, ¶14.

<u>Blood Parameter Is Not Limited to Constituents</u>: Apple presents no reason to limit the claimed "blood parameter" to constituents only. The specification expressly states that "in this application reference is made to ***many blood parameters***." '223 Patent at 5:61-62. Apple cites this disclosure and calls it "highly instructive" but disregards the "many" in "many blood parameters." *Supra* at 8. In contrast, Apple argues that the "claims and specification identify ***four*** 'blood parameters'" only. *Id*. at 9. But Apple took no position on the numerous other blood

MASIMO 2038
Apple v. Masimo
IPR2024-00241

parameters listed in the specification. *See, e.g.*, '223 Patent at 17:38-41, 8:28-34. Apple's expert (Warren) limits "blood parameter" to "hematological parameter" based on unidentified extrinsic evidence: "the literature." Apple Ex. 33, ¶48. However, the specification does not mention "hematological parameter" at all. Apple's unsupported extrinsic evidence provides no reason to rewrite the claims as Apple argues.

The parties agree that the specification distinguishes "blood constituents" from the broader category "physiological parameters." *Supra* at 8-9. But that says nothing limiting "blood parameters" to "blood constituents." Rather, blood constituents are part of the larger group of blood parameters, which are part of the larger group of physiological parameters. Masimo Ex. 45, ¶14. Thus, though other claims and the specification refer to the blood constituents HbCO, HbMet, Hbt, SpO_2 as "blood parameters," that is no reason to narrow blood parameters to those constituents.

4. <u>Apple's Sur-Reply Position</u>

Masimo admits that "blood parameters" are narrower than "physiological parameters" (*supra* at 11-12); Masimo Ex. 45, ¶¶6, 14), yet continues to stretch the former to capture the latter.

First, Masimo fails to rebut the intrinsic support for construing "blood parameters" as "the concentration of a constituent in blood." Masimo does not dispute that the specification mentions "blood parameter" only once and that this disclosure is highly instructive. As Apple previously stated, the claims and specification ***expressly*** identify four parameters as "blood parameters" (SpO_2, HbCo, HbMet, and Hbt)—each of which is a constituent measured as a concentration—and use "blood parameter" and "constituent" interchangeably. *Supra* at 8-11. Contrary to Masimo's suggestion, Apple never denied that the specification discloses other blood constituents that would qualify as "blood parameters." Further, Masimo's allegation that "blood parameters" is broader than "blood constituents" relies solely on an expert declaration and improperly elevates

MASIMO 2038
Apple v. Masimo
IPR2024-00241

extrinsic material over the intrinsic record. In any event, contrary extrinsic evidence exists. Apple Ex. 33, ¶48.

Second, Masimo again fails to establish that pulse rate and a PPG are "blood parameters." While the patent refers to pulse rate and PPGs as "physiological parameters," it never refers to them as "blood parameters" or "constituents." Apple Ex. 1, Abstract, 2:51-65, 5:61-6:8, 8:21-28. Indeed, Masimo admits they "are not related to any 'constituent in blood.'" *Supra* at 6; *see* Masimo Ex. 45, ¶14. Moreover, as Apple's answering brief explained, the specification disclosure at 2:51-65 supports Apple's construction as well as Apple's position that pulse rate and PPG are not "blood parameters." *Supra* at 9. That statement refers to "***physiological parameters*** other than or in addition to SpO_2, [PPG] waveforms, and pulse rate" (Apple Ex. 1, 2:51-65) and, tellingly, the patent expressly refers to ***just one*** of those as a "blood parameter"—SpO_2. Apple Ex. 1, Cl. 39.

Masimo's allegation that "'physiological parameters' [] refer[s] to a broader category of parameters not determined by absorption spectroscopy…" (*supra* at 12) undermines Masimo's position; it confirms "physiological parameters" are a broader category than "blood parameters."

Masimo's other attempts to show pulse rate and PPG are "blood parameters" lack intrinsic support. Relying on Dr. Madisetti, Masimo mischaracterizes Dr. Warren's discussion of pulse rate and conflates "heart beats" with "heart rate" (*supra* at 12-13) even though (1) both heart rate and pulse rate are measured in "beats per minute" and (2) the word "beat" is semantically broad enough to be used in multiple contexts. Apple Ex. 48, ¶¶38-43. Masimo's unlikely hypotheticals of ventricular fibrillation or a severed artery would not "lead[] to a lower pulse rate than heart rate" (*supra* at 13) but rather to an "indeterminate" result based on an irrelevant comparison in a physiological monitoring system. Apple Ex. 48, ¶¶44-50. Further, Masimo incorrectly alleges that a "weak or zero pulse rate certainly provides information about the blood, namely, it is not

pulsating properly." *Supra* at 13. But if such pulsations are so immeasurable that pulse rate is "very weak or zero," the practitioner learns ***nothing*** about the blood itself. Apple Ex. 48, ¶50. Finally, Masimo's allegation that "PPG changes when the concentration of constituents in the blood changes" (*supra* at 13) reflects another fundamental technical misunderstanding. While multiple PPGs can be used in aggregate to derive blood parameters, a single PPG does not provide enough information to determine the concentration of any given constituent or otherwise discern the state (*i.e.*, makeup or viability) of the blood in terms of its ability to perform its roles as a connective tissue. *See* Apple Ex. 48, ¶28.

B. "measured value" ('223 Patent: Claims 15, 21, 27-28, 36, 43) [Term M-2]

Masimo's Proposal	Apple's Proposal
Plain and ordinary meaning	actual numeric value of a measurement

1. Masimo's Opening Position

Each of Claims 15, 21, 27-28, 36, and 43 recites "displaying a measured value," such as "a display capable of displaying a measured value of a first physiological parameter of body tissue . . . in a first display area." '223 Patent Reexam. Cert. at Claim 15. Any reading of the specification shows that the phrase "measured value" means any representation of parameters of the circulating blood. Masimo Ex. 13, ¶¶44-47.

The specification shows that the "measured value" can include a "bar" that "'fills' to a level proportional to the measured value." '223 Patent at 10:27-30, FIG. 9 (below, left). The "measured value" can also be displayed as a trend line, as shown below (right). *Id.* at FIG. 11C.

MASIMO 2038
Apple v. Masimo
IPR2024-00241

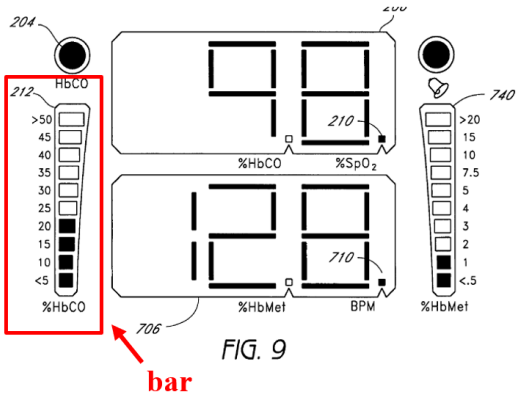

FIG. 9

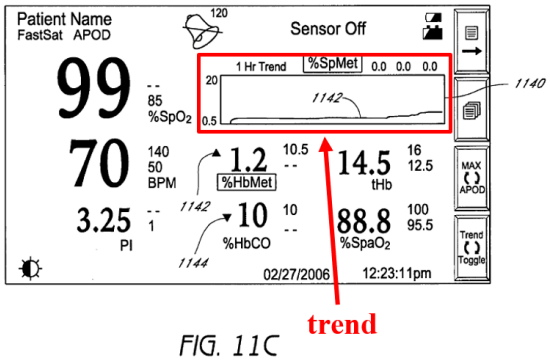

FIG. 11C

Apple argues that "measured value" should be limited to an "actual numeric value of a measurement." But the specification never suggests that the display of a "measured value" must be only a numerical value. To the contrary, as shown above, the specification repeatedly teaches that "measured values" may be displayed using representations other than a numerical value. Even Apple's citations are to figures and text that depict and describe a "measured value" in non-numerical formats, such as a bar or trend like those shown above. *See, e.g.*, JCCC, Ex. A at 3 (citing '223 Patent at 17:51-66 (describing trend), 15:15-17 (describing bar)).

2. <u>Apple's Answering Position</u>

The parties dispute whether a "measured value" is the actual, as-measured numeric value of a parameter or whether it also encompasses "any representation of parameters…"—a vague and unsupported construction that Masimo improperly asserts includes mere graphics (such as a bar or trend line) or a notification relating to an unmeasured, predetermined threshold. *Supra* at 16-17.

The claims require "displaying a measured value." Apple Ex. 1, Cls. 1, 7, 13, 15, 18, 21, 27, 28, 45. Both the claims and specification confirm that the "measured value" displayed is the actual measured value of a parameter—not merely a notification that a parameter is approaching or has passed a predetermined threshold or any other rough or indirect indication. The claims expressly differentiate between a "measured value" and "threshold value":

> ***[T]he display of one of the measured values*** of the first or second physiological parameter is replaced with the other of the ***measured values*** based on an occurrence of an event, the event being the ***measured value*** of one of the first or second physiological parameters approaching one or more ***threshold values*** …
>
> * * *
>
> [T]he display of the ***measured value*** of the first blood parameter is replaced by the ***measured value*** of the second blood parameter when the second blood parameter passes an ***alarm threshold***.

Id., Cls. 1, 27; *see also id.,* Cls. 7, 13, 28, 36, 45. The specification likewise distinguishes between "measured value" and "predetermined threshold values." *Id.*, 13:4-6 ("The signal IQ indicator 238 activates to inform a caregiver that a ***measured value*** of the quality of the incoming signal is below ***predetermined threshold values***"), 13:66-14:4 ("…as one or more of the ***measured values*** approaches or passes ***predetermined thresholds***"). And further underscoring the need for actual measured values, the specification teaches that "displays may flash … when ***actual*** measured values are unavailable" or "where confidence is decreasing that the measured values reflect actual physiological conditions." *Id.*, 14:33-38. The patent's use of different terms suggests that "measured value" and "threshold value" have different meanings.

The specification also confirms that a measured value must be numerical. *First*, the specification expressly refers to "measured values" as "numbers": "[W]hen the multi-mode display 206 displays ***measured values of SpO_2*** that are normal, ***the numbers*** may advantageously appear in green…" *Id.*, 10:18-23; *see also id.*, 15:60-64 ("[W]hen the multi-mode display 706 displays ***measured values of BPM*** that are normal, the ***numbers*** may advantageously appear in green…").

Second, the specification and figures ***always*** display the "measured values" numerically.[3]

[3] The right side of Fig. 4 shows the measured value of perfusion (*id.*, 4:15-18), which, as discussed below, is not the "PI" bar itself but rather the number 3 corresponding to the bar's fill level.

MASIMO 2038
Apple v. Masimo
IPR2024-00241

For example, the specification describes Figure 4 as "showing ***measured values of SpO₂*** [and] ***BPM***"—and depicts them numerically. *Id.*, Fig. 4; 4:15-18; 14:39-50 ("As shown in FIG. 4, the multi-mode display 206 is displaying a ***percentage value of SpO2***, and the pulse rate display 216 is displaying a ***pulse rate in beats per minute***."). Indeed, the specification distinguishes numerical "measured values" from mere graphs.

Fig. 4: "Measured Values" of SpO_2 & BPM

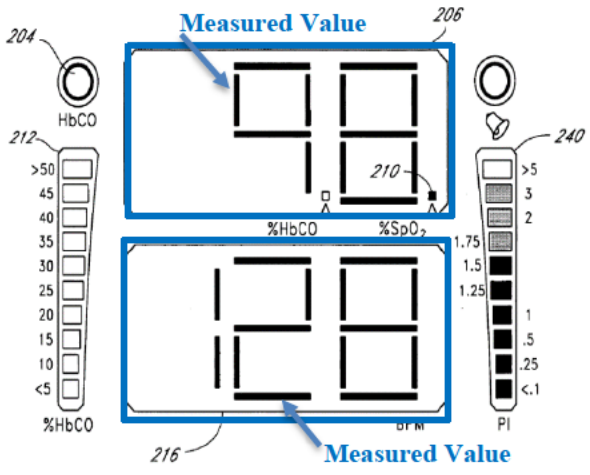

The specification calls SpO_2 1102, pulse rate 1104, HbMet 1110, perfusion quality 1112, and Hbt 1114 "measured values"—which Fig. 11A shows as numbers. *Id.*, 17:33-38. It does not so describe a plethysmograph 1106, which is shown graphically.

Fig. 11A: Measured Values

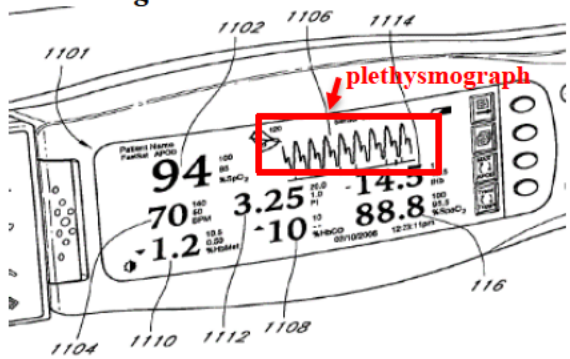

The specification also calls SpO_2 1162 and pulse rate 1164 "measured values," which Fig. 11G shows as numbers, but not plethysmograph 1166, HbCO bar 1168, and HbMet bar 1170, which are likewise shown graphically. *Id.*, 18:5-8; 18:28-29 (referring to $SpaO_2$ graph 1172"). All other pertinent discussion and figures in the specification depict "measured values" numerically. *Id.*, 4:19-38, 14:60-15:25, 16:45-17:2, 17:33-48, Figs. 5-6, 9-10, 11A-H.

Fig. 11G: Measured Values of SpO_2 & BPM

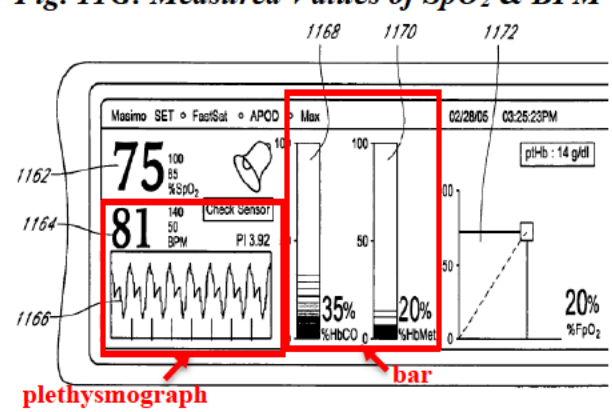

Third, the claims and specification compare a measured value with a predetermined threshold. *Id*., Cls. 1, 7, 13, 27, 28, 36, 45, 13:4-6, 13:66-14:4. Such a comparison would only make sense if the measured value were a number that can be compared to a threshold.

Finally, in the context of pulse oximeters during the pertinent time, a "value" was a number. *E.g.*, Apple Ex. 33, ¶71; Apple Ex. 24 (defining "value" as "6. *Mathematics* An assigned or calculated ***numerical quantity***."); Apple Ex. 25 (defining "value" as "4 a : a ***numerical quantity*** that is assigned or is ***determined by*** calculation or ***measurement***"). Masimo's cited textbook confirms that numerical definition—*e.g.*, "A normal ***value*** for oxygen delivery is ***115 to 165*** mL/(min m^2)." *See, e.g.*, Masimo Ex. 2 at APL_MAS_ITC_00015645; *see also id.* at 15664-65, 15693, 15694, 15708.

Masimo's overbroad construction of "measured value" as "any representation of parameters of the circulating blood" is fatally flawed. *Supra* at 16. *First*, it is unclear what the vague phrase "any representation" purports to mean. And "parameters of the circulating blood" compounds that ambiguity—that phrase is synonymous with Masimo's construction of "blood parameter," a claim term that is different from "physiological parameter." Under Masimo's proposal, claim 1's requirement of "a measured value of a physiological parameter" would mean "any representation of parameters of the circulating blood of a physiological parameter." Masimo's proposal creates confusion rather than resolving it.

Second, Masimo's construction lacks support and is contrary to the claims, specification, file history, and dictionaries—which do not describe a "measured value" as "any representation." Masimo's allegation that "the 'measured value' can include a 'bar that 'fills to a level proportional to the measured value'" cites only 10:27-30 and Fig. 9 (*supra* at 16), but both citations contradict Masimo's argument. The language quoted by Masimo, as well as other specification disclosures,

MASIMO 2038
Apple v. Masimo
IPR2024-00241

confirm that the "bar" is merely "***proportional to*** the measured value"—it is not the "measured value" itself. *See* Apple Ex. 1, 10:27-30, 13:15-19, 16:18-20, Figs. 4-6, 8-10. In any event, Fig. 9 expressly shows numbers; the "measured value" of %HbCO is 20%. *Supra* at 17; Apple Ex. 1, 16:48-51 ("FIG. 9 also shows … the HbCO bar **212** hovers at … 20%."). Even in the context of a bar, the specification always depicts a "measured value" as ***a number***. *Id.*, 4:15-38, 14:39-15:25, 16:45-17:2, Figs. 4-6, 9-10.

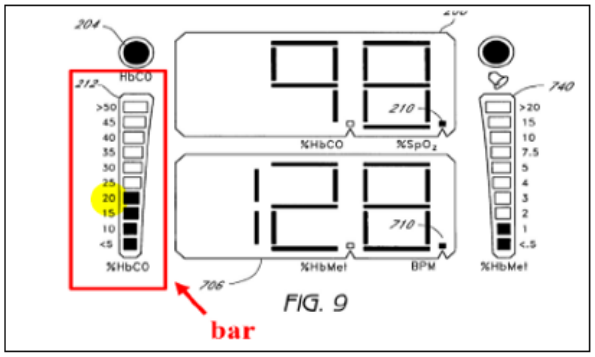

FIG. 9

Masimo's allegation that "[t]he 'measured value' can also be displayed as a trend line" cites only Fig. 11C (*supra* at 17), but neither that figure nor the specification support the argument. Notably, the specification describes 1140 as a "trend graph" and 1142 (within that graph) as a "trend line"—neither is called a "measured value." Apple Ex. 1, 17:49-50. In any event, Fig. 11C shows many numbers, undermining Masimo's overbroad construction. Confirming the difference between "trend" depictions and a "measured value," the specification discusses trend graph 1140 and trend line 1142 separately from the measured values shown in Figs. 11A & D. *Compare id.*, 17:16-41 *with id.*, 17:42-67; *compare id.*, 18:1-22 *with id.*, 18:23-25 ("***In addition to the foregoing***, the display may ***also*** include graphical data showing one or more color-coded or other identifying indicia for ***traces of trend data***."). Moreover, the specification repeatedly differentiates between trend data on the one hand and measured or parameter values on the other. *Id.*, 3:10-43, 5:26-30, 6:39-42, 8:30-34, 17:27-32 ("However, an artisan will recognize from the

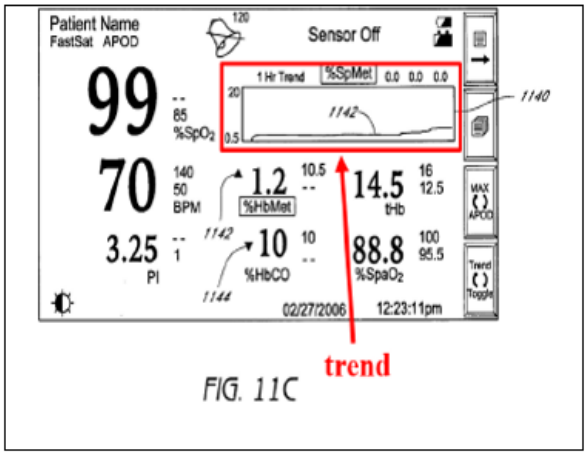

FIG. 11C

disclosure herein many commercially available display components capable of displaying ***multiple parameter data <u>along with</u> the ability to display graphical data*** such as plethysmographs, ***trend traces***, and the like.”). In short, a trend line is not a “measured value.”

Finally, Masimo’s attempt to replace “measured value” with “any representation” fails to accord meaning to the words “measured” and “value”—either alone or in combination—and improperly reads this term out of the claims.

3. <u>Masimo’s Reply Position</u>

Masimo previously explained that the specification discloses multiple ways to display a measured value, including for example, a numerical value, bar, or trend. Yet Apple insists that the phrase “measured value” means “an actual numeric value of a measurement.”

Apple argues that “the specification and figures ***always*** display the ‘measured values’ numerically.” *Supra* at 18. But Apple is wrong. The specification describes displaying measured values as a trace or trend, among other representations. For example, the specification explains that displaying trace data is displaying a measured value. Specifically, it discloses “display[ing] historical ***trace data*** on an appropriate display indicating the ***measured values*** of perfusion over time.” ’223 Patent at 13:58-59. The specification also teaches that a “bar ‘fills’ to a level proportional to a measured value.” *Id.* at 10:27-48. That bar displays a measured value. Apple criticizes this disclosure as describing a bar “merely proportional to the measured value” and not the value itself. *Supra* at 21. Apple treats “proportional to a measured value” as if it means something completely different than “measured value.” But the bar shows one way to display a measured value because its proportional “fill” conveys the measured value to the viewer. Apple also presents the backup argument that the bar also has numbers listed on the side. But those “increment” numbers on the side represent the scale of the display. ’223 Patent at 10:32-48. The proportion of the “fill” on the bar is what displays the measured value.

MASIMO 2038
Apple v. Masimo
IPR2024-00241

Apple also argues that because the claims recite comparing a measured value with a predetermined threshold, "measured value" must be a numeric value. *Supra* at 18-19. Apple speculates this "would only make sense if the measured value were a number that can be compared to a threshold." *Id.* at 20. But Apple's argument focuses on how the device compares calculated parameters to a threshold, which may not be the same as how the device displays that parameter. Even when the system displays the measured value as a trend line or bar graph, it can still compare the underlying calculated parameter to a threshold. Masimo Ex. 45, ¶16.

Apple relies on its expert and various mathematics definitions of "value" to argue that "in the context of pulse oximeters during the pertinent time, a 'value' was a number." *Supra* at 20. But that is unhelpful to understanding how the '223 Patent claims "displaying a measured value." Isolating "value" says nothing about how it could be displayed.

Apple argues the specification discusses graphs and lines "separately from the measured values." *Id.* at 21. For example, Apple attempts to distinguish the graphical display of methemoglobin in Figure 11C from "measured values" because neither the trend graph 1130 nor the trend line 1143 "is called a 'measured value.'" *Id.* But that elevates the figure ***labels*** over the specification's description. As explained above, the specification describes displays of such trace data as "indicating the measured values" of the parameter over time. Apple similarly argues that the specification "differentiates between trend data on one hand and measured or parameter values on the other." *Id.* (citing specification). But rather than distinguishing "measured values" from trend data or graphs, the specification describes trend data or graphs as one way to display measured values.

4. <u>Apple's Sur-Reply Position</u>

Masimo fails to address, let alone dispute, the following points in Apple's answering brief that support Apple's construction: (1) the patent differentiates between "measured value" and

MASIMO 2038
Apple v. Masimo
IPR2024-00241

"threshold value," (2) the patent refers to measured values as "numbers," and (3) "value" means "a numerical quantity." *Supra* at 17-22. Masimo also fails to explain how its construction is not irreconcilably confusing when plugged into Claim 1 ("measured value of a physiological parameter") or redundant when plugged into Claim 27 ("measured value of a blood parameter").

In response to Apple's explanation that the patent always displays measured values numerically (*supra* at 18-19), Masimo rehashes its allegations. Masimo's repeat allegations again fail to overcome the patent's express teaching that the "bar" fill level is merely "***proportional to*** the measured value"—not that the bar ***is*** the "measured value." *Supra* at 21 (quoting Apple Ex. 1, 10:27-30). Masimo now also posits, without citation, that "the specification describes trend data or graphs as one way to display measured values" and asserts for the first time in its reply that "trend" and "trace ***data***" are measured values. *Supra* at 22-23. Apple already explained that trend graphs are not "measured values." *Id.* at 21-22; Apple Ex. 1, 17:49-50. Nor are trend/trace data. Like the aforementioned "bar," trace data merely offer graphics proportional to measured values. Apple Ex. 48, ¶63.

Moreover, in response to Apple's explanation that the claimed requirement of comparing a measured value to a threshold only makes sense if the measured value is a number, Masimo asserts that "how the device compares calculated parameters to a threshold…may not be the same as how the device displays that parameter." *Supra* at 23. It is unclear how this assertion purports to help Masimo; if anything, the reference to calculations confirms the numerical nature of "value." Masimo also alleges that, even if a value is a number, "[i]solating 'value' says nothing about how it could be displayed." *Id.* But if a value is a number, then "displaying a [] value" (as required by all claims) ***requires*** displaying a ***number***.

MASIMO 2038
Apple v. Masimo
IPR2024-00241

Finally, Apple has not elevated figure labels over the specification's descriptions. The figures and specification confirm Apple's construction and no discrepancy exists between them.

C. "generally capable of displaying" ('223 Patent: Claim 21) [Term M-3]

Masimo's Proposal	Apple's Proposal
Not indefinite; plain and ordinary meeting; preamble is not limiting	Indefinite (not briefed by apple)

1. Masimo's Opening Position

The preamble of Claim 21 recites a "display location being ***generally capable*** of displaying a single physiological parameter measurement." '223 Patent at 21:37-39. Masimo submits the phrase need not be construed. Apple argues the phrase is indefinite.

The phrase "generally capable of displaying" appears in the preamble only. The jury will not need to refer to this phrase to understand the claim. Indeed, without the preamble, Claim 21 describes a complete invention "such that deletion of the preamble phrase does not affect the structure or steps of the claimed invention." *Am. Med. Sys. v. Biolitec, Inc.,* 618 F.3d 1354, 1358-59 (Fed. Cir. 2010). Thus, the preamble is not limiting. *Id.*; *see also TomTom, Inc. v. Adolph*, 790 F.3d 1315, 1323-24 (Fed. Cir. 2015); Masimo Ex. 13, ¶49. And because the preamble is not limiting, this phrase needs no construction and cannot be indefinite. *See, e.g.*, *Mars, Inc. v. TruRx LLC*, No. 6:13-cv-526, 2015 WL 11233455, *8 (E.D. Tex. Feb. 3, 2015) (finding no construction needed and rejecting indefiniteness argument because disputed phrase was in non-limiting preamble); *Endo Pharms. Inc. v. Watson Labs., Inc.*, No. 2:13-cv-192, 2014 WL 2859349, at *8 (E.D. Tex. June 23, 2014) (same), *Unwired Planet LLC v. Google Inc.*, 111 F. Supp. 3d 1120, 1124-25 (D. Nev. 2015) ("[T]he Court cannot conclude [claims] are invalid for indefiniteness due to alleged ambiguity in preambles that do not substantively limit them.").

MASIMO 2038
Apple v. Masimo
IPR2024-00241

Even if the preamble were limiting (it is not), Claim 21 would not be indefinite. Apple's indefiniteness position is apparently based on the term "generally." "Generally" in the preamble refers to a display that usually, but not always, displays ***a single*** parameter. Masimo Ex. 3 at 512 ("generally" means "usually" or "ordinarily"); *see also* Masimo Ex. 4 at 701 ("generally" means "in most cases; usually"). Sometimes, the display will be of two parameters. *See, e.g.*, '223 Patent at Fig 9. The specification explains the possibility of no parameter being displayed, e.g., when the sensor may be improperly attached to the user. *Id.* at FIG. 11B ("Sensor Off" indicator), 15:64-67 (explaining display may flash when "searching for saturation" or "signal quality is below a predetermined threshold"),12:12 ("probe off detection"), 13:29-31 ("improper attachment of the sensor"). Thus, a person of ordinary skill would understand that "generally capable of displaying" refers to a display that usually displays a single physiological parameter, but may not always. This is consistent with dictionaries, which define "generally" as "usually" or "ordinarily." Masimo Ex. 3 at 512; *see also* Masimo Ex. 4 at 701 ("generally" means "in most cases; usually").

Thus, a person of ordinary skill would have "reasonable certainty" regarding the scope of the phrase. Masimo Ex. 13, ¶¶50-53; *see also Nautilus, Inc. v. Biosig Instruments, Inc.*, 572 U.S. 898, 910 (2014). Unsurprisingly, courts have declined finding claims that use "generally" are indefinite. *Princeton Digital Image Corp. v. Amazon.com, Inc.*, No. 13-237-LPS, 2019 WL 351258, at *8 (D. Del. Jan. 29, 2019) ("generally" not indefinite because it accounts "for the possible variation between different models" or variations between expected and true occurrences); *Diebold Nixdorf, Inc. v. Hyosung Tns, Inc.*, No. 19-1695-LPS, 2021 WL 678672, at *4-5 (D. Del. Feb. 22, 2021) (declining to find "generally" indefinite); *Core Optical Techs., LLC v. Infinera Corp.*, No. SACV 17-00548 AG (JPRx), 2018 WL 11344751, at *13-15 (C.D. Cal. May

MASIMO 2038
Apple v. Masimo
IPR2024-00241

9, 2018) (declining to find "generally" indefinite because the "exact inverse may be unobtainable" in the "real world").

D. "mobile measurement" ('507 Patent: Claim 13) [Term M-4]

Masimo's Proposal	Apple's Proposal
Preamble is not limiting; Plain and ordinary meaning	Preamble is limiting; measurement during motion

1. Masimo's Opening Position

The phrase "mobile measurement" appears in the preamble only. The preamble recites: "A computer-implemented method of informing a user of mobile measurement of oxygen saturation ('SpO2')." The preamble does not affect the structure or steps of Claim 13 and the words of the preamble are not referenced anywhere else in the claim. Thus, the preamble is not limiting. *See Am. Med. Sys.*, 618 F.3d at 1358-59; *see also* Masimo Ex. 13, ¶54. Accordingly, there is no need for the Court to construe this preamble phrase. *L'Oreal S.A. v. Johnson & Johnson Consumer Cos., Inc.*, No. 12-98-GMS, 2013 WL 3788803, at *1 (D. Del. Jul. 19, 2013) (preamble term "is not a claim limitation and does not require construction.").

Even if the preamble were limiting (it is not), the Court need not construe this phrase because its plain and ordinary meaning is apparent from the words themselves. Masimo Ex. 13, ¶¶55-58. The plain and ordinary meaning of "mobile measurement" is a measurement using a mobile device. Indeed, the Oxford English Dictionary defines "mobile" as "1 able to move or be moved freely or easily" or "2 relating to mobile phones, handheld computers, and similar technology." Masimo Ex. 5 at 1136.

The specification is consistent with this plain and ordinary meaning. For example, the title of the '507 Patent is "Physiological monitor with mobile computing device connectivity." '507 Patent at Title; *see id.* at Abstract ("a physiological sensor and a mobile computing device

MASIMO 2038
Apple v. Masimo
IPR2024-00241

can be connected via a cable or cables"). The specification emphasizes that using an SpO_2 measurement device with a mobile computing device allows for the system to "***be more portable*** than existing monitoring systems, thereby facilitating enhanced patient care for more patients." *Id.* at 2:43-46. The specification consistently describes the measurement system as "mobile." *See, e.g.*, *id.* at 3:30-35 ("mobile physiological monitoring system" and "mobile patient monitoring device"), 3:39-40 ("mobile physiological sensors assemblies"), 3:45-46 ("mobile physiological data monitoring process"). Thus, "mobile" describes the type of device and simply refers to a device that is portable. Masimo Ex. 13, ¶57.

Apple's proposed construction ("measurement during motion") was apparently based on a desire to argue noninfringement because the accused products cannot measure while the measurement site is moving. The claims do not mention user motion at all and are not limited to measurements made only when a user is moving. Apple relies on a few portions of the specification that discuss reducing measurement errors during motion. '507 Patent at 6:1-22, 10:55-11:32. But these portions address measurement errors that can be caused by user motion and are unrelated to a "mobile measurement." Indeed, the specification never uses the term "mobile measurement" to describe measurements made when the user is moving. Instead, the specification uses the phrase "measure . . . during motion." *See, e.g.*, *id.* at 6:12-17. Further, these portions discuss a specific embodiment where the processing module uses specific types of processing technology. *Id.* at 6:1-22 (in some embodiments, processing module uses parallel signal processing engines to reduce errors caused by motion), 10:55-11:32 (in some embodiments, processing module uses adaptive filter technology to reduce errors caused by motion). "Mobile measurement" is not referring to that processing technology, but is merely referring to the type of device which shows the measurement. *See* Masimo Ex. 13, ¶55, 57.

MASIMO 2038
Apple v. Masimo
IPR2024-00241

2. Apple's Answering Position

The parties dispute (1) whether the preamble of claim 13 is limiting and (2) whether "mobile measurement" means measurement "during motion" (as Apple proposes) or "measurement using a mobile device" (as Masimo now proposes).

The Preamble Is Limiting: A preamble may be limiting where it (1) "recites essential structure or steps," (2) "recit[es] additional structure or steps underscored as important by the specification," *Rotatable Techs. LLC v. Motorola Mobility LLC*, 567 F. App'x 941, 943 (Fed. Cir. 2014), and/or (3) provides "antecedent basis" for the claims, *Bio-Rad Lab'ys, Inc. v. 10X Genomics Inc.*, 967 F.3d 1353, 1369 (Fed. Cir. 2020). The Federal Circuit has found preambles limiting where "[t]he written description emphasizes [] a key benefit of the invention" that is recited in the preamble. *Storage Tech. Corp. v. Cisco Sys., Inc.*, 329 F.3d 823, 834 (Fed. Cir. 2003).

Here, the preamble is limiting for two reasons. *First*, it recites an essential aspect of the invention to which the claim body refers, "mobile measurement of oxygen saturation ('SpO_2')":

> 13. A computer-implemented method of ***informing a user of mobile measurement of oxygen saturation ("SpO_2")***, the computer-implemented method comprising:
> outputting, from an optical sensor of an SpO_2 measurement system …
> via a processing board of the SpO_2 measurement system …
> processing said one or more signals to generate ***the SpO_2 measurement values***; and
> outputting ***the SpO_2 measurement values*** to the mobile computing device; and
> via an application configured to execute commands on the mobile computing device:…
> displaying…a representation of a physiological parameter of a plurality of physiological parameters comprising at least ***the SpO_2 measurement values*** …

Apple Ex. 8, Cl. 13. Because "***the*** SpO_2 measurement values" recited in the claim body refer back to the "mobile measurement of oxygen saturation ('SpO_2')" recited in the preamble (Apple Ex. 33, ¶¶98-99), the claims themselves make clear that the preamble recites an essential aspect of the invention.

MASIMO 2038
Apple v. Masimo
IPR2024-00241

Second, the written description emphasizes that a key benefit of the invention is the mobile measurement of oxygen saturation; namely, measurement "***during patient motion***":

> During routine ***patient motions (shivering, waving, tapping, etc.)***, the resulting noise can be quite substantial and can easily overwhelm a conventional ratio based oximetry system. ***This can provide accurate blood oxygenation measurements even <u>during patient motion</u>***…

Apple Ex. 8, 10:65-11:3. Consistent with that key benefit, the Summary of the Invention emphasizes the ability to gather data in "sports or extreme sports, military training and combat, aviation … high-altitude activities, monitoring of professionals in dangerous conditions … field hospitals, and mobile medical clinics, to name a few." *Id.*, 2:52-57. The patent repeatedly emphasizes:

- An acoustic respiratory monitor 540, as shown in FIG. 5C, can also be configured for ***<u>mobile</u> physiological parameter <u>measurement</u>***. . . . ***Continuous monitoring*** of respiration rate can be important for post-surgical patients . . . (*id.*, 14:64-15:3);
- "sensor data can be corrupted by noise due to ***patient movement***" (*id.*, 4:65-66);
- "to allow accurate monitoring of arterial oxygen saturation and pulse rate even ***during the most challenging conditions*** ..." (*id.*, 6:10-12);
- "to measure SpO_2 and pulse rate accurately, even ***during motion*** …" (*id.*, 6:17-18);
- "such data is often contaminated ***due to motion***. Identification and removal of these ***motion artifacts*** is often a prerequisite to any signal processing used to obtain blood oxygen saturation …" (*id.*, 9:51-54);
- "the signal processing module 210 can use adaptive filter technology to separate an arterial signal, detected by a pulse oximeter sensor, from the non-arterial noise (e.g., venous blood movement ***during motion***)…" (*id.*, 10:62-65).

The claim thus requires a "mobile measurement." *See Storage Tech.*, 329 F.3d at 834-35 (finding preamble term "forwarding device" limiting because "[t]he written description emphasizes that a key benefit of the invention is that the use of the next operation information within a forwarding device reduces the processing otherwise performed by the forwarding device.").

MASIMO 2038
Apple v. Masimo
IPR2024-00241

"Mobile Measurement" Means "Measurement During Motion": The adjective "mobile" modifies the noun "measurement." Apple Ex. 33, ¶109. Masimo's own dictionary defines "mobile" as "able to move or be moved freely or easily." Masimo Ex. 5 at 1136. Logically and grammatically, "mobile measurement" means the measurement itself is mobile; it occurs during motion.

The fuller claim phrase "mobile ***measurement of oxygen saturation***" and surrounding claim language confirm that—contrary to Masimo's proposal—the mobile computing device described by the patent does not ***measure*** the oxygen saturation but merely ***displays*** the results received from other elements. *See* Apple Ex. 8, Cl. 13 ("outputting the SpO2 measurement values ***to*** the mobile computing device" and "on the mobile computing device… displaying a representation of … the SpO2 measurement values"). The claims and specification do not describe mobile computing devices taking measurements; rather, the patent teaches the "drawback of implementing physiological measurement technology on mobile computing devices." *Id.*, 6:23-27.

3. Masimo's Reply Position

The Preamble Is Not Limiting: As Masimo previously explained, the phrase "mobile measurement" appears in the preamble of the claimed "method of informing a user of mobile measurement of oxygen saturation (SpO_2)." Apple argues that the preamble is limiting because "SpO_2 measurement values" in the body of the claim refers to "mobile measurement of oxygen saturation (SpO_2)" in the preamble. *Supra* at 29-31. But the term "***values***" in "SpO_2 measurement values" refers to measurement values generated by the processing board. Claim 13 recites that "a processing board" processes signals to generate the "SpO_2 measurement values," whereas the preamble sets forth a "method of informing a user of a mobile measurement."

Apple also argues that the written description emphasizes a "key benefit" of measuring during patient motion. *Id.* However, the "mobile measurement" in Claim 13 does not refer to that

MASIMO 2038
Apple v. Masimo
IPR2024-00241

processing technology. It recites a "method of informing a user" on "a mobile computing device including a display." And the specification touts the benefit of the claimed "SpO_2 measurement system" as a whole, with its "optical sensor," "processing board," and "mobile computing device," as being more portable than existing monitoring systems. '507 Patent at 2:43-57. The specification describes the entire measurement system as "mobile." *See, e.g.*, *id.* at 3:30-35 ("mobile physiological monitoring system" and "mobile patient monitoring device"), 3:39-40 ("mobile physiological sensors assemblies"), 3:45-46 ("mobile physiological data monitoring process"). "Mobile" refers to the portable nature of the measuring system. That is the "key benefit" recited in the preamble—not "measuring through motion." *Storage Tech.* undercuts Apple's arguments and thus the preamble is not limiting.

<u>"Mobile Measurement" Refers to Portability of the Measurement System</u>: But even if the preamble were limiting, Apple's construction is incorrect. Apple fails to show that "mobile" in the context of Claim 13 should mean only "during motion." Apple starts with a dictionary. *Supra* at 31. But that dictionary supports Masimo just as much as Apple. It defines "mobile" as "able to move or be moved freely or easily." The dictionary does not resolve what is moving. A POSA would know that "measure through motion" refers to movement at the measurement site whereas "mobile" refers to movement of the entire system. Masimo Ex. 45, ¶¶17-20. The claim language and specification support this understanding.

The entire system recited in Claim 13 is "able to move or be moved freely or easily." The specification supports that explanation by disclosing "the physiological ***monitoring system can be more portable*** than existing monitoring ***systems***, thereby facilitating enhanced patient care for more patients." '507 Patent at 2:43-46. It explains the benefits of portability including that "such a ***system*** can be sent home with a patient" and "the portable physiological monitoring equipment.

MASIMO 2038
Apple v. Masimo
IPR2024-00241

. . can facilitate the gathering of physiological measurement data in a variety of other contexts, such as . . . field hospitals, ***mobile*** medical clinics, to name a few." *Id.* at 2:47-57.

Apple argues that substituting "occurring during motion" for "mobile" makes sense "grammatically and logically." But "measuring during motion" is a completely different concept than using a mobile device. For example, one knows that a mobile phone is a device that can be moved from one location to another. But "occurring during motion" refers to taking a measurement while the measurement site is moving. Masimo Ex. 45, ¶¶17-20.

Finally, Apple argues that the "mobile computing device" recited in Claim 13 "does not ***measure*** the oxygen saturation but merely ***displays*** the results received from other elements." *Supra* at 31. That fact does not help Apple. As explained above, the entire system is mobile, including the display of the measurement on the "mobile computing device."

4. <u>Apple's Sur-Reply Position</u>

Masimo's argument ignores the bedrock concept of antecedent basis and ***supports*** Apple's position that the preamble is limiting. Masimo alleges that "SpO_2 measurement values" refer to measurement values generated by the processing board and that Claim 13 recites "'a processing board' processes signals to generate ***the*** 'SpO_2 measurement values'…." *Supra* at 31. But that makes Apple's point—the claim term "***the*** SpO_2 measurement values" ***must*** have antecedent basis, and no earlier reference to "SpO_2 measurement values" exists in the body of Claim 13. The only plausible antecedent basis is "mobile measurement of oxygen saturation ('SpO_2')" in the claim preamble. *Supra* at 29-30 (citing Apple Ex. 33, ¶¶98-99).

Further, Masimo concedes that "mobile" is the key benefit recited in the preamble, but alleges "mobile measurement" refers not to measuring during motion but to the "mobile computing device including a display." *Supra* at 32. Masimo fails to rebut Apple's explanations that "mobile" modifies "measurement"—the measurement itself is mobile—and the patent teaches away from

MASIMO 2038
Apple v. Masimo
IPR2024-00241

the "***drawback*** of implementing a physiological measurement technology on mobile computing devices." *Supra* at 30-31. When the patentee wanted to claim a portable measuring system, it did so explicitly by using "mobile" to modify the term "system" in unasserted Claims 1-12, directed to "[a] mobile pulse oximetry system." *See* Apple Ex. 8, Cls. 1-12; Apple Ex. 48, ¶67.

E. "one or more signals" ('507 Patent: Claim 13) [Term M-5]

Masimo's Proposal	Apple's Proposal
Plain and ordinary meaning	raw detected signal(s)

1. Masimo's Opening Position

The Court need not construe the phrase "one or more signals" because it is understandable on its face, without elaboration. A jury will understand the phrase because it is straightforward. Masimo Ex. 13, ¶¶59-60. The phrase "one or more" is a well understood modifier and the term "signals" is well understood. *Id.*

Apple concedes the well-understood nature of the word "signals" because it includes the word in its construction. Yet Apple has inserted the words "raw detected" as adjectives to the word signals. But the specification discusses the signals sent from the sensor to the processing board without specifying the signals are "raw detected" signals. For example, the specification explains that "the sensor 110 provides ***data in the form of an output signal*** indicative of an amount of attenuation of predetermined wavelengths (ranges of wavelengths) of light by body tissues, such as, for example, a digit, portions of the nose or ear, a foot, or the like." '507 Patent at 4:46-51; *see also id* at 9:23-25 (signals are "***intensity signals*** responsive to an amount of attenuation of light in pulsing patient blood"); *id.* at 4:67–5:1 ("the sensor data is transmitted from sensor 110 along the first cable 120 to the processing module 130"). The specification never suggests that the signal must be "raw." Masimo Ex. 13, ¶¶61-63; *see also Johnson Worldwide*, 175 F.3d at 989-91 (improper to limit claim term when specification is consistent with broader definition);

MASIMO 2038
Apple v. Masimo
IPR2024-00241

InterDigital, 690 F.3d at 1325 n.1 (error to limit "code" to "spreading code" when specification was not so limited).

Apple relies on a handful of examples where the specification describes some embodiments of the signal as "raw." *See, e.g.*, '507 Patent at 11:8-11 ("In ***some embodiments***," device can process "raw sensor data."); *id.* at 17:60-62 (signal "***can*** be raw sensor data"). But such examples do not justify limiting the claims to a "raw" signal as Apple proposes. *Thorner v. Sony Comp. Entm't America LLC*, 669 F.3d 1362, 1365 (Fed. Cir. 2012).

Apple also relies on portions of the file history for a parent patent, U.S. Patent No. 9,877,650. But those portions support Masimo's position. There, Masimo specifically pursued claims that recited "raw data." *See, e.g.*, Apple Ex. 10 at 79-84 (Mar. 15, 2017 Response to Office Action at 7-12). Thus, Masimo used different language, "raw data," when referring to raw data. *Phillips v. AWH Corp.*, 415 F.3d 1303, 1314 (Fed. Cir. 2005). The '650 Patent file history does not support limiting "one or more signals" to the different, more specific, language recited in the claims of the parent '650 Patent.

Lastly, Apple's insertion of the adjective "detected" is unhelpful because it is inherent in any signal output by a sensor. Thus, "detected" would be understood by the word "signal" and in the context of the rest of the claim.

2. <u>Apple's Answering Position</u>

The asserted claims require the optical sensor of the SpO_2 measurement system to output "one or more signals responsive to light from a light source attenuated by tissue of the user…" *Id*. The parties dispute whether the "one or more signals" output from the optical sensor are the raw detected signals as Apple submits or other unspecified signals as Masimo posits.

Masimo now admits that the claimed "one or more signals" in the context of the '507 patent are "detected signals," and thus all parties agree that the optical sensor must output the "detected

signals." *Supra* at 35 ("Thus, 'detected' would be understood by the word 'signal' and in the context of the rest of the claim.'"). Masimo's recognition, however, does not go far enough because the intrinsic evidence confirms that the optical sensor outputs "***raw*** detected signals." First, the claims make clear that the optical sensor detects signals, the optical sensor outputs those detected signals, and those detected signals are then received by the processing board:

> ***outputting, from an optical sensor*** of an SpO_2 measurement system, ***one or more signals*** ***responsive to light from a light source attenuated by tissue of the user*** at a measurement site, ***said one or more signals*** responsive to an oxygen saturation of said tissue; and
>
> via a ***processing board*** of the SpO_2 measurement system, the ***processing board*** in data communication with the optical sensor…
>
> > ***receiving said one or more signals from the optical sensor***;
> >
> > ***processing said one or more signals to generate the SpO_2 measurement values***; and
> >
> > outputting the SpO_2 measurement values to the mobile computing device; and

Apple Ex. 8, Cl. 13. The processing board then processes those detected signals and outputs SpO_2 measurement values. *Id*. It necessarily follows that the detected signals received by the processing board—which are the same detected signals output from the optical sensor as evidenced by "***said*** one or more signals"—are the ***un***processed signals (*i.e.*, raw signals). *See* Apple Ex. 33, ¶117.

The specification confirms that the signals output from the optical sensor and then received and processed by the processing board are "raw detected signals." The specification emphasizes "***raw detected signals***," "***raw*** physiological sensor data," "***raw*** physiological measurement data," "***raw*** sensor data," "***raw*** signals," and "***raw*** data" nearly 25 times, including the following:

> The processing module 130 drives operation of the sensor 110 and ***receives raw detected signals from the sensor 110***. The processing module 130 ***processes the raw detected signals*** to determine a physiological measurement.
>
> * * *
>
> The processing module 130 can filter ***raw physiological sensor data input from the sensor 110***, and the processing module 130 can provide filtered physiological parameter data to the mobile computing device for display or storage.
>
> * * *

MASIMO 2038
Apple v. Masimo
IPR2024-00241

> By providing a separate processing module 130 to mediate the data flow from the sensor 110 to the mobile device 160, the complex signal processing required for ***generating recognizable physiological parameters from raw sensor data can be handled by the processing module 130*** and not the mobile CPU.
>
> * * *
>
> At block 815, the processing module ***receives raw physiological sensor data from the senso***r. The processing module performs signal conditioning on the ***raw data at block 820***, for example any of the signal conditioning techniques described herein, to remove noise from the ***raw data*** and obtain physiological parameter data.

Apple Ex. 8, 6:3-7, 6:18-22, 7:3-8, 16:62-67; *see also id.*, 5:46-48, 6:23-57, 9:62-65, 10:30-34, 10:55-61, 11:7-11, 11:51-53, 17:22-32; Apple Ex. 34 at 217; *id.*, Appendix 4 at 1 (Masimo's validity contentions relying on specification disclosures of "raw detected signals" to argue for definiteness of "one or more signals …"). Consistent with these disclosures, the only figure showing data traveling from the sensor to the processing module, Figure 2 below, depicts a ***sensor*** outputting "***raw*** sensor data" to a ***processing module***:

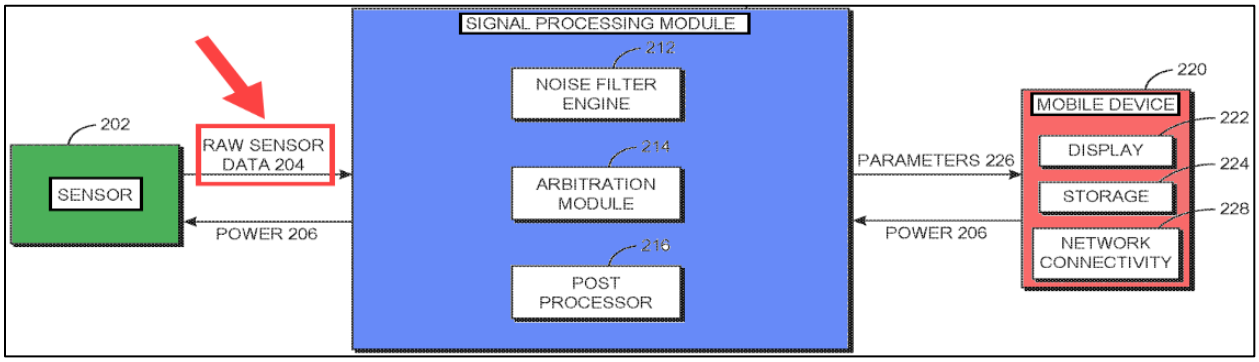

Masimo agrees that the signals at issue are "detected," yet disagrees with Apple's construction and fails to set forth its own construction. Masimo's argument that the phrase "one or more" is well understood (*supra* at 34) attacks a straw man, as Apple's construction encompasses "raw detected signal(s)"—both singular and plural. Moreover, the specification excerpts cited by Masimo concern raw detected signals. Apple Ex. 33, ¶¶120-123. Masimo also points to claims that recite "raw data" in a different patent (U.S. Patent No. 9,877,650) (*supra* at 35), but the presumption of claim differentiation applies to claims within the same patent—not

different patents. *See Kraft Foods, Inc. v. Int'l Trading Co.*, 203 F.3d 1362, 1368 (Fed. Cir. 2000) ("claim differentiation only creates a presumption that each claim ***in a patent*** has a different scope" and "does not mean that every limitation must be distinguished from its counterpart in another claim.").

3. Masimo's Reply Position

The parties agree that the phrase "one or more signals" refers to singular and plural and that the "signals" are detected. *Supra* at 36. That encompasses everything recited in the phrase "one or more signals." But Apple argues that the Court should limit the claimed "signals" to only "raw signals." *Id.*

Apple argues that the claims "make clear" that the "optical sensor outputs '***raw*** detected signals.'" *Id.* Specifically, Apple argues that the signal must be raw because the claim recites a "processing board" processing that signal. But Masimo's expert explained a POSA would understand it is common for sensors to perform preprocessing on signals. Masimo Ex. 13, ¶62. Apple's expert did not refute that explanation or address sensor preprocessing on a sensor at all. *See* Apple Ex. 33, ¶117. Apple also ignores that the claims recite "signals" that are "responsive to light from a light source attenuated by tissue of the user." Preprocessed signals are "responsive to" detected light. Masimo Ex. 45, ¶¶21-22.

Apple also relies on the specification's reference to "raw detected signals." *Supra* at 36-37. But the specification does not limit the sensor to outputting raw signals only. The specification discloses examples that do not specify the signals are "raw detected" signals. *See, e.g.*, '507 Patent at 4:46-51; 9:23-25; 4:67-5:1. As another example, certain embodiments use both a "digital processing board" and an "analog processing board" to process signals received from the sensor. *Id.* at FIG. 1C, 9:1-6, 9:62-65; *see also id.* at 19:18-26. Both boards receive "one or more signals" but one set would be digital and another analog. Masimo Ex. 45, ¶23. The specification therefore

does not limit the signals to one type only. And Apple never explains whether its "raw" construction refers to analog, digital, or both. Apple also does not address *Thorner*, *Johnson Worldwide*, and *InterDigital*, all of which explain that the Court should not limit a claim term when the specification is consistent with the broader definition.

Apple's argument regarding the file history of a related patent that pursued claims to "raw data" never suggests disregarding the evidence. Apple argues only that "the presumption of claim differentiation applies to claims within the same patent–not different patents." *Supra* at8. But Masimo cited the file history as extrinsic evidence to be considered, not for any presumption arising from the doctrine of claim differentiation. That file history evidences that Masimo used different language, "raw data," when specifically referring to raw data.

4. Apple's Sur-Reply Position

Masimo does not dispute (1) the claimed signals "are detected," (2) claim 13 requires the output sensor to send those signals ***to*** the processing board for processing, and (3) the specification emphasizes "raw detected signals" and does not disclose any other signals output by the sensor. Masimo also does not address ***its own reliance*** on the specification's disclosure of "raw detected signals" for its validity contention that "one or more signals" is not indefinite. *Supra* at 37.

Masimo's sole reliance on its expert to allege that "a POSA would understand it is common for sensors to perform preprocessing on signals" and that "preprocessed signals are 'responsive to' detected light" (*supra* at 38 (citing Masimo Ex. 13, ¶62; Masimo Ex. 45, ¶¶21-22)) improperly elevates general extrinsic arguments over specific intrinsic evidence. As explained in Apple's answering brief, ***in the '507 patent***, the "one or more signals" are raw, not pre-processed. *Supra* at 35-38.

In addition, Masimo repeats its allegation that "[t]he specification discloses examples that do not specify the signals are 'raw detected' signals." *Supra* at 38-39 (citing '507 Patent at 4:46-

MASIMO 2038
Apple v. Masimo
IPR2024-00241

51, 4:67-5:1, 9:23-25). But Apple and Dr. Warren previously explained why those passages disclose raw detected signals rather than processed signals. *Supra* at 37-38 (citing Apple Ex. 33, ¶¶120-123).

Further, Masimo's allegation regarding an embodiment that uses an analog and a digital processing board (*supra* at 39) is irrelevant. "Raw" data can exist in both analog and digital form. Apple Ex. 48, ¶72. And the disclosure Masimo cites for this embodiment says "the processing module 130 can perform signal processing on ***raw data received from the sensor*** …." Apple Ex. 8, 9:62-65.

Finally, Masimo's argument that the '507 claim language "one or more signals" means something different (*i.e.*, ***is differentiated***) from the claim language "raw data" in another patent (*supra* at 38-39) confirms Masimo improperly relies on claim differentiation across patents. *Supra* at 39-40.

F. "the processing board in data communication with the optical sensor and a mobile computing device including a display" ('507 Patent: Claim 13) [Term M-6]

Masimo's Proposal	Apple's Proposal
Plain and ordinary meaning	the processing board communicates data with—rather than is a part of—the optical sensor and a mobile computing device including a display

1. Masimo's Opening Position

The language of Claim 13 provides ample guidance for a jury to understand the limitation. The claim explains that the processing board is in data communication with both the optical sensor and the mobile computing device which has a display. Masimo Ex. 13, ¶¶64-65. Thus, no construction is necessary.

Apple replaces "in data communication" with "communicates data with—rather than is a part of" into the "processing board" phrase. Apple has not explained what could justify such a

MASIMO 2038
Apple v. Masimo
IPR2024-00241

blatant rewriting of the claim. The claim language refers only to the board being in data communication with the sensor and mobile device. It makes no mention of whether the board "is part of" another component. Moreover, Apple cannot justify adding a negative limitation to the claim (that the processing board is ***not*** "part of" the sensor or device). *Eko Brands, LLC v. Adrian Rivera Mayez Enters., Inc.*, 946 F.3d 1367, 1381 (Fed. Cir. 2020) (reversing construction adding negative claim limitation because there was no support in the claims or specification, no express disclaimer, and no lexicography supporting negative limitation); *see also Omega Eng'g, Inc. v. Raytek Corp.*, 334 F.3d 1314, 1322-23 (Fed. Cir. 2003).

2. <u>Apple's Answering Position</u>

The parties dispute whether the '507 patent's processing board can be a part of an optical sensor or a mobile computing device. The intrinsic evidence confirms the processing board is structurally separate from, rather than a part of, an optical sensor or a mobile computing device.

"Where a claim lists elements separately, the clear implication of the claim language is that those elements are distinct components of the patented invention." *Becton, Dickinson & Co. v. Tyco Healthcare Grp., LP*, 616 F.3d 1249, 1254 (Fed. Cir. 2010) (internal citations omitted); *Kyocera Senco Indus. Tools Inc. v. USITC*, 22 F.4th 1369, 1382 (Fed. Cir. 2022) ("The asserted claims list those elements separately … There is, therefore, a presumption that those components are distinct."). Here, claim 13 expressly recites as separate and distinct structural elements: (1) an optical sensor, (2) a processing board, and (3) a mobile computing device including a display:

> outputting, from an ***optical sensor*** of an SpO_2 measurement system, one or more signals responsive to light from a light source...
>
> via a ***processing board*** of the SpO_2 measurement system, the ***processing board*** in data communication with the ***optical sensor*** and a ***mobile computing device*** including a display:
>
> > receiving said one or more signals from the ***optical sensor***;
> >
> > processing said one or more signals to generate the SpO_2 measurement values; and

MASIMO 2038
Apple v. Masimo
IPR2024-00241

outputting the SpO_2 measurement values to the ***mobile computing device***; …

Apple Ex. 8, Cl. 13. As such, these structural elements are presumptively separate components.

Claim 13 also recites limitations that confirm these structural elements are not one and the same. The claim requires "the processing board ***in data communication with the optical sensor and a mobile computing device,"*** which highlights the distinctness of these elements. *Id*. The claim further requires that the processing board (1) "receive[s] said one or more signals ***from the output sensor,***" (2) "process[es]" them, and (3) "output[s] the SpO2 measurement values ***to the mobile communications device***." *Id*. Thus, these elements logically are not part of one another.

The specification confirms that the processing board is not part of a sensor or mobile computing device, including by teaching away from the "drawback" of using processors on a mobile computing device and lauding the benefits of a "separate processing module":

> ***One drawback of implementing physiological measurement technology on mobile computing devices is the processing overhead*** typically required for…such raw physiological measurement data.
>
> * * *
>
> The current generation of ***mobile processors is not well adapted to deal with the complexity and corresponding processing overhead*** of filtering raw physiological measurement data…
>
> * * *
>
> By providing a ***separate processing module 130 to mediate the data flow from the sensor 110 to the mobile device 160***, the complex signal processing required for generating recognizable physiological parameters from raw sensor data can be ***handled by the processing module 130 and not the mobile CPU***. Moving the signal processing calculations ***away from the mobile CPU*** frees it up for important core tasks as well as processing of mobile applications.
>
> * * *
>
> [C]omplicated software required to process raw signals…can be stored in the ***processing module 130 in a separate memory unit separate from the mobile device***.
>
> * * *
>
> Complex operations such as noise filtering and signal processing can require specialized processing or significant computational overhead, ***such that a typical user mobile device can not have sufficient processing power***…[T]he ***processing module 130 can perform signal processing on raw data received from the sensor***

MASIMO 2038
Apple v. Masimo
IPR2024-00241

and can provide physiological parameters as an output to a display and/or storage device.

Id., 6:23-27, 6:33-36, 6:38-41, 7:3-10, 9:58-65; *see also id*., 4:65-5:13, Figs. 1A-C, 2-3, 5.

The file history supports Apple's construction. The examiner rejected claims of the '507 patent's parent application—which has the same specification as the '507 patent—finding that the Lisogurski prior art (Apple Ex. 15) "teaches a physiological monitoring system comprising a ***sensor***… a ***mobile computing device***… and a cable including a ***processing board***." Apple Ex. 10, '650 Prosecution History, 8/13/15 Office Action at 6.

'507 Patent & Parent: Fig. 1A	**Lisogurski Embodiment 1**	**Lisogurski Embodiment 2**
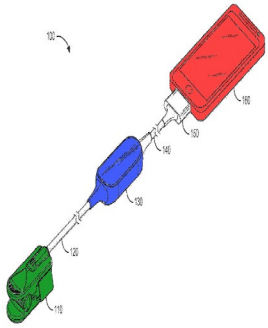	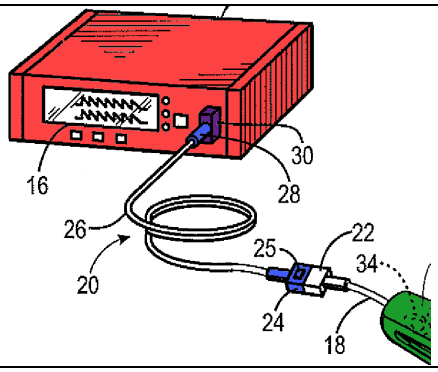	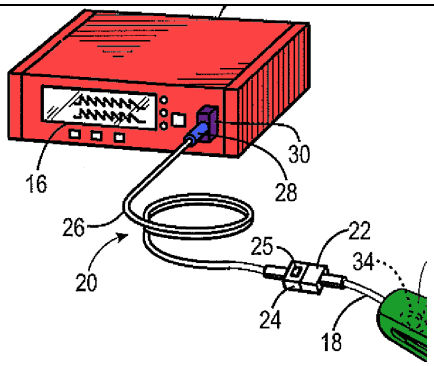

Distinguishing the invention, the applicant asserted that, in Lisogurski, (1) "***the processing aspects are split between the sensor-side cable connector 24 and the monitor-side cable connector 28***" or (2) the "***processing aspects are contained in the monitor-side cable connector 28***, which ***couples directly*** with the ***monitor connector 30***." *Id*., 2/12/2016 Response to Office Action at 10-11. The applicant thus confirmed that the invention does not include processing performed at the monitor rather than on a separate remote processing module. *See Microsoft Corp. v. Multi-Tech Sys., Inc.*, 357 F.3d 1340, 1350 (Fed. Cir. 2004) ("Any statement of the patentee in the prosecution of a related application as to the scope of the invention would be relevant to claim construction . . ."). Since the '507 patent's "mobile computing device" corresponds to Lisogurski's monitor

MASIMO 2038
Apple v. Masimo
IPR2024-00241

(Apple Ex. 10, 8/13/15 Office Action at 6), these prosecution statements confirm that the processing board is not part of an optical sensor or a mobile computing device including a display.

3. Masimo's Reply Position

Claim 13 is a method claim and recites that the processing board is in data communication with both the optical sensor and the mobile computing device which has a display. Apple Ex. 13, ¶¶64-65. The claim's plain language provides ample guidance for a jury. It simply lays out the function of the processing board. The limitation never specifies any structural relationship between the components, and thus never says whether the board "is structurally separate from, rather than a part of" another component. *Supra* at 41. Yet, Apple argues that the processing board is ***not*** "part of" the sensor or device. *Id.* at 40-41. Masimo explained the caselaw cautioning against such a negative limitation, but Apple had no response to it.

Instead, Apple dedicates pages of briefing to argue that "processing board" in the claim recites separate structure from the "optical sensor" and "mobile computing device." *Id.* at 41-44. Apple relies on cases explaining when to presume elements in a claim are distinct components. Here, there is no dispute that the "processing board," "optical sensor," and "mobile computing device" are distinct components. But nothing supports Apple's requirements that the "processing board" be "structurally separate from, rather than a part of" an optical sensor or mobile computing device, whatever that quoted phrase means.

Apple relies on specification portions reciting the benefits of separating the physiological measurement signal processing from the processor on the mobile computing device. *Supra* at 42-43. That teaching says nothing about separating the "processing board" and "optical sensor."

Apple's analysis of the file history for a related patent provides no insight into the claimed "processing board." *Id.* at 43-44. Apple quotes statements about "processing aspects" ***in Lisogurski*** being in cable connectors. *Id.* The statements explain the prior art. They say nothing

about the claims at issue in that pending parent application. And, thus, Apple's quotes say nothing about where the processing occurs in the '507 Patent's method claims. Yet, Apple draws the conclusion that those statements somehow "confirmed" that "***the invention does not include*** processing performed at the monitor rather than the remote processing module." *Id.* That is incorrect. The statements do not even mention the relevant claim phrase "processing board" at all.

4. <u>Apple's Sur-Reply Position</u>

Masimo fails to address, let alone rebut, Apple's points demonstrating that the processing board is not part of an optical sensor or a mobile device: (1) *Becton* holds that separately-recited elements are presumptively distinct components; (2) the "from" and "to" claim language confirms that the elements are not part of one another; (3) the specification teaches away from the "drawback" of processing on a mobile computing device and lauds the benefits of a "separate processing module"; and (4) the patentee distinguished prior art that included processing aspects as part of the mobile computing device. *Supra* at 41-44. Masimo concedes "that the 'processing board,' 'optical sensor,' and 'mobile computing device' are distinct components." *Id.* at 44.

Masimo provides no basis for disregarding the intrinsic evidence, let alone contradicting it. *First*, Masimo criticizes Apple for not responding to a conclusory case law citation, but Masimo erroneously relied on a dissent. *Supra* at 41 (citing page 1381 of *Eko Brands LLC v. Adrian Rivera Mayez Enters., Inc.*, 946 F.3d 1367 (Fed. Cir. 2020)). The majority opinion ***upheld*** the construction at issue. *See Eko Brands*, 946 F.3d at 1375. And in any event, Apple merely seeks to confirm the structural distinctness of the elements. *Second*, the intrinsic evidence not only recites the benefits of separating signal processing from the mobile device but also makes clear that the processing board receives signals "from" the sensor. *Supra* at 43 (citing Apple Ex. 8, Cl. 13, 9:58-65); *see also* Apple Ex. 8, Abstract, 6:3-22, 10:55-58. *Third*, Masimo fails to recognize that the patentee distinguished prior art based on the "monitor-side" location of processing aspects.

MASIMO 2038
Apple v. Masimo
IPR2024-00241

Supra at 43 (quoting Apple Ex. 10, '650 Pros. History, 2/12/2016 Office Action Response at 10-11). Masimo's remaining assertions are conclusory and without citations to evidence.

G. "via a processing board…receiving…processing…outputting" ('507 Patent: Claim 13) [Term M-7]

Masimo's Proposal	Apple's Proposal
Plain and ordinary meaning	the same processing board performs the receiving, processing, and outputting steps

1. Masimo's Opening Position

The relevant portion of Claim 13 recites:

> ***via a processing board*** of the SpO2 measurement system, the processing board in data communication with the optical sensor and a mobile computing device including a display:
> ***receiving*** said one or more signals from the optical sensor;
> ***processing*** said one or more signals to generate the SpO2 measurement values; and
> ***outputting*** the SpO2 measurement values to the mobile computing device.

Masimo proposes no construction. Apple does not actually define or construe any of the words at issue either. Rather, Apple proposes that the Court rule that the emphasized words require that "the same processing board performs the receiving, processing, and outputting steps."

Apple ignores that the use of "an indefinite article 'a' or 'an' in patent parlance carries the meaning of 'one or more'." *See Baldwin Graphics Sys. v. Sibert, Inc.*, 512 F.3d 1338, 1342 (Fed. Cir. 2008). Moreover, "[t]he subsequent use of definite articles 'the' or 'said' in a claim to refer back to the same claim term does not change the general plural rule, but simply reinvokes the non-singular meaning." *Baldwin*, 512 F.3d at 1342-43. An exception to this rule "only arises where the language of the claims themselves, the specification, or the prosecution history ***necessitates*** a departure from the rule." *Id.* at 1343. Thus, Apple's proposal violates the case law.

MASIMO 2038
Apple v. Masimo
IPR2024-00241

Moreover, nothing else in the claim or in the specification suggests a different meaning. The various steps recited in this claim say nothing about performance by only one processor. Masimo Ex. 13, ¶¶68-70. Further, the specification explains that some embodiments use multiple processing boards. Specifically, some embodiments use both a "digital processing board" and an "analog processing board" to process signals received from the sensor. '507 Patent at FIG. 1C, 9:1-6, 9:62-65; *see also id.* at 19:18-26 (modules can be implemented using "a general purpose processor, a digital signal processor (DSP), an application specific integrated circuit (ASIC), a field programmable gate array (FPGA) or other programmable logic device, discrete gate or transistor logic, discrete hardware components, ***or any combination thereof***").

Apple cites various portions of the specification and file history that discuss the processing board, but none of this disclosure necessitates a departure from the general rule that 'a' in a patent claim means one or more. As of this time, Apple has not explained how those citations help it.

2. <u>Apple's Answering Position</u>

Masimo attacks a straw man; Apple has never contended that the claims permit only one processing board. *Supra* at 46-47. Apple merely seeks to confirm that, regardless of the number of processing boards, at least one of them must perform the receiving, processing, and outputting steps. Masimo improperly treats this limitation as met if each step were performed by a different processing board (*e.g.*, a first processing board performs the receiving step, a second processing board performs the processing step, and a third processing board performs the outputting step).

A claim's language and structure may demonstrate that a limitation has antecedent basis in a prior claim term. In *Salazar v. AT&T Mobility LLC*, the Federal Circuit construed "a microprocessor for generating…, said microprocessor creating…, a plurality of parameter sets retrieved by said microprocessor…, [and] said microprocessor generating…" to mean "one or more microprocessors, at least one of which is configured to perform the generating, creating,

MASIMO 2038
Apple v. Masimo
IPR2024-00241

retrieving, and generating functions." 64 F.4th 1311, 1317-18 (Fed. Cir. 2023). It found that "while the claim term 'a microprocessor' does not require there be only one microprocessor, the subsequent limitations referring back to 'said microprocessor' require that at least one microprocessor be capable of performing each of the claimed functions." *Id*. As such, "it does not suffice to have multiple microprocessors each able to perform just one of the recited functions; the claim language requires at least one microprocessor capable of performing each of the recited functions." *Id*.

In *Convolve, Inc. v. Compaq Computer Corp.*, the Federal Circuit construed a "[u]ser interface for … working with a processor … comprising … means for causing the processor to output commands to the data storage device" to "require the user interface to work with a single processor in performing all of the claim steps." 812 F.3d 1313, 1321 (Fed. Cir. 2016). The Federal Circuit found that "[t]his reference to 'the processor,' referring back to the 'a processor' recited in preamble, supports a conclusion that the recited user interface is 'operatively working with' the same processor to perform all of the recited steps." *Id*.

In *In re Varma*, the Federal Circuit construed "a statistical analysis request corresponding to two or more selected investments" to mean that "at least two investments must be the subject of each statistical analysis." 816 F.3d 1352, 1362-63 (Fed. Cir. 2016). The Federal Circuit observed:

> For a dog owner to have "a dog that rolls over and fetches sticks," it does not suffice that he have two dogs, each able to perform just one of the tasks. In the present case, no matter how many requests there may be, no matter the variety of the requests the system may receive, the system must be adapted to receive a request that itself corresponds to at least two investments.

Id. ("[T]he the question is whether 'a' can serve to negate what is required by the language following 'a' …. It cannot.").

Like in *Salazar*, *Convolve*, and *Varma*, the claim language and structure here make clear that—regardless of the number of processing boards—***at least one*** of them (*i.e.*, the same

MASIMO 2038
Apple v. Masimo
IPR2024-00241

processing board) must itself perform the recited receiving, processing, and outputting steps. Specifically, the claim (1) recites method steps taking place "via a processing board"; (2) refers back to that same processing board using the definite article "the" by subsequently reciting "the processing board in data communication with … "; and (3) refers back to that same processing board yet again by subsequently reciting the "receiving," "processing," and "outputting" steps as corresponding sub-limitations beneath "the processing board" limitation:

> via a ***processing board*** of the SpO2 measurement system, ***the processing board*** in data communication with the optical sensor and a mobile computing device including a display:
>
> ***receiving*** said one or more signals from the optical sensor;
>
> ***processing*** said one or more signals to generate the SpO2 measurement values; and
>
> ***outputting*** the SpO2 measurement values to the mobile computing device…

Apple Ex. 8, Cl. 13. As such, at least one processing board must itself satisfy all sub-limitations. The specification confirms that the same processing board performs the receiving, processing, and output steps. *Id*., 4:67-5:4 ("the sensor data is transmitted from sensor 110… to the processing module 130…to provide output data for display on the smartphone 160."); 6:7-22; 9:47-65.

Masimo's reliance on the "one or more" meaning of "a" attacks a strawman. *Supra* at 46-47. Apple does not contend that the claim precludes ***additional*** processing boards that ***also*** perform receiving, processing, or outputting steps. Apple merely contends that the claim language and structure require ***at a minimum*** at least one processing board that itself performs all those recited steps. And contrary to Masimo's characterization of *Baldwin Graphics Sys.*, 512 F.3d at 1342 (*supra* at 46-47), the Federal Circuit has made clear that "we did not hold in *Baldwin* that using an indefinite article somehow displaces the antecedent basis rule." *Salazar*, 64 F.4th at 1316. Finally, Masimo's citation to an embodiment that uses a digital processing board and an analog processing board to process signals (*supra* at 47) does not undermine Apple's construction, which

MASIMO 2038
Apple v. Masimo
IPR2024-00241

merely requires that at least one processing board performs the receiving, processing, and outputting steps, and does not preclude additional processing boards.

3. Masimo's Reply Position

The parties dispute whether the accused device must have at least one processing board that completes each claimed step of receiving, processing, and outputting. But the claim never says that one board must complete all three steps. Rather, the claim says merely that each step must be performed by a processing board that is in data communication with the optical sensor and a mobile computing device.

Apple's reliance on *Salazar* is misplaced. *Supra* at 48 (citing *Salazar*, 64 F.4th at 1317-18). *Salazar* acknowledged the general rule that the article "a" refers to "one ***or more***." *See Salazar*, 64 F.4th at 1315 (citing *Baldwin*, 512 F.3d at 1342-43). *Salazar* departed from the general rule because the claim there necessitated a singular construction. *Salazar*, 64 F.4th at 1318. Specifically, that claim recited "a microprocessor for generating…, ***said microprocessor*** creating…, a plurality of parameter sets retrieved by ***said microprocessor***…, [and] ***said microprocessor*** generating…." *Id.* Relying on the "said microprocessor" language, that court construed this phrase to mean "one or more microprocessors, at least one of which is configured to perform the generating, creating, retrieving, and generating functions." *Id.* at 1317-18.

Here, however, the claim does ***not*** refer to "said processing board" or "the processing board" performing these functions. Instead, the claim recites:

> ***via a processing board*** of the SpO2 measurement system, the processing board in data communication with the optical sensor and a mobile computing device including a display:
>
> ***receiving*** said one or more signals from the optical sensor;
>
> ***processing*** said one or more signals to generate the SpO2 measurement values; and
>
> ***outputting*** the SpO2 measurement values to the mobile computing device.

MASIMO 2038
Apple v. Masimo
IPR2024-00241

The claim thus recites that the receiving, processing, and outputting steps occur "via a processing board." Because "via a processing board" means "via one ***or more*** processing boards," the normal reading of this claim is that the receiving, processing, and outputting functions can be accomplished by one or more processing boards working together. *See Baldwin*, 512 F.3d at 1342. Indeed, as Apple acknowledges, the specification discloses an embodiment that uses multiple processing boards. *Supra* at 49. And the specification explains that software functions can be performed using combinations of processors. '507 Patent at 19:18-26. At least the "processing" performed "via a processing board" in Claim 13 is a software function. Masimo Ex. 45, ¶¶24-27.

Apple argues that *Salazar* supports its proposed construction because the claim later recites "the processing board." *Supra* at 47-50. But Claim 13 recites "the processing board" in the context of "the processing board in data communication with the optical sensor and a mobile computing device." Claim 13 does not use "***the*** processing board" in the receiving, processing, and outputting steps. Thus, Claim 13 requires only that the one or more boards that perform the receiving, processing, and outputting steps each be in data communication with the optical sensor and mobile computing device. Nothing "necessitates a departure from the rule" that "a" means one or more and subsequent references to "the" simply "reinvokes the non-singular meaning." *Baldwin,* 12 F.3d at 1342-43.

Apple also relies on *Convolve*. *Supra* at 48 (citing 812 F.3d at 1321). But that fails for similar reasons. Like *Salazar*, the court in *Convolve* relied on "the processor" language in "[u]ser interface for … working with a processor … comprising … means for causing ***the processor*** to output commands to the data storage device" to construe the phrase "require the user interface to work with a single processor in performing all of the claim steps." 812 F.3d at 1321. Here, Claim 13 does ***not*** recite that "the processing board" performs the claimed steps.

MASIMO 2038
Apple v. Masimo
IPR2024-00241

Apple also argues that *In re Varma* supports its construction. *Supra* at 48-49 (citing 816 F.3d at 1362-63). In *Varma*, the court construed the phrase "a statistical analysis request corresponding to two or more selected investments" to mean that "at least two investments must be the subject of each statistical analysis." *In re Varma*, 816 F.3d at 1363. But the claim language there required that a single request correspond to at least two investments. *Id.* Here, the plain reading of the claim is that the receiving, processing, and outputting functions are accomplished via one or more processing boards, as explained above.

4. <u>Apple's Sur-Reply Position</u>

As Masimo now agrees, the issue is whether Claim 13 requires at least one processing board that performs the three recited receiving, processing, and outputting steps. *Supra* at 50-52. Masimo fails to rebut Apple's cases and intrinsic evidence, which demonstrate that the answer is yes. To be clear, neither party contends that Claim 13 precludes additional processors.

Masimo does not dispute that the definite articles "the" and "said" indicate a claim element has antecedent basis that refers back to the same earlier-recited element, but erroneously suggests that Claim 13 does not say "the processing board" when it clearly does. *Id.* Masimo emphasized words other than "the processing board," even though that phrase appears in the claim:

Claim 13 In Masimo's Brief (*supra* at 50)	Claim 13 In The '507 Patent
via a processing board of the SpO2 measurement system, the processing board in data communication with the optical sensor and a mobile computing device including a display: ***receiving*** said one or more signals from the optical sensor; ***processing*** said one or more signals to generate the SpO2 measurement values; and ***outputting*** the SpO2 measurement values to the mobile computing device.	via a processing board of the SpO2 measurement system, the processing board in data communication with the optical sensor and a mobile computing device including a display: receiving said one or more signals from the optical sensor; processing said one or more signals to generate the SpO2 measurement values; and outputting the SpO2 measurement values to the mobile computing device; and

Masimo also deleted the paragraph indentation confirming that the "receiving, "processing," and "outputting" sub-limitations correspond to "the processing board."

MASIMO 2038
Apple v. Masimo
IPR2024-00241

Masimo's sleight of hand fails to rebut Apple's showing that the claim language and structure—including its use of the definite article "the" and its indented sub-limitations—demonstrates antecedent basis that refers back to the same processing board, and thus at least one processing board must itself satisfy the "receiving, "processing," and "outputting" sub-limitations.

H. "via an application…generating…displaying…displaying" ('507 Patent: Claim 13) / "via the application" ('507 Patent: Claims 14, 16, 17, 20) [Term M-8]

Masimo's Proposal	Apple's Proposal
Plain and ordinary meaning	the same application performs the generating, displaying, and displaying steps / via the same application that performs the generating, displaying, and displaying steps of claim 13

1. Masimo's Opening Position

Claim 13 recites in, relevant part:

> ***via an application*** configured to execute commands on the mobile computing device:
> ***generating*** a graphical user interface having a plurality of display portions;
> ***displaying***, in at least one portion of the plurality of display portions, a representation of a physiological parameter of a plurality of physiological parameters comprising at least the SpO2 measurement values; and
> ***displaying***, in a different portion of the plurality of portions, a plurality of user inputs configured to allow the user to interact with at least one of the plurality of display portions or the application.

Dependent Claims 14, 16, 17, and 20 then further recite performing additional functions "via the application." Masimo proposes no construction of the emphasized words. Apple does not actually define or construe any of those words either. Rather, Apple proposes that the Court rule that the emphasized words require that "the same application performs the generating, displaying, and displaying steps."

Apple's proposed construction ignores the rule that "an application" means one or more applications and the subsequent reference to "the application" means the one or more applications.

MASIMO 2038
Apple v. Masimo
IPR2024-00241

See Baldwin Graphics at 1342. None of the claim language necessitates that a single application performs all of the functions. Masimo Ex. 13, ¶¶77-79. And the specification specifically describes embodiments of the invention as using multiple applications. '507 Patent at 10:43-46 ("The mobile device 220 can also include storage 224, which can be configured for storage of parameters 226 and parameter history data and/or ***software applications*** for managing the data and sensor 110.").

Apple cites to various portions of the specification and file history that discuss an application, but none of these citations necessitate that the steps of the claims be performed by a single application. As of this time, Apple has not explained how those citations help it.

2. <u>Apple's Answering Position</u>

For the same reasons as discussed for "via a processing board," Apple seeks to confirm that, regardless of the number of applications, at least one of them must perform the generating, displaying, and applicable dependent-claim steps. Masimo, however, would treat this limitation as satisfied even if each step were performed by a different application (*e.g.*, a first application performs the generating step and a second application performs the displaying steps).

The claim language and structure here make clear that—regardless of the number of applications—***at least one*** of them (*i.e.*, the same application) must itself perform the recited generating, displaying, and applicable dependent-claim steps.

> …***via an application*** configured to execute commands on the mobile computing device:
>
> > ***generating*** a graphical user interface having ***<u>a</u> plurality of display portions***;
> > ***displaying***, in at least one portion of ***<u>the</u> plurality of display portions***…and
> > ***displaying***, in a different portion of ***<u>the</u> plurality of portions***, a plurality of user inputs configured to allow the user to interact with at least one of the plurality of display portions or ***the application***.
>
> * * *
>
> 14. The computer-implemented method of claim 13, further comprising, ***via <u>the</u> application***:

MASIMO 2038
Apple v. Masimo
IPR2024-00241

> ***performing*** a trend analysis on received SpO2 measurement values; and
> ***displaying*** results of the trend analysis in at least one portion of ***<u>the</u> plurality of display portions***.

Apple Ex. 8, Cls. 13-14. The claims refer back to the same application using the definite article "the," recite the steps as sub-limitations beneath the "application" limitation, and the two "displaying" steps refer to "***the*** plurality of display portions" from the "generating" step. *See Salazar,* 64 F.4th at 1317; *Convolve,* 812 F.3d at 1321; *Varma*, 816 F.3d at 1362. Masimo's citation to a multiple-application embodiment (*supra* at 53-54) is unavailing because Apple's construction merely requires that ***at least one*** application perform the recited steps—it does not preclude additional applications.

3. <u>Masimo's Reply Position</u>

Relying on *Salazar*, *Convolve,* and *Varma*, Apple argues that a single application must perform the generating, displaying, and displaying steps recited by the claims. But, as Masimo explained with respect to the "via a processing board" phrase, the claim does not recite that "the" or "said" application perform those steps. Instead, the claim recites:

> ***via an application*** configured to execute commands on the mobile computing device:
> ***generating*** a graphical user interface having a plurality of display portions;
> ***displaying***, in at least one portion of the plurality of display portions, a representation of a physiological parameter of a plurality of physiological parameters comprising at least the SpO2 measurement values; and
> ***displaying***, in a different portion of the plurality of portions, a plurality of user inputs configured to allow the user to interact with at least one of the plurality of display portions or the application.

Because "an application" means "one or more applications," the generating, displaying, and displaying steps can be performed by multiple applications.

Apple argues that the claim should be limited to a single application because the generating step refers to "a plurality of display portions" and the subsequent display steps refer to "the

MASIMO 2038
Apple v. Masimo
IPR2024-00241

plurality of the display portions." But multiple applications could operate on a plurality of display portions. For example, one application could generate and display one display portion and another application could generate and display a separate display portion. Together, the applications would generate and display a ***plurality*** of display portions. Thus, the "plurality of display portions" language does not require a single application to display and generate all display portions.

Apple concedes that the specification discloses embodiments operating with multiple applications. *Supra* at 54-55. Apple dismisses this disclosure by arguing that Apple's construction "does not preclude additional applications." But that misses the point of the specification. It describes multiple "***software applications*** for managing the data and sensor 110." '507 Patent at 10:43-46. Like the claims, the specification does not limit the "generating," "displaying," and "displaying" steps to all being performed by a single application. Apple's construction would preclude multiple applications from performing the "generating," "displaying," and "displaying" steps together. That is improper.

Apple argues that dependent claims reciting "the application" somehow limit the independent claim. *Supra* at 54-55. But *Convolve*, which Apple relies on, found that claims that recited only "a processor" performing various functions were not limited to a single processor performing the functions, despite other claims that recited "the processor." *Convolve*, 812 F.3d at 1321. And *Baldwin* explains that "a" means one or more and subsequent references to "the" simply "reinvokes the non-singular meaning." *Baldwin,* 12 F.3d at 1342-43. Even if "the application" in the dependent claims were singular, it would simply refer to one of the multiple applications performing the generating, displaying, or displaying steps of the independent claim.

MASIMO 2038
Apple v. Masimo
IPR2024-00241

4. Apple's Sur-Reply Position

Like the preceding term, the issue is whether the claims require at least one application that performs the recited generating, displaying, and dependent-limitation steps. Masimo fails to rebut Apple's case law and intrinsic evidence citations which demonstrate that the answer is yes.

Claims 13 and 14 recite "***the*** application" and the functions as indented sub-limitations:

Claim 13 In Masimo's Brief (*supra* at 55-56)	Claim 13 In The '507 Patent
via an application configured to execute commands on the mobile computing device: ***generating*** a graphical user interface having a plurality of display portions; ***displaying***, in at least one portion of the plurality of display portions, a representation of a physiological parameter of a plurality of physiological parameters comprising at least the SpO2 measurement values; and ***displaying***, in a different portion of the plurality of portions, a plurality of user inputs configured to allow the user to interact with at least one of the plurality of display portions or the application.	via an application configured to execute commands on the mobile computing device: generating a graphical user interface having a plurality of display portions; displaying, in at least one portion of the plurality of display portions, a representation of a physiological parameter of a plurality of physiological parameters comprising at least the SpO2 measurement values; and displaying, in a different portion of the plurality of portions, a plurality of user inputs configured to allow the user to interact with at least one of the plurality of display portions or the application.

The application generates "the plurality of display portions." Masimo's citation to "software applications" is unavailing since Apple's construction merely requires at least one that performs all recited steps.

> 14. The computer-implemented method of claim 13, further comprising, via the application:
> performing a trend analysis on received SpO2 measurement values; and
> displaying results of the trend analysis in at least one portion of the plurality of display portions.

I. "cavity" ('911 Patent: Claims 1, 10) [Term M-9]

Masimo's Proposal	Apple's Proposal
Plain and ordinary meaning	a hollowed-out space within a solid body

1. Masimo's Opening Position

Claims 1 and 10 recite "at least three LEDs recessed into a cavity." Masimo proposes that no construction is necessary of the word "cavity." The language surrounding "cavity" conveys that the "cavity" is used according to its ordinary meaning, namely "a hollow space; hole." Masimo Ex. 6 at 272; Masimo Ex. 13, ¶¶80-84. The "cavity" is obviously the space into which the "LEDs" are "recessed." *See* Masimo Ex. 13, ¶¶80-82. And in view of the claim language, a jury will readily understand what "cavity" means. *See id.*

MASIMO 2038
Apple v. Masimo
IPR2024-00241

The specification also uses "cavity" consistent with this ordinary meaning. The specification describes "an emitter assembly cavity 3040" (red) that "accommodates the emitter assembly 500" (blue), as shown below. '911 Patent at 14:53-63.

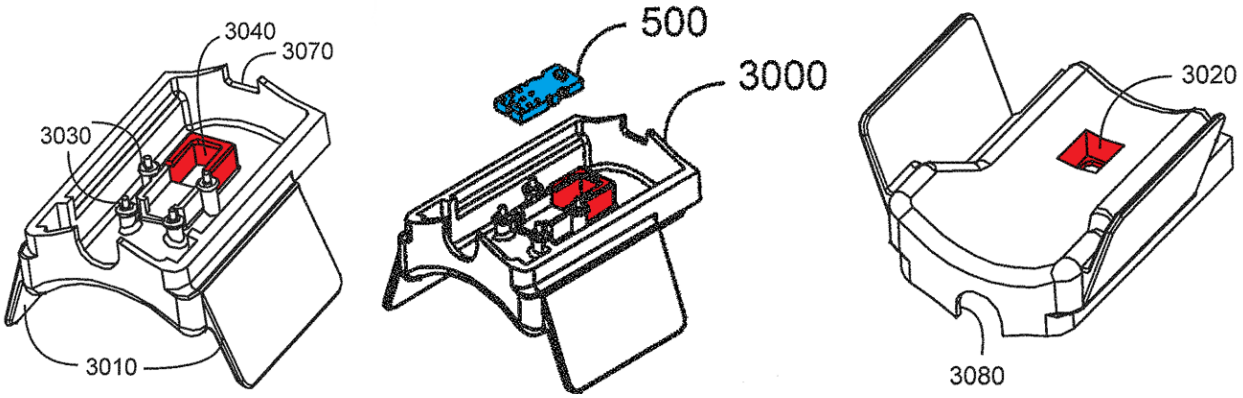

FIG. 30B **FIG. 46** **FIG. 30A**

Id. at FIGS. 30B, 46 (excerpted), 30A (showing opening or window 3020 of cavity (red) from other side of device). Thus, the Court need not construe the term.

Nevertheless, in a noninfringement-driven argument, Apple proposes limiting the claimed "cavity" to "a hollowed-out space within a solid body." But nothing in the intrinsic evidence supports Apple's narrowing construction. *See generally* '911 Patent. To the contrary, as shown above in FIGS. 30B and 46, the specification explicitly shows the cavity (red) is not "hollowed-out" of a "solid body." Apple's proposed construction thus plainly contradicts the intrinsic evidence and should be rejected.

2. Apple's Answering Position

The parties dispute whether "cavity" means "a hollowed-out space within a solid body," as Apple proposes, or merely any "hole," as Masimo now alleges. *Supra* at 57-58.

Claims 1 and 10 require "at least three LEDs recessed into a ***cavity***." The parties agree that "cavity" is used according to its ordinary meaning. *Id.* The ordinary meaning of "cavity" is "a hollowed-out space within a solid body." *See* Apple Ex. 33, ¶¶151, 162; Apple Ex. 26 ("cavity …

MASIMO 2038
Apple v. Masimo
IPR2024-00241

1 ***a hollow within a solid body*** …"); Apple Ex. 25 ("cavity … 1 : an unfilled space ***within a mass***; esp : a ***hollowed-out space*** …"). It is not any mere "hole."

The intrinsic evidence confirms that the recited "cavity" is a hollow space within a solid body—not any "hole." The claim requirement of "at least three LEDs ***recessed into*** a cavity" (Apple Ex. 17, Cls. 1, 10) makes clear that the "cavity" secures electronic equipment. The specification gives two examples of a "cavity," both of which "accommodate" electronic equipment. The specification first teaches "an emitter assembly cavity 3040" that "accommodates the emitter assembly." *Id*., 14:53-63. The specification also teaches "a shoe box cavity 3120 [that] accommodates a shoe box 3200" which in turn "accommodates the detector assembly 2400." *Id*., 15:4-15.

Figures 30B, 30C, and 30E (as well as 33B, 33C, 33E, and 46) illustrate the ***emitter assembly cavity 3040*** as bounded by a solid U-shaped structure (highlighted red).

Fig. 30B	Fig. 30C	Fig. 30E
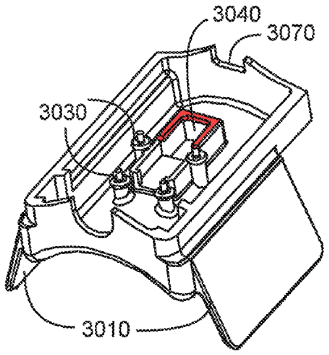	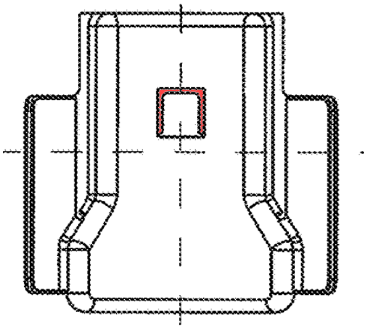	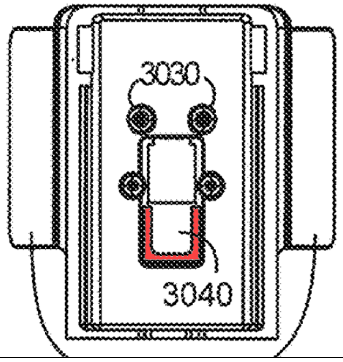

Figures 31A-F similarly illustrate shoe box cavity 3120 as bounded by a solid structure. The depicted cavities are not mere holes, they are hollow spaces within a solid body. Apple Ex. 33, ¶154.

Masimo's overbroad position that a "cavity" is a mere "hole" is unsupported. Contrary to Masimo's suggestion, item 3020 from Figure 30A is "light emitter window 3020"—which the

patent does ***not*** identify as a cavity. Apple Ex. 17, 14:58-60. The fact that item 3020 is not a cavity confirms not all holes are cavities. Further, the specification elsewhere uses the word "hole," which suggests that "cavity" means something different than a mere "hole." *Id.*, 11:56-58; 13:34-37.

3. <u>Masimo's Reply Position</u>

The parties agree that the Court should construe "cavity" to have its plain meaning but dispute that meaning. *Supra* at 58-59. Masimo proposes the plain meaning of "cavity" is "a hollow space; hole" which the jury will understand without construction. *Id.* at 58. Apple agrees with respect to "a hollow space." *Id.* at 59 ("the recited 'cavity' is a hollow space"; "[t]he depicted cavities . . . are hollow spaces"). But Apple seeks to narrow "cavity" in two ways, both of which are improper.

First, Apple argues the claimed "cavity" must be "hollowed-out." *Id.* But nothing in the intrinsic evidence describes, much less requires, how the cavity was made. *See, e.g.*, *Cont'l Cirs. LLC v. Intel Corp.*, 915 F.3d 788, 799 (Fed. Cir. 2019) (improper to add process limitation where patentee has not "made clear that the process steps are an essential part of the claimed invention"). Second, Apple argues the cavity must be "within a solid body." *Supra* at 57-58. But again, nothing in the intrinsic evidence describes the cavity as being located in a solid body.

Apple begins by relying on extrinsic evidence. Specifically, Apple relies on dictionary two definitions. *Id.* Apple's construction is an amalgamation of only parts of those two definitions. Apple takes "within a solid body" from its first definition (Apple Ex. 26) and "hollowed out space" from its second (Apple Ex. 25). But Apple and its expert never explain the rationale for selecting those definitions, much less combining them. Apple also never explains how its definitions support going beyond the "hollow space" that the parties agree falls within the plain meaning of "cavity."

MASIMO 2038
Apple v. Masimo
IPR2024-00241

Apple next relies on its expert (Warren) to apply its construction to the patent figures. *Supra* at 59-60. Specifically, Apple argues that the figures "illustrate the emitter assembly cavity 3040 as bounded by a solid U-shaped structure." *Supra* at 59. But as shown below, the "U-shaped structure" (left) helps form only a portion of the cavity (right).

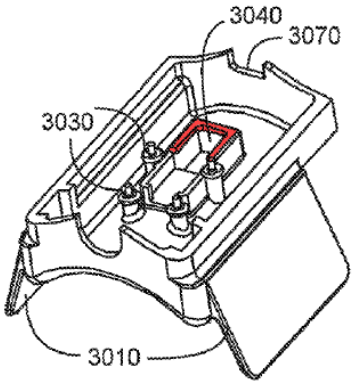

Apple's Incorrect Interpretation of Cavity 3040
(*supra* at 58)

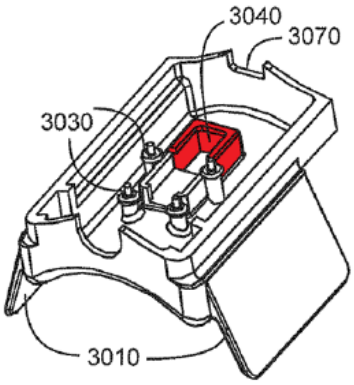

Cavity 3040
(*supra* at 57)

Apple and Warren inexplicably omitted the rest of the structure labeled 3040. Cavity 3040 includes both the U-shaped structure (that Apple relies on) and the underlying sidewalls (that Apple ignores). And Apple's highlighting shows that the cavity is formed from multiple pieces. Even if Apple were correct that the cavity 3040 was formed from one piece (it is not), it provided no reason to limit the claims to that embodiment. *See, e.g.*, *Phillips*, 415 F.3d at 1323 ("[W]e have repeatedly warned against confining the claims to [specification] embodiments.").

Apple also relies on the shoe box cavity 3120. *Supra* at 60. But nothing in the specification describes detector cavity 3120 as "a solid structure" as Apple argues. Moreover, that structure 3120 is for the detector ('911 Patent at 15:4-15), not the emitter.

The Court should also reject Apple's construction because "hollowed-out" and "within a solid body" needlessly complicate the simple word "cavity." *See, e.g.*, *Oracle Corp. v. Parallel Networks,* LLP, No. CIV.06-414-SLR, 2008 WL 5156117, at *1 (D. Del. Dec. 4, 2008) (rejecting construction because it "adds unnecessary complexity to the phrase").

MASIMO 2038
Apple v. Masimo
IPR2024-00241

Finally, Apple argues that some holes are not cavities, pointing to item 3020 in FIG. 30A. That is true because item 3020 is an opening to the cavity, but unlike a cavity, an opening has no depth. No reasonable juror would confuse holes having no depth with the claimed cavity, which necessarily has depth because the claims recite that the LEDs are "***recessed into*** a cavity."

4. Apple's Sur-Reply Position

The parties agree that "cavity" includes the concept of "a hollow space." In its reply, Masimo admits that some holes are not cavities (*supra* at 60), which fatally undermines its construction of a "cavity" as any "hollow space; hole." Masimo also fails to rebut the intrinsic evidence and dictionary definitions cited in Apple's answering brief that explain precisely how a "cavity" differs from a "hole," namely that a "cavity" is a hollow space ***within a solid body***. *Supra* at 60-62. Masimo's quibble that Apple does not explain why its construction combines a "hollow space" and "within a solid body" makes no sense—the dictionary definitions themselves define "cavity" in this manner. In addition, Apple highlighted the surface of the U-shaped structure within which cavity 3040 exists for clarity; both parties point to the same solid structure.

J. "a light block [at least partially] surrounding the at least one detector" ('911 Patent: Claims 1, 10, 19) [Term M-10]

Masimo's Proposal	Apple's Proposal
Plain and ordinary meaning	a structure that blocks light and accommodates the detector assembly

1. Masimo's Opening Position

The phrase "a light block [at least partially] surrounding the at least one detector" provides sufficient guidance for a jury to understand these limitations. *See* Masimo Ex. 13, ¶¶85-89. For that reason, Masimo proposes no construction. And the specification confirms that the inventors used the phrase "surrounding the at least one detector" according to its plain and ordinary meaning. *Id.*, ¶¶88-89. For example, the specification describes an embodiment where the detector "is

MASIMO 2038
Apple v. Masimo
IPR2024-00241

housed in an enclosure so as to reduce light piping from the emitter assembly to the detector assembly without passing through fingertip tissue." '911 Patent at 6:45-47. This enclosure "is colored black or other substantially light absorbing color." *Id.* at 6:45-47, 15:14-23. The enclosure also surrounds the at least one detector. *Id.*; *see id.* at FIGS. 32B, 46.

Apple's proposed construction replaces the verb "surrounding" with "accommodates" and replaces the phrase "at least one detector" with "the detector assembly." Masimo does not know the reasoning for Apple's proposal, or how that proposal would help the jury in any way.

Apple cites to a specification embodiment that discusses "a shoe box 3200 that accommodates the detector assembly." *Id.* at 15:14-23, FIGS. 32A-H. But that embodiment does not mean that the claimed "light block" cannot surround the detector. *Id.* Indeed, as explained above, the "shoe box 3200" is an example of a light block surrounding at least one detector. *Id.*

Further, Apple's proposal injects ambiguity into the claim language. Replacing "surrounding" with "accommodates" as Apple proposes would not clarify the claim language or help the jury. Also, Apple proposes inserting "the detector assembly," but the claims never recite a "detector assembly" at all. Apple's proposed construction needlessly risks confusing the jury between "at least one detector," which is claimed, and "the detector assembly," which is not. *See Ateliers de la Haute-Garonne v. Broetje Automation-USA Inc.*, No. 1:09-cv-00598, 2011 WL 722937, at *11 & n.4 (D. Del. 2011) (rejecting construction for "interject[ing] imprecision into the claim terms").

Moreover, Apple ignores that the specification does not equate a "detector" and a "detector assembly." To the contrary, the specification teaches that they are different structures because a detector assembly includes a detector ***and other structures***. For example, the specification teaches that the detector assembly can include an EMI shield, foil, and other structures around the detector.

MASIMO 2038
Apple v. Masimo
IPR2024-00241

’911 Patent at FIG. 24, 13:38-14:14. Thus, the Court should reject Apple’s proposed construction for committing “‘one of the cardinal sins of patent law—reading a limitation from the written description into the claims.’” *Phillips*, 415 F.3d at 1319-20 (internal citation omitted).

2. <u>Apple’s Answering Position</u>

The parties dispute whether “a light block [at least partially] surrounding the at least one detector” means “a structure that blocks light and accommodates the detector assembly” as Apple proposes or should remain undefined as Masimo alleges.

“Light block” is a coined term with no ordinary meaning in the art. Apple Ex. 33, ¶¶166-172; *see also, generally,* Apple Ex. 27 (no definition of “light block”); Apple Ex. 28 (same); Apple Ex. 29 (same). The claims make clear that “light block” relates to the assembly of detector(s). Each claim requiring a “light block” also required, earlier in the claim, “at least one detector.” Apple Ex. 17, Cls. 1, 10, 19, 21. Each “light block” limitation recites “***the*** at least one detector” using the definite article “the”:

> ***at least one detector*** configured to detect at least a portion of the light emitted from the at least three LEDs after at least a portion of the light has been attenuated by tissue …
>
> ***a light block surrounding <u>the</u> at least one detector***, the light block comprising a shoebox structure configured to recess ***<u>the</u> at least one detector*** into the shoebox structure, wherein the shoebox structure is at least partially formed of a black material, wherein a top of the shoebox structure includes only one opening through which light is configured to pass, the opening comprising an area smaller than a detection surface area of ***<u>the</u> at least one detector***; and ….

Id., Cl. 1; *see also id*., Cls. 10, 19, 21. Use of the definite article “the” demonstrates that “the at least one detector” has antecedent basis and refers back to the same “at least one detector” recited earlier in the claim. *See Salazar,* 64 F.4th at 1317. As such, regardless of the number of detectors that comprise “at least one detector” (an issue for which Apple’s claim construction is agnostic), the claimed “light block” necessarily refers back to that ***same*** assembly of detector(s).

MASIMO 2038
Apple v. Masimo
IPR2024-00241

The claims also make clear that "light block" is a structure that both blocks light and accommodates that detector assembly. Per the claims, the function of the "at least one detector" is to "detect at least a portion of the light emitted from the [] LEDs after at least a portion of the light has been attenuated by tissue." Apple Ex. 17, Cls. 1, 10, 19, 21. The claims further require that the "light block…at least partially surround[s] the at least one detector" and either "recess the at least one detector"; be "at least partially formed of black materials"; comprise "a base, four side walls and a top forming an enclosure"; and/or have "only one opening through which light is configured to pass." *Id*., Cls. 1, 10, 19, 21. In sum, the claims make clear that the "light block" is what accommodates the detector assembly and blocks stray light from reaching it.

The specification confirms that the "light block" accommodates the detector assembly. The specification itself never mentions "light block"; however, the claims make clear that a "shoebox" is part of the "light block" (*Id*., Cl. 1 ("the light block comprising a shoebox structure...")))—and even Masimo admits that "the 'shoe box' 3200 is an example of a light block surrounding at least one detector." *Supra* at 63. The specification's only disclosure of a structure that at least partially surrounds any detector are "shoe box 3200 that ***accommodates the detector assembly 2400***" and "the ***detector assembly 2400 inserts into*** a shoe 3200…." Apple Ex. 17, 15:14-15; 19:15-18, Figs. 32A-H. Indeed, the specification consistently refers to "detector assembly" rather than individual detectors, even has a section entitled "Detector Assembly," and ***never*** refers to a structure that accommodates anything less than the entire detector assembly comprising all of the detectors. *Id*., 4:32-33, 6:4-55, 9:2-10, 9:34-64, 12:4-58, 13:14-14:52, 15:4-16:9, 19:5-27, Figs. 3-4, 9, 10A-D, 19-21, 24-26, 29A-B, 31A-H, 32A-H, 34A-H, 40, 46. Figure 3, Figures 31B and 32B (annotated together to show the ***shoebox*** accommodated by the ***shoebox cavity 3120***) and Figure 46 (annotated to show ***shoebox 3200*** accommodating the entire ***detector***

MASIMO 2038
Apple v. Masimo
IPR2024-00241

assembly 2400) also make clear that the shoebox accommodates the detector assembly. *See Indacon, Inc. v. Facebook, Inc.*, 824 F.3d 1352, 1357 (Fed. Cir. 2016) (terms with no established meaning in art "ordinarily cannot be construed broader than the disclosure in the specification.").

Figs. 31B and 32B	***Fig. 46***
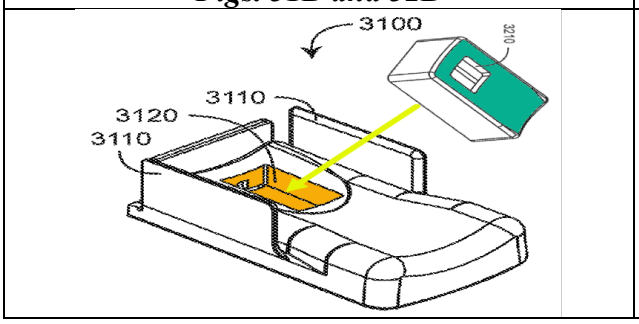	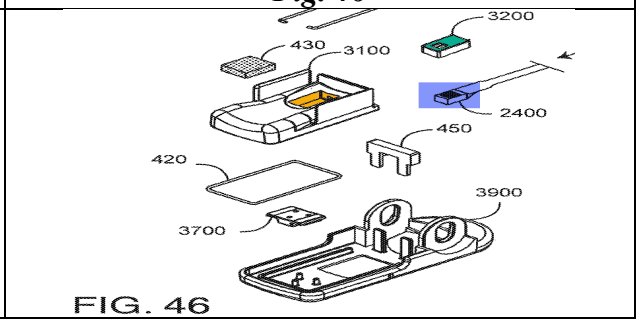

Masimo's allegation that "the specification describes an embodiment where ***the detector*** 'is housed in an enclosure so as to reduce light piping from the emitter assembly to the detector assembly without passing through fingertip tissue'" (*supra* at 63) misleadingly quotes the cited passage, which states "***[t]he detector assembly 2400*** is housed in an enclosure…." Apple Ex. 17, 6:45-47. Masimo also improperly suggests that Apple says "the claimed 'light block' cannot surround the detector" (*supra* at 62-63) when that is the opposite of Apple's position. Finally, Apple's construction uses "accommodates" because that is the precise language used in the specification (*see, e.g.*, Apple Ex. 17, 15:14-23) and the coined term "light block" can be construed no broader.

3. <u>Masimo's Reply Position</u>

As Masimo has explained, this phrase uses simple words according to their plain meaning and would be understood by a jury without construction. Apple argues that "light block" is a coined term to argue this phrase should be limited to a specification embodiment where the light block "accommodates the detector assembly." *Supra* at 64-66; '911 Patent at 15:14-15. But Apple's construction is wrong for at least three reasons.

First, "light block" is not a coined phrase. A phrase is "coined" if a POSA "would not be able to ascertain the meaning of [the phrase] based on the meaning of the constituent words." *HID Global Corp. v. Vector Flow, Inc.*, No. 1:21-cv-01769, 2023 WL 2655117, at *8 (D. Del. Mar. 27, 2023). Apple and its expert (Warren) never address that a POSA would be able to determine the meaning of "light block" from its constituent words. *Supra* at 64-66; Apple Ex. 33, ¶¶166-72. A POSA would understand that "a light block" as claimed is structure that blocks light based on its constituent words. Indeed, Apple's construction uses the words "blocks" and "light." Even Apple's experts (including Warren) opined in the parallel ITC Investigation that a POSA would understand "light block" because "light blocks" and "light blocking" structures were well known in the art. Masimo Ex. 46 ¶¶61-64, 100, 177; Masimo Ex. 47 ¶¶160-66, 215, 357, 396-402. Thus "light block" is not a coined phrase, rendering Apple's argument based on *Indacon* inapposite.

Second, Apple introduces another purpose to the straightforward purpose of blocking light by the "light block." Apple adds the purpose of "accommodat[ing] the detector assembly." Apple relies on one sentence where the specification says the "shoe box 3200 accommodates the detector assembly." But that one sentence cannot justify adding this "accommodating" purpose to the straightforward purpose of blocking light.

Third, in support of limiting "at least one detector" to "detector assembly," Apple contorts the claims. Apple refers to the possibility of multiple "detectors," *supra* at 65, but the claims do not recite multiple detectors. Rather, they recite "at least one," which Apple fails to address. *Id.* Apple also argues that the specification never discloses "anything less than the entire detector assembly comprising all of the detectors." *Supra* at 66. But that says nothing about the claims, all of which recite a light block (at least partially) surrounding "at least one detector" only. No

MASIMO 2038
Apple v. Masimo
IPR2024-00241

reading of "at least one detector" requires ***one light block*** to surround all of the detectors. Apple simply is rewriting the claims.

4. Apple's Sur-Reply Position

Masimo phrases its claims using "light block" even though the written description never used that term. Masimo fails to rebut the intrinsic evidence cited in Apple's answering brief demonstrating that the claimed "light block" accommodates the detector assembly, including: (1) the claims recite "a light block surrounding ***the*** at least one detector" using the definite article "the," which indicates an antecedent basis and reference back to all previously-recited detector(s); (2) the specification describes the only structure surrounding a detector as "accommodat[ing] the detector assembly"; and (3) the specification repeatedly refers to "the detector assembly" and discloses no structure that accommodates anything less than the entire detector assembly. *Supra* at 64-66. Apple relies on far more than "one sentence" of the patent. *Supra* at 65.

Contrary to Masimo's allegation, Apple's construction does not require multiple detectors. As Apple's answering brief explained, because the claims recite "a light block surrounding ***the*** at least one detector," the "light block" limitation refers back to all detectors comprising the previously-recited "at least one detector" regardless of the number of detectors. *Supra* at 65. Here, the claims require the "light block" to surround all of the recited detector(s); Masimo identifies no disclosure in the specification of any "light block" surrounding some but not all recited detectors, and failing to surround all of the detectors would defeat the very purposes of the "light block."

K. "a top of the [shoebox structure / light block]" ('911 Patent: Claims 1, 19) [Term M-11]

Masimo's Proposal	Apple's Proposal
Plain and ordinary meaning	the uppermost structure that covers the [shoebox structure / light block]

MASIMO 2038
Apple v. Masimo
IPR2024-00241

1. Masimo's Opening Position

The claim language recites that "a top" of the shoebox structure or light block is the feature that includes the "only one opening through which light is configured to pass" to the detector. The surrounding claim language provides sufficient context for the jury to understand the meaning of "top of the [shoebox structure / light block]," namely the area that has the opening for light to pass through. Masimo Ex. 13, ¶¶91-93.

Apple argues that "top" should mean "the uppermost structure that covers" the shoebox structure or light block. But the intrinsic evidence confirms "top" is not limited to the "uppermost structure," which would require a specific orientation of a device relative to the Earth. *Id.*, ¶92. Indeed, the specification includes an example (FIG. 32H, below) where the top of the shoebox structure or light block is not the "uppermost" structure. The top (green) is oriented downward on the page because the downward face has the only opening (cyan) through which light can pass.

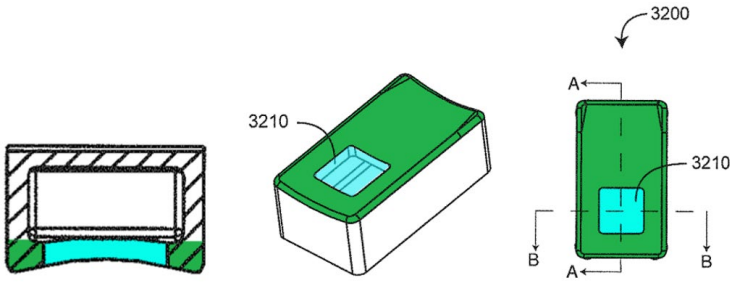

FIG. 32H **FIG. 32B** **FIG. 32C**

'911 Patent at FIG. 32H. The specification also includes an example (FIGS. 32B-C, above) where the "top" of the light block or "shoe box 3200" is oriented upward. *Id.* at FIGS. 32B-C, 46, 4:47-49, 6:45-47, 15:14-23. As shown above, regardless of orientation, the light block or shoebox structure has a top (green) with only one opening or window (cyan) through which light can pass to the detector. *Id.* at 15:15-17 ("detector window 3210 provides an optical path from a tissue site to the detector"). Thus, the claims and specification confirm that the "top" simply refers to the location of the opening. Masimo Ex. 13, ¶92.

MASIMO 2038
Apple v. Masimo
IPR2024-00241

Contrary to Apple's proposal, the claimed "top" is not necessarily the "uppermost structure" and does not require a specific orientation of the shoebox structure or light block relative to the Earth. Thus, Apple's proposal should be rejected because it ignores, and is inconsistent with, the intrinsic evidence. *IGT v. Bally Gaming Intern., Inc.*, 659 F.3d 1109, 1117 (Fed. Cir. 2011) (construing term "divorced from the surrounding limitations can lead construction astray"); *Johnson Worldwide*, 175 F.3d at 989-91 (improper to limit claim term when specification is consistent with broader definition).

Moreover, Apple's proposal confuses, rather than clarifies, the claims by needlessly replacing two words that a jury will easily understand ("a top") with five less-clear words ("the uppermost structure that covers"). By seeking to include "the uppermost structure," Apple risks confusing the jury by wrongly suggesting that device orientation is somehow relevant to the claims. Apple's proposal also risks confusing the jury because "the uppermost structure" lacks antecedent basis in the claims. Rejecting Apple's proposal avoids these unnecessary risks.

2. <u>Apple's Answering Position</u>

The parties agree that the claims require a shoebox structure or light block that has a "top." The parties dispute what the plain and ordinary meaning of "top" is, namely whether it means (1) "the uppermost structure that covers" as proposed by Apple or (2) "the area that has the opening for light to pass through" as Masimo now contends. *Supra* at 69-70.

The claims themselves make clear that "top of the [shoebox structure/light block]" is the part of the shoebox structure/light block having the uppermost positioning that covers or encloses the underlying structure. Claims 1 and 19 require "a top ***of the shoebox structure***" and "a top ***of the light block***," respectively. Apple Ex. 17, Cls. 1, 19. Claims 10 and 21 confirm the uppermost meaning of "top" by distinguishing it from "base" and "side walls" and making clear that the "top form[s] an enclosure." *See id.*, Cl. 10 ("the light block comprising a ***base***, four ***side walls*** and a

MASIMO 2038
Apple v. Masimo
IPR2024-00241

top forming an enclosure"), Cl. 21 ("the light block is formed of black materials and further comprises a ***base***, ***side walls***, and a ***top forming an enclosure***").

The specification confirms that "top of the [shoebox structure/light block]" has an uppermost, positional meaning. Using "top," "bottom," and "side" to distinguish views of shoebox parts by relative position, the specification describes Figs. 32A-H respectively as showing "[A] perspective bottom, [B] perspective top, [C] top, [D] back, [E] bottom, 2F] side cross sectional, [G] side, and [H] front cross sectional views of a shoe box." *Id.*, 4:47-49. Consistent with the meaning of "top," both the "perspective top" and "top" views show the shoe box from ***above***.

Figure 32B: "perspective top" view	***Figure 32C: "top" view***
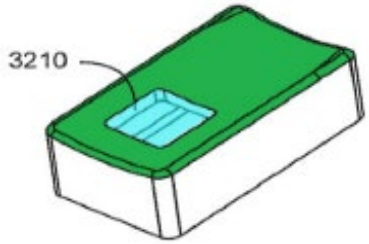	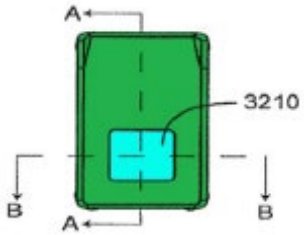

The remaining figures likewise distinguish "top," "side," and "bottom" views—always showing "top" from above. *Id.*, 4:15-65, Figs. 13-16, 22, 30A-H, 31A-H, 33A-H, 34A-H, 36A-C, 37A-D, 39A-D. Other disclosures confirm the uppermost, positional meaning of "top." *Id.*, 13:11-13 ("The flex circuit 2200 has ***top coverlay***, top ink, inner coverlay, trace, trace base, bottom ink and bottom coverlay layers."), 14:5-6 ("The Si detector is ***placed on top of*** the GaAs detector…").

Further, during prosecution, the examiner and patentee understood "top" as the uppermost structure that covers the shoebox/light block. The original claims required "the shoebox structure further comprising a window on a top portion of the shoebox structure." Apple Ex. 19, 11/9/20 Office Action at 2. In rejecting the claims, the examiner found that the Schulz prior art figure at right (Apple Ex. 20, Fig. 5) disclosed that limitation—***and the examiner expressly labeled the uppermost structure that covers the shoebox as the "top."*** *Id.*; Apple Ex. 19, 11/9/20 Office

MASIMO 2038
Apple v. Masimo
IPR2024-00241

Action at 3. Confirming that the opening must be on "top of the shoebox structure" as opposed to merely anywhere on the shoebox, the "Examiner indicated, during an interview just prior to the amendments that overcame the rejection, that ***the differentiating aspect of top of the shoe box having only one opening is not claimed***." Apple Ex. 19, 2/17/21 Interview Summary. The applicant subsequently amended to add that feature. *Id*., 2/9/21 Claim Amendments.

Schulz Prior Art Fig. 5—Examiner Annotation

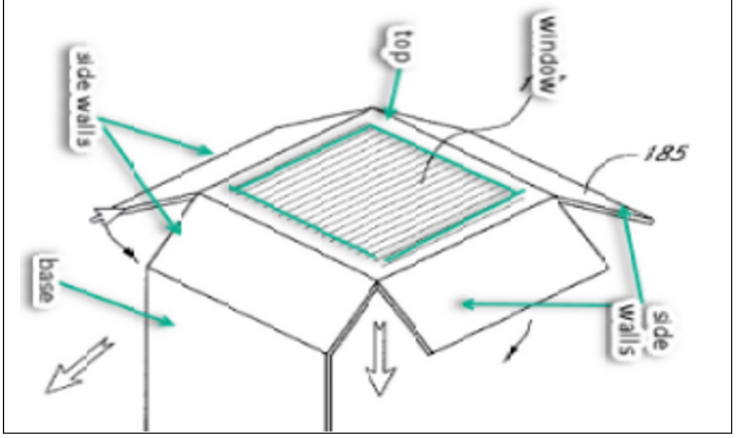

Dictionary definitions confirm that Apple sets forth the ordinary meaning of "top."

- "top … 1. The uppermost part, point, surface, or end … 5. Something, such as a lid, that covers or forms an uppermost part." (Apple Ex. 24.)
- "top … 1 the highest or uppermost part of anything … 4 a thing that forms or covers the uppermost part of anything, esp. a lid or cap." (Apple Ex. 30.)

Masimo's proposal that the plain meaning of "top" is any "area that has the opening for light to pass through" (*supra* at 69)—which Masimo first disclosed in its opening brief—is improper, unsupported, and nonsensical. *First*, Masimo improperly reads "top" out of the claims by failing to accord meaning to that term. Masimo instead conflates and replaces "top" with the later-recited, ***additional*** claim requirement that the "top" ***also*** "includes only one opening through which light is configured to pass." Apple Ex. 17, Cl. 1; *see also id.*, Cl. 19. In construing "top" as any "area that has the opening for light to pass through" ***regardless of its position or location***, Masimo improperly treats "top" as a nullity and reads it out of the claims. *See Becton, Dickinson & Co.*, 616 F.3d at 1257 (refusing to read limitation out of claims).

Second, Masimo's fatally overbroad construction of "top" has no support in the claims, specification, prosecution history, or any dictionary. The only intrinsic evidence Masimo cites—Figs. 32A-H & 46, 4:47-49, 6:45-47, and 15:14-23—either supports Apple's proposal or is inapposite. *Supra* at 69-70. As discussed above, the "top" views of Figs. 32B-C (and the lateral view of Fig. 32D) are upright and, unsurprisingly, depict what Masimo alleges is the opening in the uppermost structure that covers the shoebox, consistent with Apple's construction of "top." Apple Ex. 17, Figs. 32B-C. And consistent with Apple's construction, Figs. 32A and 32E show upside-down "bottom" views of the shoebox with no opening in the displayed "bottom." *Id.*, Figs. 32A, 32E. Fig. 32H likewise is an upside-down view that, if viewed upright, would show what Masimo alleges is the opening in the uppermost structure that covers the shoebox. *Id.*, Fig. 32H. Masimo's remaining citations do not purport to address, let alone support, Masimo's proposal.

Third, Masimo's proposal that "top" means "the area that has the opening for light to pass through" makes no sense. What if multiple areas of the shoebox structure have an "opening"—which one would be the "top"? Also, Masimo's construction of "top" is duplicative of its construction of "opening" ("the area of the light block through which light is configured to pass"), but how can a "top" be the same as an "opening?" And confirming their fatally flawed nature, Masimo's constructions yield absurd, unintelligible results when plugged into the claim language:

Claim language	***Plugging in Masimo's "top" and "opening" constructions***	***Masimo's construction of "top" in turn also recites "opening"***
"a ***top of the shoebox structure*** includes only one ***opening*** through which light is configured to pass"	"***the area that has the OPENING for light to pass through*** includes only one ***the area of the light block through which light is configured to pass*** through which light is configured to pass"	***the area that has the the area of the light block through which light is configured to pass for light to pass through*** includes only one ***the area of the light block through which light is configured to pass*** through which light is configured to pass"

MASIMO 2038
Apple v. Masimo
IPR2024-00241

3. Masimo's Reply Position

Masimo has explained "a top" is the area of the "shoebox structure" or "light block" that includes the "only one opening" through which light can pass to the detector. The claimed "top" identifies the area with the "opening" to distinguish it from other claimed features. Yet Apple proposes that "a top" means "the uppermost structure that covers" the shoebox structure or light block based on a specific orientation of a device relative to the Earth. *Supra* at 70-74. Apple's construction is wrong for at least three reasons.

First, nothing in the intrinsic evidence supports Apple's construction. The claims do not support the construction as Apple argues. *Id.* Simply because the claims use "top" to distinguish "base" and "sidewall" in no way suggests that the claims require a particular orientation of the device with the light block relative to the Earth. The claimed devices are small and easily moved around in use, unlike a building, where the building's top would always be furthest from the ground. Unsurprisingly, the specification shows the light block in different orientations, including an example (FIG. 32H) where the top of the light block (green) is shown on the bottom. '911 Patent at FIGS. 32B-C, 32H, 4:47-49.

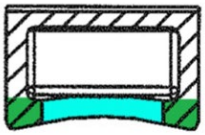

FIG. 32H

Apple next turns to the specification and argues that "a top of the [shoebox structure/light block]" has "an uppermost, positional meaning" because FIGS. 32B-C (and other) "top" view figures show the shoe box (and other structure) "from above." *Supra* at 71. But Apple's argument fails for the same reasons discussed above. Merely showing structure from above in "top" views does not limit "a top" in the claims to "the uppermost structure" relative to the Earth.

The file history also does not support Apple's construction. Apple argues that during prosecution, "the examiner and patentee understood 'top' as the uppermost structure that covers the shoebox/light block." *Supra* at 72. But the file history shows no understanding that the device had to be oriented such that the "top" was always furthest from the Earth. Rather, the file history

MASIMO 2038
Apple v. Masimo
IPR2024-00241

simply uses "top" in the same way discussed above—to distinguish features from one another regardless of the device's orientation.

Second, Apple relies on dictionary definitions of "top." *Supra* at 72 (citing Apple Exs. 24, 30). But Apple's use of the word "uppermost" is just a way for Apple to argue that the device must always be oriented in one position.

Third, Masimo explained that Apple's construction needlessly replaces two words with five less clear words. *Supra* at 70. Apple has no response. *Supra* at 70-74.

Apple poses the question "[w]hat if multiple areas . . . have an 'opening'–which one would be the 'top'?" *Supra* at 73. But the claims do not allow for that hypothetical because they recite "***only*** one opening through which light is configured to pass." Apple's hypothetical is irrelevant.

Apple also argues that Masimo's constructions of "top" and "opening" are duplicative. *Id.* Apple questions "how can a 'top' be the same as an 'opening?'" *Id.* But Masimo's constructions explain that the "top" is the structure that has the "opening" (i.e., A has B), while the "opening" is the "area through which light is configured to pass" to the detector (i.e., B does C). Thus, Masimo's constructions are not duplicative.

Further, Apple includes a chart where it first substitutes constructions for "top" and "opening." *Id.* Apple then inserts Masimo's construction of "opening" into Masimo's construction of "top." *Id.* But that makes no sense here, where Masimo proposes that no construction is necessary for either term and the jury would understand their meaning. Apple's exercise shows simply that the two terms are related to one another.

4. <u>Apple's Sur-Reply Position</u>

Masimo fails to address, let alone rebut, at least the following points in Apple's answering brief that support Apple's construction: (1) the claims distinguish the "top" portion of the structure from its "base" and "side walls" and recite that the "top form[s] an enclosure"; (2) the specification

MASIMO 2038
Apple v. Masimo
IPR2024-00241

distinguishes "top," "bottom," and "side" views based on the position of the element relative to itself and uses the positional phrases "top coverlay" and "placed on top of"; (3) the file history shows that the examiner labeled the uppermost structure that covers the shoebox as the "top"; and (4) dictionary definitions confirm that "top" means "uppermost" and "covers." *Supra* at 70-74.

Masimo attacks a straw man—Apple's construction is ***not*** "based on a specific orientation of a device relative to the Earth." *Supra* at 74. Rather, Apple's construction is based on the structure of the element itself (and relative only to itself), as recited and described in the intrinsic record and objective dictionary definitions. The word "Earth" appears nowhere in Apple's brief.

While Apple's construction has ample support, Masimo notably provides no support for its construction of "top" as any "area that has the opening for light to pass through"—which is not the plain meaning of "top." Masimo also fails to respond to the criticisms that its construction reads "top" out of the claims by conflating it with the separate claim requirement of an "opening." *Supra* at 72. All claims require that the claimed element have a "top." Apple Ex. 17, Cls. 1-29. Some claims additionally require that the "top" ***also*** "include[] only one opening." *E.g.*, Apple Ex. 17, Cls. 1, 19. If the "opening" can be anywhere as Masimo alleges, then "top" has no meaning.

Masimo also dodges the absurdities of its construction. *Supra* at 73. Masimo fails to identify what the "top" of a structure having multiple openings is, like in the image at right. Masimo attempts to dodge the question as a "hypothetical," but since multiple openings in the "top" fall outside of the claims, it is necessary to know which portion is the "top." Masimo also fails to show how its constructions of "opening" as "the area of the light block through which light is configured to pass" and "top" as "the area that has the opening…" are not duplicative; "top" is then "the area

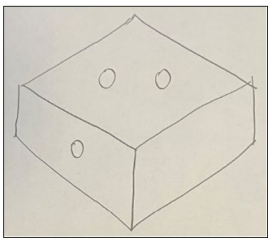

that has the area…" And Masimo fails to explain how its constructions of "top" and "opening" make sense when plugged into the claims. *Id.*

L. "opening" ('911 Patent: Claims 1, 19, 20) [Term M-12]

Masimo's Proposal	Apple's Proposal
Plain and ordinary meaning	empty space

1. Masimo's Opening Position

Claims 1 and 19 recite "at least one detector" for detecting light and a "light block" with "one opening ***through which light is configured to pass***" to the detector. Masimo proposes no construction because the surrounding claim language makes clear what is being referred to. The surrounding claim language confirms that "opening" in the claims is the area of the light block "through which light is configured to pass." Masimo Ex. 13, ¶¶95-99. And because light can pass through empty space or transparent material, "opening" in the claims encompasses both empty space or transparent material. *Id.* A jury will readily understand "opening" without construction, especially since the surrounding language provides this context. *See Pause Tech. LLC v. TiVo Inc.*, 419 F.3d 1326, 1331 (Fed. Cir. 2005).

The patent describes an exemplary embodiment of the claimed opening. The specification explains that an exemplary opening ("window 3210," shown in cyan at right) "provides an ***optical path*** from a tissue site to the detector." '911 Patent at 15:14-17, FIG. 32B (right), FIGS. 32A-H. This embodiment is consistent with the claim language, which simply recites that the "opening" is the area of the light block "through which light is configured to pass." Masimo Ex. 13, ¶97.

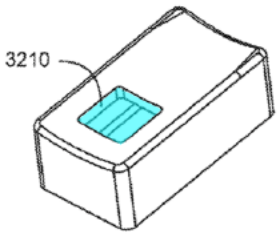

Apple's proposed construction seeks to artificially limit the plain language of the claims to one specific example of an opening—"empty space." Apple relies on an exemplary embodiment of an opening (e.g., "window 3210") with empty space (an absence of material) in the opening.

MASIMO 2038
Apple v. Masimo
IPR2024-00241

JCCC, Ex. A at 10 (citing '911 Patent at in FIGS. 32A-H). But the '911 Patent does not define an "opening" as "empty space." *See generally* '911 Patent. Nor does the patent disavow an opening with a transparent material that allows light to pass. *See generally id.* Thus, limiting the claims to one specific type or embodiment of "opening" is improper. *Phillips,* 415 F.3d at 1323.

Apple also ignores that the surrounding claim language clarifies that the "opening" is for ***light*** by reciting an "opening through which ***light*** is configured to pass." There can be no credible dispute that light can pass through both transparent material (e.g., glass windows) and empty space. Yet, Apple's construction erroneously reads out transparent material. *See Johnson Worldwide*, 175 F.3d at 989-91 (improper to limit claim term when specification is consistent with broader definition). The Court should also reject Apple's proposal as it seeks to define "opening" divorced from the claim language that supplies necessary context. *See Pause Tech*, 419 F.3d at 1331.

Significant extrinsic evidence is consistent with the above-described intrinsic evidence. For example, a Masimo patent on related technology teaches that "[t]he ***openings can be made from glass*** to allow attenuated light from a measurement site, such as a finger, to pass through to one or more detectors." Masimo Ex. 7 at 8:26-29; *id.* at FIG. 7B, 27:22-26 ("[G]lass 730*b* can be used for some or all of the openings 703*b*."), 19:38-53 (describing "openings or windows" that "can be made from materials, such as plastic or glass."). Indeed, Masimo's expert Dr. Madisetti explained in the ITC Investigation that FIG. 7B in that Masimo patent "confirms, again, that the 'opening' . . . can be made of glass or other such material that allows light to pass through . . . ." Masimo Ex. 1 at 703:6-10.

Further, Apple's own patents confirm that an "opening" for light is not limited to "empty space." One Apple patent states that "[t]he back surface (i.e., underside of the device) may comprise an opening or a window in the housing that is aligned with the illumination field and/or

MASIMO 2038
Apple v. Masimo
IPR2024-00241

field-of-view of the light emitter(s) and/or light sensor(s) and an ***optically transparent cover structure disposed over or within the opening***." Masimo Ex. 8 at 30:19-24; *see id.* at 31:4-38. An Apple patent publication describes that "the reflective sensing device may further include a set of ***windows which may be disposed in the set of openings*** of the back cover. . . . ***[and] may be optically transparent*** windows." Masimo Ex. 9, ¶15; *see also id.*, ¶¶9-10, 16, 65, 77, 102, 104, 108-109, 118, FIGS. 1B, 5, 6B. Additional Apple patents use the term "opening" to include a transparent material (e.g., an optically transparent window). *See, e.g.*, Masimo Ex. 10, ¶37, FIG. 4B; Masimo Ex. 11 at 7:30-35; Masimo Ex. 12 at 5:29-36.

This evidence confirms that an "opening" through which light may pass includes transparent material (e.g., a window). Only if physical objects had to pass through an opening would it need to be an empty space. But here the patents are referring to the passage of light only. Thus, Apple's attempt to limit the claimed "opening" to "empty space" does not reflect the context of the invention and should be rejected.

2. <u>Apple's Answering Position</u>

The parties dispute whether "opening" means "empty space" as Apple proposed or "the area of the light block through which light is configured to pass" as Masimo insists. *Supra* at 77-79.

The claims make clear that the light cannot pass through merely anything but rather must pass through an "opening." Apple Ex. 17, Cls. 1, 19, 20. Consistent with the intrinsic evidence and dictionary definitions, the ordinary meaning of "opening" is an "empty space" or other synonymous term such as "gap," "hole," or "void." *See, e.g.*, Apple Ex. 24 (defining "opening" as "2 An open space serving as a passage or gap"); Apple Ex. 30 (defining "opening" as "2 a vacant or unobstructed space, esp. one that will serve as a passageway; gap"); Apple Ex. 31 (defining "opening" as "1 an open place; hole; gap").

MASIMO 2038
Apple v. Masimo
IPR2024-00241

Masimo's proposal that the plain meaning of "opening" is any "area of the light block 'through which light is configured to pass'" is unsupported and improper. *Supra* at 77. Masimo identifies no support from the claims, specification, prosecution history, or any dictionary for its fatally overbroad construction—and none exists. Moreover, Masimo conflates and replaces the claim requirement of an "opening" with the later-recited, ***additional*** claim requirement that the "opening" ***also*** is one "through which light is configured to pass." In construing "opening" as any "area of the light block through which light is configured to pass" ***regardless of what it passes through***, Masimo fails to accord meaning to the term "opening," treats it as a nullity, and improperly reads it out of the claims. *See Becton, Dickinson & Co.*, 616 F.3d at 1257 (refusing to read limitation out of claims).

Doubling down on its flawed construction that an "opening" is anything through which light is configured to pass, Masimo alleges that "opening in the claims encompasses both empty space ***or transparent material***." *Supra* at 77. Masimo even suggests that an "opening" includes ***airtight closed*** windows. *Id*. (Masimo alleging that "[t]here can be no credible dispute that light can pass through both transparent material (e.g., glass windows) and empty space."). Masimo's absolutist position that an "opening" includes closed "windows" is unsupported and unsupportable. Masimo disregards the self-evident reality that a window can be open (*i.e.*, "open the window, it's getting hot in here") or a window can be closed (*i.e.*, "close the window, it's getting too chilly outside"). A window can be used to close an opening, but a closed window is not the same as an opening. Masimo's overbroad construction improperly seeks to treat a closed window as if it were open.

The intrinsic evidence also undermines Masimo's absolutist position that a "window" is necessarily an "opening." Some claims recite "opening" (Apple Ex. 17, Cls. 1, 8-9, 19-20, 28-29)

MASIMO 2038
Apple v. Masimo
IPR2024-00241

whereas other claims recite "window." Apple Ex. 17, Cls. 10, 17-18. In addition, the specification does not contain the word "opening" and never suggests that a "window" is necessarily an "opening." Furthermore, the prosecution history confirms that a "window" is not necessarily an "opening." Indeed, in response to a prior art rejection, the patentee amended the claim language to change the claim term ***from*** "window" ***to*** "opening":

> top of the shoebox structure includes only one opening through which light is configured to pass~~further comprising a window on a top portion of the shoebox structure~~, the opening ~~window~~ comprising an area smaller than a detection surface area of the at least one detector; and

> 28. (**Currently Amended**) The device of Claim 21, wherein the ~~window~~ opening provides an optical path from the tissue to the at least one detector.
>
> 29. (**Currently Amended**) The device of Claim 21, wherein the opening ~~window~~ provides an optical path from the at least three LEDs to the tissue.

Apple Ex. 19, 2/9/21 Response to Office Action at 2-5 (exemplary amendments changing "window" to "opening").

Finally, Masimo improperly tries to use extrinsic evidence to alter intrinsic evidence. The specification of the unrelated Masimo patent, unlike here, makes clear that those embodiments "can include openings ***or*** windows"—which confirms they are different concepts. Masimo Ex. 7 at 19:38-40. And the unrelated Apple references likewise merely taught embodiments that "may comprise an opening ***or*** a window," or the unremarkable proposition that a window or other material could be used to close an opening. Masimo Ex. 8 at 30:19-24; Masimo Ex. 9 ¶15; Masimo Ex. 10 ¶37.

3. Masimo's Reply Position

The "opening" is "the area of the light block through which light is configured to pass" to the detector, as Masimo has explained. Light passes through both empty space and transparent

material, and thus, both are examples of the claimed opening. Apple argues that the "opening" must be "empty space" only. But Apple ignores what the opening is for—passing ***light***.

Apple begins by looking to extrinsic evidence first. *Supra* at 80. Specifically, Apple relies on three dictionary definitions that define opening as an empty space, gap, hole, or void. *Id.* (citing Apple Exs. 24, 30-31). But each of these definitions refer to the more general situation where an opening allows physical objects, such as water or people, to pass. Examples of such general openings would be the hole in a can or a door to a house. None of Apple's general definitions address the situation where the opening is for light. Claims 1 and 19 recite "one opening through which light is configured to pass." And contrary to Apple's construction, light can pass through more than "empty space." Apple's general definitions ignore the purpose of the claimed opening and "may not be used to vary or contradict the claim language." *Vitronics*, 90 F.3d at 1584.

Second, Apple argues that Masimo has "no support" for its construction and that "none exists." *Supra* at 80-81. But Masimo set forth how the claim language, specification, and extrinsic evidence support its construction that an opening can be either empty space or transparent material. *Supra* at 77-79 (citing '911 Patent at Claim 1, 15:14-17, FIGS. 32A-H; Masimo Ex. 1 at 703:6-10; Masimo Ex. 7 at 8:26-29, 27:22-26, 19:38-53, FIG. 7B; Masimo Ex. 9, ¶¶9-10, 15, 16, 65, 77, 102, 104, 108-109, 118, FIGS. 1B, 5, 6B; Masimo Ex. 10, ¶37, FIG. 4B; Masimo Ex. 11 at 7:30-35; Masimo Ex. 12 at 5:29-36). Apple did not respond to Masimo's evidence.

Apple also argues that Masimo "replaces the claim requirement of an 'opening' with the later-recited, ***additional*** claim requirement that the 'opening' ***also*** is one 'through which light is configured to pass.'" *Supra* at 80 (emphases in original). But the claims recite "opening" in a single phrase: "one opening through which light is configured to pass." Apple ignores that Masimo

MASIMO 2038
Apple v. Masimo
IPR2024-00241

proposed no construction precisely because this surrounding claim language confirms the meaning of the entire phrase.

Apple further argues that Masimo "fails to accord meaning to the term 'opening'" and "reads it out of the claims" because Masimo's construction does not specify "what [light] passes through." *Id.* Masimo does no such thing. Masimo has explained that light can pass through empty space or transparent material and thus "'opening' in the claims encompasses both empty space or transparent material." *See, e.g.*, *Supra* at 77-78.

Third, Apple relies on an "airtight closed windows" analogy. *Supra* at 80-81. But Apple focuses on the wrong concept—air—instead of light. *Id.* Specifically, Apple argues that because "airtight closed windows" do not allow the passage of ***air***, "a closed window is not the same as an opening." *Id.* But the claims specify that the "opening" is for "***light***" to pass. The passage of air through the "opening" is irrelevant. Apple repeats its flawed analysis in arguing that a window is "not necessarily an 'opening.'" *Supra* at 81. And that argument fails for the same reasons.

4. <u>Apple's Sur-Reply Position</u>

Masimo faults Apple for citing dictionary definitions in support of its construction of "opening," and quibbles with Apple's dictionary definitions (*supra* at 82); however, Masimo cites nothing that supports its construction of "opening" as "the area of the light block through which light is configured to pass" and relies solely on unsupported attorney allegations. Certainly, none of Masimo's purported citations say that an "opening" is ***anything*** through which light may pass.

Masimo also fails to rebut the criticism that its construction reads the term "opening" out of the claims by conflating it with the ***additional*** requirement "through which light is configured to pass." *Supra* at 77. Masimo repeats the phrase "one opening through which light is configured to pass" (*supra* at 82-83) without analysis, failing to recognize that the phrase has two requirements: (1) an "opening" and (2) "through which light is configured to pass." If an

MASIMO 2038
Apple v. Masimo
IPR2024-00241

"opening" includes anything "through which light is configured to pass," then the claim term "opening" is superfluous.

Masimo further fails to address, let alone rebut, the intrinsic evidence contradicting its position that a "window" is necessarily an "opening." Masimo fails to respond to Apple's arguments that some claims recite "opening" whereas other claims recite "window" (*supra* at 80) or that, during prosecution, the patentee amended the language of some claims from "window" to "opening." *Supra* at 80-82. And Masimo misapprehends Apple's windows analogy, which merely intended to state the obvious—a window can be open (framing empty space, *i.e.*, an opening) or closed. A closed "window" is not an "opening." As such, not all "windows" are "openings."

V. CONCLUSION

Masimo

For the reasons explained above, the Court should reject Apple's proposed constructions as contrary to law and unhelpful to the jury.

Apple

For the foregoing reasons, the Court should resolve the parties' disputes over the meaning of these claims by adopting Apple's constructions and rejecting Masimo's interpretations.

MASIMO 2038
Apple v. Masimo
IPR2024-00241

Respectfully submitted,

POTTER ANDERSON & CORROON LLP

By: /s/ David E. Moore

David E. Moore (#3983)
Bindu A. Palapura (#5370)
POTTER ANDERSON & CORROON LLP
Hercules Plaza, 6th Floor
1313 N. Market Street
Wilmington, DE 19801
Tel: (302) 984-6000
dmoore@potteranderson.com
bpalapura@potteranderson.com

John M. Desmarais
Cosmin Maier
Jordan N. Malz
Kerri-Ann Limbeek
DESMARAIS LLP
230 Park Avenue
New York, NY 10169
Tel: (212) 351-3400

Peter C. Magic
DESMARAIS LLP
101 California Street
San Francisco, CA 94111
Tel: (415) 573-1900

Jennifer Milici
Leon B. Greenfield
Dominic Vote
WILMER CUTLER PICKERING HALE AND DORR LLP
2100 Pennsylvania Avenue NW
Washington, DC 20037
202-663-6000 (t)
jennifer.milici@wilmerhale.com

Respectfully submitted,

PHILLIPS MCLAUGHLIN & HALL, P.A.

By: /s/ Megan C. Haney

John C. Phillips, Jr. (No. 110)
Megan C. Haney (No. 5016)
1200 North Broom Street
Wilmington, DE 19806
(302) 655-4200 Telephone
(302) 655-4210 Fax
jcp@pmhdelaw.com
mch@pmhdelaw.com

Joseph R. Re
Stephen C. Jensen
Stephen W. Larson
Benjamin A. Katzenellenbogen
Jared C. Bunker
Kendall M. Loebbaka
Douglas B. Wentzel
KNOBBE, MARTENS, OLSON & BEAR, LLP
2040 Main Street, 14th Floor
Irvine, CA 92614
(949) 760-0404 Telephone
(949) 760-9502 Facsimile
joe.re@knobbe.com
steve.jensen@knobbe.com
stephen.larson@knobbe.com
ben.katzenellenbogen@knobbe.com
jared.bunker@knobbe.com
kendall.loebbaka@knobbe.com
douglas.wentzel@knobbe.com

Brian Horne
KNOBBE, MARTENS, OLSON & BEAR, LLP
1925 Century Park East, Suite 600
Los Angeles, CA 90067
(310) 551-3450 Telephone
(310) 551-3458 Facsimile
brian.horne@knobbe.com

MASIMO 2038
Apple v. Masimo
IPR2024-00241

leon.greenfiled@wilmerhale.com
dominic.vote@wilmerhale.com

Mark A. Ford
WILMER CUTLER PICKERING HALE AND DORR LLP
60 State Street
Boston, MA 02109
617-526-6000 (t)
mark.ford@wilmerhale.com

Counsel for Plaintiff and Counter-Defendant Apple Inc.

Adam Powell
KNOBBE, MARTENS, OLSON & BEAR, LLP
3579 Valley Centre Drive, Suite 300
San Diego, CA 92130
(858) 707-4000 Telephone
(858) 707-4001 Facsimile
adam.powell@knobbe.com

Counsel for Defendants Masimo Corporation and Sound United, LLC and Counterclaimants Masimo Corporation and Cercacor Laboratories, Inc.

MASIMO 2038
Apple v. Masimo
IPR2024-00241

CERTIFICATE OF SERVICE

I hereby certify that on August 31, 2023, a true and correct copy of the foregoing document was served on the following counsel of record at the addresses and in the manner indicated:

VIA ELECTRONIC MAIL:

David E. Moore Bindu A. Palapura Andrew L. Brown Hercules Plaza, 6th Floor 1313 N. Market Street Wilmington, DE 19801 dmoore@potteranderson.com bpalapura@potteranderson.com abrown@potteranderson.com	John M. Desmarais Kerri-Ann Limbeek Cosmin Maier Jordan N. Malz Benjamin N. Luehrs Joze Welsh Jamie L. Kringstein Jennifer M. Przybylski Carson Olsheski Jeffrey Scott Seddon, II Amy I. Wann Raymond N. Habbaz Lee Matalon Taeg Sang Cho Eli Balsam Patrick Reilly Marie Weisfeiler DESMARAIS LLP 230 Park Avenue New York, NY 10169 jdesmarais@desmaraisllp.com klimbeek@desmaraisllp.com cmaier@desmaraisllp.com jmalz@desmaraisllp.com bluehrs@desmaraisllp.com jwelsh@desmaraisllp.com jkringstein@desmaraisllp.com jprzybylski@desmaraisllp.com colsheski@desmaraisllp.com jseddon@desmaraisllp.com awann@desmaraisllp.com rhabbaz@desmaraisllp.com lmatalon@desmaraisllp.com tcho@desmaraisllp.com ebalsam@desmaraisllp.com preilly@desmaraisllp.com mweisfeiler@desmaraisllp.com

MASIMO 2038
Apple v. Masimo
IPR2024-00241

Peter C. Magic Kyle Curry Maria Tartakovsky DESMARAIS LLP 101 California Street San Francisco, CA 94111 pmagic@desmaraisllp.com kcurry@desmaraisllp.com mtartakovsky@desmaraisllp.com	Jennifer Milici Dominic Vote Leon B. Greenfield Wilmer Cutler Pickering Hale and Dorr LLP 1875 Pennsylvania Avenue, NW Washington DC 20006 jennifer.milici@wilmerhale.com dominic.vote@wilmerhale.com leon.greenfield@wilmerhale.com
Mark A. Ford Wilmer Cutler Pickering Hale and Dorr LLP 60 State Street Boston, MA 02109 mark.ford@wilmerhale.com	David J. Cho Desmarais LLP 1899 Pennsylvania Avenue NW, Suite 400 Washington, DC 20006 dcho@desmaraisllp.com
Lydia Turnage Wilmer Cutler Pickering Hale and Dorr LLP 7 World Trade Center 250 Greenwich Street New York, NY 10007 lydia.turnage@wilmerhale.com	Bethany Stevens Hannah Cannom Walker Stevens Cannom LLP 500 Molino Street, Suite 118 Los Angeles, CA 90013 bstevens@wscllp.com hcannom@wscllp.com
AppleMasimoService@desmaraisllp.com	whmasimoantitrustservice@wilmerhale.com
IPservice@potteranderson.com	

August 31, 2023

/s/ Megan C. Haney
Megan C. Haney (#5016)

MASIMO 2038
Apple v. Masimo
IPR2024-00241