[redacted]

UNITED STATES INTERNATIONAL TRADE COMMISSION
WASHINGTON, D.C.

Before the Honorable Monica Bhattacharyya
Administrative Law Judge

In the Matter of **CERTAIN LIGHT-BASED PHYSIOLOGICAL MEASUREMENT DEVICES AND COMPONENTS THEREOF**	Inv. No. 337-TA-1276

COMPLAINANTS' INITIAL POST-HEARING BRIEF

TABLE OF CONTENTS

Page No.

I. INTRODUCTION 1

A. Procedural History 7

B. The Parties 8

1. Masimo & Cercacor 8

a. Masimo Revolutionized Non-Invasive Monitoring 8

b. Masimo Consumer Products 9

c. Masimo's Non-Invasive Monitoring Includes Wrist-Worn Devices 11

2. Apple 13

C. Overview of the Technology 16

D. The Asserted Patents 17

1. U.S. Patent Nos. 10,912,501, 10,912,502, and 10,945,648 18

2. U.S. Patent No. 10,687,745 20

3. U.S. Patent No. 7,761,127 22

E. The Products at Issue 26

1. Masimo's Domestic Industry Products 26

a. Masimo Watch 27

i. Masimo and Cercacor's Wrist Pulse Oximetry Development 27

ii. Masimo's Patent Practicing Articles 30

(a) [redacted] CPX-0021C ([redacted] 30

(b) [redacted] CPX-0029C [redacted] 31

(c) [redacted] CPX-0052C [redacted] 32

MASIMO 2042
Apple v. Masimo
IPR2024-00241

TABLE OF CONTENTS
(*cont'd*)

Page No.

(d) [redacted] CPX-0058C ([redacted] 33

(e) [redacted] CPX-0019C, CPX-0020C, CPX-0065C [redacted] 34

(f) Masimo W1 ([redacted] 35

b. rainbow® Sensors 36

2. Accused Products 37

a. Apple Watch Series 6 and 7 37

b. Future Apple Watch Products 39

II. JURISDICTION 39

A. Standing 39

B. Subject Matter Jurisdiction 40

C. Personal Jurisdiction 40

D. *In rem* Jurisdiction and Importation 40

III. '501, '502, AND '648 PATENTS 41

A. Level of Ordinary Skill in the Art 41

B. Claim Construction 42

1. "Arranged Over"/"Positioned Over"/"Above" 42

2. "Openings"/"Through Holes" 49

C. Infringement 53

1. Legal Standard 53

2. Apple Infringes '501 Patent Claim 12 54

a. Disputed Elements 54

MASIMO 2042
Apple v. Masimo
IPR2024-00241

TABLE OF CONTENTS
(*cont'd*)

Page No.

i. Element [1C] 54

ii. Element [1D] 57

b. Undisputed Elements 59

i. Element [1PRE] 59

ii. Element [1A] 60

iii. Element [1B] 61

iv. Element [1E] 62

v. Element [1F] 64

vi. Element [12] 65

3. Apple Infringes '502 Patent Claim 22 66

a. Disputed Elements 66

i. Element [19C] 66

b. Undisputed Elements 67

i. Element [19PRE] 67

ii. Element [19A] 68

iii. Element [19B] 68

iv. Element [19D] 68

v. Element [19E] 68

vi. Element [20] 68

vii. Element [21] 69

viii. Element [22] 70

MASIMO 2042
Apple v. Masimo
IPR2024-00241

TABLE OF CONTENTS
(*cont'd*)

Page No.

4. Apple Infringes '502 Patent Claim 28 71

a. Disputed Elements 71

i. Element [28E] 71

ii. Element [28F] 71

b. Undisputed Elements 72

i. Element [28PRE] 72

ii. Element [28A] 72

iii. Element [28B] 72

iv. Element [28C] 72

v. Element [28D] 73

vi. Element [28G] 73

vii. Element [28H] 74

viii. Element [28I] 74

ix. Element [28J] 75

x. Element [28K] 75

xi. Element [28L] 76

xii. Element [28M] 76

5. Apple Infringes '648 Patent Claim 12 77

a. Disputed Elements 77

i. Element [8E] 77

b. Undisputed Elements 77

MASIMO 2042
Apple v. Masimo
IPR2024-00241

TABLE OF CONTENTS
(*cont'd*)

Page No.

i. Element [8PRE] 77

ii. Element [8A] 78

iii. Element [8B] 78

iv. Element [8C] 78

v. Element [8D] 78

vi. Element [8F] 78

vii. Element [8G] 79

viii. Element [8H] 79

ix. Element [8I] 80

x. Element [12] 80

6. Apple Infringes '648 Patent Claims 24 and 30 80

a. Disputed Elements 80

i. Element [20C] 80

ii. Element [20D] 81

b. Undisputed Elements 81

i. Element [20PRE] 81

ii. Element [20A] 82

iii. Element [20B] 82

iv. Element [20E] 82

v. Element [24] 82

vi. Element [30] 82

MASIMO 2042
Apple v. Masimo
IPR2024-00241

TABLE OF CONTENTS
(*cont'd*)

Page No.

D. Domestic Industry – "Technical Prong" 83

1. Masimo Watch Products Satisfy '501 Patent Claim 12 85

a. Element [1PRE] 86

b. Element [1A] 89

c. Element [1B] 91

d. Element [1C] 92

e. Element [1D] 93

f. Element [1E] 96

g. Element [1F] 99

h. Element [12] 102

2. Masimo Watch Products Satisfy '502 Patent Claim 28 102

a. Element [28PRE] 102

b. Element [28A] 103

c. Element [28B] 103

d. Element [28C] 103

e. Element [28D] 104

f. Element [28E] 106

g. Element [28F] 106

h. Element [28G] 106

i. Element [28H] 107

j. Element [28I] 108

MASIMO 2042
Apple v. Masimo
IPR2024-00241

TABLE OF CONTENTS
(*cont'd*)

Page No.

k. Element [28J] 108

l. Element [28K] 111

m. Element [28L] 111

n. Element [28M] (Undisputed for W1, [redacted]) 112

3. Masimo Watch Products Satisfy '648 Patent Claim 12 112

a. Element [8PRE] 112

b. Element [8A] 112

c. Element [8B] 113

d. Element [8C] 113

e. Element [8D] 113

f. Element [8E] 113

g. Element [8F] 113

h. Element [8G] 114

i. Element [8H] 114

j. Element [8I] 115

k. Element [12] 115

4. Masimo Watch Products Satisfy '648 Patent Claims 24 and 30 115

a. Element [20PRE] 115

b. Element [20A] 115

c. Element [20B] 115

d. Element [20C] 116

MASIMO 2042
Apple v. Masimo
IPR2024-00241

TABLE OF CONTENTS
(*cont'd*)

Page No.

e. Element [20D] 116

f. Element [20E] 116

g. Element [24] 117

h. Element [30] 117

E. Validity 118

1. Apple's "State of the Art" Approach Demonstrates Its Hindsight Analysis 119

2. Legal Standard 121

3. Anticipation/Obviousness 122

a. Ground 1 – Lumidigm Does Not Anticipate or Render Obvious Any Asserted Claim 123

i. Lumidigm Does Not Disclose or Render Obvious a User-Worn Device Configured to Calculate, Determine, or Output Measurements of SpO_2 or Another Physiological Parameter 124

ii. No Disclosure of Photodiodes or Motivation to Include Them 129

iii. No Disclosure or Suggestion of a Protrusion Comprising a Convex Surface 130

iv. No Motivation or Expectation of Success for a Protrusion Comprising a Convex Surface 133

v. No Disclosure, Suggestion, or Motivation for a Protrusion Over or Above an "Interior Surface" 136

vi. No "Openings"/"Through Holes" in Protrusion, or "Windows"/"Optically Transparent Material" Therein 138

MASIMO 2042
Apple v. Masimo
IPR2024-00241

TABLE OF CONTENTS
(*cont'd*)

Page No.

vii. No Disclosure or Motivation for Opaque Lateral Surface or Opaque Material Configured to Avoid/Reduce Light Piping 139

viii. No Disclosure or Motivation for a Thermistor or Adjusting Device Operation Responsive to Temperature Signal 140

ix. No Disclosure, Suggestion, or Motivation of Claimed Cavities 141

x. Lumidigm Fails to Render Obvious a Network Interface, User Interface Comprising a Touch-Screen, or Storage Device As Claimed 141

xi. Lumidigm Fails to Disclose or Render Obvious "The Protrusion Further Comprising One or More Chamfered Edges" 142

xii. Failure to Treat the Asserted Claims as an Integrated Whole 143

b. Ground 2 – Lumidigm + Seiko 131 + Cramer Does Not Render Obvious Any Asserted Claim 144

i. Cramer Does Not Disclose or Suggest the Claim Elements For Which It Is Asserted 144

ii. Seiko 131 Does Not Disclose or Suggest the Claim Elements For Which It Is Asserted 148

iii. No Motivation to Combine or Reasonable Expectation of Success in Combining Lumidigm + Seiko 131 + Cramer 151

c. Ground 3 – Lumidigm + Webster Does Not Render Obvious '502 Patent Claim 22 153

MASIMO 2042
Apple v. Masimo
IPR2024-00241

TABLE OF CONTENTS
(*cont'd*)

Page No.

d. Ground 4 – Lumidigm + Seiko 131 + Cramer + Webster Does Not Render Obvious '502 Patent Claim 22 155

e. Ground 5 – Lumidigm + Webster + Apple 047 Does Not Render Obvious '502 Patent Claim 28 155

f. Ground 6 – Lumidigm + Seiko 131 + Cramer + Webster + Apple 047 Does Not Render Obvious '502 Patent Claim 28 157

g. Grounds 7-9 – Kansas State 6D Is No Longer Asserted..... 158

h. Objective Indicia of Nonobviousness 158

i. Legal Standard 158

ii. Apple's Skepticism of the Protrusions of the Multi-Detector Patents 160

iii. The Protrusions of the Multi-Detector Patents Achieved Unexpected Results 161

iv. Apple's Skepticism and Failures Demonstrate the Non-Obviousness of the Asserted Claims 165

v. Apple's Copying of Masimo's Patented Technology 172

vi. Commercial Success 173

4. 35 U.S.C. § 112 (pre-AIA)..... 175

a. Written Description..... 175

i. Claimed Combinations of LEDs, Photodiodes, and Openings with Opaque Surfaces ('501 Patent Claim 12; '502 Patent Claims 22, 28; '648 Patent Claim 12) 176

MASIMO 2042
Apple v. Masimo
IPR2024-00241

TABLE OF CONTENTS
(*cont'd*)

Page No.

ii. Sets of LEDs Each Emitting at a First Wavelength and a Second Wavelength ('502 Patent Claim 28) 179

iii. "At Least Four Emitters … Wherein Each of the Plurality of Emitters Comprises a Respective Set of at Least Three LEDs" ('502 Patent Claim 22) 180

b. Enablement 180

i. "Touch-Screen Display" and "Indicia of Measurements" ('502 Patent Claim 28)..... 181

ii. Reducing/Avoiding "Light Piping" ('501 Patent Claim 12; '502 Patent Claim 28; '648 Patent Claim 24) 182

F. Enforceability (Prosecution Laches)..... 183

IV. '745 PATENT..... 185

A. Level of Ordinary Skill in the Art..... 185

B. Claim Construction 185

1. "second shape"..... 185

2. "first shape" 186

C. Infringement..... 188

1. Claim 9..... 188

a. Element [1PRE] 188

b. Element [1A]..... 188

c. Element [1B]..... 190

d. Element [1C]..... 196

MASIMO 2042
Apple v. Masimo
IPR2024-00241

TABLE OF CONTENTS
(*cont'd*)

Page No.

e. Element [1D] 197

f. Element [1E] 198

g. Element [1F] 199

h. Element [9] 199

2. Claim 27 199

a. Element [20PRE] 201

b. Elements [20A]-[20F] 201

c. Element [20G] 201

d. Element [27] 202

D. Domestic Industry – "Technical Prong" 203

1. Claim 18 203

a. Element [15PRE] 204

b. Element [15A] 204

c. Element [15B] - Disputed 205

d. Element [15C] 207

e. Element [15D] 207

f. Element [15E] 208

g. Element [15F] 209

h. Element [15G] 209

i. Element [15H] – Disputed 209

j. Element [15I] 211

MASIMO 2042
Apple v. Masimo
IPR2024-00241

TABLE OF CONTENTS
(*cont'd*)

Page No.

k. Element [18] 211

E. Validity 212

1. Anticipation/Obviousness 212

a. Ground 1: Apple Has Not Established that the Series 0 Renders Obvious Claims 9 and 27 or Anticipates Claim 27 212

i. Apple Has Not Established that The Series 0 is Prior Art to the '745 Patent 212

ii. Apple Has Not Established The Structure and Function of The Series 0 213

iii. The Series 0 Does Not Render Obvious Claims 9 and 27 or Anticipate Claim 27 218

b. Grounds 2 and 3: Claims 9, 18, and 27 Are Not Rendered Obvious by Iwamiya Alone or in Combination with Sarantos (and Venkatraman for Claims 18 and 27) 224

i. No measurement of "oxygen saturation" 225

ii. No "second wavelength" 230

iii. No "surface comprising a dark-colored coating" 230

iv. No plurality of photodiodes "arranged in an array having a spatial configuration corresponding to a shape of the portion of the tissue measurement site encircled by the light block" 232

c. Objective Indicia of Nonobviousness 233

2. 35 U.S.C. § 112 (AIA) 235

MASIMO 2042
Apple v. Masimo
IPR2024-00241

TABLE OF CONTENTS
(*cont'd*)

Page No.

a. Claims 9 and 27 Have Written-Description Support 235

b. Claim 18 Is Definite 236

F. Enforceability (Prosecution Laches) 238

V. '127 PATENT 239

A. Level of Ordinary Skill in the Art 239

B. Claim Construction 239

1. "thermal mass" 240

2. "bulk temperature" 244

C. Infringement 248

1. Claim 9 248

a. Element [7PRE] 254

b. Element [7A] 254

c. Element [7B] 258

d. Elements [7C]-[7E] 259

e. Element [7F] 262

f. Element [7G] 265

g. Element [7H] 266

h. Element [9] 266

D. Domestic Industry – "Technical Prong" 266

1. Element [7PRE] 266

2. Element [7A] 267

MASIMO 2042
Apple v. Masimo
IPR2024-00241

TABLE OF CONTENTS
(*cont'd*)

Page No.

a. Current rainbow® sensors 267

b. Early rainbow® sensors 268

c. Apple's arguments based on its new incorrect claim construction do not show lack of domestic industry 269

3. Element [7B] 269

a. Current rainbow® sensors 269

b. Early rainbow® sensors 270

4. Elements [7C]-[7E] and [9] 271

5. Element [7F] 271

6. Elements [7G] and [7H] 273

E. Validity 274

1. Obviousness 275

a. The Examiner allowed Claim 9 over Cheung 275

b. Claim 9 would not have been obvious over either Apple obviousness ground. 277

i. Ground 1 – Mendelson and Webster 277

(a) Mendelson does not disclose [7A], [7D], [7E], [7F], or [9]. 277

(b) Mendelson and Webster would not make Claim 9 obvious. 279

ii. Ground 2 – Yamada and Noguchi 280

(a) Yamada does not disclose [7A], [7D], [7E], or [7F]. 280

MASIMO 2042
Apple v. Masimo
IPR2024-00241

TABLE OF CONTENTS
(*cont'd*)

Page No.

(b) Yamada and Noguchi would not make Claim 9 obvious. 283

iii. Additional grounds including Scarlett 283

c. No Motivation to Combine or Expectation Of Success 284

d. Objective Indicia of Nonobviousness 285

VI. DOMESTIC INDUSTRY – ECONOMIC PRONG 288

A. Significant Investment in Plant and Equipment 301

1. Masimo Watch 301

2. rainbow® Sensors 302

B. Significant Employment of Labor or Capital 303

1. Masimo Watch 303

2. rainbow® Sensors 309

VII. REMEDY AND BONDING 310

A. Limited Exclusion Order 310

B. Cease and Desist Order 311

C. Applicability to Next-Generation Apple Watches 311

D. Bond 312

VIII. CONCLUSION 313

MASIMO 2042
Apple v. Masimo
IPR2024-00241

TABLE OF AUTHORITIES

Page No(s).

ActiveVideo Networks, Inc. v. Verizon Commc'ns, Inc.,
694 F.3d 1312 (Fed. Cir. 2012)..... *passim*

Adidas AG v. Nike, Inc.,
963 F.3d 1355 (Fed. Cir. 2020), *cert. denied*, 141 S. Ct. 1376 (2021)..... 131, 143, 144

Advanced Cardiovascular Sys., Inc. v. Medtronic, Inc.,
265 F.3d 1294 (Fed. Cir. 2001)..... 241

AK Steel Corp. v. Sollac & Ugine,
344 F.3d 1234 (Fed. Cir. 2003)..... 184

Al-Site Corp. v. VSI Int'l, Inc.,
174 F.3d 1308 (Fed. Cir. 1999)..... 123

Alloc, Inc. v. Int'l Trade Comm'n,
342 F.3d 1361 (Fed. Cir. 2003)..... *passim*

Apple Inc. v. Samsung Elecs. Co., Ltd.,
839 F.3d 1034 (Fed. Cir. 2016)..... 162, 163, 178

Ashland Oil, Inc. v. Delta Resins & Refractories, Inc.,
776 F.2d 281 (Fed. Cir. 1985)..... 224

Atlantic Thermoplastics Co. v. Faytex Corp.,
970 F.2d 834, 23 USPQ2d 1481 (Fed. Cir. 1992) 246, 260

BASF Corp. v. Johnson Matthey Inc.,
875 F.3d 1360 (Fed. Cir. 2017)..... 239

Belden Inc. v. Berk-Tek LLC,
805 F.3d 1064 (Fed. Cir. 2015)..... 226, 234, 285

Cancer Research Tech. Ltd. v. Barr Labs., Inc.,
625 F.3d 724 (Fed. Cir. 2010)..... 186, 241

Cephalon, Inc. v. Watson Pharm., Inc.,
707 F.3d 1330 (Fed. Cir. 2013)..... 210, 211

Certain Battery-Powered Ride-On Toy Vehicles,
Inv. No. 337-TA-314, USITC Pub. No. 2420..... 291

MASIMO 2042
Apple v. Masimo
IPR2024-00241

TABLE OF AUTHORITIES
(*cont'd*)

Page No(s).

Certain Beverage Brewing Capsules,
Inv. No. 337-TA-929, Comm'n Op. at 19-21 (Apr. 5, 2016) 203

Certain Chemical Mechanical Planarization Slurries,
337-TA-1204, Initial Determination at 188-189 (July 8, 2021) 231, 234, 235

Certain Elec. Devices,
Inv. No. 337-TA-701, Order No. 58, 2010 WL 5621540
(Nov. 18, 2010) 291, 292

Certain Handheld Electronic Computing Devices,
Inv. No. 337-TA-769, Doc. ID 472348, Order No. 34 at 7-12
(Feb. 6, 2012) 292, 311

Certain Hardware Logic Emulation Systems,
Inv. No. 337-TA-383, Comm'n Op., 1998 WL 307240 (Mar. 1, 1998)..... 314, 315

Certain High-Density Fiber Optic Equipment,
Inv. No. 337-TA-1194, Doc. ID 740348 ..... 45, 46, 47, 51

Certain Light-Emitting Diode Prods.,
Inv. No. 337-TA-1213, Doc. ID 750242 40

Certain Memory Modules,
Inv. No. 337-TA-1089, Comm'n Op., 2022 WL 834257 (Feb. 1, 2022) 85

Certain Mobile Devices with Multifunction Emulators,
Inv. No. 337-TA-1170, Order No. 19, 2020 WL 3819518
(June 9, 2020)..... 60, 64, 303, 304

Certain Mobile Elec. Devices,
Inv. No. 337-TA-1093, I.D., 2019 WL 2058009 (Mar. 26, 2019)..... 42

Certain Semiconductor Chips,
Inv. No. 337-TA-630, Doc. ID 409629, Order No. 47, at 65-66
(August 28, 2009) 313, 314

Certain Television Sets,
Inv. No. 337-TA-910, Doc. ID 568157, Comm'n Op. at 41
(Oct. 30, 2015) 203, 292

MASIMO 2042
Apple v. Masimo
IPR2024-00241

TABLE OF AUTHORITIES
(*cont'd*)

Page No(s).

Certain Toner Cartridges,
Inv. No. 337-TA-1174, Doc. ID 716848 41

Crocs, Inc. v. Int'l Trade Comm'n,
598 F.3d 1294 (Fed. Cir. 2010)..... 162

Demaco Corp. v. F. Von Langsdorff Licensing Ltd.,
851 F.2d 1387 (Fed. Cir. 1988)..... 162

Finnigan Corp. v. Int'l Trade Comm'n,
180 F.3d 1354 (Fed. Cir. 1999)..... 216, 224

Flash-Control, LLC v. Intel Corp.,
No. 2020-2141, 2021 WL 2944592 (Fed. Cir. July 14, 2021)..... 181

In re Giannelli,
739 F.3d 1375 (Fed. Cir. 2014)..... 45

Graham v. John Deere Co. of Kan. City,
383 U.S. 1 (1966)..... 161, 162

Guangdong Alison Hi-Tech Co. v. Int'l Trade Comm'n,
936 F.3d 1353 (Fed. Cir. 2019)..... 131, 135

Hyatt v. Hirshfeld,
998 F.3d 1347 (Fed. Cir. 2021)..... 186, 187

Hynix Semiconductor Inc. v. Rambus Inc.,
645 F.3d 1336 (Fed. Cir. 2011)..... 138

InTouch Techs., Inc. v. VGo Communs., Inc.,
751 F.3d 1327 (Fed. Cir. 2014)..... 122

Juicy Whip Inc. v. Orange Bang, Inc.,
292 F.3d 728 (Fed. Cir. 2002)..... 224, 225

J.T. Eaton & Co. v. Atl. Paste & Glue Co.,
106 F.3d 1563 (Fed. Cir. 1997)..... 162

Kinetic Concepts, Inc. v. Smith & Nephew, Inc.,
688 F.3d 1342 (Fed. Cir. 2012)..... 235

MASIMO 2042
Apple v. Masimo
IPR2024-00241

TABLE OF AUTHORITIES
(*cont'd*)

Page No(s).

Kingsdown Medical Consultants, Ltd. v. Hollister, Inc.,
863 F.2d 867 (Fed. Cir. 1988)..... 188

Kraft Foods, Inc. v. *Int'l Trading Co.*,
203 F.3d 1362 (Fed. Cir. 2000)..... 55

KSR Int'l Co. v. Teleflex Inc.,
550 U.S. 398 (2007)..... 123

Lindemann Maschinenfabrik v. Am. Hoist & Derrick,
730 F.2d 1452 (Fed. Cir. 1984)..... 122, 146

Mallinckrodt, Inc. v. Masimo Corp.,
No. 2:00-cv-06506, 2004 U.S. Dist. LEXIS 28518 (C.D. Cal. 2004), *aff'd in part and rev'd in part, reh'g en banc denied*, 147 Fed. Appx. 158 (Fed. Circ. 2005), *cert. dismissed*, 546 U.S. 1162 (2006)..... 172

Masimo Corp v. Philips Elec. N. Am. Corp.,
No. 1:09-cv-00080, 2015 WL 2379485 (D. Del. May 18, 2015) 9, 11, 12, 13

Nautilus, Inc. v. Biosig Instruments, Inc.,
572 U.S. 898 (2014)..... 239, 241

Nazomi Commc'ns, Inc. v. Nokia Corp.,
739 F.3d 1339 (Fed. Cir. 2014)..... 57, 58

Neptune Generics, LLC v. Eli Lilly & Co.,
921 F.3d 1372 (Fed. Cir. 2019)..... 164, 166

Net MoneyIN, Inc. v. VeriSign, Inc.,
545 F.3d 1359 (Fed. Cir. 2008)..... 123

In re NTP, Inc.,
654 F.3d 1279 (Fed. Cir. 2011)..... 122

Osram Sylvania, Inc. v. Am. Induction Techs., Inc.,
701 F.3d 698 (Fed. Cir. 2012)..... 123

Otsuka Pharm. Co. v. Sandoz, Inc.,
678 F.3d 1280 (Fed. Cir. 2012)..... 155

MASIMO 2042
Apple v. Masimo
IPR2024-00241

TABLE OF AUTHORITIES
(*cont'd*)

Page No(s).

PAR Pharm., Inc. v. TWI Pharms., Inc.,
773 F.3d 1186 (Fed. Cir. 2014)..... 139, 154

Personal Web Techs., LLC v. Apple, Inc.,
848 F.3d 987 (Fed. Cir. 2017)..... 13, 138, 222, 230

Roche Diagnostics Corp. v. Bioveris Corp.,
30 F.4th 1109 (Fed. Cir. 2022) 203

Roche Palo Alto LLC v. Ranbaxy Labs. Ltd.,
No. 3:06-cv-02003, 2009 WL 3261252 (D.N.J. Sept. 30, 2009)..... 123, 124, 128, 129

Rohm and Haas Co. v. Brotech Corp.,
127 F.3d 1089 (Fed. Cir. 1997)..... 198, 202

Scanner Techs. Corp. v. ICOS Vision Sys. Corp. N.V.,
528 F.3d 1365 (Fed. Cir. 2008)..... 123

Shire LLC v. Amneal Pharms., LLC,
802 F.3d 1301 (Fed. Cir. 2015)..... 123, 228, 229

Silicon Graphics, Inc. v. ATI Techs., Inc.,
607 F.3d 784 (Fed. Cir. 2010)..... 57

SRAM Corp. v. AD-II Eng'g, Inc.,
465 F.3d 1351 (Fed. Cir. 2006)..... 123

Stratoflex, Inc. v. Aeroquip Corp.,
713 F.2d 1530 (Fed. Cir. 1983)..... 161

Streck, Inc. v. Research & Diagnostic Sys., Inc.,
665 F.3d 1269 (Fed. Cir. 2012)..... 179, 238

Tanabe Seiyaku Co. v. *Int'l Trade Comm'n*,
109 F.3d 726 (Fed. Cir. 1997)..... 54

Tec Air, Inc. v. Denso Mfg. Michigan Inc.,
192 F.3d 1353 (Fed. Cir. 1999)..... 230

TF3 Ltd. v. Tre Milano, LLC,
894 F.3d 1366 (Fed. Cir. 2018)..... 130

MASIMO 2042
Apple v. Masimo
IPR2024-00241

TABLE OF AUTHORITIES
(*cont'd*)

Page No(s).

Tobinick v. Olmarker,
753 F.3d 1220 (Fed. Cir. 2014)..... 179, 238

Transocean Offshore Deepwater Drilling, Inc. v. Maersk Drilling USA, Inc.,
699 F.3d 1340 (Fed. Cir. 2012)..... 161

Trintec Indus., *Inc. v. Top-U.S.A. Corp.*,
295 F.3d 1292 (Fed. Cir. 2002)..... 133

Univ. of Strathclyde v. Clear-Vu Lighting LLC,
17 F.4th 155 (Fed. Cir. 2021) 157

Verizon Servs. Corp. v. Vonage Holdings Corp.,
503 F.3d 1295 (Fed. Cir. 2007)..... 190, 191

Vitronics Corp. v. Conceptronic, Inc.,
90 F.3d 1576 (Fed. Cir. 1996)..... 52, 190, 249

Vivid Techs., Inc. v. Am. Sci. & Eng'g, Inc.,
200 F.3d 795 (Fed. Cir. 1999)..... 52

W.L. Gore & Assoc, Inc. v. Garlock, Inc.,
842 F.2d 1275 (Fed. Cir. 1988)..... 49, 51

WBIP, LLC v. Kohler Co.,
829 F.3d 1317 (Fed. Cir. 2016)..... 161, 162

Wellman, Inc. v. Eastman Chem. Co.,
642 F.3d 1355 (Fed. Cir. 2011)..... 179

Zenith Labs., Inc. v. Bristol-Myers Squibb Co.,
19 F.3d 1418 (Fed. Cir. 1994)..... 246, 260

OTHER AUTHORITIES

19 C.F.R. § 210.12 203

19 U.S.C. § 1337..... 42, 313, 314

35 U.S.C. § 112..... 179, 238

35 U.S.C. § 282..... 123

MASIMO 2042
Apple v. Masimo
IPR2024-00241

TABLE OF AUTHORITIES
(*cont'd*)

Page No(s).

Section 337 of the Tariff Act ..... *passim*

86 Fed. Reg. 46275 (Aug. 26, 2021)..... 7

MPEP § 2111.03 (9th ed.) (2020)..... 189

MASIMO 2042
Apple v. Masimo
IPR2024-00241

TABLE OF ACRONYMS AND ABBREVIATIONS

Abbreviation	Description
'127 Patent	U.S. Patent No. 7,761,127
'501 Patent	U.S. Patent No. 10,912,501
'502 Patent	U.S. Patent No. 10,912,502
'648 Patent	U.S. Patent No. 10,945,648
'745 Patent	U.S. Patent No. 10,687,745
127 DI Products	'127 Patent Domestic Industry Products (Current rainbow® sensors and Early rainbow® sensors)
745 DI Products	'745 Patent Domestic Industry Products [redacted] W1)
Accused Products	Apple Watch Series 6 (model nos. A2291-A2294, "Series 6"), Apple Watch Series 7 (model nos. A2473-A2475 and A2477, "Series 7"), and Next-Generation Apple Watches
AP	Application processor
Apple	Respondent Apple Inc.
Apple 047	U.S. Patent No. 9,001,047 (RX-0673)
Cercacor	Complainant Cercacor Laboratories, Inc.
Cheung	U.S. Patent No. 5,259,381 (RX-0406)
[redacted]	Masimo Watches with [redacted] (example: CPX-0021C and CPX-0014)
Compl.	First Amended Complaint
Cramer	U.S. Patent No. 4,224,948 (RX-0670)
ERS	Engineering Requirements Specification
Iwamiya	U.S. Patent No. 8,670,819 (RX-0130)
Lumidigm	U.S. Patent No. 7,620,212 (RX-0411)
Masimo	Complainants Masimo Corporation and Cercacor Laboratories, Inc.
Masimo Corp.	Complainant Masimo Corporation
Mendelson	Invasive and Non-invasive Blood Gas Monitoring by Y. Mendelson (RX-0370 & RX 0458)
Mendelson '799	U.S. Patent No. 6,801,799
MLA	Microlens array
MPEP	Manual of Patent Examining Procedure
Multi-Detector Patents	The '501, '502, and '648 Patents
Noguchi	U.S. Patent No. 5,334,916 (RX-0353)
PHB	Pre-hearing brief
POSITA	Person of Ordinary Skill in the Art
PVD	Physical vapor deposition
Resp.	Response
[redacted]	Masimo Watches with [redacted] examples: CPX-0052C, CPX-0012C, CPX-0013C)
[redacted]	Masimo Watches with [redacted] (example: CPX-0058C)
[redacted]	Masimo Watches with [redacted] (examples: CPX-0019C, CPX-0020C, CPX-0065C)
RTP	Real-time processor
Sarantos	U.S. Patent No. 9,392,946 (RX-0366)

MASIMO 2042
Apple v. Masimo
IPR2024-00241

Abbreviation	Description
Scarlett	The Multilayer Printed Circuit Board Handbook by J.A. Scarlett (RX-0397)
Seiko 131	U.S. Patent No. 5,776,131 (RX-0666)
SiP	System-in-package
SpO_2	Oxygen saturation
Venkatraman	U.S. Patent No. 8,998,815 (RX-0368)
W1	Masimo Watch W1 (examples: CPX-0146C, CPX-0157C)
Webster	Design of Pulse Oximeters by J.G. Webster (RX-0035)
[redacted]	Masimo Watches with [redacted] (example: CPX-0029C and CPX-0014)
Yamada	Japanese Unexamined Patent Application Publication No. 2004-337605 (RX-0381)

MASIMO 2042
Apple v. Masimo
IPR2024-00241

TABLES OF CLAIM ELEMENT IDENTIFIERS

U.S. Patent No. 10,912,501	
Identifier	**Claim/Element**
Claim 12	
[1PRE]	A user-worn device configured to noninvasively measure a physiological parameter of a user, the user-worn device comprising:
[1A]	at least three light emitting diodes (LEDs);
[1B]	at least three photodiodes arranged on an interior surface of the user-worn device and configured to receive light attenuated by tissue of the user;
[1C]	a protrusion arranged over the interior surface, the protrusion comprising a convex surface and
[1D]	a plurality of openings extending through the protrusion and positioned over the three photodiodes,
[1E]	the openings each comprising an opaque lateral surface, the plurality of openings configured to allow light to reach the photodiodes, the opaque lateral surface configured to avoid light piping through the protrusion; and
[1F]	one or more processors configured to receive one or more signals from the photodiodes and calculate a measurement of the physiological parameter of the user.
[12]	The user-worn device of Claim 1, wherein the convex surface of the protrusion is an outermost surface configured to contact the tissue of the user and conform the tissue into a concave shape.

MASIMO 2042
Apple v. Masimo
IPR2024-00241

U.S. Patent No. 10,912,502	
Identifier	**Claim/Element**
Claim 22	
[19PRE]	A user-worn device configured to non-invasively measure an oxygen saturation of a user, the user worn device comprising:
[19A]	a plurality of emitters configured to emit light, each of the emitters comprising at least two light emitting diodes (LEDs);
[19B]	four photodiodes arranged within the user-worn device and configured to receive light after at least a portion of the light has been attenuated by tissue of the user;
[19C]	a protrusion comprising a convex surface including separate openings extending through the protrusion and lined with opaque material, each opening positioned over a different one of the four photodiodes, the opaque material configured to reduce an amount of light reaching the photodiodes without being attenuated by the tissue;
[19D]	optically transparent material within each of the openings; and
[19E]	one or more processors configured to receive one or more signals from at least one of the four photodiodes and output measurements responsive to the one or more signals, the measurements indicative of the oxygen saturation of the user.
[20]	The user-worn device of claim 19 further comprising a thermistor.
[21]	The user-worn device of claim 20, wherein the one or more processors are further configured to receive a temperature signal from the thermistor and adjust operation of the user-worn device responsive to the temperature signal.
[22]	The user-worn device of claim 21, wherein the plurality of emitters comprise at least four emitters, and wherein each of the plurality of emitters comprises a respective set of at least three LEDs.

MASIMO 2042
Apple v. Masimo
IPR2024-00241

U.S. Patent No. 10,912,502	
Identifier	**Claim/Element**
Claim 28	
[28PRE]	A user-worn device configured to non-invasively measure an oxygen saturation of a user, the user worn device comprising:
[28A]	a first set of light emitting diodes (LEDs), the first set of LEDs comprising at least an LED configured to emit light at a first wavelength and an LED configured to emit light at a second wavelength;
[28B]	a second set of LEDs spaced apart from the first set of LEDs, the second set of LEDs comprising at least an LED configured to emit light at the first wavelength and an LED configured to emit light at the second wavelength;
[28C]	four photodiodes arranged in a quadrant configuration on an interior surface of the user-worn device and configured to receive light after at least a portion of the light has been attenuated by tissue of the user;
[28D]	a thermistor configured to provide a temperature signal;
[28E]	a protrusion arranged above the interior surface, the protrusion comprising: a convex surface;
[28F]	a plurality of openings in the convex surface, extending through the protrusion, and aligned with the four photodiodes, each opening defined by an opaque surface configured to reduce light piping; and
[28G]	a plurality of transmissive windows, each of the transmissive windows extending across a different one of the openings;
[28H]	at least one opaque wall extending between the interior surface and the protrusion, wherein at least the interior surface, the opaque wall and the protrusion form cavities, wherein the photodiodes are arranged on the interior surface within the cavities;
[28I]	one or more processors configured to receive one or more signals from at least one of the photodiodes and calculate an oxygen saturation measurement of the user, the one or more processors further configured to receive the temperature signal;
[28J]	a network interface configured to wirelessly communicate the oxygen saturation measurement to at least one of a mobile phone or an electronic network;
[28K]	a user interface comprising a touch-screen display, wherein the user interface is configured to display indicia responsive to the oxygen saturation measurement of the user;
[28L]	a storage device configured to at least temporarily store at least the measurement; and
[28M]	a strap configured to position the user-worn device on the user.

MASIMO 2042
Apple v. Masimo
IPR2024-00241

U.S. Patent No. 10,945,648	
Identifier	**Claim/Element**
Claim 12	
[8PRE]	A user-worn device configured to non-invasively determine measurements of a physiological parameter of a user, the user-worn device comprising:
[8A]	a first set of light emitting diodes (LEDs), the first set comprising at least an LED configured to emit light at a first wavelength and at least an LED configured to emit light at a second wavelength;
[8B]	a second set of LEDs spaced apart from the first set of LEDs, the second set of LEDs comprising an LED configured to emit light at the first wavelength and an LED configured to emit light at the second wavelength;
[8C]	four photodiodes;
[8D]	a protrusion comprising a convex surface, at least a portion of the protrusion comprising an opaque material;
[8E]	a plurality of openings provided through the protrusion and the convex surface, the openings aligned with the photodiodes;
[8F]	a separate optically transparent window extending across each of the openings;
[8G]	one or more processors configured to receive one or more signals from at least one of the photodiodes and output measurements of a physiological parameter of a user;
[8H]	a housing; and
[8I]	a strap configured to position the housing proximate tissue of the user when the device is worn.
[12]	The user-worn device of Claim 8, wherein the physiological parameter comprises oxygen or oxygen saturation.
Claim 24	
[20PRE]	A user-worn device configured to non-invasively determine measurements of a user's tissue, the user-worn device comprising:
[20A]	a plurality of light emitting diodes (LEDs);
[20B]	at least four photodiodes configured to receive light emitted by the LEDs, the four photodiodes being arranged to capture light at different quadrants of tissue of a user;
[20C]	a protrusion comprising a convex surface and
[20D]	a plurality of through holes, each through hole including a window and arranged over a different one of the at least four photodiodes; and
[20E]	one or more processors configured to receive one or more signals from at least one of the photodiodes and determine measurements of oxygen saturation of the user.
[24]	The user-worn device of Claim 20, wherein the protrusion comprises opaque material configured to substantially prevent light piping.

MASIMO 2042
Apple v. Masimo
IPR2024-00241

U.S. Patent No. 10,945,648	
Identifier	**Claim/Element**
Claim 30	
[20PRE]	A user-worn device configured to non-invasively determine measurements of a user's tissue, the user-worn device comprising:
[20A]	a plurality of light emitting diodes (LEDs);
[20B]	at least four photodiodes configured to receive light emitted by the LEDs, the four photodiodes being arranged to capture light at different quadrants of tissue of a user;
[20C]	a protrusion comprising a convex surface and
[20D]	a plurality of through holes, each through hole including a window and arranged over a different one of the at least four photodiodes; and
[20E]	one or more processors configured to receive one or more signals from at least one of the photodiodes and determine measurements of oxygen saturation of the user.
[30]	The user-worn device of Claim 20, wherein the protrusion further comprises one or more chamfered edges.

MASIMO 2042
Apple v. Masimo
IPR2024-00241

U.S. Patent No. 10,687,745	
Identifier	**Claim/Element**
Claim 9	
[1PRE]	A physiological monitoring device comprising:
[1A]	a plurality of light-emitting diodes configured to emit light in a first shape;
[1B]	a material configured to be positioned between the plurality of light-emitting diodes and tissue on a wrist of a user when the physiological monitoring device is in use, the material configured to change the first shape into a second shape by which the light emitted from one or more of the plurality of light-emitting diodes is projected towards the tissue;
[1C]	a plurality of photodiodes configured to detect at least a portion of the light after the at least the portion of the light passes through the tissue, the plurality of photodiodes further configured to output at least one signal responsive to the detected light;
[1D]	a surface comprising a dark-colored coating, the surface configured to be positioned between the plurality of photodiodes and the tissue when the physiological monitoring device is in use, wherein an opening defined in the dark-colored coating is configured to allow at least a portion of light reflected from the tissue to pass through the surface;
[1E]	a light block configured to prevent at least a portion of the light emitted from the plurality of light-emitting diodes from reaching the plurality of photodiodes without first reaching the tissue;
[1F]	and a processor configured to receive and process the outputted at least one signal and determine a physiological parameter of the user responsive to the outputted at least one signal.
[9]	The physiological monitoring device of claim 1, wherein the physiological parameter comprises oxygen saturation.

MASIMO 2042
Apple v. Masimo
IPR2024-00241

U.S. Patent No. 10,687,745	
Identifier	**Claim/Element**
Claim 18	
[15PRE]	A physiological monitoring device comprising:
[15A]	a plurality of light-emitting diodes configured to emit light proximate a wrist of a user;
[15B]	a light diffusing material configured to be positioned between the plurality of light-emitting diodes and a tissue measurement site on the wrist of the user when the physiological monitoring device is in use;
[15C]	a light block having a circular shape;
[15D]	a plurality of photodiodes configured to detect at least a portion of the light emitted from the plurality of light-emitting diodes after the light passes through the light diffusing material and a portion of the tissue measurement site encircled by the light block, wherein the plurality of photodiodes are arranged in an array having a spatial configuration corresponding to a shape of the portion of the tissue measurement site encircled by the light block,
[15E]	wherein the plurality of photodiodes are further configured to output at least one signal responsive to the detected light, and
[15F]	wherein the plurality of light-emitting diodes and the plurality of photodiodes are arranged in a reflectance measurement configuration;
[15G]	wherein the light block is configured to optically isolate the plurality of light-emitting diodes from the plurality of photodiodes by preventing at least a portion of light emitted from the plurality of light-emitting diodes from reaching the plurality of photodiodes without first reaching the portion of the tissue measurement site;
[15H]	a processor configured to receive and process the outputted at least one signal and determine a physiological parameter of the user responsive to the outputted at least one signal; and
[15I]	wherein the physiological monitoring device is configured to transmit physiological parameter data to a separate processor.
[18]	The physiological monitoring device of claim 15, wherein the physiological parameter comprises oxygen saturation.

MASIMO 2042
Apple v. Masimo
IPR2024-00241

U.S. Patent No. 10,687,745	
Identifier	**Claim/Element**
Claim 27	
[20PRE]	A system configured to measure one or more physiological parameters of a user, the system comprising: a physiological monitoring device comprising:
[20A]	a plurality of light-emitting diodes configured to emit light in a first shape;
[20B]	a material configured to be positioned between the plurality of light-emitting diodes and tissue of the user when the physiological monitoring device is in use, the material configured to change the first shape into a second shape by which the light emitted from one or more of the plurality of light-emitting diodes is projected towards the tissue;
[20C]	a plurality of photodiodes configured to detect at least a portion of the light after the at least the portion of the light passes through the tissue, the plurality of photodiodes further configured to output at least one signal responsive to the detected light;
[20D]	a surface comprising a dark-colored coating, the surface configured to be positioned between the plurality of photodiodes and the tissue when the physiological monitoring device is in use, wherein an opening defined in the dark-colored coating is configured to allow at least a portion of light reflected from the tissue to pass through the surface;
[20E]	a light block configured to prevent at least a portion of light from the plurality of light-emitting diodes from reaching the plurality of photodiodes without first reaching the tissue; and
[20F]	a processor configured to receive and process the outputted at least one signal and determine a physiological parameter of the user responsive to the outputted at least one signal; and
[20G]	a processing device configured to wirelessly receive physiological parameter data from the physiological monitoring device, wherein the processing device comprises a user interface, a storage device, and a network interface configured to wirelessly communicate with the physiological monitoring device, and wherein the user interface includes a touch-screen display configured to present visual feedback responsive to the physiological parameter data.
[27]	The system of claim 20, wherein at least one of the plurality of light-emitting diodes is configured to emit light of a first wavelength and at least one of the plurality of light-emitting diodes is configured to emit light of a second wavelength, the second wavelength being different than the first wavelength.

U.S. Patent No. 7,761,127	
Identifier	**Claim/Element**
Claim 9	
[7PRE]	A physiological sensor capable of emitting light into tissue and producing an output signal usable to determine one or more physiological parameters of a patient, the physiological sensor comprising:
[7A]	a thermal mass;
[7B]	a plurality of light emitting sources, including a substrate of the plurality of light emitting sources, thermally coupled to the thermal mass,
[7C]	the sources having a corresponding plurality of operating wavelengths,
[7D]	the thermal mass disposed within the substrate;
[7E]	a temperature sensor thermally coupled to the thermal mass and
[7F]	[the temperature sensor] capable of determining a bulk temperature for the thermal mass, the operating wavelengths dependent on the bulk temperature; and
[7G]	a detector capable of detecting light emitted by the light emitting sources after tissue attenuation,
[7H]	wherein the detector is capable of outputting a signal usable to determine one or more physiological parameters of a patient based upon the operating wavelengths.
[9]	The physiological sensor according to claim 7 wherein the temperature sensor comprises a thermistor.

MASIMO 2042
Apple v. Masimo
IPR2024-00241

Pursuant to Ground Rule 13.1 (Order No. 4), Complainants Masimo Corporation and Cercacor Laboratories, Inc. (collectively, "Masimo") hereby submit their initial post-hearing brief.

I. INTRODUCTION

Throughout this Investigation, Masimo focused on the merits of Apple's unauthorized use of Masimo's patented technology in the accused Apple Watches imported from Asia. The evidence confirmed Apple violated Section 337 by importing Apple Watches infringing multiple claims of Masimo's five Asserted Patents covering devices for non-invasively monitoring blood parameters.

Masimo also established it meets the domestic industry requirement. For the Masimo Watch, Masimo introduced significant evidence of U.S. investment in the development and manufacture of the Masimo Watches practicing claims of four Asserted Patents. The prototypes evolved from the to the Masimo W1 Watch now and available to hospitals and to consumers who are willing to share feedback with Masimo. Masimo's domestic industry for the fifth patent, covering its rainbow® sensors, is well-established.

The evidence of record also shows Masimo's patents are valid. Apple's own timeline in developing a sensor that measures SpO_2 on the wrist confirms the non-obviousness of Masimo's claimed inventions. Despite seeking outside help from engineers experienced with pulse oximetry, tearing down Masimo's sensors, and closely studying Masimo's technology, CX-0177C at 13. Even after introducing its Series 0 Watch, Apple before launching the Blood-Oxygen feature in the Accused Products, Tr. (Waydo) at

MASIMO 2042
Apple v. Masimo
IPR2024-00241

938:21-24. CX-1790C at 1. But Apple eventually filed its own patent in 2016 on a sensor with a convex surface with openings extending from an interior surface to an exterior surface with an opaque light block. CX-1569. This patent filing occurred years after Apple now contends such features would have been obvious. These real-world facts show Apple's view of the prior art is based on pure hindsight, using the claimed inventions as a roadmap.

Apple's approach, which it continued during the hearing, was to distract from the merits. Apple's evidence was scant, at best. Instead, Apple repeatedly argued about irrelevant *inter partes* review (IPR) proceedings not part of the record, nor part of Apple's Pre-Hearing Brief, relying on attorney argument. Beginning with its opening statements, Apple argued "383 of the 384 claims that have been reviewed by the PTAB in the IPR proceedings have been invalidated, 383 out of 384." Tr. (Apple Opening) at 160:13-15; *see also id.* at 160:16-19, 161:7-9. Apple, however, introduced no evidence from the PTAB proceedings, instead relying on unsupported innuendo. This is not surprising because, as Dr. Madisetti explained, Apple's IPRs involved "different claims, different prior art, and all the prior art, all these patents, the prior art and other IPR material was disclosed to the Patent Office and considered by the Patent Office before the issuance of the claims that are asserted in this litigation matter." Tr. (Madisetti) at 1388:17-22. Apple's improper attorney speeches appear to have been an attempt to mislead. Had Apple pursued such arguments in its pre-hearing brief, Masimo would have presented the actual evidence rebutting them.

Apple repeatedly protested that Masimo was seeking to "ban[] the import to the U.S. of the leading Apple Watch models." Tr. (Apple Opening) at 43:2-3; *see also id.* at 41:2-54, 49:22-25, 75:23-76:4; Tr. (Kiani) at 168:7-11; Tr. (McGavock) at 555:14-24, 557:6-13; Tr. (Madisetti)

MASIMO 2042
Apple v. Masimo
IPR2024-00241

at 793:14-17. Apple's rants on this topic are irrelevant, and thus were an improper attempt to influence the Initial Determination based on public interest. Tr. (Apple Opening) at 49:22-50:1. The Commission did not delegate public interest to the ALJ. *See* Doc. ID. 749538. Had it been delegated, Masimo would have presented substantial evidence regarding the harm caused by Apple's sales of its poorly performing pulse oximeter, which rely on deceiving the public into believing Apple measures pulse oximetry in a clinically meaningful manner.

Masimo confirmed its "ask is not a prohibition on Apple's ability to import tens of millions of watches from its factories in Asia if it chooses to do so. Rather, Apple should not be allowed to import and distribute watches ***with the pulse oximetry sensor of the Series 6, Series 7***, and future watches, because those watches infringe the Masimo and Cercacor patents that protect [Masimo's] domestic industry, and that is a violation of Section 337." Tr. (Masimo Opening) at 38:15-22.[1] Apple has multiple watches not at issue in this Investigation. *See*, *e.g.*, CPX-0191.

Apple touted irrelevant features of the accused Apple Watches. For example, Apple questioned Masimo CEO Joe Kiani on features not claimed in the Asserted Patents. Tr. (Kiani)

[1] Emphasis added unless indicated otherwise.

MASIMO 2042
Apple v. Masimo
IPR2024-00241

at 164:19-165:22 (emails, text messaging, electronic payments, GPS, music, altimeter, compass, magnetic charging, microphone, speaker, Wi-Fi); *see also* Tr. (Land) at 970:12-971:13; Tr. (Apple Opening) at 48:14-49:13; RDX-0001.9-11. Apple incorrectly implied an exclusion order would render these features unavailable to the public, which again would be irrelevant to the Initial Determination. These features are readily available in watches not subject to this Investigation. *See, e.g.*, Tr. (Mannheimer) at 1021:15-1022:8.

Apple repeatedly dismissed the Masimo W1 as not available to purchase "in any store." Tr. (Apple Opening) at 42:14-16; *id.* at 71:10-14; Tr. (Kiani) at 166:18-167:3, 179:15-16, 180:20-23; Tr. (Al-Ali) at 339:14-22; Tr. (Muhsin) at 374:7-22; Tr. (Thomas) at 1308:17-20. Apple cites no authority suggesting domestic industry requires products to be available for in-store purchase. The evidence, however, established the Masimo W1 is available from Masimo. Tr. (Kiani) at 124:17-21. *Id.* at 124:21-24; Tr. (Muhsin) at 353:5-11. As the denial of Apple's motion for sanctions noted, Masimo pled a domestic industry exists or, alternatively, is in the process of being established. Order No. 31 (citing Compl. ¶86).

Apple argued that Masimo's domestic industry products do not compete with the Apple Watch. Tr. (Apple Opening) at 45:13-15 ("no competition between the Apple Watch and the rainbow[®] sensors"); *see also id.* at 71:12-14 (Masimo Watch is "not a commercial product in competition with the Apple Watch even today"); *id.* at 74:12-17, 75:11-17; Tr. (Kiani) at 180:8-23, 181:4-7; Tr. (Young) at 513:5-23; Tr. (McGavock) at 572:22-573:8. Competition, however, is not a required element of Section 337. Even though irrelevant, the Masimo W1 is available to consumers in a limited market release, and Apple is marketing the Apple Watch to healthcare

MASIMO 2042
Apple v. Masimo
IPR2024-00241

[redacted]

providers. *See, e.g.*, CX-1289 (video announcing Series 6); Tr. (Mannheimer) at 1022:17-1023:1 ("Apple website, Apple.com/healthcare").

Apple introduced no evidence on its other bold promises from its opening. First, Apple argued Masimo's patents claimed technology of the lowest common denominator, and Apple would never seek patents on such features. Tr. (Apple Opening) at 44:20-21, 51:7-9, 52:25, 53:1-4, 55:1-4. Apple produced no supporting evidence. Instead, the evidence showed Apple filed multiple patents on the very limitations that Apple argued were "old as the hills," years after the Asserted Patents were filed. *Id.* at 53:8. For example, Dr. Paul Mannheimer, tasked with implementing pulse oximetry in the Apple Watch (Tr. (Mannheimer) at 997:2-5), is a named inventor of U.S. Patent No. 10,702,211, which issued on July 7, 2020, and claims priority to July 15, 2016. CX-1569. The '211 patent claims many of the same features of the Asserted Patents, including "a housing having an opening," "a photosensor window positioned within the opening," "an opaque region positioned between and optically isolating," and "a convex surface." *Id.* at 17:3-26. Apple also argued it would "never claim" the Fresnel lens "is a patentable invention." Tr. (Apple Opening) at 57:4-6. But Apple did just that in a 2016 patent filing by several of its witnesses. CX-1806.

Apple promised evidence showing Masimo brought this Investigation for an "improper purpose." Tr. (Apple Opening) at 41:6-7, 42:8-10. Kiani explained Masimo requested this Investigation because the relief is faster than district court, which could take five or six years to issue an injunction. Tr. (Kiani) at 130:12-17. [redacted]. *Id.* at 130:3-8. Apple presented no evidence of any "improper purpose."

MASIMO 2042
Apple v. Masimo
IPR2024-00241

Apple promised the evidence would show it "is a bit of a mystery" as to what happened during the Masimo Watch development "in the years before the amended complaint was filed in July of 2021." Tr. (Apple Opening) at 70:19-21. The evidence revealed no "mystery." Masimo witnesses explained in great detail, along with physical and documentary proof, the development of wrist-worn technologies at Masimo and Cercacor. Tr. (Scruggs) at 394:7-400:2; *see also* Tr. (Al-Ali) at 253:17-278:13, 313:14-321:19; CX-1638 at 2. The only "mystery" is why Apple continues to press this false narrative.

Apple also promised it would "put in evidence" of the Apple Watch Series 0 commercial release, which it relies on for its invalidity defense for the '745 Patent. Tr. (Apple Opening) at 56:21-:57:3. Apple, however, never produced or introduced documentary evidence reflecting its final design or release. Uncorroborated witness testimony about the design is insufficient to invalidate a patent.

Apple's non-infringement arguments ignore the evidence and distort the claims. For the Multi-Detector Patents, Apple overlooks its own patent filings and contorts the claim language to argue that the Accused Products somehow lack a convex protrusion "arranged over" the photodiodes and lack "openings." For the '745 Patent, which itself discloses a microlens, Apple's expert Sarrafzadeh imagined differences in shape that no one else can see. For the '127 Patent, Apple ignores both its documents identifying a "thermal mass" for the Accused Products and its witness testimony confirming that LED operating wavelengths are adjusted based on temperature.

The evidence supports a Section 337 violation and the entry of a limited exclusion order and a cease-and-desist order.

MASIMO 2042
Apple v. Masimo
IPR2024-00241

[redacted]

A. Procedural History

Masimo's complaint, amended on July 12, 2021, asserted violations of Section 337 in the importation into the United States, the sale for importation, and sale within the United States after importation of the Apple Watch Series 6, and any other Apple Watch with the accused light-based physiological monitoring features. The Asserted Patents are U.S. Patent Nos. 10,912,501 ("the '501 Patent"), 10,912,502 ("the '502 Patent"), 10,945,648 ("the '648 Patent"), 10,687,745 ("the '745 Patent"), and 7,761,127 ("the '127 Patent") (collectively, the "Asserted Patents"). The Commission instituted the Investigation on August 13, 2021. Doc. ID 749538; 86 Fed. Reg. 46275 (Aug. 26, 2021). The ALJ held a *Markman* hearing on February 17, 2022.

Masimo moved for partial termination of this Investigation as to certain claims of the Asserted Patents. (Doc. ID 766084, Mot. No. 1276-030; Doc. ID 771023, Mot. No. 1276-043.) On March 23 and May 20, 2022, Initial Determinations issued, granting the motions for partial termination. (Order Nos. 25 and 33.) On April 12 and June 20, 2022, the Commission issued Notices it was not reviewing the initial determinations. (Doc. ID 768023; Doc. ID 772826.).

The table below identifies the asserted claims.

Patent	Asserted Claims
'501 Patent	12
'502 Patent	Infringement Only: 22 Infringement & Domestic Industry: 28
'648 Patent	12, 24, 30
'745 Patent	Infringement Only: 9, 27 Domestic Industry Only: 18
'127 Patent	9

The ALJ held the evidentiary hearing on June 6-10, 2022. The initial determination is currently due by September 16, 2022, with a target date of January 16, 2023. Order No. 6.

MASIMO 2042
Apple v. Masimo
IPR2024-00241

[redacted]

B. The Parties

1. Masimo & Cercacor

a. Masimo Revolutionized Non-Invasive Monitoring

Masimo began in the garage of its founder and current CEO Joe Kiani in 1989. Tr. (Kiani) at 79:25-80:2. Kiani and Mohamed Diab solved a problem the pulse oximetry industry believed was unsolvable—measuring blood oxygen saturation through patient motion. *Id.* at 83:7-84:10, 85:7-16. In 1996, Masimo launched one of Masimo's earliest sensors, the Low-Noise Optical Probe (LNOP). CX-1370 at 4. The Masimo LNOP was protected by U.S. Patent No. 5,638,818 ("the '818 Patent," CX-1586). Tr. (Kiani) at 88:25-89:7. Figure 4 in the '818 Patent, depicted below, shows the configuration of the LNOP. *Id.*

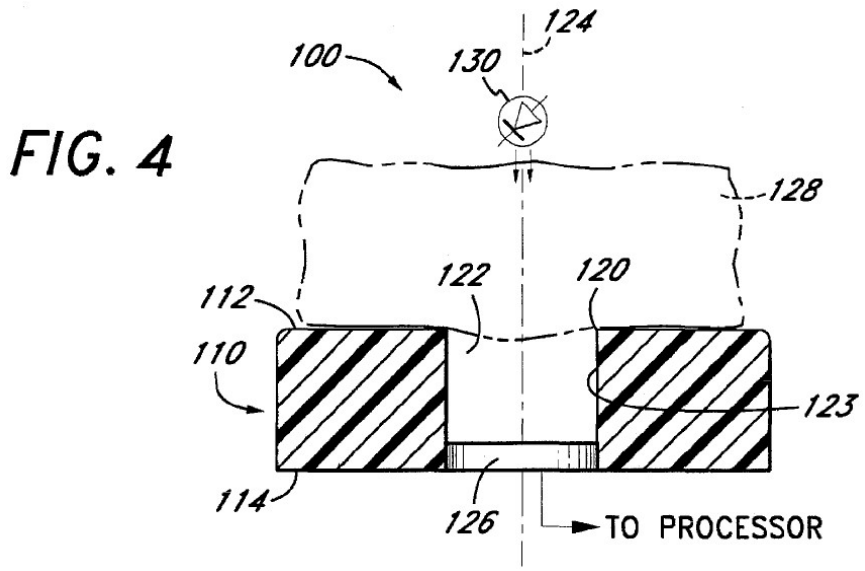

CX-1586 at Fig. 4; *id.* at 6:58-7:7. Figure 4 shows the finger 128 rests on the top 112 of an optical probe 100 containing a chamber 122 with a detector 126 "placed within the chamber 122." *Id.* at 6:58-7:7. When Masimo filed this application, other sensors in the industry "would bring the detector right up to the 128, the patient finger" and keep the detector as planar or flat as possible. Tr. (Kiani) at 90:1-4. In contrast, for Masimo's LNOP, "the photodetector is recessed,

MASIMO 2042
Apple v. Masimo
IPR2024-00241

and it's actually in a cavity where the tissue can sit on underneath where you have these protective dashed line barriers to make sure you don't get light piping but you get the light from the LED to the photodetector." *Id.* at 89:14-18.

Masimo's pioneering technology revolutionized non-invasive monitoring, and courts have found the technology saved thousands of lives and billions of dollars in healthcare costs. *Id.* at 83:18-85:16; *Masimo Corp v. Philips Elec. N. Am. Corp.*, No. 1:09-cv-00080, 2015 WL 2379485, at *19 (D. Del. May 18, 2015). Masimo successfully asserted its intellectual property rights, winning its patent infringement lawsuit against Nellcor, the industry leader at the time. Tr. (Kiani) at 90:21-91:3. Today, Masimo's technology monitors over 200 million patients a year. *Id.* at 91:23-92:1. Numerous publications have confirmed the superiority of Masimo's technology. *Id.* at 87:12-88:2; CX-0777.

b. <u>Masimo Consumer Products</u>

Masimo began launching consumer products once it was able to integrate its medical-grade technology into smaller and lower-power devices. Tr. (Kiani) at 114:3-25. Masimo's technology "used to take a very sophisticated [SHARC] chip from Analog Devices that consumed about 3,000 milliwatts" to perform "signal processing with the adaptive filter." Tr. (Kiani) at 114:16-18. Over time, the chips have gotten better, smaller, and need less power. *Id.* at 114:18-19. Masimo integrated its medical-grade technology into consumer products by reducing power consumption "down to a level where it could be wearable and battery-operated." *Id.* at 149:1-2; *see also id.* at 102:15-103:3, 114:13-25, 147:18-149:20.

In January 2013, at the Las Vegas Consumer Electronics Show (CES), Masimo launched its first consumer product, $iSpO_2$. Tr. (Kiani) at 102:4-5, 103:7-16; CX-1511C. $iSpO_2$ is a "pulse oximeter that connects to the smartphones, like an iPhone or tablet or iPad." Tr. (Kiani)

MASIMO 2042
Apple v. Masimo
IPR2024-00241

[redacted]

at 102:8. Masimo provided two iSpO2 versions: (1) a "finger sensor clip attached to the cable, that goes right to the phones" and (2) "a connector that allows you to plug in 50 different sensors [Masimo] make[s] from neonate to adult, from ear to forehead and finger to it." *Id.* at 102:9-14. iSpO2 included Masimo's medical-grade technology and its launch garnered extensive media coverage, with over 21 articles as of January 10, 2013. *Id.* at 102:15-103:3, 103:23-104:10; CX-1512C (Masimo document collecting articles).

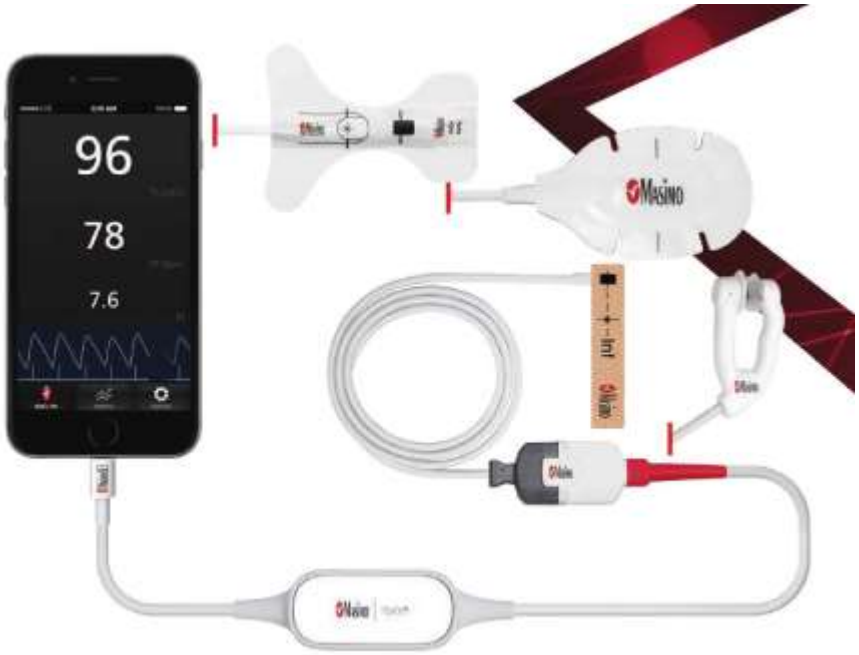

CX-1371 at 50; Tr. (Kiani) at 112:15-16.

Two years later at CES, Masimo launched another consumer product, MightySat. Tr. (Kiani) at 111:25-112:2, 112:17-21. MightySat is a fully-integrated finger clip pulse oximeter with a display, which can wirelessly connect to smartphones. *Id.* at 112:4-7.

MASIMO 2042
Apple v. Masimo
IPR2024-00241

[redacted]

CX-1371 at 50.

c. <u>Masimo's Non-Invasive Monitoring Includes Wrist-Worn Devices</u>

Masimo has been investigating wrist-worn technology for years. In 1998, Masimo spun off certain technologies into a new company, Cercacor (formerly Masimo Labs). Tr. (Kiani) at 93:12-20. Masimo and Cercacor cross-license technologies to each other and collaborate on technology development. *Id.* at 93:23-94:7; CX-1612C (cross-licensing agreement). By 2016, Cercacor developed [redacted] Tr. (Kiani) at 115:1-117:9; CPX-0139C; CPX-0140C; CX-1482C; CX-1483C.

MASIMO 2042
Apple v. Masimo
IPR2024-00241

CPX-0139aC; CPX-0140aC. Tr. (Kiani) at 119:2-3; CX-1493C at 10.

In 2019, Masimo began clinically testing its devices as part of its Masimo Watch project. *See, e.g.*, Tr. (Al-Ali) at 248:24-249:8, 250:3-11, 255:1-256:22; Tr. (Muhsin) at 342:16-20, 342:25-343:7; CX-0370C (clinical study research form). *See, e.g.*, Tr. (Al-Ali) at 272:16-278:4; CX-0378C at 32 (test results of accuracy study); CPX-0019C; CPX-0020C; CPX-0021C; CPX-0022C; CPX-0029C; CPX-0052C; CPX-0054C; CPX-0056C; CPX-0058C; CPX-0065C. Tr. (Al-Ali) at 314:15-318:22.

MASIMO 2042
Apple v. Masimo
IPR2024-00241

As a medical device company concerned with patient safety worldwide, Masimo releases its products in a phased fashion, starting with a premarket release, then limited market release, and finally full market release. Tr. (Kiani) at 124:14-24. Masimo W1 Tr. (Muhsin) at 352:21-353:2, 353:12-23; CX-0682C (purchase order). Masimo W1 Tr. (Muhsin) at 349:10-18.

Masimo has continued its phased launch of the Masimo Watch with the limited consumer release. Tr. (Kiani) at 124:17-21; Tr. (Muhsin) at 353:1-2; RX-1467. Tr. (Muhsin) at 353:6-9. *Id*. at 353:9-11.

2. <u>Apple</u>

By 2012, Apple recognized Masimo as the premier provider of technology to noninvasively measure blood oxygen. CX-1711C at 2. CX-1800C at 3. CX-1800C at 3. Apple recognized Masimo as having technology ” CX-1800C at 2. Apple

[2] Tr. (Land) at 982:9-10.

MASIMO 2042
Apple v. Masimo
IPR2024-00241

considered "Masimo/Cercacor" a CX-1793C at 5, 16.

Apple contacted Masimo in 2013, representing that Tr. (Kiani) at 104:15-16. Tr. (Kiani) at 104:17-18.

CX-1539C at 1 (emphasis in original). Kiani and Paul Jansen, then Masimo's head of marketing, presented to Apple on May 3, 2013. Tr. (Kiani) at 107:1-108:23.

After the meeting, Apple hired Masimo's Chief Medical Officer, Dr. Michael O'Reilly. Tr. (Kiani) at 109:21-110:8. Tr. (Kiani) at 110:3-4. However, Apple continued targeting Masimo and Cercacor engineers. *Id.* at 110:5-8, 111:8-20.

MASIMO 2042
Apple v. Masimo
IPR2024-00241

Id. at 111:10-12.

Id. at 111:12-14; *see also* CX-1615C

CX-1615C.

Tr. (Kiani) at 111:18-19. In 2013, Apple recruited Cercacor's Chief Technology Officer, Marcelo Lamego. *Id.* at 111:21-23. In October 2013, while at Cercacor, Lamego wrote to Cook at 1 a.m. CX-1461 at 5. Lamego claimed he could solve the very difficult "patient equation" for Apple, referencing his "10 years" at Masimo Corp. and Cercacor. *Id*. Rather than rebuffing Lamego's promise as one might expect if the company respected intellectual property, by 10:30 a.m., Apple's executive recruiter was already pursuing Lamego's offer. *Id.* at 7. Apple quickly hired Lamego—a named inventor on four of the Asserted Patents.

Apple continued to recognize Masimo's leading technology throughout development of its Apple Watch.

MASIMO 2042
Apple v. Masimo
IPR2024-00241

[redacted] CX-0285C (Dua) at 55:19-21; *see also id.* at 52:16-55:9, 58:13-59:5, 67:7-68:11, 96:14-97:9, 113:13-115:18; CX-0098C at 7 ([redacted]; CX-0094C at 1 [redacted]); Tr. (Waydo) at 932:19-933:4 ([redacted]

C. <u>Overview of the Technology</u>

Pulse oximetry measures the proportional amount of hemoglobin-carrying oxygen, called arterial oxygen saturation. *See, e.g.*, Tr. (Kiani) at 80:14-19; RX-0035 at 16, 23. Pulse oximeters typically include two light sources, generally light-emitting diodes (LEDs), that transmit red and infrared light into an individual's tissue, and a light detector. *Id.* Some of the transmitted light is absorbed by the tissue and pulsating blood flow. *Id.* Bright red oxygenated blood absorbs light differently than dark red deoxygenated blood. *Id.* The detector measures the light from both wavelengths after it passes through the tissue. RX-0035 at 16-17. The ratio of light detected at the red wavelength compared to light detected at the infrared wavelength indicates the level of oxygen saturation. *Id.*

Because light both transmits through tissue and reflects back after entering tissue, pulse oximetry sensors can operate via transmittance or reflectance. *Id.* at 103-105. For transmittance sensors, the LEDs and detector are on opposite sides of the tissue. *Id.* For reflectance sensors, the LEDs and detector are on the same side. *Id.* Both methods are illustrated below.

MASIMO 2042
Apple v. Masimo
IPR2024-00241

[redacted]

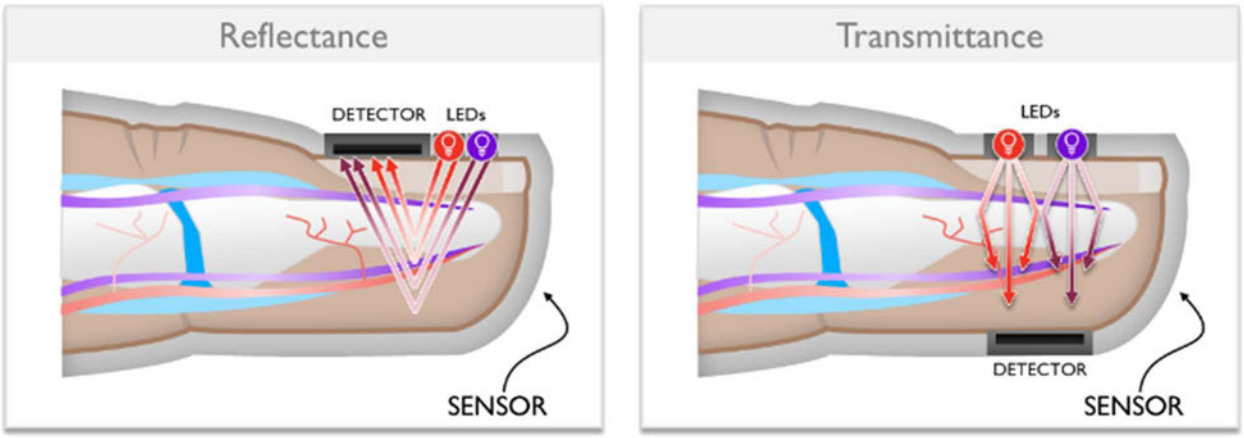

D. <u>The Asserted Patents</u>

Masimo spent decades developing technology for noninvasively measuring physiological parameters. Tr. (Kiani) at 80:10-85:25, 92:29-94:17; CX-1370 at 4-9. Masimo showed the world the possibility of measuring through motion and low perfusion. Tr. (Kiani) at 84:24-85:16. To achieve that breakthrough, Masimo developed advanced signal processing, improved sensor design, and hardware to extract very tiny physiological signals that are obscured by noise. *Id.* at 83:18-84:10, 88:3-90:4, 98:9-99:16. Masimo continued to innovate with new sensor designs and to extract measurements for new non-invasive parameters, including hemoglobin, carbon monoxide, and methemoglobin. *Id.* at 92:24-93:11. Masimo remains the only company to offer these noninvasive measurements today. *Id.* at 95:5-13. As Masimo continued to develop other noninvasive measurements, it found getting the signal very challenging. *Id.* at 98:9-99:7. Any errors in the detected signal, for example from light going from the LEDs directly to the photodetector, causes inaccuracies in the measurement. *Id.* at 100:14-101:5. Masimo patented several of its inventions, which allowed it to extract these small signals, including those presented during this Investigation.

MASIMO 2042
Apple v. Masimo
IPR2024-00241

[redacted]

1. U.S. Patent Nos. 10,912,501, 10,912,502, and 10,945,648

The Multi-Detector Patents share a common specification. JX-0001; JX-0002; JX-0003. These patents claim priority to July 3, 2008. JX-0001 at 2-3; JX-0002 at 2-3; JX-0003 at 2-3.

The Multi-Detector Patents describe and claim inventions by Cercacor engineers relating to user-worn, non-invasive, physiological measurement devices or sensors. Tr. (Kiani) at 97:23-99:7; JX-0001. The patents disclose innovative devices invented while researching how to obtain non-invasive measurements of hemoglobin and glucose. Tr. (Kiani) at 98:9-17. This process involves small, difficult-to-acquire signals. *Id.* The engineers discovered that a protrusion on the sensor pushing into the user's tissue resulted in a stronger signal. *Id.* at 98:18-99:3. Before this discovery, Masimo and Cercacor had used the opposite of such a protrusion on their non-invasive sensors. *Id.* at 99:2-4.

This discovery surprised the inventors, who thought pressing against the tissue would push blood away from the sensor and thereby cause the signal to go away. *Id.* at 99:8-14. Unexpectedly, the inventors found the protrusion actually increased the signal. *Id.* at 99:12-16. The inventors also learned, however, such a protrusion increased light-piping, which is "light that goes from the LED directly to the photodetector, without going through the tissue." *Id.* at 100:14-101:5. Examples of light-piping are shown below with the black arrows:

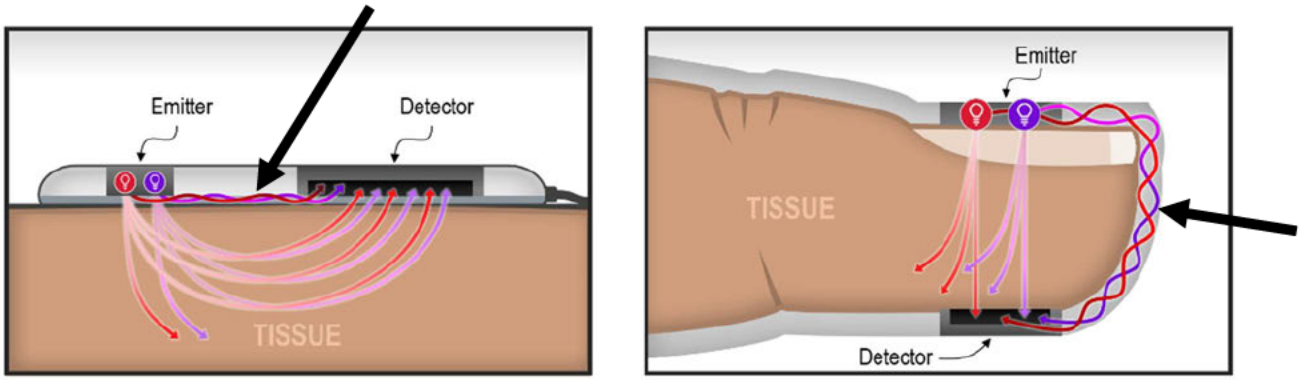

MASIMO 2042
Apple v. Masimo
IPR2024-00241

[redacted]

CDX-0001C.002. Light-piping "causes inaccuracies in the measurement" of the physiological parameter. Tr. (Kiani) at 100:14-101:5. The inventors overcame these issues with optical barriers to avoid or minimize light-piping. *Id.* at 100:4-13; 101:6-15.

For example, light barriers directed the light to the detector so that light would not go from the LED to the detector without first passing through tissue. *Id.* at 25:48-61. The inventors also used opaque material for the protrusion to reduce light noise, including light-piping. *Id.* at 7:65-8:7. Walls and/or a sensor housing also cancel noise by minimizing the amount of light reaching the detectors without passing through the tissue. *Id.* at 22:46-53. The inventors also used windows to direct light from the measurement site to the photodetectors. *Id.* at 22:53-62.

Accordingly, the Multi-Detector Patents explain different pieces of the sensor work together to provide an order-of-magnitude increase in signal strength and greater noise cancellation (including light-piping). JX-0001 at 9:18-23, 20:14-30, 3:13-23, 4:16-27. Specifically, the patents disclose the use of a protrusion comprising a convex surface over a plurality of photodetectors, which provides several different benefits. The protrusion thins out a measurement site on the body, resulting in reduced light attenuation by the measured tissue for the physiological sensor device and improved transmittance. JX-0001 at 21:26-43, FIG. 5. The protrusion also increases the area from which attenuated light can be measured. *Id.* at 7:61-63, 11:21-23.

The inventors also described that their innovative designs could be "located somewhere along a non-dominant arm or a non-dominant hand, e.g., a right-handed person's left arm or a left hand." JX-0001 at 11:45-48; *see, e.g.*, *id.* at 11:53-55; Tr. (Warren) at 1278:3-8. This was a location that experienced pulse oximetry designers viewed as a challenge and did not know if it could be done. Tr. (Mannheimer) at 1012:12-22.

MASIMO 2042
Apple v. Masimo
IPR2024-00241

[redacted]

2. U.S. Patent No. 10,687,745

The ’745 Patent, entitled “Physiological Monitoring Devices, Systems, and Methods,” originally filed in 2015, is the result of Masimo’s research and development to further improve non-invasive measurement accuracy. JX-0009 at 1:23-27. These improvements were beyond the already-revolutionary improvements Masimo brought to the industry in the 1990s. The inventor of the ’745 Patent, Ammar Al-Ali, started at Masimo in 1995 as a software engineer. He worked on Masimo’s oxygen saturation algorithm, and later managed technology development. Tr. (Al-Ali) at 248:3-23. [redacted] *Id.* at 248:24-249:8. Al-Ali sought to improve the measurement by maximizing the amount of light that interacted with the tissue while minimizing the light that did not interact with the tissue as intended. *Id.* at 326:11-327:12. By shaping the way the light interacts with the tissue and how the light is received by the detector, he provided a more accurate design with a better signal-to-noise ratio. *Id*. As a result of this work, he filed the original provisional application for the ’745 Patent in 2015. *Id.* at 249:9-250:2; JX-0009. [redacted]

The ’745 Patent is directed to devices and methods for the non-invasive measurement of physiological parameters such as blood oxygen saturation, including measuring from more difficult measurement sites like the wrist. JX-0009 at 2:40-3:4; 10:40-51. Consistent with Masimo’s history of extracting tiny signals obscured by noise, some of Al-Ali’s enhancements are reflected in his patent. *Id*. at 7:4-62; 10:40-11:66; Figs. 7A and 7B; 8:54-9:10.

The ’745 Patent explains many sources of measurement error introduced to pulse oximetry systems, one of those being the way the light scatters as the photons pass through the

MASIMO 2042
Apple v. Masimo
IPR2024-00241

[redacted]

patient's tissue. JX-0009 at 2:28-37. This problem results from traditional pulse oximetry applying 2D analytical models to 3D tissue, where the light is emitted from the LEDs, with negligible dimensions, basically considered as a "point." JX-0009 at 5:41–50. The '745 Patent explains that this approach of irradiating with a point optical source was believed to reduce variability, but due to what Al-Ali called "multiple scattering," this believed reduction is not realized in practice. *Id*. at 5:65-6:20.

One of the innovations the '745 Patent discloses, to improve accuracy, is irradiating "a larger volume of tissue." JX-0009 at 6:58-64. One way to accomplish this is to use optical transmission materials configured to improve the light interaction with the tissue. *Id*. at 7:40-62; 10:65-11:9. This leads to more accurate oxygen saturation measurements. *Id*. at 6:64-7:3. The innovations also include specific configurations that also further decreased light piping. *Id*. at 8:54-9:10; 7:16-29. The innovation also involves optical transmission diffusers to configure the light from the LEDs, preferably in a manner to change the shape of light to improve the interaction with the relevant tissue. *See, e.g.*, *id.* at 3:5-14, 4:16-28, 6:58-7:3; 7:40-62; 7:63-8:19; 10:65-11:9; *see also* Tr. (Al-Ali) at 248:24-250:2; 326:3-328:7. The patent discloses using "microlens-based" engineered diffusers to deliver efficient illumination. JX-0009 at 3:5-8. The patent also describes light blocks to inhibit LED light from reaching the detectors prior to attenuation by tissue. *See, e.g., id.* at 10:49-51, 11:10-20, FIGS. 7A-7B.

The combination of features in the '745 Patent work together to increase the signal-to-noise ratio, which improves the accuracy of measurements. For example, the '745 Patent explains that by diffusing the emitted light to a larger volume of tissue, a larger sample size of light reflected by the tissue can be measured, leading to a more accurate measurement of oxygen saturation. *Id.* at 6:55-7:3. The '745 Patent also explains improvements from the use of a dark-

MASIMO 2042
Apple v. Masimo
IPR2024-00241

colored coating. *Id.* at 8:54-9:7. The dark-colored coating helps alleviate light piping. *Id.* In addition, during operation, emitted light can reflect off the tissue measurement site to other portions of the device. *Id.* at 8:59-66. This issue, referred to as multiple scattering, can also impact accuracy. *Id.* at 8:66-9:3. The dark-colored coating improves the multiple scattering problem. *Id.* at 9:4-10.

The '745 Patent teaches measuring a user's blood oxygen from the wrist in a reflectance arrangement. *See, e.g.*, *id.* at 10:40-51, FIGS. 7A-7B. The claimed inventions of the '745 Patent provide novel combinations of features allowing improved measurement of a user's physiological parameters, such as SpO_2, at the user's wrist.

3. <u>U.S. Patent No. 7,761,127</u>

Masimo's research and development of a light-based sensor to non-invasively measure carboxyhemoglobin and other parameters led to the '127 Patent. Tr. (Diab) at 191:11-17. No company had been able to make that measurement. *Id*. at 211:10-12. Non-invasive measurement of carboxyhemoglobin allows early detection and treatment of carbon monoxide poisoning. *Id.* at 191:22-192:6.

After years of researching the feasibility of non-invasively measuring carboxyhemoglobin (HbCO), Masimo concluded it could measure carboxyhemoglobin, methemoglobin, and total hemoglobin. *Id*. at 192:11-23. In 2003, Masimo could measure HbCO with an Tr. (Diab) at 194:25-196:1; CX-0818C. Tr. (Diab) at 196:7-12.

Diab cared deeply about improving accuracy. *Id.* at 197:6-12. He discovered error from one of the LEDs operating at a wavelength different from its nominal LED wavelength, due to temperature. *Id.* at 197:13-198:20.

MASIMO 2042
Apple v. Masimo
IPR2024-00241

[redacted]

[redacted].

Id. at 198:21-199:11. [redacted]

For example, [redacted]

[redacted]

Id. at 201:2-202:20; CX-0342C at 6 (annotated). He also [redacted]

MASIMO 2042
Apple v. Masimo
IPR2024-00241

CX-0342C at 30 (annotated); Tr. (Diab) at 201:21-203:6. Diab explained:

Id. Masimo

Tr. (Diab) at 203:7-204:1.

MASIMO 2042
Apple v. Masimo
IPR2024-00241

[redacted]

[redacted] *Id.* at 204:2-11. This improvement allowed the rainbow® sensors to "go out to market" and be commercially successful. *Id.*

The '127 Patent describes and claims Masimo's solution for estimating multiple LEDs' operating wavelengths to correct for wavelength shift with a temperature measurement of a thermal mass. As explained by Diab and Jack Goldberg (an expert in physiological monitoring technologies (Tr. at 614:3-11; CX-0330)), the '127 Patent's Figure 12 (simplified) illustrates basic aspects of the invention of Claim 9.

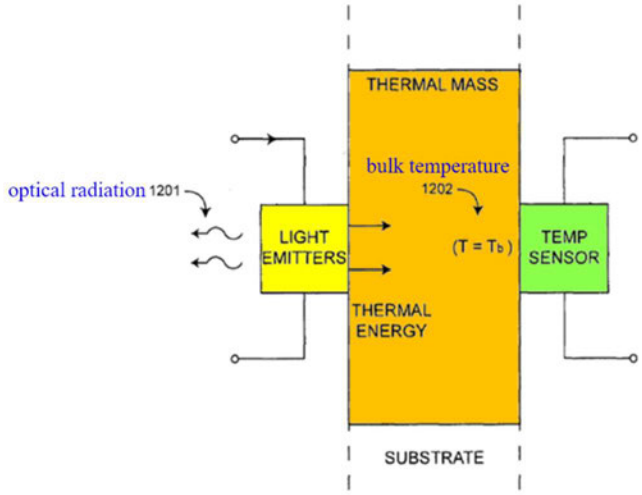

FIG. 12

Tr. (Diab) at 207:4-17; Tr. (Goldberg) at 614:12-615:4; CDX-0013C.004 (citing JX-0007). Claim 9 requires the temperature sensor comprises a thermistor. JX-0007, Claim 9.

Claim 9 includes a thermal mass disposed within the substrate thermally coupled to the LEDs and the thermistor. The thermistor measures one temperature, called a "bulk temperature for the thermal mass," and the sensor uses it to estimate the operating wavelengths of all LEDs. JX-0007 at 10:22-48. The '127 Patent explains the thermal mass stabilizes the bulk temperature "so that the thermistor measurement of bulk temperature is meaningful." *Id.* at 10:67-11:4. In the context of the '127 Patent, the bulk temperature is meaningful because it allows reliable

MASIMO 2042
Apple v. Masimo
IPR2024-00241

estimation of the LED operating wavelengths. *Id.* at 10:32-39, Claim 7; Tr. (Goldberg) at 646:16-25. The invention allows the measurement of HbCO, "oxygen saturation[,] and pulse rate with increased accuracy or robustness." JX-0007 at 5:5-22.

E. The Products at Issue

1. Masimo's Domestic Industry Products

Masimo developed all the domestic industry articles in the United States. Tr. (Kiani) at 119:9-12. The domestic industry articles for the '501, '502, '648, and '745 Patents are Masimo Watches shown in the demonstrative below from Stephen Scruggs, who was "responsible for all of the mechanical aspects of the design." Tr. (Scruggs) at 392: 9-13.

CDX-0005C.002 (citing CPX-0021aC; CPX-0029aC; CPX-0052aC; CPX-0058aC; CPX-0019aC; CPX-0020aC; CPX-0065aC; CPX-0155aC). Scruggs confirmed references to "Masimo W1 Watches" include both CPX-0146C and CPX-0155C. Tr. (Scruggs) at 431:14-16.

MASIMO 2042
Apple v. Masimo
IPR2024-00241

a. **Masimo Watch**

i. **Masimo and Cercacor's Wrist Pulse Oximetry Development**

CX-1482C at 4; Tr. (Kiani) at 116:8-9; CPX-0139C (photograph at CPX-0139aC).

Tr. (Kiani) at 117: 8-9; CPX-0140C.

MASIMO 2042
Apple v. Masimo
IPR2024-00241

CX-1483C. The photograph below shows the prototype Kiani displayed:

CPX-0140aC at 1; *see also* CX-1520C.

By Al-Ali Tr. (Al-Ali) at 248:24–250:2, 328:8-16. He also filed a patent application in

MASIMO 2042
Apple v. Masimo
IPR2024-00241

July 2015, a parent to the '745 Patent. *Id*. at 249:9-23. He resumed the project Tr. (Muhsin) at 342:17. Masimo and Cercacor developed Tr. (Muhsin) at 343: 3-4. The following slide shows Tr. (Kiani) at 122: 24-25.

CX-0364C at 19; *see also* CX-0691.

In late 2019, Al-Ali's team worked on Tr. (Al-Ali) at 256:23-259:5; CX-0352C; CX-0355C; CX-0356C. The Masimo measured pulse oximetry parameters, CX-0370C; Tr. (Al-Ali) at 253:25-256:22. Tr. (Al-Ali) at 259:6-260:10; CX-0357C. Tr. (Al-Ali) at 260:11-264:13, 270:1-22; CX-0375C; CPX-0052C; CX-0378C. Tr. (Al-Ali) at 272:16-275:12; CX-

MASIMO 2042
Apple v. Masimo
IPR2024-00241

0378C at 32. Tr. (Al-Ali) at 274:15-275:33. Arms is the industry method for measuring pulse oximetry accuracy. Tr. (Al-Ali) at 274:15-24; CX-0273C (Amor) at 54:8-55:1. Tr. (Al-Ali) at 265:15-269:25; CPX-0054C; CPX-0054aC; CPX-0056C; CPX-0056aC.

ii. <u>Masimo's Patent Practicing Articles</u>

(a) CPX-0021C (

The Masimo Watch, exemplified by CPX-0021C (photograph CPX-0021aC), Tr. (Scruggs) at 394:14-16, and Tr. (Scruggs) at 394:18. Scruggs provided detailed descriptions of its features and , including SpO_2. Tr. (Scruggs) at 402:24-403:7, 401:10-11; 400:9-16, 403:21-404:2, 413:24-414:11. He also demonstrated this watch to both sides' experts. *Id.* at 415:4-9; CX-0836C at 5; RX-0260C.

Apple claimed . But Scruggs explained that, Tr. (Scruggs) at 474:24-475:4.

Masimo *Id.* at 475:8-15; Tr. (Al-Ali) at 250:15-255:18; *see also id.* at 255:19-256:22; CX-0370C CPX-0022C; CPX-0022aC.

MASIMO 2042
Apple v. Masimo
IPR2024-00241

Scruggs introduced numerous documents reflecting the design of CPX-0021C including CX-0656C, CPX-0014a, CPX-0014, CX-0679, CX-0836C, CX-0600C, CX-1132C, and CX-0474C. Tr. (Scruggs) at 413:17-23, 414:4-15, 414:23-415:3, 415:16-23, 415:24-416:12.

(b) CPX-0029C

The Masimo Watch with the is exemplified by CPX-0029C and its photograph CPX-0029aC. Tr. (Scruggs) at 395:7-24. *id.* at 395:14-15. Scruggs described the features of this watch *Id.* at 404:10-19, 404:12, 404:20-21, 404:22-24, 405:1-7. He also demonstrated this watch to both sides' experts. RX-0263C.

Scruggs introduced numerous documents reflecting the design of CPX-0029C, including CX-0658C, CX-0605C, CX-1137C, and CX-0704C. Tr. (Scruggs) at 416:13-17, 416:20-417:11.

MASIMO 2042
Apple v. Masimo
IPR2024-00241

Warren admitted the way to determine the accuracy of a device is to perform an Arms calculation. Tr. (Warren) at 1277:12-20. He performed no such calculation. *Id.* Tr. at 295:9-14.

(c) CPX-0052C

The Masimo Watch with the , exemplified by CPX-0052C (photograph at CPX-0052aC), was Tr. (Scruggs) at 405:16-18. *Id.* at 396:10-11. Scruggs described the features of this watch *Id.* at 405:12-406:3, 406:6-11, 406:20-22. He also demonstrated operation of CPX-0052C to both sides' experts, *Id.* at 418:2-7; 419:3-11; CX-0836C at 4 (below).

[3]

MASIMO 2042
Apple v. Masimo
IPR2024-00241

Scruggs testified the s

Tr. (Scruggs) at 476:10-477:1.

Scruggs introduced numerous exhibits reflecting the design of CPX-0052C including CX-0661C, CX-0813C, CX-0836C, CPX-0012C, CPX-0012aC, CPX-0013C, CPX-0013aC, CX-0473C, CX-0591C, CX-0701C, CX-0395C, CX-1111C. Tr. (Scruggs) at 417:11-418:7, 406:12-22, 418:11-419:2, 419:15-420:8, 420:19-22.

(d) CPX-0058C

The Masimo Watch with the , exemplified by CPX-0058C (photograph at CPX-0058aC), Tr. (Scruggs) at 397:8-9.

Tr. (Scruggs) at 397:9-11. *Id.* at 397:24. Scruggs described its features and operation. *Id.* at 397:8-11, 407:2-18, 407:25-408:4, 408:19. He also explained all *Id.* at 476:1-4.

Scruggs demonstrated operation of CPX-0058C. RX-0267C. This included a demonstration working *Id.* at 408:9-10. *Id.* at 409:15-20.

MASIMO 2042
Apple v. Masimo
IPR2024-00241

Scruggs introduced numerous exhibits reflecting the design of CPX-0058C including CX-0665C, CX-0666C, CX-0815C, CPX-0141aC, CX-0389C, CX-0536C, CX-0550C, CX-1124C, CX-0710C, and CX-0709C. Tr. (Scruggs) at 421:1-20, 422:6-423:22.

(e) CPX-0019C, CPX-0020C, CPX-0065C

The Masimo Watches with the , exemplified by CPX-0019C, CPX-0020C, and CPX-0065C, Tr. (Scruggs) at 409:21-25; 410:1-4. These watches Tr. (Scruggs) at 398:22-23. Scruggs described the features and operation of these watches. Tr. (Scruggs) at 408:23-409:14, 421:14-422:5. Scruggs demonstrated operation of a Masimo Watch to both sides' technical experts. RX-0268C.

Scruggs introduced numerous exhibits reflecting the design of CPX-0019C, CPX-0020C, and CPX-0065C, including CX-0652C, CX-0653C, CX-0814C, CX-0654C, CX-0655C, CX-1415C, CX-0675C, CX-0676C, CX-0812C, CX-0594C, CX-1129C, CX-0551C, CX-1125C, CX-0390C, CX-0705C. Tr. (Scruggs) at 423:23-425:6, 425:15-23, 426:6-427:11.

Al-Ali confirmed CX-1634C are Tr. (Al-Ali) at 313:14-314:7. Tr. (Al-Ali) at 314:15-318:22; CX-0494C.

MASIMO 2042
Apple v. Masimo
IPR2024-00241

[redacted]

(f) <u>Masimo W1</u> [redacted]

Masimo built the W1 Watch, as exemplified by CPX-0146C, CPX-0155C (photographs at CPX-0146aC and CPX-0155aC), [redacted] Tr. (Scruggs) at 399:1-3; Tr. (Scruggs) at 410:5-14; Tr. (Muhsin) at 350:11-22. Masimo COO Bilal Muhsin introduced an additional example of the W1 watch. Tr. (Muhsin) at 350:23-351:2, 351:17-352:4; CPX-0157C (CPX-0157aC); *see also* CPX-156aC. The W1 is Masimo's production version of the watch. Tr. (Scruggs) at 399:4-7. [redacted] *Id.* Scruggs described the features and operation of this watch. *Id.* at 410:9-24; 401:10-13; 410:25-411:2, 428:8-432:9.

Scruggs introduced numerous exhibits reflecting the design of the W1, including CPX-0146C, CX-0772C, CX-0784C, CX-0790C, CX-0685C, CX-1185C, CX-0806C, CX-0595C, CX-0392C, CX-0805C, CX-0801C, CX-0593C, CX-1128C. Tr. (Scruggs) at 428:8-432:9, 432:13-21.

As explained above with corresponding citations to the evidence, [redacted]. Tr. (Al-Ali) at 274:15-275:3; CX-0378C at 32; CX-0494C. On the other hand, Apple's expert Warren did no Arms calculations on the clinical accuracy of any Masimo watch. Tr. (Warren) at 1277:12-20.

MASIMO 2042
Apple v. Masimo
IPR2024-00241

[redacted]

b. <u>rainbow® Sensors</u>

The domestic industry articles for the '127 patent are Masimo's rainbow® sensors.[4] The first rainbow® product released was the Rad-57 with a rainbow® sensor, shown below.

CX-0388C at 60; Tr. (Diab) at 211:7-12. Diab confirmed all rainbow® sensors use multiple LEDs, a thermal mass, and a thermistor, to measure physiological parameters such as carboxyhemoglobin. Tr. (Diab) at 210:13-212:20.

[4] Masimo's references to "rainbow® sensors" exclude two models not related to this case. Tr. (Diab) at 210:13-19.

MASIMO 2042
Apple v. Masimo
IPR2024-00241

[redacted]

2. Accused Products

a. Apple Watch Series 6 and 7

Masimo accused the Apple Watch Series 6 (model nos. A2291-A2294, "Series 6") and Apple Watch Series 7 (model nos. A2473-A2475 and A2477, "Series 7"), and Next-Generation Apple Watches (collectively, the "Accused Products") of infringing the Asserted Claims, as summarized in the table below.[5]

Accused Products	Patent	Asserted Claims
Apple Watch Series 6 Apple Watch Series 7 Next-Generation Apple Watches	'501	12
	'502	22, 28
	'648	12, 24, 30
	'745	9, 27
	'127	9

The Accused Products are user-worn devices with a "Blood Oxygen" feature configured to "measure the oxygen level of your blood." *See, e.g.*, CX-0010. Apple offers the Accused Products in small and large sizes, [redacted] CX-1226C at 9-12; CX-0281C (Block) at 76:18-77:5; Doc. ID 770692 at 2.

The parties agree [redacted] for the purposes of infringement. Doc. ID 770692 (Joint Stipulation of Facts) at 2. *See also* CX-0281C (Block) at 77:6-15; CX-1200C at 2-6. During the evidentiary hearing, the parties' experts [redacted] *See, e.g.*, Tr. (Sarrafzadeh) at 1075:2-4 ([redacted]

[5] [redacted] *See, e.g.*, CX-0281C (Block) at 91:11-12, 146:15-17.

MASIMO 2042
Apple v. Masimo
IPR2024-00241

Tr. (Warren) at 1249:18-12:53-3 (same non-infringement positions for Series 6 and 7); Tr. (Goldberg) at 615:15-616:3; Tr. (Madisetti) at 676:20-25. CX-1227C at 5-6.

CX-1200C at 6. CX-1200C at 2-6.

Accordingly, Doc. ID 770692 (Joint Stipulation of Facts).

CX-1451 at 1:49; Tr. (Madisetti) at 679:4-9.

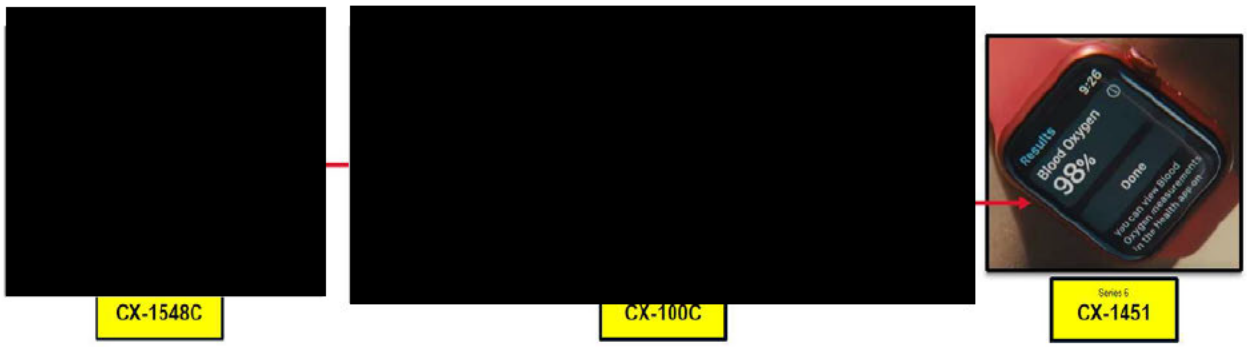

MASIMO 2042
Apple v. Masimo
IPR2024-00241

[redacted]

CDX-0011C.009.

b. Future Apple Watch Products

[redacted]

II. JURISDICTION

Apple's Pre-Hearing Brief "does not dispute that the Commission has jurisdiction over the accused Apple Watch Series 6 and Series 7 products, which have been imported into the United States," (Doc. ID 770874 at 7) and Apple did not dispute the Commission's jurisdiction during the evidentiary hearing. The Commission also has jurisdiction over the Next-Generation Apple Watches.

A. Standing

Masimo has standing to bring its Complaint. Masimo Corp. owns the '501, '502, '648, and '745 Patents and has certain exclusive rights to the '127 Patent. CX-1266, CX-1267, CX-1268, CX-1270 (assignments for '745, '501, '502, and '648 Patents, respectively); CX-1612C (cross-licensing agreement); Tr. (Kiani) at 93:23-94:7. Cercacor owns the '127 Patent and has

MASIMO 2042
Apple v. Masimo
IPR2024-00241

certain exclusive rights to the ’501, ’502, ’648, and ’745 Patents. CX-1269 (assignment for ’127 Patent); CX-1612C; Tr. (Diab) at 205:6-15; Tr. (Kiani) at 93:23-94:7.

B. Subject Matter Jurisdiction

Apple did not dispute subject matter jurisdiction during the evidentiary hearing. The Commission has subject matter jurisdiction for a cause of action under Section 337 of the Tariff Act. *See Certain Light-Emitting Diode Prods.*, Inv. No. 337-TA-1213, Doc. ID 750242, I.D. at 16 (Aug. 17, 2021) (Cheney, CALJ), *rev’d in part and aff’d*, Comm’n Op. (Jan. 14, 2022). Masimo has alleged a Section 337 claim that Apple imports, and sells after importation, certain products and components thereof, and certain models of the Apple Watch containing light-based pulse oximetry functionality, that infringe the Asserted Patents. *See, e.g.* Compl., Doc. ID 746514, ¶¶ 2-3, 39-41, 78-85. Thus, the Commission has subject matter jurisdiction.

C. Personal Jurisdiction

Apple did not dispute personal jurisdiction during the evidentiary hearing. Masimo consented to the personal jurisdiction of the Commission by filing its Complaint and participating in this Investigation. *See Certain Toner Cartridges*, Inv. No. 337-TA-1174, Doc. ID 716848, I.D. at 34-35 (Jul. 23, 2020), Doc. ID 719096, Comm’n Notice (Sept. 8, 2020). Apple consented to the Commission’s personal jurisdiction by, for example, responding to the Complaint, participating in discovery, participating in the hearing, and not disputing the Commission’s jurisdiction over it.

D. *In rem* Jurisdiction and Importation

MASIMO 2042
Apple v. Masimo
IPR2024-00241

[redacted] *Id.* The importation requirement of 19 U.S.C. §§ 1337(a)(l)(A)-(B) is satisfied by importation for any purpose, including sale, offer for sale, testing, promotion, or sale after importation. *See Certain Mobile Elec. Devices*, Inv. No. 337-TA-1093, I.D., 2019 WL 2058009, at *25 (Mar. 26, 2019) (finding *in-rem* jurisdiction over next-generation iPhones because Apple imported prototypes).

III. '501, '502, AND '648 PATENTS

Apple infringes, and the Masimo [redacted] and W1 satisfy, five claims from the Multi-Detector Patents:

- '501 Patent Claim 12,
- '502 Patent Claim 28,
- '648 Patent Claims 12, 24, and 30.

Apple also infringes '502 Patent Claim 22.

A. Level of Ordinary Skill in the Art

The parties stipulated to the following definition of a person of ordinary skill in the art ("POSITA") for the Multi-Detector Patents:

> [A] person with a working knowledge of physiological monitoring technologies. The person would have had a Bachelor of Science degree in an academic discipline emphasizing the design of electrical, computer, or software technologies, in combination with training or at least one to two years of related

MASIMO 2042
Apple v. Masimo
IPR2024-00241

[redacted]

> work experience with capture and processing of data or information, including but not limited to physiological monitoring technologies. Alternatively, the person could have also had a Master of Science degree in a relevant academic discipline with less than a year of related work experience in the same discipline.

Doc. ID. 770692 ¶10.

B. Claim Construction

Apple raised two new constructions for the phrases: (1) "arranged over"/"positioned over"/"above" and (2) "openings"/"through the protrusion." Tr. (Warren) at 1249:10-1253:3; RDX-0008.137-8.143; Apple PHB at 7-16. Apple never identified these phrases during claim construction, but rested its entire noninfringement defense on them. Apple's construction of "arranged over"/"positioned over"/"above" incorrectly assumes the patent specified the positioning of components relative to the Earth, and not relative to each other. And Apple's construction for "openings"/"through the protrusion" ignores the patents are concerned with the passage of light, and not physical or tangible objects. Masimo addresses the new claim construction below.

1. "Arranged Over"/"Positioned Over"/"Above"

The six Asserted Claims each recite a user-worn device with various structural elements including a protrusion comprising a convex surface. Five of the Asserted Claims also recite either a protrusion or openings in the protrusion "arranged over"/"positioned over"/"above" another structure of the user worn device:

- "a protrusion ***arranged over*** the interior surface, the protrusion comprising a convex surface" ('501 **[1C]**) and "a plurality of openings extending through the protrusion and ***positioned over*** the three photodiodes" ('501 **[1D]**);

MASIMO 2042
Apple v. Masimo
IPR2024-00241

[redacted]

- "a protrusion comprising a convex surface including separate openings extending through the protrusion and lined with opaque material, each opening ***positioned over*** a different one of the four photodiodes" ('502 **[19C]**);
- "a protrusion arranged ***above*** the interior surface, the protrusion comprising: a convex surface" ('502 **[28E]**);
- "a protrusion comprising a convex surface and" ('648 **[20C]**) "a plurality of through holes, each through hole including a window and ***arranged over*** a different one of the at least four photodiodes" ('648 **[20D]**).

'648 Claim 12 does not recite "arranged over"/"positioned over"/"above," and instead it recites "aligned with." Thus, Apple's new claim-construction and noninfringement arguments are inapplicable to this claim.

The patent makes clear the "arranged over"/"positioned over"/"above" language refers to the configuration of features of the device relative to each other, not to the position of the device relative to the Earth. For example, the patent shows that the protrusion is arranged over the photodiodes and their interior surface by extending across that surface. *See, e.g.*, JX-0001 at FIGS. 3C, 3E, 4C, 7B. The surrounding language of '501 Claim 12 confirms this meaning. For example, **[1C]** and **[1D]** specify "the protrusion comprising a convex surface and a plurality of openings … and ***positioned over*** the three photodiodes." '501 **[12]** continues "wherein the convex surface of the protrusion is an outermost surface configured to contact the tissue of the user and conform the tissue into a convex shape." The claim itself therefore specifies the position of "over" by reciting that the protrusion covers multiple photodiodes and contacts the user's skin.

MASIMO 2042
Apple v. Masimo
IPR2024-00241

The other Multi-Detector Patent claims recite similar positions of the components relative to one another and to the user's tissue:

- "four photodiodes … configured to receive light … attenuated by tissue of the user" ('502 **[19B]**) and "each opening positioned over a different one of the four photodiodes" ('502 **[19C]**)
- "four photodiodes arranged in a quadrant configuration on an interior surface … configured to receive light after at least a portion of the light has been attenuated by tissue of the user" ('502 **[28C]**) and "a protrusion arranged above the interior surface" ('502 **[28E]**)
- "at least four photodiodes … arranged to capture light at different quadrants of tissue of a user" ('648 **[20B]**) and "a plurality of through holes, each through hole including a window and arranged over a different one of the at least four photodiodes" ('502 **[20D]**).

The claimed "configured to" language refers to this structural design of the "user-worn device." Nothing in the claims, specification or prosecution history requires a position of components relative to the Earth.

Madisetti, an expert in the field of physiological monitoring technologies (Tr. (Madisetti) at 674:9-12; CX-0329), explained a POSITA would understand the claimed "protrusion, openings, and through holes are over the photodiodes and interior surface regardless of orientation when in use." Tr. (Madisetti) at 700:15-25. As Madisetti described:

> [I]f I put a Band-Aid on a scratch on my hand, for example, the Band-Aid is over the scratch, and the Band-Aid is always over the scratch [ir]respective of the orientation of my hand. So that's how one of ordinary skill in the art would understand the use of the term "over" in some of the claims that are asserted.

Id. at 701:12-18.

MASIMO 2042
Apple v. Masimo
IPR2024-00241

Apple argues "arranged over"/"positioned over"/"above" requires a "positional element" relative to the Earth when the device performs the measurement. Specifically, Apple argues the "protrusion needs to be arranged over the interior surface" ***when*** the Accused Products are "configured to noninvasively measure physiological parameters" and ***when*** the one or more processors are "configured to … calculate a measurement of the physiological parameter of the user." Tr. (Warren) at 1249:18-1250:10. But the phrase "configured to" in the claims refers to the design of the product, not any orientation of components relative to the Earth or its orientation during use. *See, e.g.*, *Certain High-Density Fiber Optic Equipment*, Inv. No. 337-TA-1194, Doc. ID 740348, Final I.D. at 66 (Mar. 23, 2021) ("*In re Giannelli*, 739 F.3d 1375 (Fed. Cir. 2014) … links the phrase 'configured to' to the design of a product, not its actual use.").

The specification confirms positional words such as "above" and "over" have a meaning relative to other components, not vertically stacked with reference to Earth's gravity. It describes small, wearable devices whose orientations are not fixed. For example, the specification describes a "conductive material 733" as being "***over*** the surface of the glass layer 731." JX-0001 at 27:59-62. Those components are shown in FIGS. 7A and 8B:

MASIMO 2042
Apple v. Masimo
IPR2024-00241

[redacted]

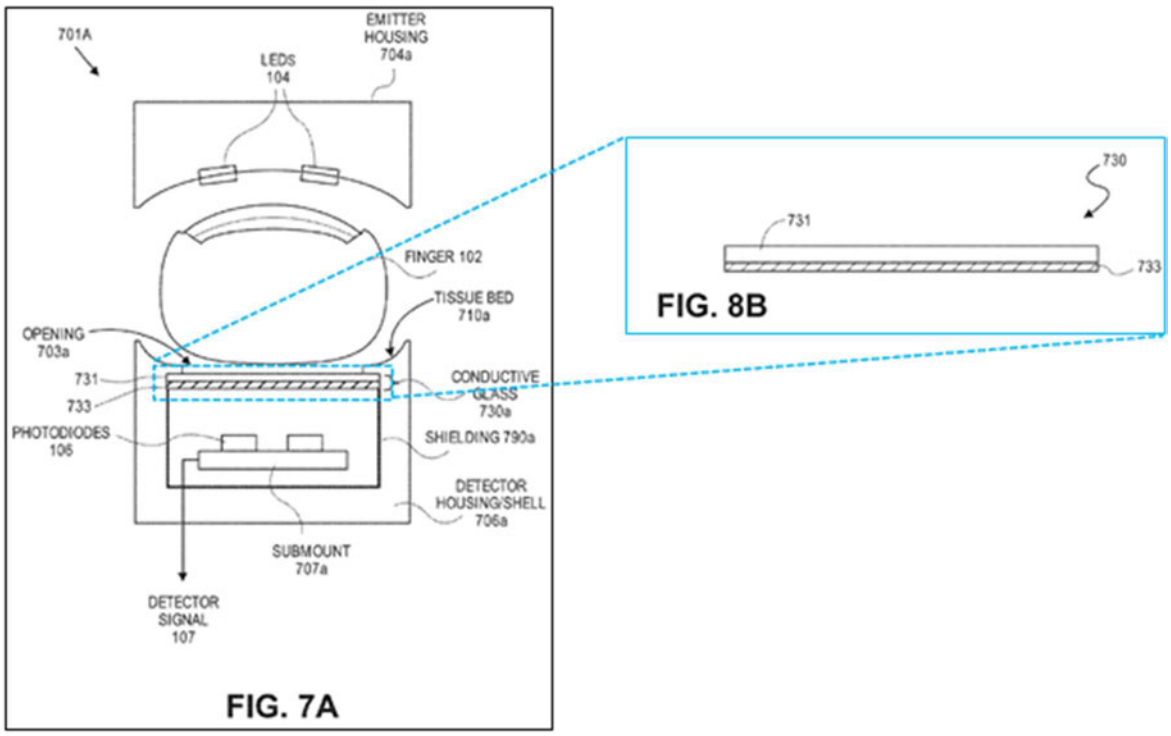

Id. at FIGS. 7A, 8B. As shown in these figures, material 733 is vertically below, ***not* vertically above,** item 731 in the associated figures, yet it is described as "over" 731. *Id.* at 27:59-62, FIGS. 7A-7B, 8A-8C. This use of "over" is consistent with Madisetti's testimony that a POSITA would understand "over" and "above" to reference a position between the optical elements and the skin, regardless of a device's orientation in use. *See* Tr. (Madisetti) at 700:15-25.

Apple's own watch patents confirm the common understanding of "over" in this context as not limited to "vertically above" with respect to gravity. Dr. Ueyn Block, Apple's corporate representative for the Accused Products' hardware, and Dr. Vivek Venugopal, another Apple engineer, applied for a patent describing an Apple Watch-like device. CX-0118 at FIGS. 1C, 2A, 5:45-56. Their patent, consistent with Madisetti's explanation of "over," describes "the convex regions of the one or more protrusions may be disposed ***over*** the light paths of the light emitter(s) and/or light sensor(s)." *Id.* at 30:6-9, FIGS. 1C, 2A; CX-0281C (Block) at 281:8-

MASIMO 2042
Apple v. Masimo
IPR2024-00241

282:11, 283:1-6. The specification explains, "For example, a back surface may comprise a first semi-circular protrusion that extends ***over*** the portions of the back surface that include a first subset of the cavities and/or corresponding optical openings …." CX-0118 at 32:17-23. That patent also states "FIG. 22A depicts … a protrusion 2202 disposed ***over*** an optical opening 2204" and optical component 2208. *Id.* at 35:38-55, FIG. 22A.

Another Apple patent publication (CX-0103) listing Block, Venugopal, Mannheimer, and Land as inventors describes "concepts that are very similar to the Series 6 Apple Watch." CX-0281C (Block) at 111:15-21. This publication is also consistent with Madisetti's opinions, explaining that "windows 120 ***over*** the detectors may be inset within the back cover 107." CX-0103 ¶[0065].

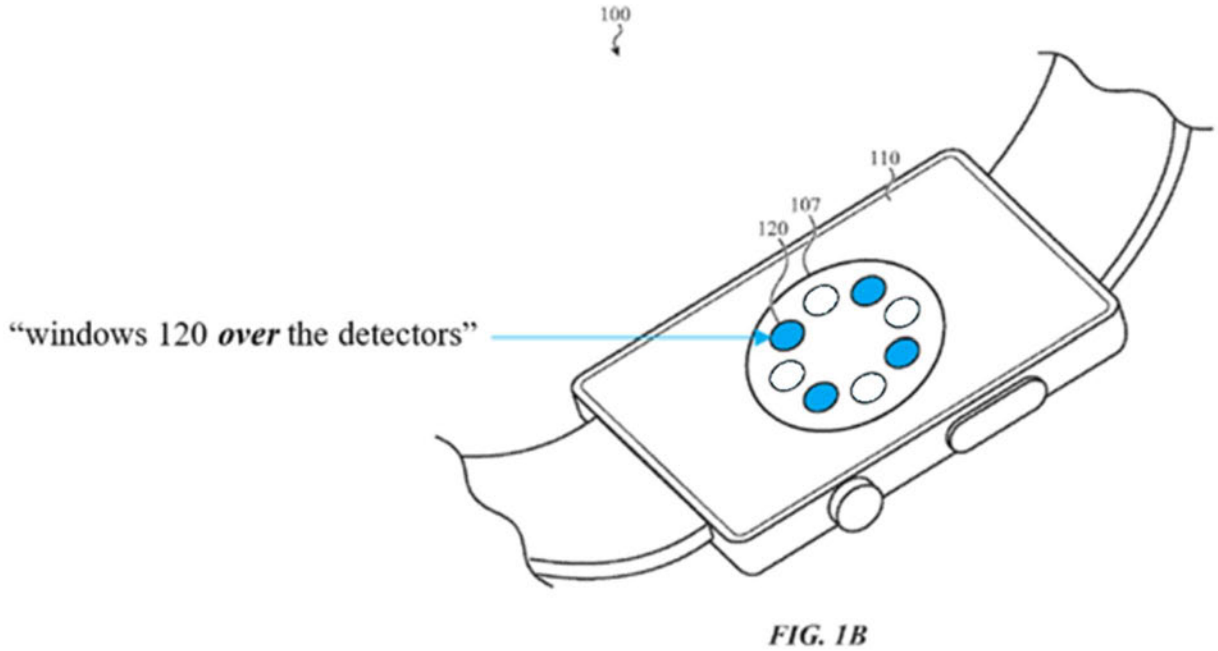

CX-0103 at FIG. 1B (annotated).

Block, Venugopal, and Mannheimer also filed a patent application describing "For example, the back surface can include … a protrusion located ***over*** each of the openings." CX-1806 ¶[0044]; *see also* CX-0291C (Mehra) at 141:22-142:8 (thermistor "on the top of the

MASIMO 2042
Apple v. Masimo
IPR2024-00241

[redacted]

[redacted]" module). Each Apple description confirms a POSITA would understand the terms "over" and "above" in the context of a wearable device refer to the relative position of the convex protrusion to the optical components beneath it, and not to Earth's center.

Finally, when arguing invalidity, Apple evaluated references without referring to their orientation when taking a measurement. Tr. (Warren) at 1210:13-1211:8 (arguing Lumidigm "teaches" '501 Patent **[1C]**), 1233:15-22 (admitting "the opening" of Seiko 131 is "***above*** the photodiode in Fig. 28"). Indeed, Warren explained a photodiode "can't detect light without some sort of opening ***above*** it." *See id.* at 1193:5-6.

Apple also asserts Cramer teaches the claimed protrusion "over"/"above" the interior surface or photodiodes. Tr. (Warren) at 1246:6-12. Cramer shows "over" in the context of user-worn devices is not limited to "vertically above." RX-0670. For example, Apple relies on the annular rings (22, 22a) shown in FIG. 3 of Cramer (below) as alleged protrusions:

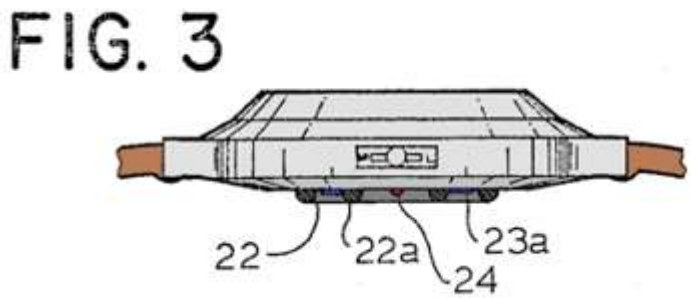

CDX-0012C.025 (showing RX-0670, FIG. 3). Cramer describes these "annular rings extending ***above***" the case of the watch. RX-0670 at 9:51-56.

Apple's patents and validity positions confirm the terms "arranged over"/"positioned over"/"above" refer to covering the interior surface or aligning with the photodiodes, regardless of the device's orientation when in use. *See W.L. Gore & Assoc, Inc. v. Garlock, Inc.*, 842 F.2d

MASIMO 2042
Apple v. Masimo
IPR2024-00241

[redacted]

1275, 1279 (Fed. Cir. 1988) (claims must be interpreted the same way for infringement and validity).

2. <u>"Openings"/"Through Holes"</u>

The six Asserted Claims each recite "openings"/"through holes":

- "a plurality of ***openings*** extending through the protrusion and positioned over the three photodiodes" ('501 **[1D]**);
- "a protrusion comprising a convex surface including separate ***openings*** extending through the protrusion and lined with opaque material, each ***opening*** positioned over a different one of the four photodiodes" ('502 **[19C]**);
- "a plurality of ***openings*** in the convex surface, extending through the protrusion, and aligned with the four photodiodes, each ***opening*** defined by an opaque surface configured to reduce light piping" ('502 **[28F]**);
- "a plurality of ***openings*** provided through the protrusion and the convex surface, the ***openings*** aligned with the photodiodes" ('648 **[8E]**);
- "a plurality of ***through holes***, each ***through hole*** including a window and arranged over a different one of the at least four photodiodes" ('648 **[20D]**).

The openings or through holes allow light to reach the detector. For example, '501 **[1E]** recites "the plurality of openings configured to allow light to reach the photodiodes." The other Multi-Detector Patent Claims recite similar features for light from the measurement site to pass through "openings"/"through holes" before reaching the detector:

- "four photodiodes arranged within the user-worn device and configured to receive light after at least a portion of the light has been attenuated by tissue of the user" ('502 **[19B]**);

MASIMO 2042
Apple v. Masimo
IPR2024-00241

[redacted]

- "four photodiodes … configured to receive light after at least a portion of the light has been attenuated by tissue of the user" ('502 **[28C]**);
- "at least four photodiodes … arranged to capture light at different quadrants of tissue of a user" ('648 **[20B]**) and "a plurality of through holes, each through hole including a window and arranged over a different one of the at least four photodiodes" ('648 **[20D]**).

Similarly, the specification explains the openings and windows within the openings "can be employed in the protrusion 305 to allow light to pass from the measurement site to the photodetectors." JX-0001 at 19:47-48.

The claims also recite the "openings"/"through holes" may include optically transparent material or windows. For example, '502 **[19D]** recites "optically transparent material within each of the openings." **[28G]** recites "a plurality of transmissive windows, each of the transmissive windows extending across a different one of the openings." The '648 **[8F]** recites "a separate optically transparent window extending across each of the openings." **[20D]** recites "a plurality of through holes, each through hole including a window."

Similarly, the patents' specification teaches "[t]he openings can be ***made from glass*** to allow attenuated light from a measurement site, such as a finger, to pass through to one or more detectors." *Id.* at 8:26-29. The specification further teaches "[t]he conductive glass 730b can be used for some or all of the openings 703b." *Id.* at 27:22-26, FIG. 7B; *see also* Tr. (Madisetti) at 702:8-703:5; JX-0001 at 19:38-53 (referring interchangeably to "openings or windows 320, 321, 322, and 323" that "can be made from materials, such as plastic or glass."). FIG. 7B (below) "confirms, again, that the 'opening' [703b] shown in blue can be made of glass or other such material that allows light to pass through …." Tr. (Madisetti) at 703:6-10.

MASIMO 2042
Apple v. Masimo
IPR2024-00241

[redacted]

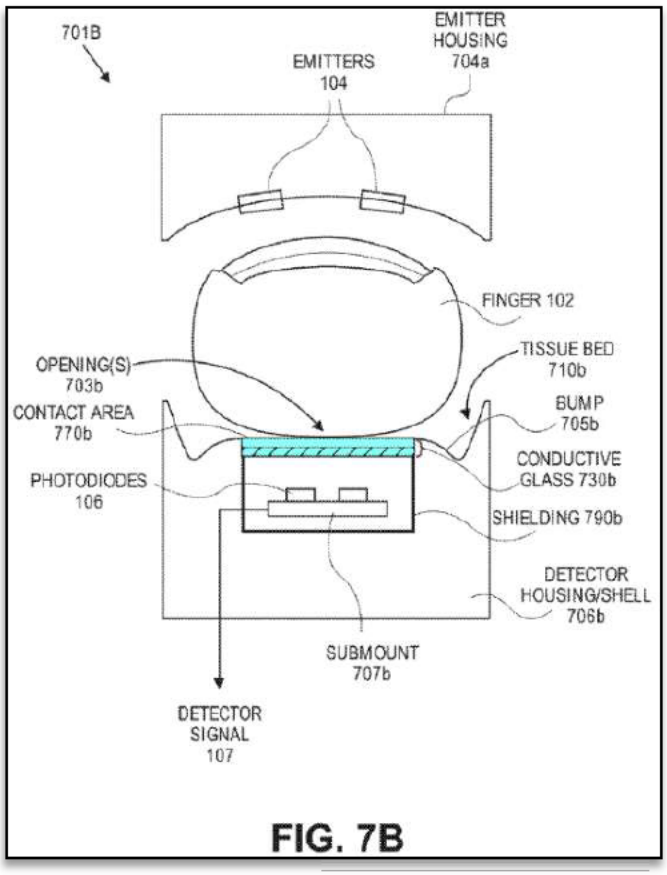

FIG. 7B

CDX-0011C.043 (annotating JX-0001, FIG. 7B).

Apple argues the "openings"/"through holes" require "an absence of material." Tr. (Warren) at 1251:15-1253:3; Apple PHB at 12. But Apple's proposed construction contradicts the specification and excludes the above-described preferred embodiments of an opening, including the opening shown above in FIG. 7B. *See, e.g.*, *Vitronics Corp. v. Conceptronic, Inc.*, 90 F.3d 1576, 1583 (Fed. Cir. 1996) (excluding a preferred embodiment "is rarely, if ever, correct"). Warren also improperly relied solely on drawings of the Accused Products' components while ignoring the specification to interpret the claim. Tr. (Warren) at 1252:7-1253:3; RDX-0008.143; *see, e.g.*, *Vivid Techs., Inc. v. Am. Sci. & Eng'g, Inc.*, 200 F.3d 795, 803 (Fed. Cir. 1999) ("claims are construed objectively and without reference to the accused device").

MASIMO 2042
Apple v. Masimo
IPR2024-00241

Apple's patents also confirm a POSITA would understand "openings" do not require "an absence of material." One of Block and Venugopal's patents explains, "[t]he back surface (i.e., underside of the device) may comprise an opening or a window in the housing that is aligned with the illumination field and/or field-of-view of the light emitter(s) and/or light sensor(s) and an ***optically transparent cover structure disposed over or within the opening***." CX-0118 at 30:19-24. That specification describes FIG. 16B (below) as having "openings 1604" and "windows 1604," interchangeably as the same structure within the back surface. CX-0118 at 31:4-38. There is no "absence of material."

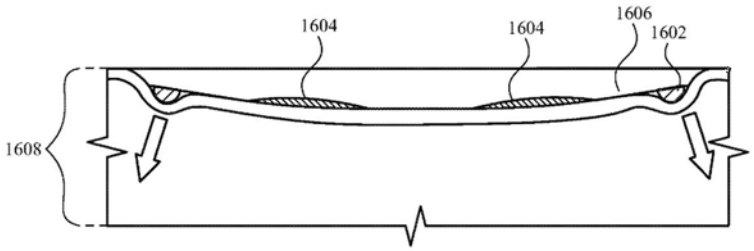

FIG. 16B

CX-0118.

Another Apple patent publication listing Block, Venugopal, Land and Mannheimer (CX-0103) as inventors describes a "set of windows is inset in a set of openings in the back cover." CX-0103 at Claim 1; CX-0281C (Block) at 109:13-18, 111:15-21.

Another Block, Venugopal, and Mannheimer patent application describes "[a] transparent or translucent cover structure (e.g., window) can be disposed over or ***within each of the openings*** 401 or cavities." CX-1806 ¶[0037]. FIG. 4B shows the openings 401:

MASIMO 2042
Apple v. Masimo
IPR2024-00241

[redacted]

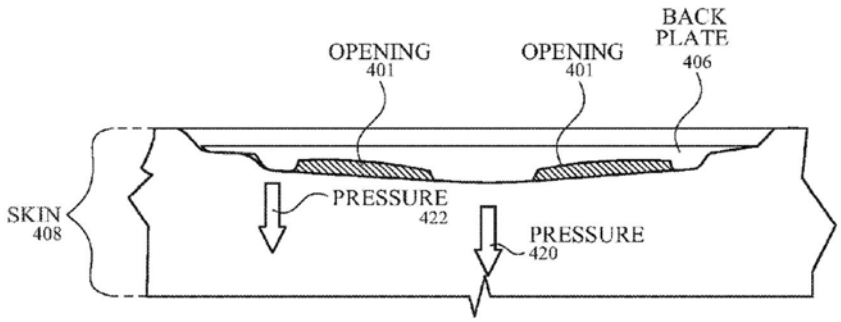

FIG. 4B

CX-1806. Another Block patent describes an "opening" as "a section of underside [] that includes structure … such as an optically transparent glass or plastic." CX-1568 at 7:30-35. And yet another Block and Mannheimer Apple patent also refers to "openings" that "allow light to pass through the housing." CX-1569 at 5:29-35. Each of these Apple patents is consistent with how Madisetti explained a POSITA would understand "openings"/"through holes."

Finally, Apple relied on a different interpretation of "openings" for validity. There, Warren opined the claimed openings are taught by Seiko 131's "opening above the photodiode in FIG. 28." Tr. (Warren) at 1233:18-22. Warren later admitted, however, his "opinion is that the ***cover glass [34A] in Seiko 131 does close the through hole*** in terms of the opening at the protrusion." *Id.* at 1273:19-24.

Accordingly, Apple's proposal to limit "openings"/"through holes" to an absence of material with no covering at all contradicts the evidence.

C. <u>Infringement</u>

1. <u>Legal Standard</u>

Patent infringement analysis requires two steps: (1) properly construing the claim and (2) comparting the properly construed claim to the accused device. *Tanabe Seiyaku Co.* v. *Int'l Trade Comm'n,* 109 F.3d 726, 731 (Fed. Cir. 1997). For literal infringement, Masimo must

MASIMO 2042
Apple v. Masimo
IPR2024-00241

[redacted]

show the Accused Products satisfy each element of a claim. *Kraft Foods, Inc.* v. *Int'l Trading Co.*, 203 F.3d 1362, 1370 (Fed. Cir. 2000).

2. Apple Infringes '501 Patent Claim 12

As shown below, the Accused Products satisfy each element of '501 Patent Claim 12. Claim 12 depends from Claim 1.

a. Disputed Elements

The parties do not dispute the structure and operation of the Accused Products. Apple disputes two elements only (**[1C]** and **[1D]**), based on its belated claim-construction arguments addressed above.[6] Tr. (Warren) at 1248:5-1253:3; RDX-0008.138, 141. The Accused Products infringe.

i. Element [1C]

The Accused Products satisfy **[1C]**. They include a protrusion "arranged over the interior surface" and comprising a convex surface, as shown below.

[6] Masimo addresses the two disputed elements first, followed by the undisputed elements.

MASIMO 2042
Apple v. Masimo
IPR2024-00241

[redacted]

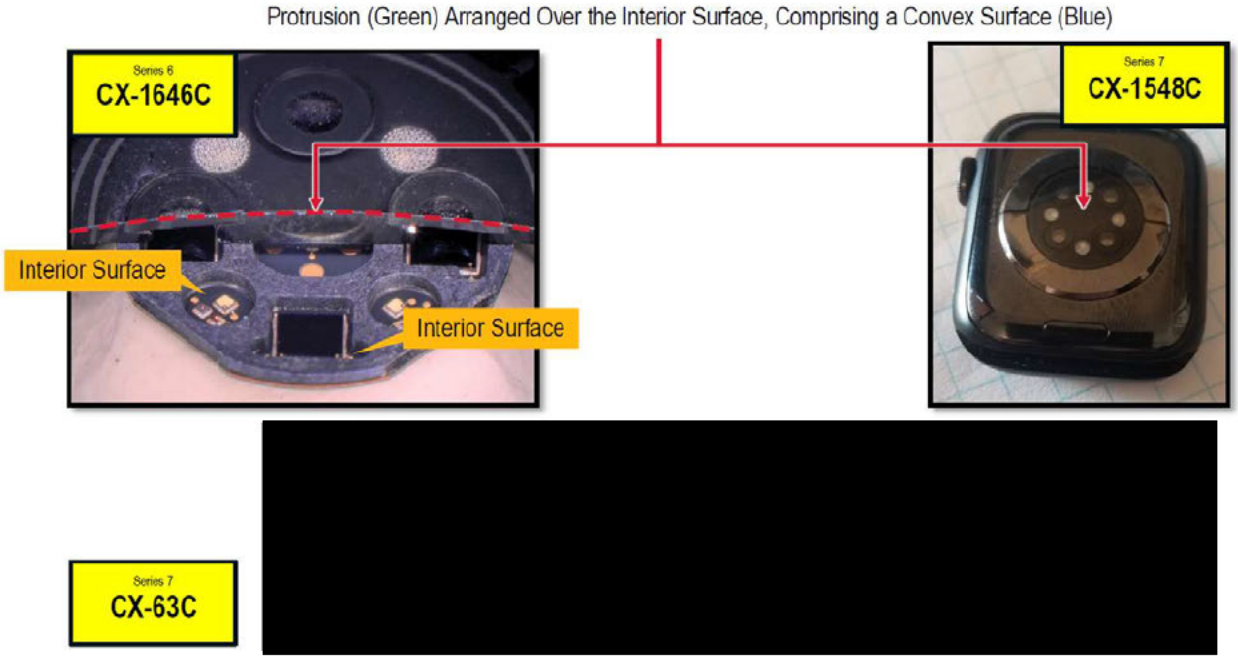

[redacted]

CDX-0011C.016 (citing CX-1646C at 4; CX-1548C at 3; CX-0063C at 1). Madisetti identified the protrusion with a red arrow and its convex surface with a dashed line. Tr. (Madisetti) at 681:12-23. The protrusion "is arranged over the interior surface and comprises a convex surface." *Id.* Madisetti also annotated the CX-0063C figure to show "[t]he protrusion is the green and the blue, and the convex surface is the blue portion." *Id.* at 681:24-682:3. Thus, the protrusion comprises a convex surface. *Id.*; *see also* CDX-0011C.016 (citing CX-0063C at 1; CX-0070C at 1, 3; CPX-0159; CX-0281C (Block) at 120:8-13, 106:2-107:17 (the Accused Products have a convex dome "protruding from the watch" that is "fair to call … a protrusion")); CX-0064C at 1-3; CX-0071C at 1-3. Apple does not dispute this aspect of **[1C]**. Apple PHB at 8-11.

The Accused Products include a protrusion and openings or through holes over the interior surface or photodiodes as claimed. Tr. (Madisetti) at 681:12-682:11 (protrusion), 682:12-683:17 (openings). The Accused Products' protrusion, openings, and through holes are "over" or "above" the interior surface or photodiodes. The configuration of the hardware and

MASIMO 2042
Apple v. Masimo
IPR2024-00241

[redacted]

software does not change depending on the Accused Products' orientation. Tr. (Madisetti) at 809:5-13.

Apple disputes the protrusion is "***over*** the interior surface" under its new "arranged over" construction. Tr. (Warren) at 1250:11-1251:14. Apple argues the Accused Products only measure oxygen saturation when in a "face up" orientation with respect to Earth's center. *See id.* In that orientation, Apple argues the protrusion, openings, or through holes are ***under***, not "over" or "above," the interior surface or photodiodes. *Id.*; Tr. (Warren) at 1251:24-1252:6. Apple repeats the same argument for other elements reciting "over" or "above"—'502 Patent **[19C]** and **[28E]**, and '648 Patent **[20D]**. *Id.*

Apple's documents describe the optics as being "over" the LEDs. CX-0011C at 26 ("Optics ***over*** LED …."). Apple fabricated non-infringement through testimony from its engineers about the orientation of the Accused Products. Specifically, Venugopal testified "When you're wearing the watch, the MLAs are under the LEDs." Tr. (Venugopal) at 847:20-23. But Apple's patents, including from Venugopal, contradict this contrived testimony, as explained above.

Apple relies on *Nazomi Commc'ns, Inc. v. Nokia Corp.*, 739 F.3d 1339, 1345-46 (Fed. Cir. 2014). Apple PHB at 11. But *Nazomi* involved apparatus claims to a computer recited in functional terms. 739 F.3d at 1345-46. Here, the Asserted Claims concern "user-worn devices" recited in structural terms. The Federal Circuit has "held that 'an apparatus claim directed to a computer that is claimed in functional terms is nonetheless infringed so long as the product is designed in such a way as to enable the user of that [product] to utilize the function ***without having to modify the product***.'" *Id.*, 739 F.3d at 1345 (quoting *Silicon Graphics, Inc. v. ATI Techs., Inc.*, 607 F.3d 784, 794 (Fed. Cir. 2010)).

MASIMO 2042
Apple v. Masimo
IPR2024-00241

[redacted]

Furthermore, in *Nazomi* "the structure … is not even present on the accused products. The installation of [specialized] software is not unlocking existing functionality, but adding new functionality not currently present." *Nazomi*, 739 F.3d at 1346. Here, the parties do not dispute the oxygen-saturation-measurement hardware and software ***is present*** on the Accused Products as sold. CX-0299C (Waydo) at 44:15-22 (oxygen saturation is "implemented in watchOS, which runs on both" Accused Products); CX-0285C (Dua) at 118:13-122:6 (confirming CX-0100C "corresponds to the Apple watchOS version" shipped in September 2021); CX-1200C at 3-6 (the Accused Products all include software for calculating oxygen saturation); CX-0010 (explaining how to use the feature); CX-1227C at 5-6; CX-0100C at 4-5 ([redacted] included in the watchOS software). Apple configures the Accused Products to noninvasively measure and calculate oxygen saturation, without any modification. Thus, *Nazomi* is inapposite.

ii. <u>Element [1D]</u>

The Accused Products satisfy **[1D]**. They include "a plurality of openings extending through the protrusion and positioned over the three photodiodes," as shown below.

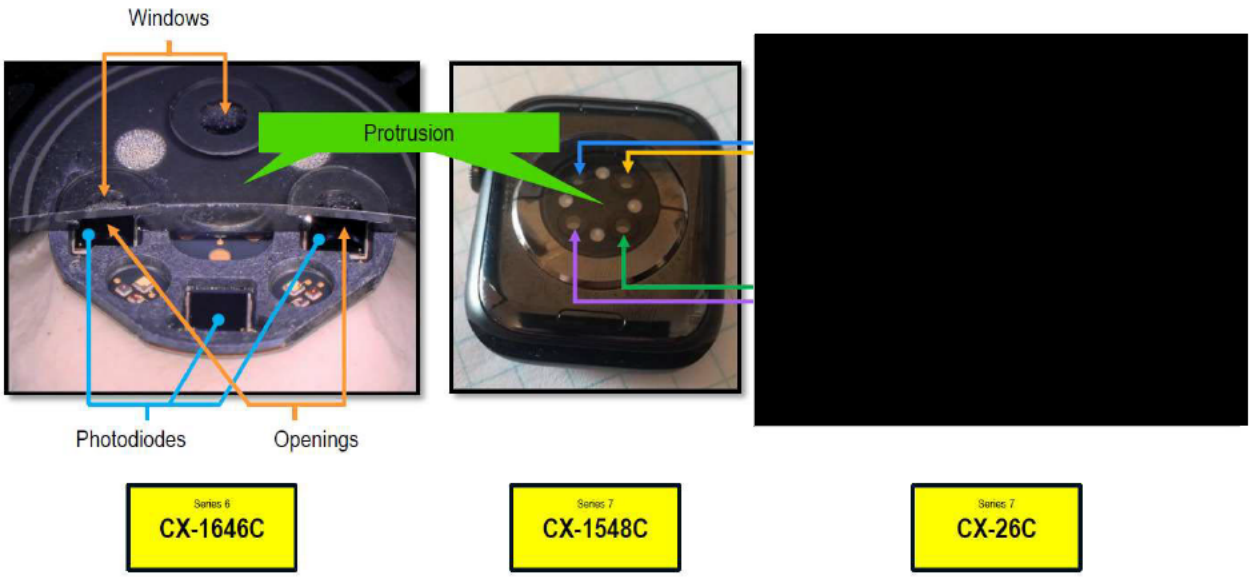

MASIMO 2042
Apple v. Masimo
IPR2024-00241

CDX-0011C.017 (citing CX-1646C at 4; CX-1548C at 3; CX-0026C at 8, 31; CX-0063C; CX-0189C); CX-0190C–CX-0192C. As Madisetti explained, "there are openings that are directly positioned over at least three photodiodes." Tr. (Madisetti) at 682:12-25.

Apple PHB at 12; CX-0281C (Block) at 123:20-124:13, 253:3-8. '501 Patent **[1E]** recites the openings are "configured to allow light to reach the photodiodes," and it is undisputed the sapphire discs are transparent and thus the openings are configured to allow light to reach the photodiodes. *Id.*; CX-0281C (Block) at 272:2-9; CPX-0159. Madisetti explained "one feature of an opening is that they allow light to pass from the tissue to the detectors," and the Accused Products include "openings that allow the Accused Products' detectors to receive the light." Tr. (Madisetti) at 683:10-17.

Apple presents two arguments for the claimed "openings." Tr. (Warren) at 1252:7-1253:3. Both rest entirely on its incorrect claim constructions. First, for elements reciting "openings"/"through holes"—'501 Patent **[1D]**, '502 Patent **[19C]**, **[28F]**, and '648 Patent **[8E]**, **[20D]**—Apple argues these elements require "an absence of material" and thus the Accused Products do not infringe because *Id.* Apple also argued the Accused Products lack openings because they are "waterproof." Tr. (Apple Opening) at 49:2-9; 67:18-22. Waterproofing is irrelevant—the patents address the passage of ***light, not water***. And Warren admitted a photodiode "can't detect ***light*** without some sort of

MASIMO 2042
Apple v. Masimo
IPR2024-00241

opening above it." Tr. (Warren) at 1193:5-6. There is no dispute the detectors within the Accused Products detect light after attenuation into a user's tissue.

Madisetti's analysis that "openings or through-holes can be made from or include glass or other transparent material" naturally aligns with the specification. *Compare* Tr. (Madisetti) at 702:25-703:10 *with* JX-0001 at 8:25-29, 27:22-26, FIG. 7B. The Accused Products have such openings. Tr. (Madisetti) at 682:12-25; CDX-0011C.017.

Second, for elements reciting "openings"/"through holes" that are "over" or "above" the interior surface or photodiodes—'501 Patent **[1D]**, '502 Patent **[19C]**, and '648 Patent **[20D]**—Apple also repeats its "over" orientation claim-construction argument. Tr. (Warren) at 1251:15-1252:6; RDX-0008.141. This fails for the reasons explained above with respect to claim construction and **[1C]**.

b. Undisputed Elements

Apple does not dispute the Accused Products satisfy: **[1PRE]**, **[1A]**, **[1B]**, **[1E]**, **[1F]**, and **[12]**. *See* Apple PHB at 7-16; RDX-0008.137-8.143; Tr. (Warren) at 1249:10-1253:3. These elements are satisfied, as briefly shown below.

i. Element [1PRE]

Each Accused Products is a user-worn device configured to noninvasively measure blood oxygen saturation and pulse rate, as shown below.

MASIMO 2042
Apple v. Masimo
IPR2024-00241

[redacted]

CDX-0011C.013 (citing CX-1451 at 1:49; CX-1406; CPX-0159; CX-1726; CX-0100C at 3-8; CX-0281C (Block) at 71:21-72:5, 87:10-14, 177:10-178:7, 251:4-7). Based on this evidence, Madisetti confirmed the Accused Products satisfy **[1PRE]**. Tr. (Madisetti) at 679:12-680:5; *see also* CX-0240C; CX-0010; CX-1532; CX-0283C (Lefort) at 85:22-86:13; 191:5-9; CX-1447.

ii. <u>Element [1A]</u>

The Accused Products include what Apple calls a [redacted] (Series 7) sensor module, and each module has at least three LEDs.

MASIMO 2042
Apple v. Masimo
IPR2024-00241

[redacted]

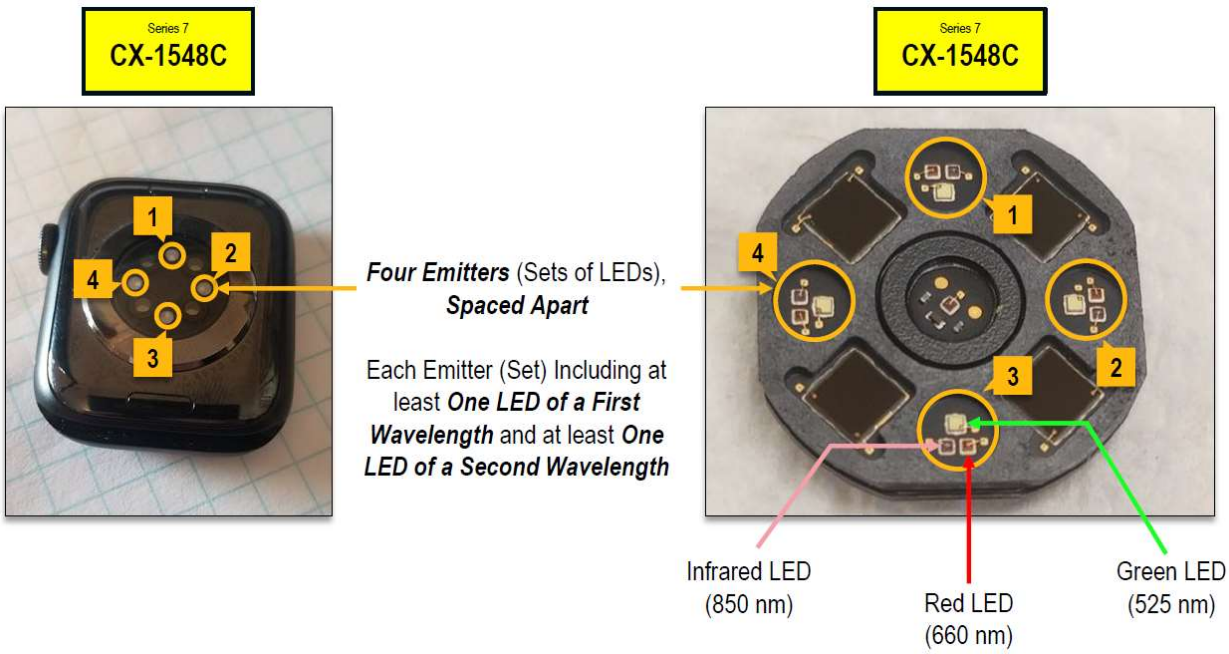

CDX-0011C.014 (citing CX-1548C at 3, 37; CX-0026C at 7-8, 30-32; CX-0059C at 1-3; CX-0281C (Block) at 65:5-67:20 (Accused Products include four clusters of infrared/red/green LEDs)). Based on this evidence, Madisetti confirmed the Accused Products satisfy **[1A]**. Tr. (Madisetti) at 680:6-22; *see also* CX-0281C (Block) at 84:10-85:16; CX-0026C at 9-17; CX-0057C at 1-4; CX-0283C (Lefort) at 103:14-17; CX-0027C at 3-5.

iii. <u>Element [1B]</u>

The Accused Products' sensor modules each include four photodiodes arranged on an interior surface of the user-worn device and configured to receive light attenuated by tissue of the user.

[redacted]

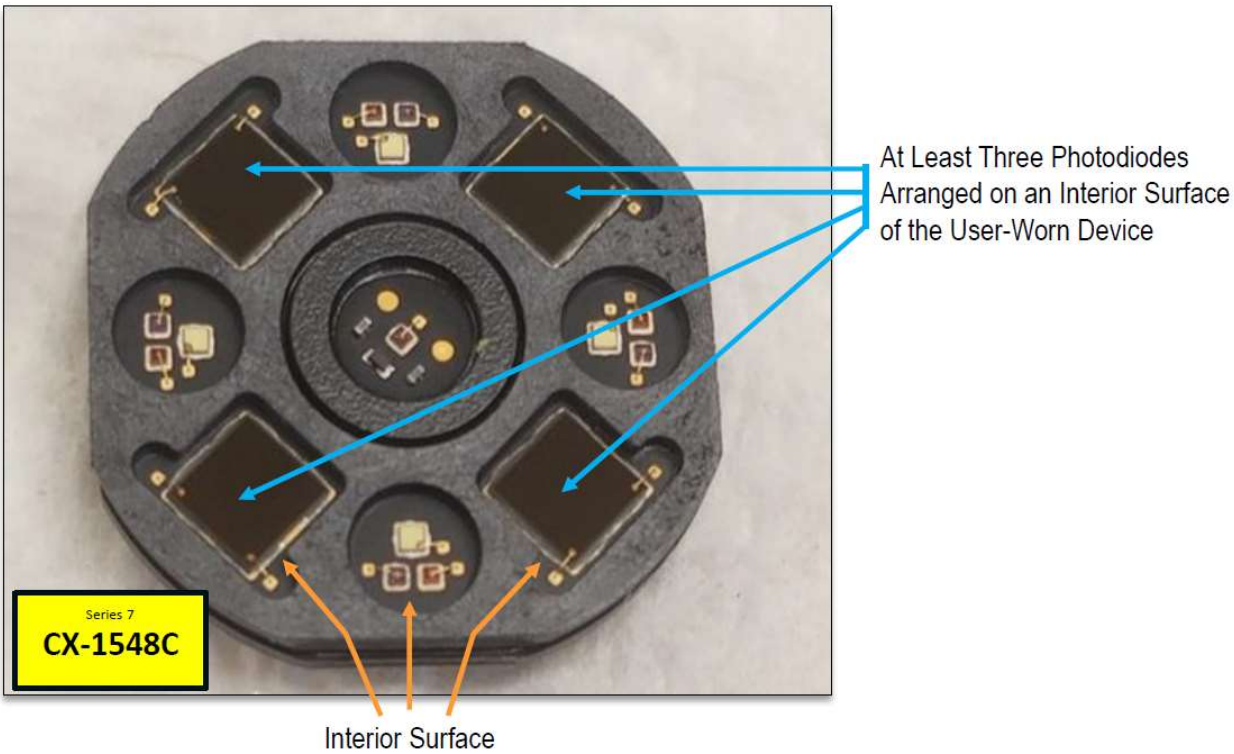

CDX-0011C.015 (citing CX-1548C at 37; CX-0026C at 7-8, 30-32; CX-0059C at 1, 3; CX-0281C (Block) at 70:13-16 (the Accused Products' LEDs, and thus their photodiodes, are mounted on "an interior surface"), 86:2-87:18 (confirming "inside" the Accused Products are "four photodiodes" configured to "detect light emitted by the LEDs after the emitted light passes through the user's tissue")). Based on this evidence, Madisetti confirmed the Accused Products satisfy **[1B]**. Tr. (Madisetti) at 680:23-681:11; *see also* CX-0283C (Lefort) at 103:10-104:22; CX-0057C at 1-3; CX-0027C at 3-5.

iv. <u>Element [1E]</u>

The Accused Products' four openings [redacted] CX-0291C (Mehra) at 98:7-22, 80:5-17, 71:6-72:1, 91:19-92:14. [redacted]

MASIMO 2042
Apple v. Masimo
IPR2024-00241

[redacted]

[redacted] *Id.* at 82:20-93:5.

[redacted] *See, e.g.*, *id.* [redacted] *Id.* at 70:20-71:15, 91:22-92:1, 92:5-7; CX-0189C at 1–CX-0192C at 1. The Accused Products satisfy **[1E]** as shown below.

[redacted]

CDX-0011C.018 (citing CX-0070C at 1; CX-0189C at 2; CX-1548C at 3; CX-0291C (Mehra) at 71:6-77:21, 80:5-17, 82:8-86:10, 91:19-94:19, 97:17-98:22; CX-0283C (Lefort) at 28:6-30:1, 107:2-109:20; CX-0067C at 11 [redacted] CX-0072C at 26, 29-30); CX-0190C at 2–CX-0192C at 2. Based on this evidence, Madisetti confirmed the Accused Products satisfy **[1E]**. Tr. (Madisetti) at 683:18-685:3; *id.* at 684:9-12 ([redacted]).

The specification provides an example of light-piping as light emitted by LEDs that "bypasses [the] measurement site" and is thus not attenuated by the user's tissue before it is

MASIMO 2042
Apple v. Masimo
IPR2024-00241

received by the photodiodes. JX-0001 at 22:48-50. Tr. (Madisetti) at 684:2-12; CX-0291C (Mehra) at 91:19-93:5, 73:21-74:8; CX-0283C (Lefort) at 27:18-30:1; CX-1646C at 4; CX-0063C at 1; CX-0064C at 1-3; CX-0071C at 1-3; CX-0189C at 1-5–CX-0192C at 1-5; CPX-0159.

v. <u>Element [1F]</u>

The Accused Products include a *See, e.g.*, CX-1705 at 2; CX-0072C at 3, 26; CX-1726 at 2; CX-1548C at 30. *See, e.g.*, CX-0013C at 12; CX-0014C at 7, 15-16; CX-0017C at 4-5; CX-0100C at 6-31; CX-0299C (Waydo) at 38:10-40:6; CX-0285C (Dua) at 123:8-17, 124:9-125:1, 127:15-20, 130:10-131:12. . *See, e.g.*, CX-0100C at 6-31; CX-0299C (Waydo) at 50:11-52:4; CX-0285C (Dua) at 123:8-17, 127:15-20, 120:15-122:6.

As shown below in CDX-0011C.019 (excerpted), CX-0100C at 7. *See, e.g.*, CX-0100C at 4-8; CX-0281C (Block) at 71:21-73:7, 87:10-88:9; CX-0285C (Dua) at 123:8-17, 124:9-125:1, 125:20-127:20; CX-0299C (Waydo) at 50:11-52:4.

MASIMO 2042
Apple v. Masimo
IPR2024-00241

[redacted]

[redacted] *See, e.g.*, CX-0100C at 1-8, CX-0285C (Dua) at 124:11-125:5, 126:11-127:20, 130:10-131:12, 140:20-141:10; CX-0299C (Waydo) at 50:11-52:4. [redacted] *See, e.g.*, *id.*

[redacted]

CDX-0011C.019 (citing CX-0013C at 12; CX-0100C at 1-31; CX-0010; CX-1726 at 2; CX-0072C at 3; CX-0281C (Block) at 71:21-73:7, 87:10-88:9; CX-0285C (Dua) at 120:15-127:20, 130:10-131:12, 140:20-141:10; CX-0299C (Waydo) at 38:10-40:6, 50:11-52:4). Based on this evidence, Madisetti confirmed the Accused Products satisfy **[1F]**. Tr. (Madisetti) at 685:4-25.

vi. <u>Element [12]</u>

The convex surface of the Accused Products' protrusion is an outermost surface configured to contact the tissue of the user and conform the tissue into a concave shape, as shown below.

MASIMO 2042
Apple v. Masimo
IPR2024-00241

[redacted]

[redacted]

Series 7
CX-63C

Series 7
CX-1548C

CDX-0011C.020 (citing CX-0063C at 1; CX-1548C at 3; CX-0070C at 1; CPX-0159; CX-0010 at 3 ([redacted]); CX-0281C (Block) at 200:6-14 ([redacted])). Based on this evidence, Madisetti confirmed the Accused Products satisfy **[12]**. Tr. (Madisetti) at 686:23; CX-0064C at 1; CX-0071C at 1.

Accordingly, the Accused Products infringe '501 Patent Claim 12. Tr. (Madisetti) at 686:19-23.

3. Apple Infringes '502 Patent Claim 22

As set forth below, the Accused Products satisfy each element of '502 Patent Claim 22.

a. Disputed Elements

For '502 Patent **[19C]**, Apple repeats its "over" and "openings" arguments. Apple PHB at 7-16; RDX-0008.137-8.143; Tr. (Warren) at 1249:10-1253:3. Those arguments fail, as shown above. *Supra* Sections III.C.2.a.i-ii.

i. Element [19C]

The Accused Products satisfy **[19C]**. They include a protrusion comprising a convex surface as shown for '501 Patent **[1C]**. The "protrusion include[s] separate openings extending through the protrusion," with "each opening positioned over a different one of the four

MASIMO 2042
Apple v. Masimo
IPR2024-00241

[redacted]

photodiodes" as shown for '501 Patent **[1D]**. As shown for '501 Patent **[1E]**, the openings are lined with opaque material [redacted]). The opaque material is configured to reduce an amount of light reaching the photodiodes without being attenuated by the tissue, as shown for '501 Patent **[1E]**. The Accused Products satisfy **[19C]** as shown above for '501 Patent **[1C]**, **[1D]**, and **[1E]**. Tr. (Madisetti) at 687:16-17; CDX-0011C.021; *supra* Sections III.C.2.a.i-ii, III.C.2.b.iv.

Apple does not dispute the Accused Products include "a protrusion comprising a convex surface." *See* Apple PHB at 7-16; RDX-0008.137-8.143; Tr. (Warren) at 1249:10-1253:3. Apple also does not dispute the openings are lined with opaque material configured to reduce an amount of light reaching the photodiodes without being attenuated by the tissue. *Id.*

Apple repeats the same two arguments it made for '501 Patent **[1C]** and **[1D]**—its "over" orientation argument and its argument "'opening' must include an absence of material." Apple PHB at 7-16. Those arguments fail, as shown above. *Supra* Sections III.C.2.a.i-ii.

b. <u>Undisputed Elements</u>

Apple does not dispute the Accused Products satisfy: **[19PRE]**, **[19A]**, **[19B]**, **[19D]**, **[19E]**, **[20]**, **[21]**, and **[22]**. *See* Apple PHB at 7-16; RDX-0008.137-8.143; Tr. (Warren) at 1249:10-1253:3.

i. <u>Element [19PRE]</u>

The Accused Products are user-worn devices configured to non-invasively measure an oxygen saturation of a user, as shown for '501 Patent **[1PRE]**. Tr. (Madisetti) at 687:8-11; CDX-0011C.021.

MASIMO 2042
Apple v. Masimo
IPR2024-00241

[redacted]

ii. Element [19A]

The Accused Products include a plurality of emitters configured to emit light, and each of the emitters includes three light emitting diodes (LEDs), as shown for '501 Patent **[1A]**. Tr. (Madisetti) at 687:12-13; CDX-0011C.021.

iii. Element [19B]

The Accused Products include four photodiodes configured as claimed, as shown for '501 Patent **[1B]**. Tr. (Madisetti) at 687:14-15; CDX-0011C.021.

iv. Element [19D]

The Accused Products include optically transparent material—[redacted] within each of the openings, as shown for '501 Patent **[1D]**. Tr. (Madisetti) at 688:1-3; CDX-0011C.022.

v. Element [19E]

The Accused Products include one or more processors configured to receive one or more signals from the photodiodes and calculate, using those signals, the measurement of average SpO_2, which is indicative of the SpO_2 of the user, as shown above for '501 Patent **[1F]**. Tr. (Madisetti) at 688:3-4; CDX-0011C.022.

vi. Element [20]

The Accused Products' [redacted] includes a thermistor configured to provide a temperature signal, as shown below.

MASIMO 2042
Apple v. Masimo
IPR2024-00241

CDX-0011C.023 (citing CX-0026C at 31, 7-8, 29-32; CX-1548C at 37; CX-0059C at 1-5; CX-0100C at 6-12 ( )). Based on this evidence, Madisetti confirmed the Accused Products satisfy **[20]**. Tr. (Madisetti) at 688:19-689:16; CX-0281C (Block) at 61:22-62:22, 82:22-83:5; CX-0283C (Lefort) at 78:13-79:2, 103:18-20; CX-0016C at 14-15; CX-0023C at 29-32; CX-0027C at 3-5.

vii. <u>Element [21]</u>

The Accused Products receive a temperature signal from the thermistor and adjust the calculation of average SpO_2 responsive to the temperature signal, as shown below.

MASIMO 2042
Apple v. Masimo
IPR2024-00241

[redacted]

CDX-0011C.024 (citing CX-0100C at 8, 6-12; CX-0281C (Block) at 62:3-64:17 (thermistor "report[s] a temperature back to the system"); CX-0283C (Lefort) at 78:4-79:18, 123:6-12; CX-0299C (Waydo) at 84:2-85:22; CX-0285C (Dua) at 139:1-15, 128:15-129:18; CX-0016C at 5). Based on this evidence, Madisetti confirmed the Accused Products satisfy **[21]**. Tr. (Madisetti) at 689:17-690:16; *see also* CX-0281C (Block) at 83:11-15; CX-0285C (Dua) at 22:14-23:18.

viii. <u>Element [22]</u>

The Accused Products' plurality of emitters includes at least four emitters, and each emitter includes a respective set of at least three LEDs, as shown for '502 Patent **[19A]** (and thus, the same reasons shown for '501 Patent **[1A]**). Tr. (Madisetti) at 688:6-8; CDX-0011C.022.

Accordingly, the Accused Products infringe '502 Patent Claim 22. Tr. (Madisetti) at 690:17-21.

MASIMO 2042
Apple v. Masimo
IPR2024-00241

[redacted]

4. Apple Infringes ’502 Patent Claim 28

The Accused Products satisfy each element of ’502 Patent Claim 28.

a. Disputed Elements

For ’502 Patent **[28E]** and **[28F]**, Apple repeats its “over” and “openings” arguments. Apple PHB at 7-16; RDX-0008.137-8.143; Tr. (Warren) at 1249:10-1253:3. Those arguments fail, as shown above. *Supra* Sections III.C.2.a.i-ii.

i. Element [28E]

The Accused Products include “a protrusion comprising a convex surface.” Apple PHB at 7-16. That protrusion is “arranged above the interior surface” and comprises a convex surface, as shown for ’501 Patent **[1C]**. Tr. (Madisetti) at 691:10-11; CDX-0011C.025.

Apple repeats the “over” orientation argument it made for ’501 Patent **[1C]**. Apple PHB at 7-16; RDX-8.137-8.143. That argument fails, as shown above. *Supra* Section III.C.2.a.i.

ii. Element [28F]

The Accused Products satisfy **[28F]**. They include “a plurality of openings in the convex surface, extending through the protrusion” and aligned with the four photodiodes, as shown for ’501 Patent **[1D]**. Each opening is defined by an opaque surface [redacted] as shown for ’501 Patent **[1E]**. The Accused Products satisfy **[28E]** as shown above for ’501 Patent **[1D]** and **[1E]**. Tr. (Madisetti) at 691:14-16; CDX-0011C.026.

Apple does not dispute the Accused Products’ openings are aligned with the four photodiodes. *See* Apple PHB at 7-16. Apple repeats the same “‘opening’ must include an absence of material” argument it made for ’501 Patent **[1D]**. *Id.* This argument fails, as shown above. *Supra* Section III.C.2.a.ii.

MASIMO 2042
Apple v. Masimo
IPR2024-00241

[redacted]

b. Undisputed Elements

Apple does not dispute the Accused Products satisfy: **[28PRE]-[28D]**, **[28G]-[28M]**. Apple PHB at 7-16; RDX-0008.137-8.143; Tr. (Warren) at 1249:10-1253:3.

i. Element [28PRE]

The Accused Products are user-worn devices configured to non-invasively measure an oxygen saturation of a user, as shown for '501 Patent **[1PRE]**. Tr. (Madisetti) at 690:24-691:3; CDX-0011C.025.

ii. Element [28A]

The Accused Products include a first set of LEDs including at least an LED configured to emit light at a first wavelength and an LED configured to emit light at a second wavelength, as shown for '501 Patent **[1A]**. Tr. (Madisetti) at 691:3-5; CDX-0011C.025; *see also* CX-0100C at 6-12, 20-21; CX-0281C (Block) at 83:19-85:1; CX-0283C (Lefort) at 66:8-67:8 (four sets of LEDs used for blood-oxygen measurement), 86:14-87:4, 103:14-17.

iii. Element [28B]

The Accused Products include a second set of LEDs spaced apart from the first set of LEDs and including at least an LED configured to emit light at the first wavelength and an LED configured to emit light at the second wavelength, as shown for '501 Patent **[1A]**. Tr. (Madisetti) at 691:5-7; CDX-0011C.025; CX-0100C at 6-12, 20-21; CX-0281C (Block) at 83:19-85:1; CX-0283C (Lefort) at 66:8-67:8, 86:14-87:4, 103:14-17.

iv. Element [28C]

The Accused Products include four photodiodes arranged in a quadrant configuration on an interior surface, as shown for '501 Patent **[1B]** and below.

MASIMO 2042
Apple v. Masimo
IPR2024-00241

[redacted]

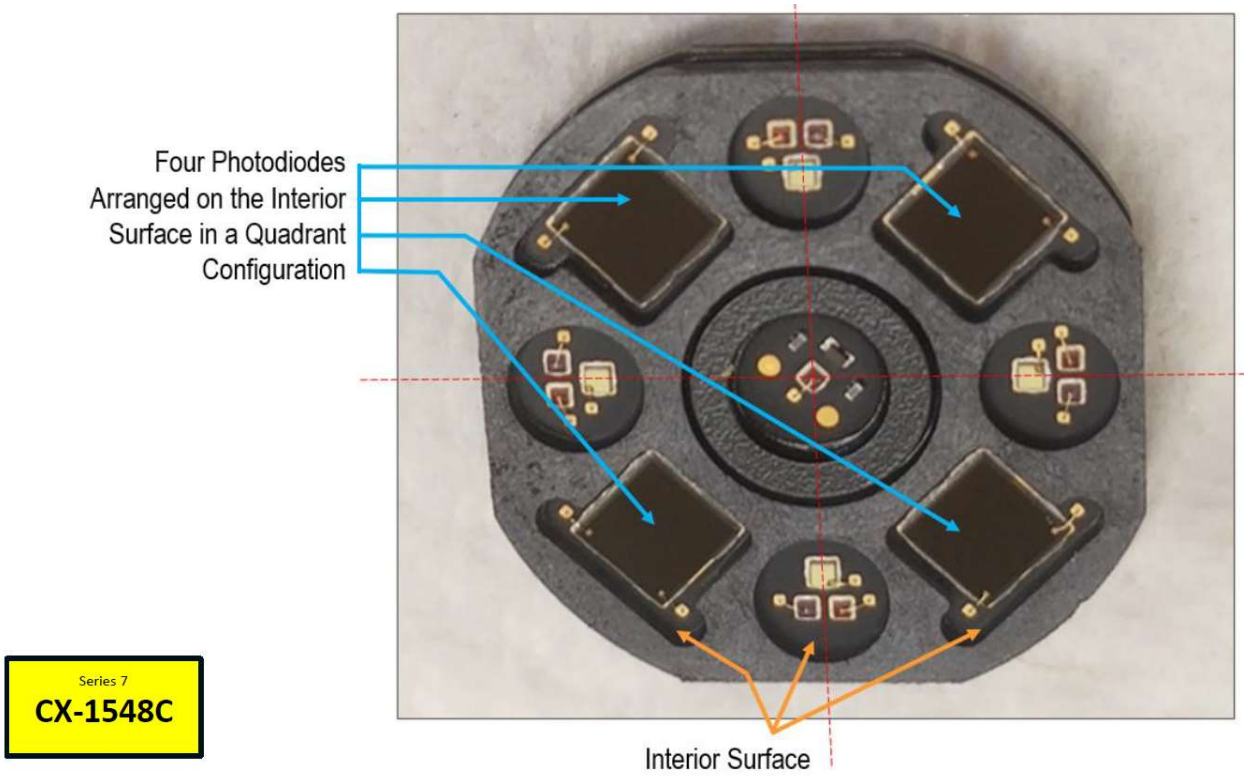

CDX-0011C.028 (citing CX-1548C; "The evidence discussed for '501 Patent **[1B]**"). Based on this evidence, Madisetti confirmed the Accused Products satisfy '502 Patent **[28C]**. Tr. (Madisetti) at 692:3-16.

v. <u>Element [28D]</u>

The Accused Products include a thermistor configured to provide a temperature signal, as shown for '502 Patent **[20]**. Tr. (Madisetti) at 691:8-9; CDX-0011C.025.

vi. <u>Element [28G]</u>

The Accused Products include a plurality of [redacted] each of which extends across a different one of the openings and allows light to reach the photodiodes, as shown for '501 Patent **[1D]** and **[1E]**. Tr. (Madisetti) at 691:16-17; CDX-0011C.026.

MASIMO 2042
Apple v. Masimo
IPR2024-00241

[redacted]

vii. Element [28H]

The Accused Products include at least one opaque wall extending between the interior surface and the protrusion, wherein the interior surface, opaque wall, and protrusion form cavities, and wherein the photodiodes are arranged on the interior surface within the cavities, as shown below.

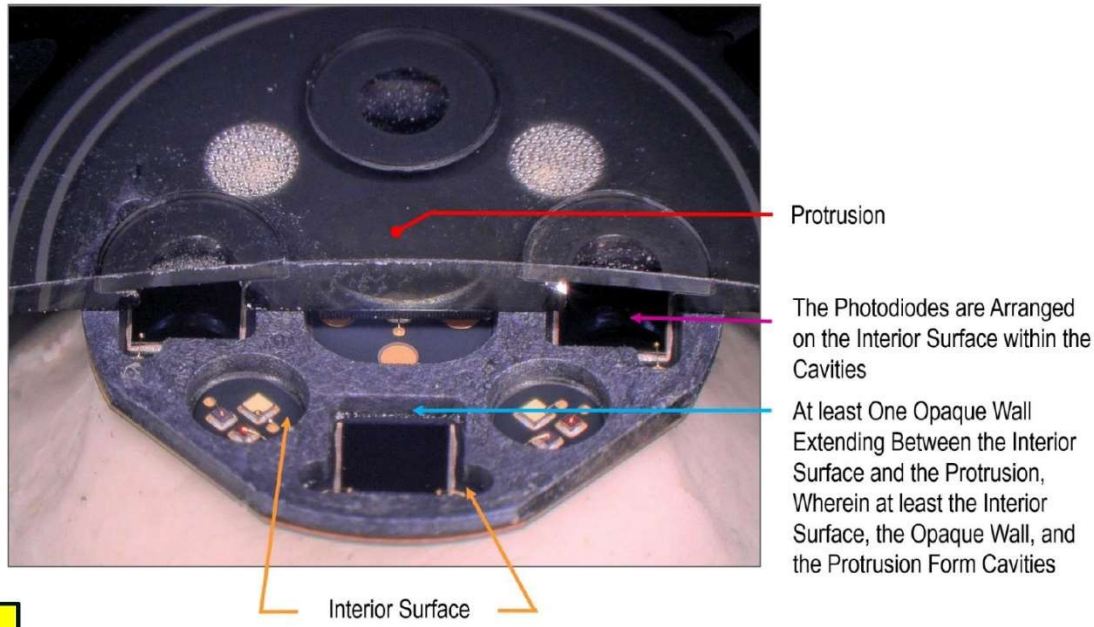

Series 6
CX-1646C

CDX-0011C.029 (citing CX-1646C at 1, 4; CX-0026C at 7-8, 30-32; CX-0059C at 1-3; CX-0283C (Lefort) at 87:5-8, 105:22-106:7). Based on this evidence, Madisetti confirmed the Accused Products satisfy **[28H]**. Tr. (Madisetti) at 692:17-693:13; *see also* CX-1548C at 37.

viii. Element [28I]

The Accused Products include one or more processors configured to receive one or more signals from at least one of the photodiodes and calculate an oxygen-saturation measurement of the user, as shown for ’501 Patent **[1F]**. Tr. (Madisetti) at 691:20-23; CDX-0011C.027. The one or more processors are further configured to receive the temperature signal, as shown for ’502 Patent **[21]**. *Id.*

MASIMO 2042
Apple v. Masimo
IPR2024-00241

[redacted]

ix. Element [28J]

The Accused Products include a network interface, WiFi and/or Bluetooth, configured to wirelessly communicate the measurement of physiological parameters, including oxygen saturation, to a mobile phone. CDX-0011C.030 (citing CX-0010 at 5; CX-1726 at 2; CX-0299C (Waydo) at 74:20-75:17 (SpO_2 measurements "stored in the HealthKit database on the Watch will also eventually make its way to the phone" via "Wi-Fi or Bluetooth"); CX-0285C (Dua) at 131:8-133:2, 141:11-17, 144:9-14 ("the heart rate along with the SpO_2 that's measured at the same time are both communicated to the iPhone"); CX-0100C at 4, 7, 33). Based on this evidence and his personal use and observations of the Accused Products' operation, Madisetti confirmed the Accused Products satisfy **[28J]**. Tr. (Madisetti) at 693:14-694:11; *see also* CX-1705 at 1-2; CX-0281C (Block) at 75:10-20.

x. Element [28K]

The Accused Products include a user interface comprising a touch-screen display, and the user interface is configured to display indicia responsive to the oxygen-saturation measurement of the user, as shown below.

MASIMO 2042
Apple v. Masimo
IPR2024-00241

[redacted]

CDX-0011C.031 (citing CX-1407 at 3; CX-0281C (Block) at 237:11-238:8; CX-0010). Based on this evidence, Madisetti confirmed the Accused Products satisfy **[28K]**. Tr. (Madisetti) at 694:12-22; *see also* CPX-0159; CX-1548C at 1; CX-1726 at 1-2; CX-0100C at 4; CX-1705 at 1-2.

xi. <u>Element [28L]</u>

The Accused Products include a storage device configured to at least temporarily store the oxygen-saturation measurement, as shown below.

[redacted]

CDX-0011C.032 (citing CX-0299C (Waydo) at 74:17-19; CX-0285C (Dua) at 131:8-15 (processor "write[s] the calculated SpO2 value to the memory of the watch"); CX-1726 at 1-2 (32GB memory)). Based on this evidence, Madisetti confirmed the Accused Products satisfy **[28L]**. Tr. (Madisetti) at 694:23-695:8; *see also* CPX-0159; CX-0010; CX-0285C (Dua) at 132:17-133:2; CX-1705 at 1-2.

xii. <u>Element [28M]</u>

The Accused Products include a strap configured to position the user-worn device on the user. CDX-0011C.033 (citing CX-0010 at 3, 4; CX-1726 at 3; CX-1705 at 1 (Watches include straps); CPX-0159). Based on this evidence, Madisetti confirmed the Accused Products satisfy **[28M]**. Tr. (Madisetti) at 695:9-20, 696:1-12; *see also* CPX-0159; CPX-0163; CPX-0160; Tr. (Kiani) at 127:3-17.

MASIMO 2042
Apple v. Masimo
IPR2024-00241

[redacted]

Accordingly, the Accused Products infringe '502 Patent Claim 28. Tr. (Madisetti) at 695:21-25, 696:11-15.

5. Apple Infringes '648 Patent Claim 12

The Accused Products satisfy each element of '648 Patent Claim 12.

a. Disputed Elements

For '648 Patent **[8E]**, Apple repeats the same "openings" argument discussed above for '501 Patent **[1D]**. Apple PHB at 7-16; RDX-0008.137-8.143; Tr. (Warren) at 1249:10-1253:3. That argument fails. *Supra* Section III.C.2.a.ii. Apple's "over" orientation argument does not apply to any element of '648 Patent Claim 12.

i. Element [8E]

The Accused Products include "a plurality of openings provided through the protrusion and the convex surface" aligned with the photodiodes, as shown for '501 Patent **[1D]**. Tr. (Madisetti) at 697:1-2; CDX-0011C.034. Apple does not dispute the openings are aligned with the photodiodes. Apple PHB at 7-16. Apple repeats the same "'opening' must include an absence of material" argument it made for '501 Patent **[1D]**. *Id.* at 11-15. That argument fails, as shown above. *Supra* Section III.C.2.a.ii.

b. Undisputed Elements

Apple does not dispute the Accused Products satisfy: **[8PRE]-[8D]**, **[8F]-[8I]**, **[12]**. *See* Apple PHB at 7-16; RDX-0008.137-8.143; Tr. (Warren) at 1249:10-1253:3.

i. Element [8PRE]

The Accused Products are user-worn devices configured to non-invasively determine measurements of a physiological parameter of a user, including oxygen saturation and pulse rate, as shown for '501 Patent **[1PRE]**. Tr. (Madisetti) at 696:16-21; CDX-0011C.034.

MASIMO 2042
Apple v. Masimo
IPR2024-00241

[redacted]

ii. Element [8A]

The Accused Products include a first set of LEDs including at least an LED configured to emit light at a first wavelength and an LED configured to emit light at a second wavelength, as shown for '502 Patent **[28A]** (and as shown for '501 Patent **[1A]**). Tr. (Madisetti) at 696:21-22; CDX-0011C.034.

iii. Element [8B]

The Accused Products include a second set of LEDs spaced apart from the first set of LEDs and including at least an LED configured to emit light at the first wavelength and an LED configured to emit light at the second wavelength, as shown for '502 Patent **[28B]** (and as shown for '501 Patent **[1A]**). Tr. (Madisetti) at 696:22-23; CDX-0011C.034.

iv. Element [8C]

The Accused Products include four photodiodes, as shown for '501 Patent **[1B]**. Tr. (Madisetti) at 696:23-24; CDX-0011C.034.

v. Element [8D]

The Accused Products include a protrusion comprising a convex surface, as shown for '501 Patent **[1C]**. The openings are lined with opaque material, [redacted], as shown for '501 Patent **[1E]**. The Accused Products satisfy **[8D]** for the reasons shown for '501 Patent **[1C]** and **[1E]**. Tr. (Madisetti) at 696:24-697:1; CDX-0011C.034.

vi. Element [8F]

The Accused Products include an optically transparent window ([redacted]) extending across each of the openings, as shown for '501 Patent **[1D]**. Tr. (Madisetti) at 697:5-7; CDX-0011C.035.

MASIMO 2042
Apple v. Masimo
IPR2024-00241

[redacted]

vii. Element [8G]

The Accused Products include one or more processors configured to receive one or more signals from at least one of the photodiodes and output measurements of the average SpO_2 and pulse rate of the user, as shown for '501 Patent **[1F]**. Tr. (Madisetti) at 697:8-9; CDX-0011C.035.

viii. Element [8H]

The Accused Products include a housing.

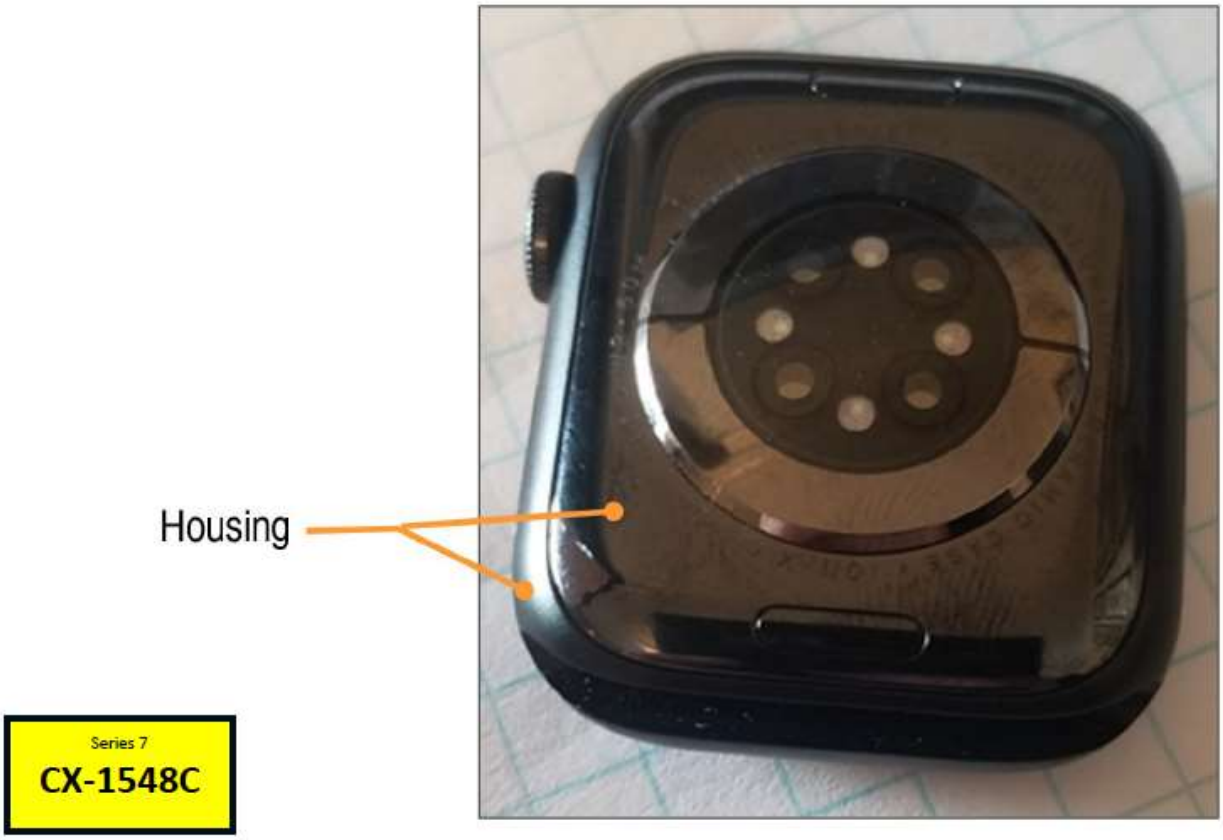

CDX-0011C.036 (citing CX-1548C at 3 (above); "The evidence discussed for '501 Patent **[1 Preamble]**"). Based on this evidence, Madisetti confirmed that the Accused Products satisfy **[8H]**. Tr. (Madisetti) at 697:17-24.

MASIMO 2042
Apple v. Masimo
IPR2024-00241

[redacted]

ix. Element [8I]

The Accused Products include a strap configured to position the housing proximate the tissue of the user when the device is worn, as shown for '502 Patent **[28M]**. Tr. (Madisetti) at 697:12-13; CDX-0011C.0035.

x. Element [12]

The Accused Products are configured to non-invasively determine measurements of the oxygen saturation of a user, as set forth above for '501 Patent **[1PRE]** and **[1F]**. Tr. (Madisetti) at 697:14-16; CDX-0011C.0035.

Accordingly, the Accused Products infringe '648 Patent Claim 12. Tr. (Madisetti) at 697:25-698:7.

6. Apple Infringes '648 Patent Claims 24 and 30

The Accused Products satisfy each element of '648 Patent Claims 24 and 30.

a. Disputed Elements

For '648 Patent **[20C]-[20D]**, Apple repeats its "over" and "through holes" arguments. Apple PHB at 7-16; RDX-0008.137-8.143; Tr. (Warren) at 1249:10-1253:3. Those arguments fail, as shown above. *Supra* Sections III.C.2.a.i-ii.

i. Element [20C]

The Accused Products satisfy **[20C]**. They include "a protrusion comprising a convex surface," as shown for '501 Patent **[1C]**. Tr. (Madisetti) at 698:19-20; CDX-0011C.037. Although **[20C]** does not recite that the protrusion must be positioned "over" the photodiodes, Apple improperly adds this requirement into '502 Patent **[20C]** to repeat the same argument

MASIMO 2042
Apple v. Masimo
IPR2024-00241

made for ’501 Patent **[1C]**. Apple PHB at 8-11; RDX-0008.138.[7] Regardless, the argument fails for the reasons discussed for ’501 Patent **[1C]**. *Supra* Section III.C.2.a.i.

ii. <u>Element [20D]</u>

The Accused Products satisfy **[20D]**. They include “a plurality of through holes” or openings that each include a , as shown for ’501 Patent **[1D]**. Tr. (Madisetti) at 698:21-22; CDX-0011C.037. Each hole is “arranged over a different one of the at least four photodiodes,” as shown for ’501 Patent **[1D]**. *Id.*

Apple repeats its argument for ’501 Patent **[1D]** that each “‘opening’ must include an absence of material.” Apple PHB at 11-15. Apple also repeats the same “over” orientation argument it made for ’501 Patent **[1D]**. *Id.* at 8-11. Both arguments fail for the reasons discussed above. *Supra* Sections III.C.2.a.i-ii. Apple’s “over” argument also fails because it exceeds the scope of Apple’s contentions for **[20D]**.[8]

b. <u>Undisputed Elements</u>

Apple does not dispute that the Accused Products satisfy: **[20PRE]**, **[20A]**, **[20B]**, **[20E]**, **[24]**, **[30]**. *See* Apple PHB at 7-16; RDX-0008.137-8.143; Tr. (Warren) at 1249:10-1253:3.

i. <u>Element [20PRE]</u>

The Accused Products are configured to non-invasively determine measurements, including SpO_2, of a user’s tissue, as shown for ’501 Patent **[1PRE]**. Tr. (Madisetti) at 698:13-14; CDX-0011C.037.

---

[7] Apple’s expert, Warren, exceeds the scope of Apple’s contentions, which argue only that the Accused Products do not have “through holes.” *Cf.* CX-1251C at 217-18.

[8] Apple contends that the Accused Products lack “through holes” but does not dispute that the accused “through holes” are “over” the photodiodes. *Cf.* CX-1251C at 217-18.

MASIMO 2042
Apple v. Masimo
IPR2024-00241

[redacted]

ii. Element [20A]

The Accused Products include a plurality of LEDs, as shown for '501 Patent **[1A]**. Tr. (Madisetti) at 698:15-16; CDX-0011C.037.

iii. Element [20B]

The Accused Products include at least four photodiodes configured to receive light emitted by the LEDs and arranged to capture light at different quadrants of tissue of a user, as shown for '501 Patent **[1B]**. Tr. (Madisetti) at 698:17-18; CDX-0011C.037.

iv. Element [20E]

The Accused Products include one or more processors configured to receive one or more signals from at least one of the photodiodes and determine measurements of oxygen saturation of the user, as shown for '501 Patent **[1F]**. Tr. (Madisetti) at 698:23-24; CDX-0011C.037.

v. Element [24]

The Accused Products' openings or through holes are lined with opaque material—[redacted]—as shown for '501 Patent **[1E]**. Tr. (Madisetti) at 698:25-699:1; CDX-0011C.038. The opaque material is configured to substantially prevent light piping, as shown for '501 Patent **[1E]**. *Id.*

vi. Element [30]

The Accused Products' protrusion includes one or more chamfered edges, as shown below.

MASIMO 2042
Apple v. Masimo
IPR2024-00241

[redacted]

[redacted]

Series 7
CX-63C

CDX-0011C.039 (citing CX-0063C at 1 (above); CX-1548C at 3 (showing chamfered edge on protrusion); CX-0070C at 1 (same)). Based on this evidence, Madisetti confirmed the Accused Products satisfy **[30]**. Tr. (Madisetti) at 699:4-19; *see also* CPX-0159; CX-0281C (Block) at 116:2-117:5 (Accused Products' "chamfered edge is a 45-degree machined—it's machined and edged away at 45 degrees"); CX-0063C at 2; CX-0070C at 3; CX-0062C at 1-2; CX-0069C at 1, 3.

Accordingly, the Accused Products infringe '648 Patent Claims 24 and 30. Tr. (Madisetti) at 699:20-25. Thus, the Accused Products infringe every Asserted Claim of the Multi-Detector Patents. *Id.* at 675:20-676:2; CDX-0011C.008.

D. <u>Domestic Industry – "Technical Prong"</u>

Masimo established the technical prong for all three Multi-Detector Patents by a preponderance of the evidence through testimony from Madisetti, Al-Ali and Scruggs, documentary evidence, and physical evidence of the Masimo Watches. *See Alloc, Inc. v. Int'l Trade Comm'n,* 342 F.3d 1361, 1375 (Fed. Cir. 2003)*; see also Certain Memory Modules*, Inv. No. 337-TA-1089, Comm'n Op., 2022 WL 834257, at *43 (Feb. 1, 2022) (referring to "preponderance of the evidence" standard for technical prong).

MASIMO 2042
Apple v. Masimo
IPR2024-00241

Apple's challenges to Masimo's domestic industry include two primary arguments presented by Warren. Both are insufficient. First, Warren opined he "was simply unable to visually confirm" several claim features. Tr. (Warren) at 1259:9-23. But the extensive testimony, documentary evidence, and physical evidence regarding those features render Warren's "visual analysis" irrelevant. Indeed, for several features Warren was "unable to visually confirm," such as the presence of multiple LEDs and photodiodes, Apple's other expert Sarrafzadeh never contested those features in analyzing these same watches for the '745 Patent. *See* Tr. (Sarrafzadeh) at 1122:3-10, 1127:14-18. The contemporaneous documents establish these items were present.

Second, Warren criticized the Masimo Watches as not being configured to non-invasively measure a physiological parameter because he was "not able to establish that they were producing physiological parameters" and he was "not provided with enough evidence to confirm that." Tr. (Warren) at 1258:9-25. But Masimo presented evidence, including testimony and evidence of demonstrations, establishing the Masimo Watches all non-invasively measure SpO_2. Tr. (Al-Ali) at 272:16-275:12. His insinuation that the display of data from the Masimo Watches is something other than a physiological parameter is conclusory and unsupported. Indeed, he admitted he never calculated "Arms," the industry standard. Tr. (Warren) at 1277:12-20.

Warren appears to rely primarily on what he refers to as with the Masimo W1. RX-1470C at 9.

MASIMO 2042
Apple v. Masimo
IPR2024-00241

[redacted] RDX-0008.149C (citing RX-0239C-RX-0246C; RX-0250C; RX-0260C; RX-0271C; RX-0276C). [redacted] Tr. (Warren) at 1275:22-1276:14. [redacted] Warren has no support for his insinuation that this data is something other than a physiological parameter. The FDA has stated "[t]he SpO2 reading should always be considered an *estimate* of oxygen saturation. For example, if an FDA-cleared pulse oximeter reads 90%, then the true oxygen saturation in the blood is generally between 86%-94%." CX-0269C at 4. In view of this known variation, any allegedly [redacted] obtained by Warren simply expose the flaws in his analysis.

In addition, Warren's opinions regarding [redacted] to support his technical prong challenge directly contradict positions taken by Apple at the evidentiary hearing. Apple's counsel represented to the ALJ that the accuracy of the Masimo Watch measurements is not at issue. Tr. at 295:9-14 (Apple counsel arguing FDA documents not relevant because "there's no claim with respect to the accuracy. [redacted]). Regardless, Masimo's [redacted] confirms the domestic industry articles measure physiological parameters, including oxygen saturation.

1. <u>Masimo Watch Products Satisfy '501 Patent Claim 12</u>

Masimo demonstrated satisfaction of the DI technical prong for '501 Patent Claim 12 by a preponderance of the evidence. *See Alloc*, 342 F.3d at 1375. As described below, the Masimo W1, [redacted] all practice Claim 12.

MASIMO 2042
Apple v. Masimo
IPR2024-00241

[redacted]

a. Element [1PRE]

The W1, [redacted] satisfy **[1PRE]**. Tr. (Madisetti) at 710:23-711:10; CDX-0011C.048 (for W1 citing CPX-0146C; CX-0685C; CX-0805C; CX-0392C; CX-0593C; CX-0595C; CX-0801C; CX-0806C; CX-0784C; CX-0790C; CX-1128C (CAD)); (for [redacted] CPX-0019C; CPX-0020C; CPX-0065C; CX-0653C; CX-0655C; CX-0676C; CX-0390C; CX-0705C; CX-0709C; CX-1125C (CAD); CX-1068C (CPX-0019C video); CX-1069C (CPX-0020C video); CX-1072C (CPX-0065C video)); (for [redacted] citing CPX-0058C; CX-0666C, CX-0536C; CX-1074C; CX-1124C (CAD)); (for [redacted] citing CPX-0052C; CX-0661C; CX-0591C, CX-0836C at 4; CPX-0012C; CX-1111C (CAD)).

Scruggs testified all Masimo Watches "supported the ability to measure oxygen saturation and pulse rate" using processors [redacted] Tr. (Scruggs) at 393:17-20, 407:22-408:4 (describing [redacted] functionality), 410:1-4 (confirming the same operation for [redacted] and [redacted]), 405:8-406:11 (describing [redacted] functionality). Muhsin testified the Masimo Watches calculate oxygen saturation [redacted] Tr. (Muhsin) at 346:6-15. [redacted] Tr. (Muhsin) at 346:6-15.

The ability of the W1, [redacted] to calculate oxygen saturation has been confirmed in numerous inspections of the devices, including those performed by Apple's experts and counsel. Tr. (Scruggs) at 399:15-400:2 (describing demonstration of W1 during deposition); RX-0268C (Apple's experts viewing CPX-0019C); RX-0269C (Apple's experts viewing CPX-0065C); RX-0270C (Apple's experts viewing CPX-0020C); RDX-0008.147C (demonstratives

MASIMO 2042
Apple v. Masimo
IPR2024-00241

regarding observations by Apple's experts for "blood oxygen" and "pulse rate" citing RX-0268C, RX, 0269C, RX-0270C); CX-1069C (Apple's counsel viewing CPX-0020C); CX-1068C (Apple's counsel viewing CPX-0019C); CX-1072C (Apple's counsel viewing CPX-0065C); RX-0266C (inspection by Apple's experts); CX-1074C (inspection by Apple's counsel); RX-0265C (inspection by Apple's experts); CX-1062C inspection by Apple's counsel); Tr. (Madisetti) at 715:20-716:12 (referencing demonstration by Scruggs to Madisetti on March 1 and March 2, 2022). Moreover, *See, e.g.*, RX-0239C; RX-0250C; RX-0271C; RX-0241C; RX-0242C; RX-0243C; RX-0244C; RX-0245C; RX-0246C.

Al-Ali also testified that each of the Masimo Watches he introduced calculated oxygen saturation, Tr. (Al-Ali) at 271:16-277:13, 315:16-317:20. Tr. (Al-Ali) at 271:16-277:13, 315:16-317:20; CX-0378C at 32; CX-0494C. Tr. (Al-Ali) at 318:15-22. Tr. (Al-Ali) at 317:14-20. Tr. (Al-Ali) at 276:12-278:3; CX-0433C. Tr. (Al-Ali) at 261:20-262:25, 263:6-13. Accordingly, the W1, are configured to noninvasively measure a physiological parameter of a user.

MASIMO 2042
Apple v. Masimo
IPR2024-00241

The W1, [redacted] are also all "user-worn," as required by **[1PRE]**. The W1 and [redacted] all contain a strap to place the watch on the user's wrist. CPX-0146C; CPX-0146aC; CPX-0155C; CPX-0155aC; CPX-0019C; CPX-0019aC; CPX-0020C; CPX-0020aC; CPX-0065C; CPX-0065aC; Tr. (Scruggs) at 408:20-409:14, 410:5-24.

An image of the Masimo W1 on a user's wrist and measuring oxygen saturation is shown below.

[redacted]

CX-0790C. The Masimo W1's ability to calculate oxygen saturation and the fact it is user-worn is also shown in its [redacted].

[redacted]

MASIMO 2042
Apple v. Masimo
IPR2024-00241

CX-0685C at 1.

Warren contends and are not user-worn But and CPX-0058C; CPX-0058aC; CPX-0052C; CPX-0052aC; Tr. (Scruggs) at 405:8-406:3 (RevA), 406:23-407:18 (RevD). Accordingly, the W1, are all user-worn devices configured to noninvasively measure a physiological parameter of a user.

b. <u>Element [1A]</u>

The W1, satisfy **[1A]**. Tr. (Madisetti) at 711:14-712:4, 712:20-713:15. The locations of the LEDs in these Masimo Watches are shown below.

MASIMO 2042
Apple v. Masimo
IPR2024-00241

CDX-0011C.049 (excerpt) (for W1 citing CPX-0146C; CX-0784C at 2, 10; CX-0772C; CX-0805C at 3 (W1 s); CX-0801C at 4; CX-1128C (CAD) at 2, 4)); (for citing CPX-0019C; CPX-0020C; CPX-0065C; CX-0676C; CX-0390C at 1, 3 ( ); CX-1125C (CAD) at 2, 6, 7); (for citing CPX-0058C; CX-0666C; CX-0389C at 1, 3 ( ); CX-1124C (CAD) at 3-4, 8); (for citing CPX-0052C; CX-0661C; CX-0701C at 1, 6; CX-0473C at 1, 3; CX-0591C (R); CX-1111C (CAD) at 3, 5, 6).

The below chart summarizes wavelengths of the various LEDs.

MASIMO 2042
Apple v. Masimo
IPR2024-00241

[redacted]

[redacted] CX-0805C at 3 (assembly W1); CX-0801C at 4 (schematic W1); CX-0390C at 3 [redacted]); CX-0536C at 3 ([redacted]); CX-0591C at 1 ([redacted]); CX-0473C ([redacted]); CX-0701C at 7 ([redacted]).

c. Element [1B]

The W1, [redacted] satisfy **[1B]**. Tr. (Madisetti) at 712:5-19. The location of the photodiodes in these Masimo Watches are shown below.

[redacted]

CDX-0011C.050 (excerpt) (for W1 citing CPX-0146C; CX-0784C at 2, 10; CX-0772C; CX-0805C at 3 (showing W1 [redacted]); CX-1128C (CAD)); (for [redacted] citing CPX-0019C; CPX-0020C; CPX-0065C; CX-0653C (CPX-0019C photo); CX-0655C (CPX-0020C photo); CX-0676C (CPX-0065C photo); CX-0390C at 3 [redacted]); CX-1125C (CAD)); (for [redacted] citing CPX-0058C; CX-0389C at 1, 3 (showing [redacted]); CX-1124C (CAD)); (for [redacted] citing CPX-0052C; CX-0661C (photo); CX-0473C at 1, 3 (showing [redacted]); CX-1111C (CAD)).

MASIMO 2042
Apple v. Masimo
IPR2024-00241

[redacted] CX-0805C at 3 (W1 [redacted]); CX-0801C at 3; (W1 [redacted]); CX-0390C at 3 ([redacted]); CX-0705C at 7 ([redacted]); CX-0536C ([redacted]; CX-0710C at 7 ([redacted]); CX-0591C at 1 ([redacted]); CX-0473C at 3 [redacted]); CX-0701C at 7 ([redacted]).

Warren's challenge to **[1B]** based on his inability "to visually confirm" is irrelevant as explained above. He was free to take apart any Masimo Watch provided to Apple, [redacted] Doc. ID 757325 at 31:7-18. Apple refused. *Id.*

d. <u>Element [1C]</u>

The W1, [redacted] satisfy **[1C]**. Tr. (Madisetti) at 713:16-714:7. The protrusion with a convex surface in these Masimo Watches is shown below.

[redacted]

CDX-0011C.051C (excerpt) (for W1 citing CPX-0146C; CX-0784C at 2 ([redacted]); CX-0772C (same); CX-1128C (CAD)); (for [redacted] citing CPX-0019C; CPX-0020C;

MASIMO 2042
Apple v. Masimo
IPR2024-00241

CPX-0065C; CX-1058C at 593 ( ); CX-1038C at 6 (same); CX-0676C (same); CX-1125C (CAD)); (for citing CPX-0058C; CX-0815C (side view photo of CPX-0058C); CX-1124C (CAD)); (for citing CPX-0052C; CX-0661C ( ); CX-1111C (CAD)).

CPX-0146C; CPX-0155C; CX-0784C at 1-6, 8-10, 12-13, CX-0772C; CX-1128C at 3; CPX-0019C; CPX-0020C; CPX-0065C; CX-0814C; CX-1415C; CX-0812C; Tr. (Scruggs) at 424:5-8, 424:13-16, 424:22-24; CX-1125C at 8; CPX-0058C; CX-0815C; CX-1124C; CPX-0052C; CX-0813C; CX-1111C at 2; CX-0395C.

e. <u>Element [1D]</u>

The W1, satisfy **[1D]**. Tr. (Madisetti) at 714:8-24. The openings in these Masimo Watches are shown below. These openings extend through the protrusion and allow light to reach the photodiodes after attenuation by the user's tissue.

CDX-0011C.052 (excerpt) (for W1 citing CPX-0146C; CX-0784C at 2 ( ); CX-0772C (same); CX-1128C (CAD)) (for citing CPX-0019C; CPX-0020C;

MASIMO 2042
Apple v. Masimo
IPR2024-00241

CPX-0065C; CX-1058C at 593 (photo showing openings); CX-1038C at 6 (same); CX-0676C (same); CX-1125C (CAD)) (for [redacted] citing CPX-0058C; CX-1058C at 445 ([redacted]); CX-1124C (CAD)) (for [redacted] citing CPX-0052C; CX-0661C ([redacted]); CX-1111C (CAD)).

The openings are also apparent from the Masimo Watches themselves.

[redacted]

CDX-0001C.048 (excerpt) (for W1 citing CPX-0146C; CX-0685C; CX-0805C; CX-0392C; CX-0593C; CX-0595C; CX-0801C; CX-0806C; CX-0784C; CX-0790C; CX-1128C (CAD)); (for [redacted] citing CPX-0019C; CPX-0020C; CPX-0065C; CX-0653C; CX-0655C; CX-0676C; CX-

MASIMO 2042
Apple v. Masimo
IPR2024-00241

0390C; CX-0705C; CX-0709C; CX-1125C (CAD); CX-1068C (CPX-0019C video); CX-1069C (CPX-0020C video); CX-1072C (CPX-0065C video)); (for citing CPX-0058C; CX-0666C; CX-0536C; CX-1074C; CX-1124C (CAD)); (for citing CPX-0052C; CX-0661C; CX-0591C; CX-0836C at 4; CPX-0012C; CX-1111C (CAD)).

CX-1128C at 4 (W1) (left); CX-1125C at 6 ( ) (right).

CX-1124C at 4) (left); CX-1111C at 6 ( ) (right).

Warren's challenge to **[1D]** based on his inability "to visually confirm" is irrelevant as explained above. *Supra* Section III.D. should be rejected for the reasons explained with respect to infringement. *Supra* Section III.C.2.a.ii.

MASIMO 2042
Apple v. Masimo
IPR2024-00241

[redacted]

f. <u>Element [1E]</u>

The W1, [redacted] satisfy **[1E]**. Tr. (Madisetti) at 714:25-715:19. The opaque surfaces within the openings configured to avoid light piping in these Masimo Watches is shown below.

[redacted]

CDX-0011C.053 (for W1 citing CPX-0146C; CX-0784C at 2; CX-0772C; CX-1128C); (for [redacted] citing CPX-0019C; CPX-0020C; CPX-0065C; CX-1038C at 6; CX-1125C); (for [redacted] citing CPX-0058C; CX-0666C; CX-1124C); (for [redacted] citing CPX-0052C; CX-0661C; CX-1111C).

Scruggs testified all Masimo Watches [redacted] Tr. (Scruggs) at 400:3-16; 401:18-22; 405:9-406:3, 406:23-407:18, 408:20-409:14, 410:5-24. [redacted] Tr. (Scruggs) at 400:3-16; 401:18-22; 405:9-406:3, 406:23-407:18, 408:20-409:14, 410:5-24; *see also* Tr. (Al-Ali) at 261:17-262:6. CX-1185C identifies [redacted] in the W1. Tr. (Scruggs) at

MASIMO 2042
Apple v. Masimo
IPR2024-00241

429:4-16. Tr. (Scruggs) at 400:17-24; *see also* Tr. (Al-Ali) at 261:17-262:6. Masimo conducts Tr. (Scruggs) at 392:19-23.

As can be seen in the below images of these Masimo Watches,

MASIMO 2042
Apple v. Masimo
IPR2024-00241

CDX-0001C.048 (excerpt) (for W1 citing CPX-0146C; CX-0685C; CX-0805C; CX-0392C; CX-0593C; CX-0595C; CX-0801C; CX-0806C; CX-0784C; CX-0790C; CX-1128C (CAD)); (for [redacted] citing CPX-0019C; CPX-0020C; CPX-0065C; CX-0653C; CX-0655C; CX-0676C; CX-0390C; CX-0705C; CX-0709C; CX-1125C (CAD); CX-1068C (CPX-0019C video); CX-1069C (CPX-0020C video); CX-1072C (CPX-0065C video)), (for [redacted] citing CPX-0058C; CX-0666C; CX-0536C; CX-1074C; CX-1124C (CAD)); (for [redacted] citing CPX-0052C; CX-0661C; CX-0591C; CX-0836C at 4; CPX-0012C; CX-1111C (CAD)).

MASIMO 2042
Apple v. Masimo
IPR2024-00241

The opaque lateral surfaces are also apparent in the representative CAD drawings corresponding to each of these Masimo Watches.

CX-1128C at 4 (W1) (left); CX-1125C at 6 ( ) (right).

CX-1124C at 4 ( ) (left); CX-1111C at 6 ( ) (right).

g. <u>Element [1F]</u>

The W1, satisfy **[1F]**. Tr. (Madisetti) at 715:20-716:21; CDX-0011C.054 (for W1 citing CPX-0146C; CX-0805C at 4); CX-0801C at 2-3 ( ); CX-0685C (W1); CX-0789C at 8 (W1 CX-0790C) (for citing CPX-0019C; CPX-0020C; CPX-0065C; CX-0705C at 2-3; CX-1062C at 30, 35) (for citing CPX-0058C; CX-0710C at 2-3; CX-1062C at 48 (

MASIMO 2042
Apple v. Masimo
IPR2024-00241

); CX-1074C (same)) (for citing CPX-0052C; CX-0701C at 2; CPX-0012C; CX-0836C at 4 ())).

All Masimo Watches Tr. (Scruggs) at 393:17-394:3.

The Masimo W1 included Tr. (Scruggs) at 410:5-24. CX-0801C at 4 (; CX-0801C at 3 (output).

The . Tr. (Scruggs) at 408:20-409:14. The Tr. (Scruggs) at 407:22-408:4 (describing functionality), 410:1-4 (confirming the same operation for). CX-0705C at 7 (); CX-0705C at 5 (; CX-0705C at 4 (); CX-0705C at 3 (A).

The included Tr. (Scruggs) at 408:11-19. Tr. (Scruggs) at 407:22-408:4. The

MASIMO 2042
Apple v. Masimo
IPR2024-00241

schematic CX-0710C at 7 ( ); CX-0710C at 5 ( ); CX-0710C at 4 ( ); CX-0710C at 3 ( ); Tr. (Scruggs) at 422:23-423:4.

The includes Tr. (Scruggs) at 405:8-406:11. The Masimo Watches . Tr. (Scruggs) at 393:17-394:3. The schematic CX-0701C at 6 (detectors); CX-0701C at 4 ( ); CX-0701C at 3 ( ); CX-0701C at 2 ( ).

Scruggs's testimony confirmed that . *See* '501 **[1PRE]**, *supra*. Additionally, Scruggs demonstrated the functionality of the Masimo Watches to Apple's counsel, Apple's experts and Madisetti. *See* '501 **[1PRE]**, *supra*. Apple's experts also obtained oxygen-saturation measurements using the Masimo W1. *See* '501 **[1PRE]**, *supra*. Al-Ali introduced Tr. (Al-Ali) at 272:16-275:12.

MASIMO 2042
Apple v. Masimo
IPR2024-00241

[redacted]

h. Element [12]

The W1, [redacted] satisfy **[12]**. Tr. (Madisetti) at 716:22-717:21. The convex surface of these Masimo Watches is shown below.

[redacted]

CDX-0011C.055 (for W1 citing CPX-0146C; CX-0784C at 1-6, 8-10, 12-13; CX-0772C; CX-1128C); (for [redacted] citing CPX-0019C; CPX-0020C; CPX-0065C; CX-0812C; CX-0814C; CX-1415C; CX-1125C); (for [redacted] citing CPX-0058C; CX-0815C; CX-1124C); (for [redacted] citing CPX-0052C; CX-0813C; CX-1111C).

2. Masimo Watch Products Satisfy '502 Patent Claim 28

Masimo demonstrated satisfaction of the DI technical prong for '502 Patent Claim 28 by a preponderance of the evidence. *See Alloc*, 342 F.3d at 1375. As described below, the Masimo W1, [redacted] all practice Claim 28.

a. Element [28PRE]

The W1, [redacted] satisfy **[28PRE]** for the reasons shown above for '501 **[1PRE]**.

MASIMO 2042
Apple v. Masimo
IPR2024-00241

[redacted]

b. <u>Element [28A]</u>

The W1, [redacted] satisfy **[28A]** for the reasons shown above for '501 **[1A]**. Tr. (Madisetti) at 711:14-712:4, 712:20-713:15. The W1 contains [redacted] Tr. (Scruggs) at 410:5-24. [redacted]. [redacted] Tr. (Scruggs) at 408:20-409:14, 406:23-407:18. [redacted]

Warren's challenge to **[28A]** based on his inability "to visually confirm" is irrelevant as explained above.

c. <u>Element [28B]</u>

The W1, [redacted] satisfy **[28B]** for the reasons shown above for '501 **[1A]** and '502 **[28A]**. In these Masimo Watches, the [redacted] meet **[28B]**.

d. <u>Element [28C]</u>

The W1, [redacted] satisfy **[28C]** for the reasons shown above for '501 **[1B]**. [redacted]

MASIMO 2042
Apple v. Masimo
IPR2024-00241

CDX-0011C.050) (for W1 citing CPX-0146C; CX-0784C at 2, 10; CX-0772C; CX-0805C at 3 (showing W1); CX-1128C (CAD)) (for citing CPX-0019C; CPX-0020C; CPX-0065C; CX-0653C (CPX-0019C photo); CX-0655C (CPX-0020C photo); CX-0676C (CPX-0065C photo); CX-0390C at 3 ( ); CX-1125C (CAD)); (for citing CPX-0058C; CX-0389C at 1, 3 (showing); CX-1124C (CAD)).

e. <u>Element [28D]</u>

The W1, satisfy **[28D]**. Tr. (Madisetti) at 720:21-721:5. The location of the thermistors on these Masimo Watches is shown below.

MASIMO 2042
Apple v. Masimo
IPR2024-00241

CDX-0011C.059 (excerpt) (for W1 citing CPX-0146C; CX-0805C at 3; CX-0801C at 3-4); CX-1128C at 2, 4 ( )) (for citing CPX-0019C; CPX-0020C; CPX-0065C; CX-0705C at 3, 7 ( ); CX-0390C at 3 ( ); CX-1125C at 2, 7 ( )) (for citing CPX-0058C; CX-0536C at 1, 3; CX-0710C at 3, 7 ( ); CX-1124C at 3, 8 ( )).

The W1, Tr. (Scruggs) at 406:23-407:18, 408:20-409:14, 410:25-411:2. CX-0389C at 3 ( ); CX-0710C at 7 ( ); 3 ( ); CX-0390C at 3 ( ); CX-0705C at 7 (

MASIMO 2042
Apple v. Masimo
IPR2024-00241

[redacted]), 3 ([redacted]); CX-0805C at 3 (W1 [redacted]); CX-0801C at 4 (W1 [redacted]), 3 (R[redacted]).

Warren's challenge to **[28D]** based on his inability "to visually confirm" is irrelevant as explained above.

f. <u>Element [28E]</u>

The W1, [redacted] satisfy **[28E]** for the reasons described above for '501 **[1C]**.

g. <u>Element [28F]</u>

The W1, [redacted] satisfy **[28F]** for the reasons described above for '501 **[1D]** and **[1E]**. Each of the openings is defined by the opaque surface of the light barrier.

h. <u>Element [28G]</u>

The W1, [redacted] satisfy **[28G]**. For each of the devices it is apparent there are transmissive windows extending across each of the openings above the photodiodes. Apple does not appear to dispute the Masimo Watches [redacted]. [redacted]

[redacted]

MASIMO 2042
Apple v. Masimo
IPR2024-00241

W1

CPX-0155aC at 2, 4; CX-0772C; CX-0784C at 2, 10.

CPX-0019Ca at 2; CPX-0020Ca at 2; CPX-0065Ca at 2.

CPX-0058aC; CPX-0058C.

i. <u>Element [28H]</u>

The W1, satisfy **[28H]**. Tr. (Madisetti) at 721:6-25. Scruggs testified all Masimo Watches Tr. (Scruggs) at 400:3-16. Scruggs further testified

MASIMO 2042
Apple v. Masimo
IPR2024-00241

Id.

CDX-0011C.060 (for W1 citing CPX-0146C; CX-0784C; CX-0772C; CX-1128C); (for citing CPX-0019C; CPX-0020C; CPX-0065C; CX-1038C at 6; CX-1125C); (for citing CPX-0058C; CX-0666C; CX-1124C).

j. <u>Element [28I]</u>

The W1, satisfy **[28I]** as shown above for '501 **[1F]** and '502 **[28D]**.

k. <u>Element [28J]</u>

The W1, satisfy **[28J]** and Apple does not appear to dispute this element. Tr. (Madisetti) at 722:1-24; CDX-0011C.061 (for W1 citing CPX-0146C; CX-0685C (W1); CX-0790C; CX-0805C); CX-0801C ( ); CX-0806C (

MASIMO 2042
Apple v. Masimo
IPR2024-00241

[redacted]

[redacted])) (for [redacted] citing CPX-0019C; CPX-0020C; CPX-0065C; CPX-0141C; CX-0709C ([redacted]); CX-0836C at 9, 12 (photos of results [redacted]), 13; CX-1068C (CPX-0019C video); CX-1069C (CPX-0020C video); CX-1072C (CPX-0065C video); CX-1062C at 32 (CPX-0020C photo)) (for [redacted] citing CPX-0058C; CX-0709C ([redacted]); CX-1062C at 43 [redacted]); CX-1074C (video)).

The W1 includes a [redacted]. Tr. (Scruggs) at 410:5-24; 430:12-431:3. [redacted]

[redacted]

CX-0392C at 3; Tr. (Scruggs) at 410:5-24; 430:12-431:3. The W1 [redacted] CX-0685C at 1. It also shows how one can [redacted]

MASIMO 2042
Apple v. Masimo
IPR2024-00241

CX-0685C.

The include Tr. (Scruggs) at 408:20-409:14; 405:5-10, 406:23-407:18, 409:15-20; CPX-0141C. During the inspections by Apple's experts and Madisetti, Scruggs demonstrated the ability of the RX-0268C; RX-0269C; RX-0270C, CX-0836C at 9, 12, and 13 (screenshots from Madisetti demonstration).

CX-0709C at 3 ( ); Tr. (Scruggs) at 423:5-22; 408:20-409:14; 410:1-4.

MASIMO 2042
Apple v. Masimo
IPR2024-00241

[redacted]

l. Element [28K]

The W1, [redacted] satisfy **[28K]**. Tr. (Madisetti) at 722:1-24. The W1, [redacted] all include a touch screen display. CPX-0146C; CPX-0019C; CPX-0020C; CPX-0065C; CPX-0058C. [redacted] *Supra* Section I.E.

m. Element [28L]

The W1, [redacted] satisfy **[28L]**. Tr. (Madisetti) at 722:1-24; CDX-0011C.061 (for W1 citing CPX-0146C; CX-0685C (W1 [redacted]); CX-0790C; CX-0805C ([redacted] CX-0801C ([redacted]); CX-0806C ([redacted])) (for [redacted] citing CPX-0019C; CPX-0020C; CPX-0065C; CPX-0141C; CX-0709C ([redacted]); CX-0836C at 9, 12 ([redacted]), 13; CX-1068C (CPX-0019C video); CX-1069C (CPX-0020C video); CX-1072C (CPX-0065C video); CX-1062C at 32 (CPX-0020C photo)) (for [redacted] citing CPX-0058C; CX-0709C ([redacted]); CX-1062C at 43 ([redacted]); CX-1074C (video)).

Scruggs testified [redacted] Tr. (Scruggs) at 406:23-407:18, 408:20-409:14, 410:5-24. Muhsin also testified [redacted] Tr. (Muhsin) at 346:3-15.

Warren's challenge to **[28L]** based on his inability "to visually confirm" is irrelevant as explained above.

MASIMO 2042
Apple v. Masimo
IPR2024-00241

[redacted]

n. Element [28M] (Undisputed for W1, [redacted]

The W1, [redacted] satisfy **[28M]**. The W1 and [redacted] all contain a strap to place the watch on the user's wrist. CPX-0146C; CPX-0146aC; CPX-0155C; CPX-0155aC; CPX-0019C; CPX-0019aC; CPX-0020C; CPX-0020aC; CPX-0065C; CPX-0065aC; Tr. (Scruggs) at 408:20-409:14, 410:5-24.

Warren contends the [redacted] does not meet the strap limitation [redacted] CPX-0058C; CPX-0058aC; Tr. (Scruggs) at 406:23-407:18 (RevD), Accordingly, the W1, [redacted] all meet the strap limitation. These straps are all used to position the watch on the user.

3. Masimo Watch Products Satisfy '648 Patent Claim 12

Masimo demonstrated satisfaction of the DI technical prong for '648 Patent Claim 12 by a preponderance of the evidence. *See Alloc*, 342 F.3d at 1375. As described below, the Masimo W1, [redacted] all practice Claim 12.

a. Element [8PRE]

The W1, [redacted] satisfy **[8PRE]** for the reasons shown for '501 **[1PRE]**.

b. Element [8A]

The W1, [redacted] satisfy **[8A]** for the reasons shown above for '502 **[28A]**.

The [redacted] also satisfies **[8A]**. Tr. (Madisetti) at 711:14-712:4, 712:20-713:15; CDX-0011C.049 (for [redacted] citing CPX-0052C; CX-0661C; CX-0701C at 1, 6; CX-0473C at 1, 3; CX-0591C ([redacted]); CX-1111C (CAD) at 3, 5, 6). The [redacted] contains [redacted] Tr. (Scruggs) at

MASIMO 2042
Apple v. Masimo
IPR2024-00241

405:8-406:3.

Warren's challenge to **[8A]** based on his inability "to visually confirm" is irrelevant as explained above.

c. <u>Element [8B]</u>

The W1, satisfy **[8B]** for the reasons shown above for '502 **[28B]**.

also satisfies **[8B]** for the reasons shown above for '501 **[1A]** and '648 **[8A]**. and accordingly meet **[8B]**.

d. <u>Element [8C]</u>

The W1, satisfy **[8C]** for the reasons shown above for '501 **[1B]**.

e. <u>Element [8D]</u>

The W1, satisfy **[8D]** for the reasons shown above for '501 **[1C]** and **[1E]**.

f. <u>Element [8E]</u>

The W1, satisfy **[8E]** for the reasons shown above for '501 **[1D]**.

g. <u>Element [8F]</u>

The W1, satisfy **[8F]** for the reasons shown above for '502 **[28G]** and Apple does not appear to dispute this element.

The also satisfies **[8F]**. From the it is apparent t Apple does not appear to dispute

MASIMO 2042
Apple v. Masimo
IPR2024-00241

[redacted]

CPX-0052aC; CPX-0052C.

h. <u>Element [8G]</u>

The W1, [redacted] satisfy **[8G]** for the reasons shown above for '501 **[1F]**.

i. <u>Element [8H]</u>

The W1, [redacted] satisfy **[8H]**. Tr. (Madisetti) at 725:19-726:1; CDX-0011C.066 (for W1 citing CPX-0146C; CX-0685C; CX-0805C; CX-0392C; CX-0593C; CX-0595C; CX-0801C; CX-0806C; CX-0784C; CX-0790C; CX-1128C (CAD)); (for [redacted] citing CPX-0019C; CPX-0020C; CPX-0065C; CX-0653C; CX-0655C; CX-0676C; CX-0390C; CX-0705C; CX-0709C; CX-1125C (CAD); CX-1068C (CPX-0019C video); CX-1069C (CPX-0020C video); CX-1072C (CPX-0065C video)); (for [redacted] citing CPX-0058C; CX-0666C; CX-0536C; CX-1074C; CX-1124C (CAD)); (for [redacted] citing CPX-0052C; CX-0661C; CX-0591C; CX-0836C at 4; CPX-0012C; CX-1111C (CAD)).

Scruggs testified [redacted] Tr. (Scruggs) at 405:8-406:3, 406:23-407:18, 408:20-409:14, 410:5-24. [redacted] CPX-0146C; CPX-0146aC; CPX-0155C; CPX-0155aC; CPX-0020C; CPX-0020aC; CPX-0019C; CPX-0019aC; CPX-0065C; CPX-0065aC; CPX-0058C; CPX-0058aC; CPX-0052C; CPX-0052aC.

MASIMO 2042
Apple v. Masimo
IPR2024-00241

[redacted]

j. Element [8I]

The W1, [redacted] satisfy **[8I]** for the reasons shown above for '502 **[28M]**.

The [redacted] also satisfies **[8I]**. The [redacted] Tr. (Scruggs) at 405:8-406:3. [redacted]. CPX-0052C; CPX-0052aC.

k. Element [12]

The W1, [redacted] satisfy **[12]** for the reasons described above for '501 **[1PRE]** and **[1F]**.

4. Masimo Watch Products Satisfy '648 Patent Claims 24 and 30

Masimo demonstrated satisfaction of the DI technical prong for '648 Patent Claims 24 and 30 by a preponderance of the evidence. *See Alloc*, 342 F.3d at 1375. As described below, the W1, [redacted] all practice Claims 24 and 30.

a. Element [20PRE]

The W1, [redacted] satisfy **[20PRE]** for the reasons shown for '501 **[1PRE]**.

b. Element [20A]

The W1, [redacted] satisfy **[20A]** for the reasons shown above for '501 **[1A]**. The at least three light emitting diodes (LEDs) recited in '501 **[1A]** are a plurality of light emitting diodes (LEDs).

c. Element [20B]

The W1, [redacted] satisfy **[20B]** for the reasons shown above for '502 **[28C]**.

The [redacted] also satisfies **[20B]**. [redacted]

MASIMO 2042
Apple v. Masimo
IPR2024-00241

CDX-0011C.050 ( ) (for citing CPX-0052C; CX-0661C (photo); CX-0473C at 1, 3 (showing); CX-1111C (CAD)).

d. <u>Element [20C]</u>

The W1, satisfy **[20C]** for the reasons shown above for '501 **[1C]**.

e. <u>Element [20D]</u>

The W1, satisfy **[20D]** for the reasons shown above for '501 **[1D]** and '502 **[28G]**.

The also satisfies **[20D]** as shown above for '501 **[1D]** and '648 **[8F]**.

f. <u>Element [20E]</u>

The W1, satisfy **[20E]** for the reasons shown above for '501 **[1F]**.

MASIMO 2042
Apple v. Masimo
IPR2024-00241

[redacted]

g. <u>Element [24]</u>

The W1, [redacted] satisfy **[24]** for the reasons shown above for '501 **[1E]**. The opaque material forming the light block is configured to substantially prevent light piping.

h. <u>Element [30]</u>

The W1, [redacted] satisfy **[30]**. Tr. (Madisetti) at 726:2-14. The chamfered edge on the protrusion of these Masimo Watches is apparent from the physicals and the CAD files corresponding to the physicals.

[redacted]

CDX-0011C.067 (for W1 citing CPX-0146C; CX-1128C (CAD)) (for [redacted] citing CPX-0019C; CPX-0020C; CPX-0065C; CX-0814C (side profile photo); CX-1415C (same); CX-0812C (same); CX-1125C (CAD)) (for [redacted] citing CPX-0058C; CX-1058C at 445 (side profile photo); CX-1124C (CAD)) (for [redacted] citing CPX-0052C; CX-1111C (CAD)).

MASIMO 2042
Apple v. Masimo
IPR2024-00241

E. Validity

To challenge the validity of the Multi-Detector Patents, Apple's counsel promised during opening that "the timeline tells the tale for this patent and for others as well." Tr. (Apple Opening) at 51:20-21. But Apple's "tale" contradicts the contemporaneous evidence, which demonstrated the inventive features of the Asserted Claims and Apple's own struggles with these same features.

Indeed, Apple's Series 0, 1, 2, 3, 4, and 5 watches did not measure oxygen saturation. Tr. (Mannheimer) at 1013:7-20. Contemporaneous documents show multiple senior Apple engineers recognized invention would be required to add pulse oximetry. They , sought outside help, and even sought patent protection for what they viewed as innovative.[9]

After and perceived invention by a team of engineers and scientists, the world's largest company finally released an oxygen saturation sensor in the Apple Watch Series 6. To do so, Apple used a convex, pressure-inducing protrusion with openings from the interior of the sensor to the skin surface, and a light blocking matrix separating the optical components, along with an to shape the light to obtain red/IR overlap. Apple even sought patent protection for this device in 2016. These are precisely the features Apple challenges here. Thus, contrary to Apple's counsel's bold proclamation regarding the Asserted Patents that "every single part of these claims was old as the hills," Tr. (Apple Opening) at 57:7-16, Apple engineers thought otherwise.

[9] Masimo discusses this timeline in detail below as providing objective evidence of nonobviousness.

MASIMO 2042
Apple v. Masimo
IPR2024-00241

Against this timeline, Apple now asks the ALJ to accept that a POSITA in 2008 would have somehow found that a patent describing a wristwatch for biometric identification and authentication renders obvious the Asserted Claims of the Multi-Detector Patents for pulse oximetry. Apple's "tale" contradicts the evidence.

1. Apple's "State of the Art" Approach Demonstrates Its Hindsight Analysis

Apple's approach to the prior art confirms it failed to safeguard against improper hindsight. At the start of this Investigation, Apple served nearly 7,500 pages of invalidity contentions comprising dozens of references and claim charts. In its February 2022 Notice of Prior Art, Apple identified 160 references and three physical systems, while also "incorporating by reference … Apple's [7,000+ page] invalidity contentions …." Doc. ID 763304 at 1-10. In March 2022, Warren submitted an 858-page report asserting numerous invalidity-based grounds including rudimentary foam sensor heads made by his students that Warren pulled out of storage at the request of Apple's counsel ("Kansas State 6D"). Tr. (Warren) at 1262:18-1263:2. Indeed, Apple even included Kansas State 6D grounds in the proposed demonstrative slides it exchanged with Masimo's counsel, and after not presenting them, waited until five days after the hearing to withdraw them. Appendix B at 1.

Warren also presented background slides isolating the claimed features as if they were independent building blocks. For example, Warren presented slides labeled "State of the Art" for:

- "Three or More LEDs"
- "Three or More Sets of LEDs"
- "Four or More Photodiodes Including Quadrants"
- "Openings Over Photodiodes with Opaque Surfaces"

MASIMO 2042
Apple v. Masimo
IPR2024-00241

- "Combinations of LEDs, Photodiodes, and Openings"
- "Windows and Transmissive Coverings"
- "Protrusions Including Convex Protrusions"

Tr. (Warren) at 1190:3-1195:22; RDX-0008.5-RDX-0008.12. Apple's disregard for "the part-to-part relationships set forth in the claims and that give the claims their meaning" fails to establish invalidity. *Lindemann Maschinenfabrik v. Am. Hoist & Derrick*, 730 F.2d 1452, 1459 (Fed. Cir. 1984) (reversing obviousness determination). Apple cannot meet its burden to show invalidity based on its hunt for ***disjointed elements of the claimed features***. *See, e.g.*, *InTouch Techs., Inc. v. VGo Commc'ns., Inc.*, 751 F.3d 1327, 1351 (Fed. Cir. 2014) ("It appears that [the expert] relied on the … patent itself as her roadmap for putting what she referred to as pieces of a 'jigsaw puzzle' together."); *In re NTP, Inc.*, 654 F.3d 1279 (Fed. Cir. 2011) (improper to rely on hindsight reasoning to piece together elements to arrive at the claimed invention).

Warren even explained using a particular claim element as his starting point for learning about Lumidigm (RX-0411): "I found this patent when I was doing a recessed detector search online." Tr. (Warren) at 1204:2-5. But even after locating disparate features, he came up with no clear rationale to combine them into the claimed inventions, which exposes his hindsight-driven approach.

The evidence showed Masimo spent decades understanding the problems and developing solutions to extract the tiniest physiological signals from very noisy signals. The timeline of Apple's development and own patent filings confirms innovation in pulse oximetry is not merely assembling features from prior art references.

Apple could not solve its problems with a prior art search, as Warren seems to imply. In fact, even with Apple's vast resources, after tearing down Masimo products, and hiring

MASIMO 2042
Apple v. Masimo
IPR2024-00241

numerous Masimo engineers, Apple still took nearly six years to arrive at the design of the Series 6 back crystal for pulse oximetry. Apple and Warren's claim that such work would have been obvious to a POSITA over a decade earlier in 2008 with a much lower level of skill rewrites history as a "tale," with hindsight based on the claims as the guide.

2. Legal Standard

"Under the patent statutes, a patent enjoys a presumption of validity, *see* 35 U.S.C. § 282, which can be overcome only through facts supported by clear and convincing evidence …." *SRAM Corp. v. AD-II Eng'g, Inc.*, 465 F.3d 1351, 1357 (Fed. Cir. 2006). It is the accused infringer's burden to prove invalidity, and that burden of proof never shifts to the patentee. *Scanner Techs. Corp. v. ICOS Vision Sys. Corp. N.V.*, 528 F.3d 1365, 1380 (Fed. Cir. 2008). Anticipation requires that a single "prior art reference … disclose[s] all elements of the claim within the four corners of the document … 'arranged as in the claim.'" *Net MoneyIN, Inc. v. VeriSign, Inc.*, 545 F.3d 1359, 1369 (Fed. Cir. 2008) (citation omitted). Obviousness requires considering the four Graham factors and establishing that a POSITA would have been motivated to combine the teachings of references to achieve the claimed invention with a reasonable expectation of success. *See KSR Int'l Co. v. Teleflex Inc.*, 550 U.S. 398, 406-07 (2007); *Osram Sylvania, Inc. v. Am. Induction Techs., Inc.*, 701 F.3d 698, 706 (Fed. Cir. 2012). Where references were considered by the Patent Office or are cumulative of what was considered, the accused infringer has "the added burden of overcoming the deference that is due to a qualified government agency presumed to have properly done its job …." *Shire LLC v. Amneal Pharms., LLC*, 802 F.3d 1301, 1307 (Fed. Cir. 2015); *Roche Palo Alto LLC v. Ranbaxy Labs. Ltd.*, No. 3:06-cv-02003, 2009 WL 3261252, at *40 (D.N.J. Sept. 30, 2009) (citing *Al-Site Corp. v. VSI Int'l, Inc.*, 174 F.3d 1308, 1323 (Fed. Cir. 1999)).

MASIMO 2042
Apple v. Masimo
IPR2024-00241

[redacted]

3. Anticipation/Obviousness

On the final day of the evidentiary hearing, Apple finally revealed its actual prior art grounds–all stemming from Lumidigm (RX-0411). Lumidigm falls woefully short of disclosing the claimed features of the Multi-Detector Patents.

Apple presented six prior-art combinations based on Lumidigm. Apple attempts to maintain arguments of anticipation based on Lumidigm, obviousness based on Lumidigm alone, or obviousness based on Lumidigm and up to four other references. Indeed, Warren entitled his demonstrative slides "Lumidigm ***Invalidates*** the Asserted Claims" and then "Lumidigm Combinations Also ***Invalidate*** the Asserted Claims." RDX-0008.18 and RDX-0008.58.

Each argument fails. Lumidigm lacks many claim elements and thus, does not anticipate or render obvious any claim. Apple attempts to bridge the gap between Lumidigm's disclosure and the Asserted Claims with an assortment of obviousness grounds based on Lumidigm combined with Seiko 131, Cramer, Webster, and/or Apple 047. But Masimo submitted Seiko 131, Cramer, and Webster to the Patent Office. Examiners considered them before allowing the Asserted Patents, as shown in the chart below, which highlights the references considered by the Patent Office:

Grounds	Combinations	Asserted Claim(s)
1	Lumidigm	**'501** Claim 12 | **'502** Claims 22, 28 | **'648** Claims 12, 24, 30
2	Lumidigm + *Seiko 131* + *Cramer*	**'501** Claim 12 | **'502** Claims 22, 28 | **'648** Claims 12, 24, 30
3	Lumidigm + *Webster*	**'502** Claim 22
4	Lumidigm + *Seiko 131* + *Cramer* + *Webster*	**'502** Claim 22
5	Lumidigm + *Webster* + Apple 047	**'502** Claim 28
6	Lumidigm + *Seiko 131* + *Cramer* + *Webster* + Apple 047	**'502** Claim 28

CDX-0012C.007; Tr. (Madisetti) at 1329:10-12; *see* JX-0004 at 408 (#4–Cramer), 417 (#183–Webster), 433 (#177–Seiko 131); JX-0005 at 462 (#4–Cramer), 471 (#183–Webster), 405 (#177–Seiko 131); JX-0006 at 462 (#4–Cramer), 471 (#183–Webster), 484 (#177–Seiko 131).

MASIMO 2042
Apple v. Masimo
IPR2024-00241

Apple also ignores the evidence of teaching away from its combinations, fails to show that a POSITA would have been motivated to make the asserted combinations, and fails to articulate a reasonable expectation of success. Rather, Apple relies on conclusory statements divorced from the asserted combinations. Significant objective indicia also confirm the nonobviousness of the claims.

a. Ground 1 – Lumidigm Does Not Anticipate or Render Obvious Any Asserted Claim

Apple's Ground 1 Lumidigm arguments fall short of establishing invalidity of any claim of the Multi-Detector Patents.[10] Madisetti explained Lumidigm does not disclose or suggest many elements, including:

Lumidigm Does Not Disclose or Suggest At Least the Following Claim Features/Elements

- ✖ NO protrusion comprising a convex surface
- ✖ NO protrusion over/above an interior surface
- ✖ NO photodiodes disclosed
- ✖ NO "openings" or "through holes" in protrusion, or windows in openings
- ✖ NO disclosure of SpO_2 calculations or measurements
- ✖ NO cavities as claimed
- ✖ NO opaque lateral surface or opaque material configured to avoid or reduce light piping
- ✖ NO thermistor, adjustment responsive to temp.
- ✖ References hemoglobin or "oxygen levels in the blood" as "extended functionality"

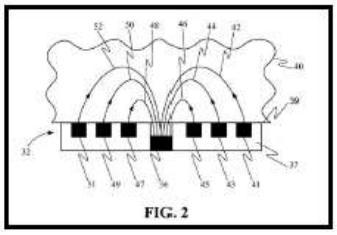

FIG. 2

RX-411

[10] On May 8, 2022, Apple represented it was "pursuing single-reference obviousness with respect to all remaining claims and anticipation with respect to all remaining claims ***except 502 claim 28***." Appendix A at 1. Apple thus withdrew anticipation for '502 Patent Claim 28. In its Pre-Hearing Brief (at 58-59), Apple then alleged that Lumidigm "invalidates" this claim generically. Then Warren opined on anticipation at the hearing (Tr. (Warren) at 1227:18-21; RDX-8.50). Regardless, Lumidigm does not anticipate any Asserted Claim, as shown herein.

MASIMO 2042
Apple v. Masimo
IPR2024-00241

[redacted]

Tr. (Madisetti) at 1329:14-1332:24; CDX-0012C.009. Apple's obviousness theories based on combining additional art with Lumidigm fail to supply the missing claim elements.

i. Lumidigm Does Not Disclose or Render Obvious a User-Worn Device Configured to Calculate, Determine, or Output Measurements of SpO_2 or Another Physiological Parameter

(Applies to: '501 [1PRE], [1F]; '502 [19PRE], [19E], [28PRE], [28I]; '648 [8G], [12], [20E])

Lumidigm discloses biometric identification and authentication systems, not devices to measure physiological parameters like oxygen saturation. Tr. (Madisetti) at 1330:20-1331:11. Lumidigm makes "no mention of oxygenation and/or hemoglobin levels, other than a broad discussion of what I call as aspirational extended functionality" and "no link to FIG. 8B" for the extended functionality. *Id*. Lumidigm describes a "determination of liveness" and explains that "to ensure security, the biometric determination task may include further tasks that ensure that the sample being measured is authentic and being measured on a living being." RX-0411 at 1:60-64. This is based on obtaining "wavelength ranges containing spectral features and combination of spectral features that are unique to the individual." RX-0411 at 5:30-33.

Warren emphasized the phrases "user-worn device" and "physiological parameter" in his demonstrative slide for this claim limitation. RDX-0008.23. He failed to identify anything from Lumidigm allegedly showing how it is "configured to noninvasively measure a physiological parameter." Tr. (Warren) at 1208:1-13. Warren stated merely that "Lumidigm teaches this explicitly through, we'll say Figure 8B as an example, which is a wristwatch embodiment." *Id.* He did not explain how the Lumidigm Figure 8B wristwatch noninvasively measures a ***physiological parameter,*** because it does not.

Lumidigm does not disclose or suggest a user-worn device configured to noninvasively "measure"/"determine measurements of" oxygen saturation ('502 **[19PRE]**, **[28PRE]**, **[28I]**;

MASIMO 2042
Apple v. Masimo
IPR2024-00241

[redacted]

’648 **[12]**) or a “physiological parameter” (’501 **[1PRE]**; ’648 **[8PRE]**, **[20PRE]**). For the same reasons, Lumidigm also does not disclose or suggest “one or more processors” configured to “calculate a measurement of the physiological parameter” (’501 **[1F]**), or “calculate”/“output”/“determine measurements” of “oxygen saturation” (’502 **[19E]**, **[28I]**; ’648 **[8G]**, **[12]**, **[20E]**).

Apple relies on Lumidigm’s FIG. 8B wristwatch as a user-worn device. Tr. (Warren) at 1208:1-13. But Lumidigm describes that wristwatch as identifying a user or authorizing them to do something using “tissue spectral data.” RX-0411 at 10:42-59, 5:30-44, 11:15-28; 11:60-61. The spectral data has a “signature” unique to an individual. *Id.* at 5:30-49, 10:11-21. The FIG. 8B embodiment “operates based upon signals detected from the skin in the area of the wrist.” *Id.* at 11:60-64. But that merely explains how the system identifies a user with biometric data. *Id.* at 10:42-59. Operating “based upon signals detected from the skin” does not disclose or suggest determining oxygen saturation or any other physiological parameter. *Id.* at 11:60-12:2; Tr. (Madisetti) at 1340:17-25, 1341:8-12. Lumidigm made no such parameter measurement device. CX-0279C (Rowe) at 118:4-119:8.

Warren asserts the FIG. 8B embodiment may be used with “any of the sensor geometries previously disclosed,” which he interprets as “meaning all of the other embodiments in Figures 1 through 7 as well as the information that’s in the text itself.” Tr. (Warren) at 1208:8-13. But Lumidigm’s “sensor geometries” refer to the sensors shown in “***FIGS. 3 through 7.***” Tr. (Rowe) at 1152:7-21. Even if one were to accept Warren’s incorrect assertion, Lumidigm’s reference to “sensor geometries previously disclosed” still would not disclose or suggest the biometric identifier of FIG. 8B is “configured to noninvasively measure a physiological parameter.” RX-0411 at 11:60-12:2.

MASIMO 2042
Apple v. Masimo
IPR2024-00241

Second, with respect to '502 **[19PRE], [19E], [28PRE], [28I],** and '648 **[12]** and **[20E]**, Apple relies on the "extended functionality" section of Lumidigm as allegedly disclosing a user-worn device configured to non-invasively measure oxygen saturation. Tr. (Warren) at 1215:18-1216:9; RDX-0008.35. Warren testified the FIG. 8B "wristwatch performs … extended functionality as a portable device that's mentioned later in the specification" in Column 19. Tr. (Warren) at 1215:24-1216:9. But Lumidigm fails to link FIG. 8B to its description of "extended functionality," nor does it disclose, suggest, or motivate "a user-worn device configured to" to make the claimed ***measurements*** of oxygen saturation or a physiological parameter. Tr. (Madisetti) at 1330:6-8, 1330:20-1331:11, 1340:17-1341:14.

The passing mention of hemoglobin in column 19 appears eight columns after the wristwatch in a discussion of "extended functionality." RX-0411 at 19:16-28. Lumidigm's "extended functionality" section begins at 17:60 and continues to 24:25. It lists a wide variety of aspirational concepts including a fruit ripeness monitor, counterfeit currency detector, lie detector, stress detector, paint color matcher, barcode scanner, entertainment functions including games like "SIMON," a "mood meter," motion detector, smoke detector, laser pointer, a trickle charger, a tanning, complexion, toxicity, alcohol, bilirubin and hemoglobin monitor, an ambient-light-sensor, a personal-security function and other ***functions***. *Id.* at 17:60-24:25. Rowe revealed at the hearing that the "extended functionality" resulted from a "brainstorming session" by the inventors rather than any actual work done (or attempted) by Lumidigm. Tr. (Rowe) at 1146:18-1147:3. Thus, it should be no surprise that Lumidigm's "extended functionality" section provides no technical description about how the concepts work or the structure they might require. *See* RX-0411 at 17:60-24:25. Lumidigm never made a device calculating oxygen saturation. CX-0279C (Rowe) at 118:4-119:8. When asked how a pulse oximeter measured

MASIMO 2042
Apple v. Masimo
IPR2024-00241

[redacted]

oxygen in the blood at the time of the Lumidigm patent application, Rowe explained pulse oximetry was not their technical focus. *Id.* at 42:14-43:4. Once it became apparent that Rowe could not support Apple's interpretation of Lumidigm, Apple promptly cut short his brief examination.

Apple focuses on the mention in the long list of "extended functionality" of a "hemoglobin monitor" function, which allegedly "correlates" spectral data with "oxygenation and/or hemoglobin levels in the blood." Tr. (Warren) at 1215:18-1216:9; RDX-8.35. There is no evidence Lumidigm disclosed or suggested how to do this. Lumidigm cannot anticipate the claims because it does not actually disclose the element "as recited in the claims." *TF3 Ltd. v. Tre Milano, LLC*, 894 F.3d 1366, 1374 (Fed. Cir. 2018) (internal citation omitted) (reversing anticipation finding); Apple PHB at 45, 51 ("a POSITA would have understood that Lumidigm's [FIG. 8B] wristwatch embodiment ***can include***" the ability or "***can be used***" to measure oxygen saturation or a physiological parameter). Moreover, Warren's conclusory testimony that a POSITA in 2008 would have known how to implement pulse oximetry functionality in a watch is at odds with the testimony of Apple's engineers, who worked for years to implement this difficult and complex feature. As Apple's own experienced pulse oximetry engineer explained, in 2015, pulse oximetry at the wrist would require invention, and questioned whether it could even be done. CX-0177C at 13.

Warren also admitted that Lumidigm's "extended functionality" is merely "mentioned" in column 19, which provides "two references to a hemoglobin monitor." Tr. (Warren) at 1215:18-1216:7.[11] But as Madisetti explained, "none of these very vague mentions of hemoglobin link it

[11] Warren also stated that column 19 of Lumidigm references "a system" that can measure oxygenation or hemoglobin levels in the blood (Tr. (Warren) at 1216:7-9), but in addition to

MASIMO 2042
Apple v. Masimo
IPR2024-00241

to [the] FIG. 8[B] embodiment." Tr. (Madisetti) at 1330:24-1331:2; CDX-0012C.010. Madisetti also explained that oxygenation and hemoglobin levels are only addressed in Lumidigm's "broad discussion" of the "aspirational extended functionality" discussed above, which has "no link to FIG. 8B." Tr. (Madisetti) at 1331:3-6. Because there is no link between the FIG. 8B embodiment and Lumidigm's "extended functionality," Lumidigm provides no disclosure or suggestion that the FIG. 8B (or any) embodiment "is configured to" noninvasively measure oxygen saturation or any physiological parameter. *Id.* at 1331:3-8, 1340:20-1341:1, 1341:8-12.

The mere possibility of performing additional measurements is insufficient to inherently disclose the FIG. 8B embodiment is "configured to noninvasively measure" oxygen saturation or a physiological parameter. *Guangdong Alison Hi-Tech Co. v. Int'l Trade Comm'n*, 936 F.3d 1353, 1364 (Fed. Cir. 2019) ("An element may be inherently disclosed only if it 'is 'necessarily present,' not merely probably or possibly present, in the prior art.'") (internal citations omitted).

Accordingly, Apple fails to establish by clear and convincing evidence that Lumidigm discloses or suggests "a user-worn device configured to" measure oxygen saturation or a physiological parameter. For the same reasons, Apple has not met its burden to show Lumidigm discloses or suggests the FIG. 8B embodiment includes "one or more processors" configured to calculate, determine, or output measurements of oxygen saturation or a physiological parameter, which is also required by each of the asserted Multi-Detector-Patent claims.

A POSITA also would not have known how to combine Lumidigm's FIG. 8B embodiment with the mention of hemoglobin monitoring functionality Apple relies on as teaching the measurement of oxygen saturation or a physiological parameter. Tr. (Madisetti) at

---

being incorrect, the contention that Lumidigm discloses or suggests such "a system" is not in Apple's Pre-Hearing Brief and is thus waived under G.R. 9.2. Apple PHB at 45-46, 51-52.

MASIMO 2042
Apple v. Masimo
IPR2024-00241

1340:20-1341:14. Warren testified a POSITA ***could*** have implemented pulse oximetry in the FIG. 8B embodiment but failed to explain what ***would*** have motivated a POSITA to do so or ***how*** such a POSITA would do so. Tr. (Warren) at 1215:18-1216:19. This incomplete analysis fails to show obviousness. *See*, *e.g.*, *Adidas AG v. Nike, Inc.*, 963 F.3d 1355, 1359 (Fed. Cir. 2020) ("The obviousness inquiry does not merely ask whether a skilled artisan could combine the references, but instead asks whether they would have been motivated to do so."), *cert. denied*, 141 S. Ct. 1376 (2021). Certainly, it was not obvious to the team of Apple engineers, one of whom had decades of pulse oximetry development experience.

Finally, a POSITA would not have had a reasonable expectation of success in combining the FIG. 8B embodiment with the "extended functionality." Tr. (Madisetti) at 1330:6-8, 1330:20-1331:11, 1340:17-1341:14. Warren and Apple never explained a reasonable expectation of success combining these Lumidigm's embodiments. Apple PHB at 45-46, 51-52. Per G.R. 9.2, Apple cannot do so now. Presumably, this is because Apple recognizes Lumidigm fails to explain how to implement the list of brainstorming functions in its "extended functionality" section. RX-0411 at 17:60-24:25. Without such a showing, Apple has not established by "clear and convincing evidence that a skilled artisan … would have had a reasonable expectation of success." *ActiveVideo Networks, Inc. v. Verizon Commc'ns, Inc.*, 694 F.3d 1312, 1327 (Fed. Cir. 2012). And Mannheimer's reaction to being asked to measure pulse oximetry on the wrist in 2014, of an eye roll and "good luck with that," contradicts Warren's hindsight opinion that a POSITA would find doing so obvious from Lumidigm's disclosure of a biometric identifier years earlier. Tr. (Mannheimer) at 1012:12-16.

ii. <u>No Disclosure of Photodiodes or Motivation to Include Them</u>

(<u>Applies to</u>: '501 [1B], '502 [19B], [28C]; '648 [8C], [20B])

MASIMO 2042
Apple v. Masimo
IPR2024-00241

Lumidigm does not expressly disclose the photodiodes required by each Asserted Claim. Tr. (Madisetti) at 1329:25-1330-2. It states detector 36 "can include" certain materials, such as "PbS, PbSe, InSb, InGaAs, MCT, bolometers" or silicon. RX-0411 at 6:54-63. Warren does not dispute Lumidigm's failure to expressly disclose a "photodiode." Tr. (Warren) at 1208:25-1209:17. And, his opinion it would have been "obvious" (*Id.* 1209:17) cannot establish anticipation. *Trintec Indus.*, *Inc. v. Top-U.S.A. Corp.*, 295 F.3d 1292, 1295 (Fed. Cir. 2002) (inherent disclosure "requires that the missing descriptive material is 'necessarily present,' ***not merely probably or possibly present***, in the prior art." (citation omitted)).

Warren also failed to provide any reason to combine a photodiode with the FIG. 8B wristwatch, much less any reason to add the three or more photodiodes required by the claims. Tr. (Warren) at 1208:25-1209:17. The absence of any obviousness analysis relating to photodiodes is a fatal flaw to Ground 1. The same flaw exists in Grounds 2-6 because Apple assumes detectors are photodiodes and does not rely on other references to supply photodiodes or provide any reasoning in connection with Grounds 2-6 to add photodiodes to Lumidigm. *See* RDX-0008.37, 44, 54, 66, 69, 79, 82 (relying on Lumidigm for photodiodes).

iii. <u>No Disclosure or Suggestion of a Protrusion Comprising a Convex Surface</u>

(<u>Applies to</u>:'501 [1C], [12]; '502 [19C], [28E]; '648 [8D], [20C])

Lumidigm does not disclose, teach or suggest a protrusion comprising a convex surface required by the Asserted Claims.

First, the experts agree Lumidigm's sensor head 32 has a flat sensor surface 39.

MASIMO 2042
Apple v. Masimo
IPR2024-00241

[redacted]

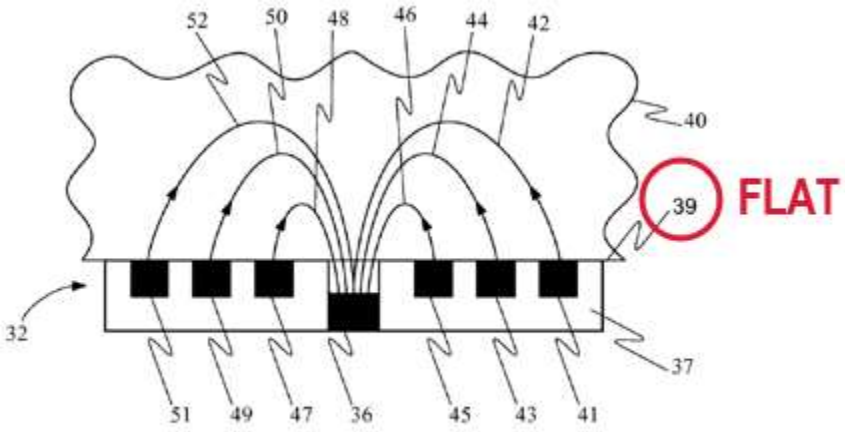

FIG. 2

CDX-0012C.011; Tr. (Warren) at 1264:24-1265:21 (admitting sensor head 32 is "flat," does not include "a curvature," and "is indeed straight"); Tr. (Madisetti) at 1331:15-16. Lumidigm's sensor head 32 lacks any protrusion, much less a protrusion comprising a convex surface. Tr. (Madisetti) at 1331:12-16.

Apple argues that Lumidigm's sensor head 32 ***could be modified*** to include a convex compound curvature. Tr. (Warren) at 1210:13-1211:8; 1214:16-1215:4 ("the compound curvature … ***could*** be incorporated into an embodiment … such as [FIG.] 8B"). Apple relies on ***one sentence*** in Lumidigm (RX-0411 at 7:57-63) that states "[t]he sensor head 32 may also have a compound curvature on the optical surface." RDX-0008.27; Tr. (Warren) at 1210:13-21. But, Lumidigm refers to the "***optical surface***"—not the sensor surface 39. RX-0411 at 7:58-63; Tr. (Madisetti) at 1331:12-23, 1332:9-12; CDX-0012C.011. Warren failed to explain any reason why the "optical surface" ***would*** be the "sensor surface 39." Tr. (Warren) at 1210:14-1211:8.

Moreover, the "compound curvature" Apple relies on is mentioned in only one sentence relating to FIG. 2. RX-0411 at 7:58-63. No figure illustrates the compound curvature, much less a protrusion comprising a convex surface. RX-0411 at FIGS. 1-11; Tr. (Madisetti) at 1329:19-23, 1331:12-16. Indeed, the compound curvature in Lumidigm describes what is more likely a

MASIMO 2042
Apple v. Masimo
IPR2024-00241

concave surface. Tr. (Madisetti) at 1331:20-1332:8, 1339:5-7. Indeed, Rowe confirmed the "compound curvature" referred to a concave surface. CX-0279C (Rowe) at 69:8-21.

Warren tried to fill the missing element with his opinion that "a convex curvature itself ***could*** be a useful element." Tr. (Warren) at 1211:4-6. But Warren identified no embodiment having a convex surface. *Id.* at 1210:12-1211:8, 1214:16-1215:4; RX-0411 at 7:58-63. The mere possibility of adding a compound curvature because Warren thinks it "could be a useful element" cannot establish inherent disclosure of a protrusion comprising a convex surface. *Guangdong*, 936 F.3d at 1364.

Second, Apple and Warren incorrectly contend that "any of the sensor geometries previously disclosed" refers to the sensors of FIGS. 1-7 and the accompanying text. Tr. (Warren) at 1208:1-13, 1214:16-1215:4. But Lumidigm states merely that "FIG. 8B again shows the equidistant-sensor geometry of FIG. 4 for illustration purposes only; more generally, any of the sensor geometries previously disclosed or other equivalent configurations can be used for this application." RX-0411 at 11:65-12:2 That statement relates only to arrangements of light sources and detectors *illustrated* in the figures. Lumidigm provides further context by explaining, for example, "The variable-spacing sensor geometry described with respect to FIG. 3 is used to illustrate one form of the biometric reader 132, in this case having light sources distributed elliptically about the detector …." RX-0411 at 12:26-32; *id.* at 12:9-14, 12:44-48. Nothing in Lumidigm refers to the "accompanying text" as "sensor geometries." And, "any of the sensor geometries previously disclosed" refers only to the sensors shown in "***FIGS. 3 through 7.***" Tr. (Rowe) at 1152:7-21. There is no disclosure or suggestion to add any type of compound curvature, much less specifically a convex protrusion, to FIG. 8B.

MASIMO 2042
Apple v. Masimo
IPR2024-00241

[redacted]

iv. No Motivation or Expectation of Success for a Protrusion Comprising a Convex Surface

(Applies to Grounds 1-6 for: '501 [1C], [12]; '502 [19C], [28E]; '648 [8D], [20C])

A POSITA would not have been motivated to combine the FIG. 8B embodiment with a protrusion comprising a convex surface. The art taught away from such a combination.

First, a POSITA would have understood the prior art taught away from placing a protrusion comprising a convex surface with a reflectance-type sensor. Tr. (Madisetti) at 1338:6-13; CDX-0012C.013. For example, Mendelson '799 states:

> [V]ariations in contact pressure between the sensor and the skin can cause larger errors in reflection pulse oximetry (as compared to transmission pulse oximetry) since some of the blood near the superficial layers of the skin may be normally displaced away from the sensor housing towards deeper subcutaneous structures. Consequently, the highly reflective bloodless tissue compartment near the surface of the skin can cause large errors even at body locations where the bone is located too far away to influence the incident light generated by the sensor.

CX-1733 at 2:47-57. Madisetti explained that "[a]dding a protrusion comprising a convex surface would add excessive pressure to the measurement site and displace blood away from the sensor, which was known to cause measurement errors." Tr. (Madisetti) at 1338:6-13; CDX-0012C.013. He explained Mendelson '799 "discourages [a POSITA] and provides no motivation or an expectation of success that the combination would actually work or have a reasonable expectation of success." Tr. (Madisetti) at 1338:14-1339:4.

Second, the alleged benefits of Lumidigm's compound curvature provide no reason to add a protrusion comprising a convex surface to the wristwatch of FIG. 8B. Lumidigm states that a compound curvature could be used to "match the profile of a device in which it is mounted" or to "incorporat[e] ergonomic features that allow good optical and mechanical coupling with the tissue being measured." RX-0411 at 7:58-63. However, as Madisetti explained, if a compound curvature was used to match the profile of a wristwatch like FIG. 8B,

MASIMO 2042
Apple v. Masimo
IPR2024-00241

"it would have a concave curvature at best." Tr. (Madisetti) at 1331:20-25. And, as mentioned above, Rowe also testified that the "compound curvature" would likely be concave. CX-0279C (Rowe) at 69:8-21.

Improving coupling also would not have motivated a POSITA to combine the FIG. 8B embodiment with a convex compound curvature. Madisetti explained a POSITA would not have expected the proposed combination to improve the coupling of the FIG. 8B embodiment with the user's skin. Tr. (Madisetti) at 1331:20-1332:8. Rowe conceded that, if anything, a ***concave*** compound curvature on the sensor head—not convex—would better "approximate the surface of the skin" and thus provide better coupling. CX-0279C (Rowe) at 69:8-21. Madisetti further explained adding a convex compound curvature would make the FIG. 8B embodiment "less comfortable," which is "not align[ed] with Lumidigm's goal" of "incorporating ergonomic features." Tr. (Madisetti) at 1339:19-1340:3; RX-0411 at 7:58-63; Tr. (Warren) at 1210:18-1211:1 ("incorporat[ing] ergonomic features" refers to "comfort and usability"). In contrast, Warren testified without explanation that a POSITA "would see the words 'compound curvature' and realize that a practical implementation of this would be a convex surface." Tr. (Warren) at 1211:6-8. Warren failed to address the evidence that a protrusion comprising a convex surface (including the alleged protrusions of Lumidigm, and Cramer and Seiko 131 (both discussed below)) would not be added to the FIG. 8B wristwatch to match its profile, improve its coupling, or improve its ergonomics/comfort. *Id.* at 1210:14-1211:8, 1233:1-14.

Third, as Madisetti explained, "adding a protrusion comprising a convex surface would undesirably also add to the form factor" of the FIG. 8B wristwatch. Tr. (Madisetti) at 1339:8-12; CDX-0012C.013. And Apple conceded the desire to "have the smallest and thinnest form factor possible." Apple PHB at 197. Warren did not rebut this evidence.

MASIMO 2042
Apple v. Masimo
IPR2024-00241

Fourth, a POSITA would not have had a reasonable expectation of success combining a "compound curvature" or the alleged protrusions of Seiko 131 and/or Cramer (both discussed in Section III.E.3.b, *infra*) with the Fig. 8B wristwatch. Tr. (Madisetti) at 1338:2-1339:12, 1339:19-23; CDX-0012C.0013-14. For Ground 1, Apple provided no analysis or argument regarding expectation of success, and per G.R. 9.2 cannot do so now. Apple PHB at 45-70. The only other alleged protrusions that Apple proposes combining come from Seiko 131 and Cramer. Tr. (Warren) at 1232:10-1233:14; RDX-0008.66-67. Apple and Warren failed to articulate any expectation of success specific to the asserted combinations of features from Lumidigm, Seiko 131, and Cramer. Apple PHB at 83-84; Tr. (Warren) at 1238:1-6. Apple's conclusory assertions are not "clear and convincing evidence that [a POSITA] would have had a reasonable expectation of success" in the proposed combination. *ActiveVideo*, 694 F.3d at 1327.

Apple also never explained *how* the alleged protrusion of Lumidigm, Seiko 131, or Cramer would be combined with the FIG. 8B embodiment, and per G.R. 9.2 cannot do so now. *See* Apple PHB at 45-84. Apple and Warren have never explained what features of Fig. 8B would be modified, where the alleged convex protrusion would be located, or how it would work with, or why it would benefit Lumidigm's biometric identification system. *See id.*; Tr. (Warren) at 1210:13-1211:8, 1214:16-1215:4, 1232:10-1233:14, 1237:4-1238:6. This deficiency is dispositive. *See, e.g.*, *Personal Web Techs., LLC v. Apple, Inc.*, 848 F.3d 987, 993-94 (Fed. Cir. 2017) (remanding obviousness finding where Apple failed to provide any explanation as to "how the combination of the two references was supposed to work"); *Hynix Semiconductor Inc. v. Rambus Inc.*, 645 F.3d 1336, 1353 (Fed. Cir. 2011) (affirming nonobviousness finding where "it was unclear whether the combination would be beneficial or detrimental"; confirming "[h]ow well a combination is expected to work is certainly a legitimate consideration ….").

MASIMO 2042
Apple v. Masimo
IPR2024-00241

The reasons a POSITA would not have been motivated to combine or had a reasonable expectation of success in combining a protrusion comprising a convex surface with FIG. 8B of Lumidigm apply equally to Apple's arguments based on Lumidigm and Lumidigm in combination with Seiko 131 and/or Cramer. Tr. (Madisetti) at 1339:18-23; CDX-0012C.013-014.

Fifth, the combination of a compound curvature with the FIG. 8B embodiment, even if achieved, would still lack the other claim elements not disclosed by Lumidigm. Tr. (Madisetti) at 1340:17-1343:17; CDX-0012C.009; CDX-0012C.030-31; *PAR Pharm., Inc. v. TWI Pharms., Inc.*, 773 F.3d 1186, 1194 (Fed. Cir. 2014) (accused infringer bears "burden to prove that ***all claimed limitations*** are disclosed in the prior art").

v. No Disclosure, Suggestion, or Motivation for a Protrusion Over or Above an "Interior Surface"

(Applies to: '501 [1B], [1C]; '502 [28C], [28E])

The claims require that the photodiodes are arranged on an "interior surface" and/or that a protrusion is arranged over or above or aligned with the "interior surface." Lumidigm does not disclose or suggest a protrusion arranged over, above or aligned with an interior surface.

First, Warren failed to identify any interior surface in Lumidigm because there is none. Tr. (Warren) at 1209:19-1210:11; RDX-0008.26.

MASIMO 2042
Apple v. Masimo
IPR2024-00241

[redacted]

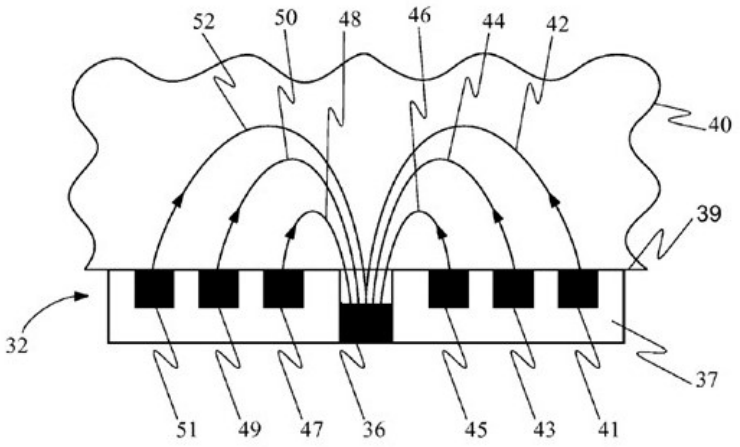

FIG. 2

RX-0411 at FIG. 2. Because Lumidigm lacks the claimed interior surface, Madisetti explained that it "has no protrusion at all over an interior surface." Tr. (Madisetti) at 1329:24-25.

Second, Apple contends that Lumidigm's "compound curvature on the optical surface" would apply to sensor surface 39. Tr. (Warren) at 1233:1-9; Apple PHB at 48. The specification contains no such disclosure. *Supra* Section III.E.3.a.iii. But even assuming that a "compound curvature" was applied to sensor surface 39, "[a]ll that is disclosed is some sort of movement of this surface 39 up or down." Tr. (Madisetti) at 1332:16-17. Adding a curvature to sensor surface 39 would not change the rest of the sensor head 32 such that the alleged photodiode 36 was arranged on an interior surface or the added curvature was "over"/"above" an interior surface. As Madisetti explained, adding a curvature to sensor surface 39 "does not make a protrusion" and "does not make an interior surface that's distinct from a protrusion." *Id.* at 1332:16-19.

Warren testified that the claim recites an interior surface that "is the surface that holds the [light] sources and detectors." Tr. (Warren) at 1210:14-17. But Lumidigm's sensor head has no singular surface holding both the light sources (41, 43, 45, 47, 49, 51) and detector (36). RX-

MASIMO 2042
Apple v. Masimo
IPR2024-00241

[redacted]

0411 at FIG. 2. Apple also failed to identify an "interior surface" in Lumidigm, Apple PHB at 47-49, and per G.R. 9.2 cannot do so now.

vi. <u>No "Openings"/"Through Holes" in Protrusion, or "Windows"/"Optically Transparent Material" Therein</u>

(<u>Applies to</u>: '501 [1D], '502 [19C+19D], [28F+28G]; '648 [8E], [20D+20E])

Every Asserted Claim requires "openings"/"through holes" in the protrusion comprising a convex surface that are "over"/"above"/"aligned with" the photodiodes. Most of the claims also require "windows"/"optically transparent material" in the protrusion openings. But as explained above, Lumidigm does not disclose or suggest a protrusion comprising a convex surface, nor would a POSITA have been motivated to combine that feature with the FIG. 8B embodiment. *Supra* Sections III.E.3.a.iii-iv. Thus, for the same reasons, Lumidigm does not disclose or render obvious openings or through holes in a protrusion comprising a convex surface, or "windows"/"optically transparent material" in such openings.

Apple contends the vaguely mentioned "optical relay" in Lumidigm discloses a "window"/"optically transparent material." Tr. (Warren) at 1221:16-1222:9; RDX-0008.38. Not so. Lumidigm's "optical relay" is not shown anywhere, and the specification does not suggest including it in the FIG. 8B embodiment. RX-0411 at 8:19-26. Further, Lumidigm states the "optical relay" would "relay" or "transfer" light from one location to another, for example with a "fiber optic face plate," "fiber bundle," or "optical relay units." *See id.* at 8:19-32. A POSITA would not have understood Lumidigm's optical relay to disclose "windows" or "optically transparent material" to be included in openings over detectors. Tr. (Madisetti) at 1330:2-5, 1343:1-4.

Further, Warren testified that in RDX-0008.38, he "illustrated, for example, a well-known optical relay, which is a lens." Tr. (Warren) at 1222:1-2. However, Lumidigm does not

MASIMO 2042
Apple v. Masimo
IPR2024-00241

describe a "lens" as an example of an optical relay. RX-0411 at 8:19-32. Furthermore, Apple never previously contended that an optical relay included a "lens", and per G.R. 9.2 such an undisclosed contention is waived. Apple PHB at 55-56.

vii. No Disclosure or Motivation for Opaque Lateral Surface or Opaque Material Configured to Avoid/Reduce Light Piping

(Applies to: '501 [1E]; '502 [28F]; '648 [24])

Each of the above-identified claim elements require the protrusion or its openings include an opaque lateral surface or opaque material configured to avoid or reduce light piping. The Multi-Detector Patents explain an example of light piping is "light that bypasses [the] measurement site." JX-0001 at 22:48-50.

Lumidigm has "no opaque lateral surface or opaque material configured to avoid or reduce light piping." Tr. (Madisetti) at 1330:9-12. Apple relies on Lumidigm's mention of "minimiz[ing] the amount of light that can be detected ***after reflecting off the first (epidermal) surface***." RDX-0008.29 (citing RX-0411 at 8:1-11); Apple PHB at 49. But such discussion focuses on light after contacting the tissue, and thus does not concern light piping. Apple also failed to identify any motivation to add the claimed opaque lateral surfaces or opaque material configured to avoid light piping. Apple PHB at 49-50, 62. However, as Madisetti explained, "Lumidigm … fail[s] to recognize light piping as a problem at all or motivate a solution to address it." Tr. (Madisetti) at 1340:8-10. He further explained "[a]ny discussion in Lumidigm is not a discussion of the light piping problem" because Lumidigm refers to light reflecting off "the surface of the skin." *Id.* at 1340:10-12; RX-0411 at 7:64-8:18.

Warren testified incorrectly that the only teaching in the Multi-Detector Patents for reducing or avoiding light piping was "using opaque materials." Tr. (Warren) at 1203:3-5. But the specification describes other examples for addressing light piping, including, for example, a

MASIMO 2042
Apple v. Masimo
IPR2024-00241

[redacted]

noise shield and added height of the protrusion comprising a convex surface. *See, e.g.*, JX-0001 at 25:50-60, 37:42-52.

viii. No Disclosure or Motivation for a Thermistor or Adjusting Device Operation Responsive to Temperature Signal

(Applies to: '502 [20], [21], [28D], [28I])

The above-identified claim elements each require a thermistor. Claim 21 of the '502 Patent requires adjusting device operation in response to the temperature signal from a thermistor. Lumidigm does not disclose or render obvious these elements.

Lumidigm lacks a thermistor. Tr. (Madisetti) at 1330:13-15. Apple relies on Lumidigm's mention of "performing explicit corrections to account for … environmental influences of temperature"—in two sentences concerning biometric "Enrollment Functions." Tr. (Warren) at 1223:1-20 (referring to RX-0411 at 14:21-29 for these elements). But Lumidigm does not disclose or suggest a thermistor, nor a processor configured to adjust operation based on a temperature signal. RX-0411 at 14:21-29; Tr. (Madisetti) at 1330:13-15. Lumidigm's FIG. 9 discussion says nothing about adjusting the operation of any device in response to a temperature signal. RX-0411 at 12:56-13:4, FIG. 9.

Warren testified that "a [POSITA] would realize that such a temperature measurement ***could*** easily be done with a thermistor." Tr. (Warren) at 1223:13-20. But Lumidigm does not disclose a temperature measurement, and Warren provided no reason for a POSITA to combine any embodiment with a thermistor to take a temperature measurement. *Id.* Moreover, Warren's testimony about what "could easily be done" fails to show obviousness. *See*, *e.g.*, *Adidas*, 963 F.3d at 1359 ("The obviousness inquiry does not merely ask whether a skilled artisan could combine the references, but instead asks ***whether they would have been motivated to do so***.").

MASIMO 2042
Apple v. Masimo
IPR2024-00241

[redacted]

ix. No Disclosure, Suggestion, or Motivation of Claimed Cavities

(Applies to: '502 [28H])

'502 Patent **[28H]** recites "at least one opaque wall extending between the interior surface and the protrusion, wherein at least the interior surface, the opaque wall, and the protrusion form cavities …." As explained above, Lumidigm does not disclose or suggest (1) a protrusion comprising a convex surface or (2) an interior surface, nor would a POSITA have been motivated to combine those features with the FIG. 8B embodiment. *Supra* Sections III.E.3.a.iii-v. Thus, Lumidigm does not disclose or render obvious the claimed "cavities" because they are defined by the protrusion comprising a convex surface and interior surface.

x. Lumidigm Fails to Render Obvious a Network Interface, User Interface Comprising a Touch-Screen, or Storage Device As Claimed

(Applies to: '502 [28J], [28K], [28L])

The '502 Patent recites "a network interface configured to wirelessly communicate … [to] a mobile phone or an electronic network" **[28J]**, "a user interface comprising a touch-screen display … configured to display" **[28K]**, and "a storage device configured to at least temporarily store" the oxygen-saturation measurement **[28L]**. Lumidigm fails to disclose or suggest the "network interface," "user interface," or "storage device" configured as claimed. For each of these elements, Apple relies on the separate "computer system" shown in FIG. 9 of Lumidigm. Tr. (Warren) at 1226:9-1227:14. However, Lumidigm explains the features shown in the FIG. 9 computer system would ***not*** be included in "smaller systems that are integrated with portable devices" like the FIG. 8B wristwatch. RX-0411 at 12:56-61. As Madisetti confirmed, Lumidigm does not mention the claimed "network interface, touchscreen, [and] memory." Tr. (Madisetti) at 1343:8-11; CDX-0012C.031.

MASIMO 2042
Apple v. Masimo
IPR2024-00241

Warren testified that Lumidigm FIGS. 8D-8E smartphone and PDA "embodied" a touch-screen. Tr. (Warren) at 1226:23-1227:3. Warren alleged such a feature "***can***" or "***could*** also be incorporated in a watch" like FIG. 8B. Tr. (Warren) at 1226:9-1227:14. But Warren never explained what ***would*** have motivated a POSITA to combine the claimed network interface, user interface, or storage with the FIG. 8B embodiment to communicate, display, or store the results of an oxygen-saturation measurement that Lumidigm, as explained above in Section III.E.3.a.i, does not take. *Adidas*, 963 at 1359; *see* Tr. (Madisetti) at 1337:15-19.

xi. Lumidigm Fails to Disclose or Render Obvious "The Protrusion Further Comprising One or More Chamfered Edges"

(Applies to: '648 Patent Claim 30)

'648 Patent Claim 30 recites "The user-worn device of Claim 20, wherein the protrusion further comprises one or more chamfered edges." Lumidigm fails to disclose or render obvious '648 Patent Claim 30 for each of the reasons explained in this section ('648 **[20PRE], [20B], [20C], [20D],** and **[20E]**) or render obvious the user-worn device of Claim 20. Lumidigm fails to invalidate this claim for additional reasons.

First, as explained above, Lumidigm does not disclose or suggest (1) a protrusion comprising a convex surface, and (2) a POSITA would not have been motivated to combine that feature with the FIG. 8B embodiment. *Supra* Sections III.E.3.a.iii-iv. For the same reasons, Lumidigm does not disclose, suggest, or render obvious "*the protrusion further comprising* one or more chamfered edges."

Second, Warren argues the ***front*** face of the FIG. 8B wristwatch teaches the "one or more chamfered edges." Tr. (Warren) at 1228:24-1229:4; RDX-0008.56. Warren thus ignores the claim's requirement that "the ***protrusion further comprise***[] one or more chamfered edges."

MASIMO 2042
Apple v. Masimo
IPR2024-00241

Conversely, Madisetti expressly applied the claim language to confirm "a protrusion further comprising one or more chamfered edges is not present" in Lumidigm. Tr. (Madisetti) at 1342:23-24, 1343:14-17; CDX-0012C.031.

Third, a POSITA would not understand Lumidigm's mention that "sensor head 32 may have other shapes, including oval, square, and rectangular shapes" (RX-0411 at 7:57-58) to disclose or suggest one or more chamfered edges. Tr. (Madisetti) at 1342:23-24, 1343:14-17. Apple apparently relies on possible "shapes" for "sensor head 32," RDX-0008.56, but Warren did not explain how this sentence about overall head "shapes" teaches chamfered edges. Tr. (Warren) at 1228:24-1229:4.

Fourth, Warren relies on the "compound curvature on the optical surface" mentioned in Lumidigm. *Id.* But Warren fails to explain how this reference to "compound curvature" teaches "one or more chamfered edges," which a POSITA would understand are edges, not compound curves. *Id.* Indeed, Madisetti confirmed that Lumidigm does not disclose or suggest one or more chamfered edges as claimed. Tr. (Madisetti) at 1342:23-24, 1343:14-17.

xii. <u>Failure to Treat the Asserted Claims as an Integrated Whole</u>

(<u>Applies to</u>: Grounds 1-6 for all asserted Multi-Detector Patent claims)

Apple presented its obviousness defense without addressing each Asserted Claim as an integrated whole. In every instance, the claimed "user-worn devices" must comprise the recited configurations of various elements. As shown in the above analysis of Lumidigm, Apple "treat[s] the claims as mere catalogs of separate parts, in disregard of the part-to-part relationships set forth in the claims and that give the claims their meaning." *Lindemann*, 730 F.2d at 1459 (reversing obviousness determination). Apple's disjointed approach fails to establish obviousness. *Id.*

MASIMO 2042
Apple v. Masimo
IPR2024-00241

[redacted]

b. Ground 2 – Lumidigm + Seiko 131 + Cramer Does Not Render Obvious Any Asserted Claim

Apple argues the combination of Lumidigm with Seiko 131 and Cramer renders obvious the Asserted Claims of the Multi-Detector Patents. Apple's purported combination of Lumidigm with Seiko 131 and Cramer—both considered by the Patent Office—fails to render any claim obvious for each of the additional reasons below.

i. Cramer Does Not Disclose or Suggest the Claim Elements For Which It Is Asserted

As summarized in Madisetti's demonstrative (CDX-0012C.025) and explained in this section, Cramer (RX-0670) does not disclose or suggest the claim elements for which it is asserted.

Cramer Does Not Disclose or Suggest At Least the Following Claim Features/Elements

✖ NO protrusion arranged over or above the interior surface or photodiodes

• FIGS. 2-3 Embodiment: Bosses 22, 22a are discrete annular rings

✖ NO protrusion comprising convex surface

✖ NO openings or windows in openings in protrusion as claimed

✖ NO protrusion comprising opaque surface/material or chamfered edge

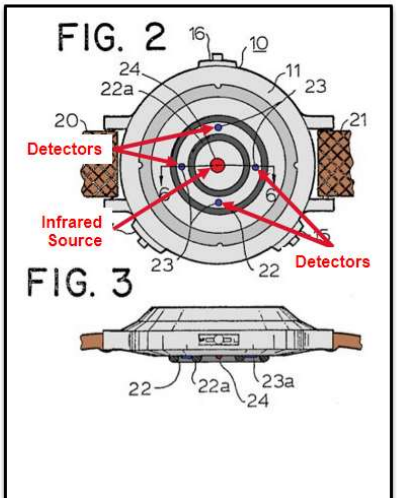

CDX-0012C.025. Warren relied on Cramer FIGS. 2-3, 6. RDX-8.67-68; Tr. (Warren) at 1231:15-22, 1232:21-1233:14. But nothing in Cramer teaches the claimed protrusion.

First, Cramer does not disclose or suggest a protrusion arranged over or above the interior surface or photodiodes, which applies to '501 **[1C]**, '502 **[19C]** and **[28E]**, and '648 **[20C]**. The alleged protrusion or protrusions (shown below in dark gray) are bosses 22, 22a:

MASIMO 2042
Apple v. Masimo
IPR2024-00241

[redacted]

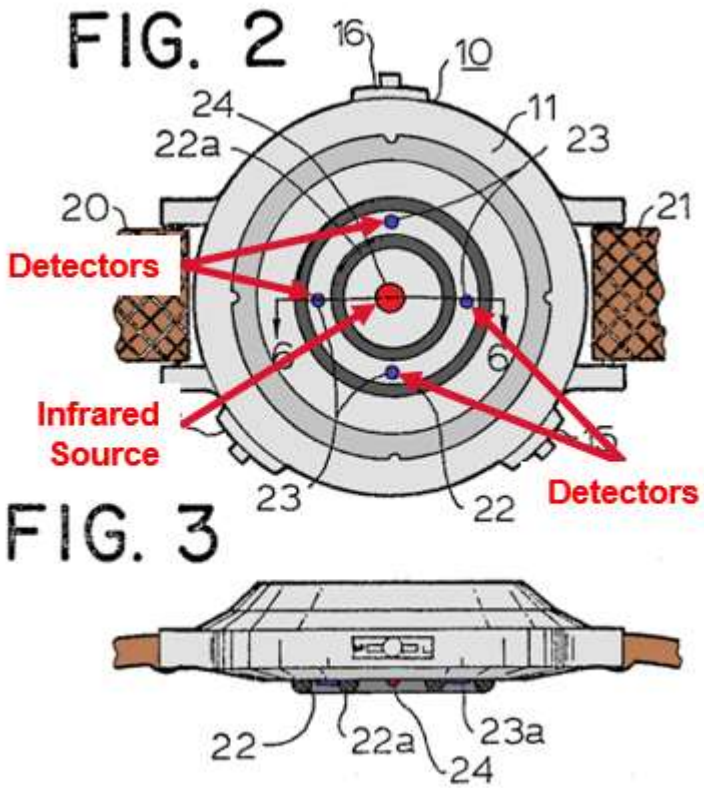

CDX-0012C.025. The bosses are discrete annular rings around a portion of a flat surface. RX-0670 at FIGS. 2-3, FIG. 6, 9:51-56. Madisetti confirmed that in "FIGS. 2 and 3, the bosses 22 and 22a, are just annular rings. They are not the claimed protrusion with its properties." Tr. (Madisetti) at 1335:15-17; *id.* at 1334:23-1335:2. Neither Cramer boss (22, 22a) is arranged over or above the detectors (23) or an interior surface on which the detectors are arranged. RX-0670 at FIGS. 2-3. Madisetti confirmed "there's no protrusion arranged over or above the interior surface or the photodiodes." Tr. (Madisetti) at 1335:3-7. He also explained that the alleged protrusion, is not the claimed protrusion because "it's not over these photodiodes" (23) or the interior surface. *Id.* at 1335:8-10.

Second, Cramer does not disclose or suggest "openings"/"through holes" in a protrusion comprising a convex surface that are "over"/"above"/"aligned with" the photodiodes or "windows"/"optically transparent material" in the protrusion openings. This shortcoming applies

[redacted]

to every asserted claim, including the following elements: ’501 **[1D]**, ’502 **[19C]-[19D]**, [**28F]-[28G]**, ’648 **[8E]-[8F], [20D]**. Apple argues a POSITA would understand Cramer’s reference to a “CLT 2160 photodiode” to infer its detectors 23 would have an associated opening and window. Tr. (Warren) at 1231:23-1232:9; RDX-0008.65, RDX-0008.70, RDX-0008.73-74. However, those photodiodes are located in the flat space between the annular rings or bosses 22, 22a—not in or “through” a “protrusion comprising a convex surface” as every claim requires. Thus, Cramer does not disclose or suggest “openings or windows in the openings in the protrusion as claimed.” Tr. (Madisetti) at 1335:22-25.

Warren’s demonstratives show that the alleged “openings”/“through holes” (in yellow below) are ***between*** the discrete bosses 22 and 22a rather than in or extending through “a protrusion comprising a convex surface” as claimed:

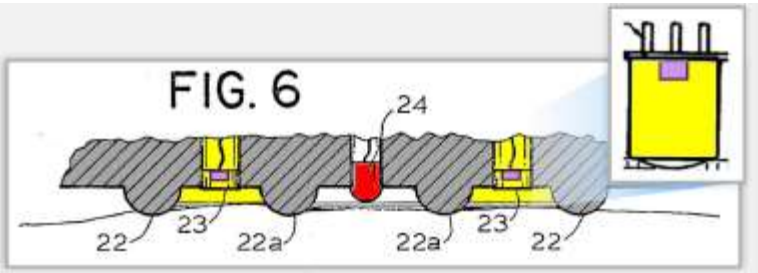

RX-0670 [Cramer] at Fig. 6

RDX-0008.70. Because Cramer does not disclose or suggest the claimed openings, it does not disclose or suggest the claimed windows therein. The alleged windows of Cramer (in blue below), like the alleged openings (yellow), are located ***between*** discrete bosses (22, 22a) rather than included in openings in “a protrusion comprising a convex surface” as claimed.

[redacted]

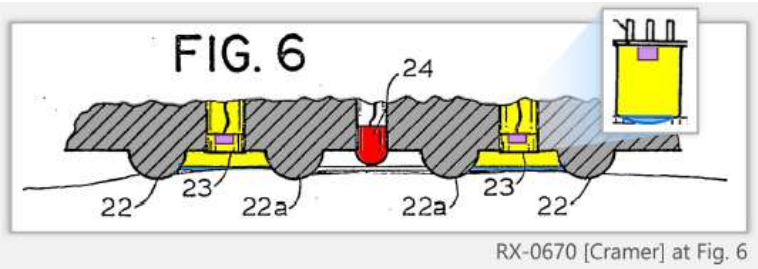

RDX-0008.65.

Third, because Cramer does not disclose or render obvious a protrusion comprising a convex surface, it cannot disclose or render obvious the claimed protrusion or protrusion openings further comprising an opaque lateral surface or opaque material configured to avoid or reduce light piping, which is required by ’501 **[1E]**, ’502 **[28F]**, and ’648 **[24]**.

Fourth, Cramer does not disclose or suggest “the protrusion further comprising one or more chamfered edges” of ’648 Patent Claim 30. Tr. (Madisetti) at 1336:1-4. Apple relies on the bosses (22, 22a) of FIGS. 2-3, 6 as protrusions. RDX-0008.67-68; Tr. (Warren) at 1231:15-22, 1232:21-1233:14. Cramer does not disclose or suggest “the protrusion further comprising one or more chamfered edges” for each of the above-described reasons that it does not disclose or suggest a protrusion as claimed. Further, the claim requires the protrusion comprise one or more chamfered edges, but the alleged protrusion or protrusions in FIGS. 2-3 (bosses 22, 22a) ***do not*** comprise the chamfered edge (blue) identified by Warren below.

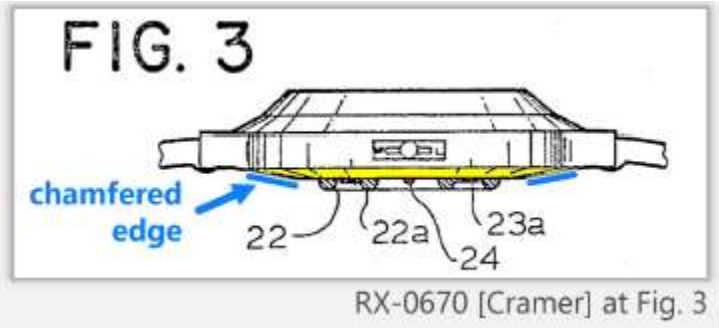

MASIMO 2042
Apple v. Masimo
IPR2024-00241

[redacted]

RDX-0008.75. Rather, as shown above, Warren ignored the claim language to identify an irrelevant surface in Cramer.

ii. Seiko 131 Does Not Disclose or Suggest the Claim Elements For Which It Is Asserted

As summarized in Madisetti's demonstrative CDX-0012C.023 and explained in this section, Seiko 131 (RX-0666) does not disclose or suggest the claim elements for which it is asserted.

Seiko 131 Does Not Disclose or Suggest At Least the Following Claim Features/Elements

- ✖ NO protrusion comprising a convex surface with openings ('501 [1D]; '502 [19C], [28F]; '648 [8E], [20D])
  - One phototransistor 32 in FIG. 28 embodiment
- ✖ NO opaque lateral surface/material configured to avoid or reduce light piping ('501 [1E]; '502 [28F]; '648 [24])
  - Alleged protrusion 341A = transparent glass. RX-666 at 10:30-33, 10:36-41.
- ✖ NO windows in openings in protrusion ('502 [19D], [28G]; '648 [8F], [20D])
- ✖ NO protrusion comprising one or more chamfered edges ('648 [30])

CDX-0012C.023.

First, Seiko 131 does not disclose or suggest a protrusion comprising a convex surface with "openings"/"through holes" in or through the protrusion that are "over"/"above"/"aligned with" the photodiodes. This failure applies to every Asserted Claim, including claim elements '501 **[1D]**, '502 **[19C]** and **[28F]**, and '648 **[8E]** and **[20D]**. Apple asserts the "outside surface" 341A of the "light transmittance plate" 34A in FIG. 28 of the Seiko 131 finger sensor is a protrusion as claimed, and that light transmittance plate 34A teach the claimed openings. RDX-0008.73; Tr. (Warren) at 1233:15-22.

MASIMO 2042
Apple v. Masimo
IPR2024-00241

[redacted]

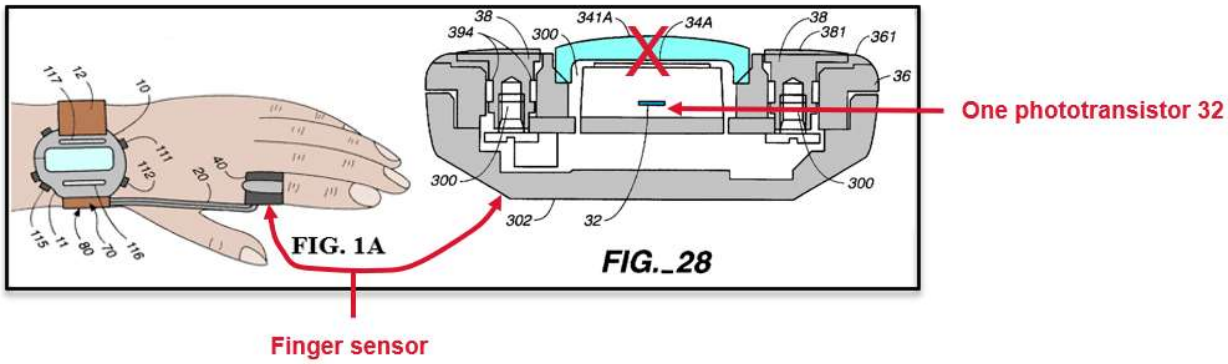

CDX-0012C.023. But Seiko 131 includes merely a single "transparent window" (blue) formed by a glass "light transmittance plate 34A" (or 34 in FIG. 5), allowing the "phototransistor 32" to detect light. RX-0666 at FIGS. 5, 28, 10:30-33, 10:36-41. Seiko 131 mentions only a single "phototransistor 32," and thus fails to disclose or suggest "openings"/"through holes" "over"/"above"/"aligned with" ***three or more*** "photodiodes." *See generally* RX-0666; Tr. (Madisetti) at 1334:4-7.

Second, Seiko 131 fails to disclose or suggest a "window"/"optically transparent material" in each of the plurality of protrusion "openings"/"through holes" for each of the above-described reasons that it fails to disclose or suggest protrusions with "openings"/"through holes" as claimed. This failure applies to '502 **[19D]** and **[28G]** and '648 **[8F]** and **[20D]**.

Third, Seiko 131 does not disclose, suggest, or render obvious the claimed protrusion or protrusion openings further comprising an opaque lateral surface or opaque material configured to avoid or reduce light piping for the above-described reasons explained for the claimed protrusion comprising a convex surface with "openings"/"through holes"/"windows." This failure applies to '501 **[1E]**, '502 **[28F]**, and '648 **[24]**.

Apple relies on Warren's conclusory statement that "Seiko incorporates opaque material in its casing." Tr. (Warren) at 1233:15-23. Warren failed to identify any support, or to relate his assumption about Seiko 131's "casing" to reducing light piping. Madisetti explained that "Seiko

MASIMO 2042
Apple v. Masimo
IPR2024-00241

131, [like] Cramer fail[s] to recognize light piping as a problem at all or motivate a solution to address it." Tr. (Madisetti) at 1340:8-10; RX-0666 at FIG. 28, 10:33-51. Moreover, the alleged protrusion 341A is the "outside surface" of a "***transparent*** window" formed by the ***glass "light transmittance plate"*** 34A—Seiko 131 expressly confirms that the alleged protrusion is formed of transparent glass. RX-0666 at FIGS. 5, 28, 10:30-41. Accordingly, Seiko 131 fails to disclose or suggest the alleged protrusion or that its openings include an opaque lateral surface or opaque material configured to avoid or reduce light piping. *Id.*

Fourth, Seiko 131 does not disclose or suggest "the protrusion further comprising one or more chamfered edges." Tr. (Madisetti) at 1334:7-8. Apple relies on the outside surface 341A of light transmittance plate 34A shown in FIG. 28 as the alleged protrusion. Tr. (Warren) at 1231:1-8; RDX-0008.67. But Seiko 131 does not disclose or suggest "the protrusion further comprising one or more chamfered edges" for each reason that it fails to disclose or suggest the claimed protrusion. Further, the alleged protrusion of Seiko 131 (outside surface 341A shaded in yellow below) ***does not*** comprise the chamfered edge (blue) identified by Warren.

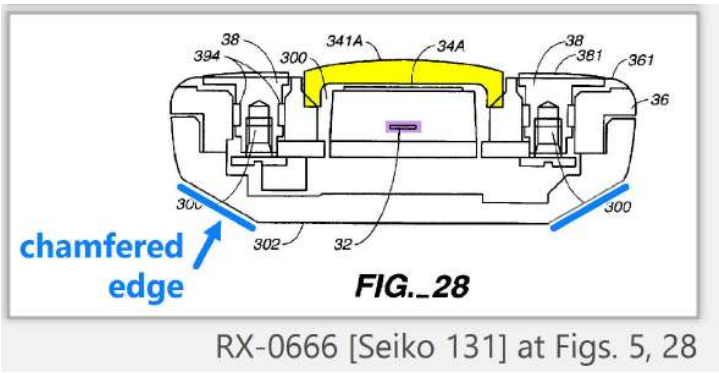

RDX-0008.75. Warren ignored the claim language to identify an irrelevant edge in Seiko 131, just as he did for Cramer, discussed above. Warren admitted "those blue lines are ***<u>not</u> on the protrusion*** that [he] highlighted in yellow" in the above demonstrative. Tr. (Warren) at 1279:24-1280:2.

MASIMO 2042
Apple v. Masimo
IPR2024-00241

[redacted]

iii. No Motivation to Combine or Reasonable Expectation of Success in Combining Lumidigm + Seiko 131 + Cramer

For each of the reasons already explained in Section III.E.3.a.iv, a POSITA would not have been motivated to combine the Lumidigm FIG. 8B embodiment with a protrusion comprising a convex surface, including the alleged protrusions of Seiko 131 and Cramer. The art taught away from such a combination (for example by Mendelson '799). A POSITA also would not have been motivated to make this combination for several additional reasons.

First, the Federal Circuit "consider[s] motivation to combine and reasonable expectation of success ***only if*** all the elements of an invention are found in a combination of prior art references."). *PAR Pharm.*, 773 F.3d at 1194. But Lumidigm, Seiko 131, and Cramer each fail to disclose a protrusion comprising a convex surface. *Supra* Sections III.E.3.a.iii, III.E.3.b.i-ii.

Second, Madisetti explained combining the alleged protrusions of Seiko 131 or Cramer with Lumidigm would make the FIG. 8B embodiment "less comfortable." But that is "not align[ed] with Lumidigm's goal" of using the compound curvature to "incorporat[e] ergonomic features." Tr. (Madisetti) at 1339:19-1340:3. Indeed, Cramer recognizes such a feature would be "forced into the flesh of the wrist" and thus "***be uncomfortable*** over a prolonged period of time." RX-0670 at 5:26-29. Thus, a POSITA would not have been motivated to add a pressure-inducing feature like a protrusion in a watch-based sensor. *See, e.g.*, Tr. (Warren) at 1232:21-1233:14.

Third, Warren argues Seiko 131 discloses its alleged protrusion is a "means to increase the signal quality." Tr. (Warren) at 1232:17-20. But Seiko 131 includes no such signal quality discussion. *See generally* RX-0666. Seiko 131 mentions using the alleged protrusion 341A to add pressure between the sensor and tissue. *Id.* at FIG. 21B. Apple fails to establish any teaching of increase in signal quality. Tr. (Warren) at 1233:1-14. And Apple ignores that

MASIMO 2042
Apple v. Masimo
IPR2024-00241

Mendelson '799 teaches away from using inducing pressure on the tissue in the context of a pulse oximeter. *Supra* Section III.E.3.a.iv; CX-1733 at 2:47-57; Tr. (Madisetti) at 1338:6-1339:4. Kiani explained the same understanding by the industry at the time, and how he was surprised to discover the benefit of a pressure-inducing convex protrusion disclosed in his patents. Tr. (Kiani) at 98:9-99:16.

Apple uses the teachings of the Asserted Patents to supply a motivation to combine, which is improper hindsight. *Otsuka v. Pharm. Co. v. Sandoz, Inc.*, 678 F.3d 1280, 1296 (Fed. Cir. 2012).

Fourth, Cramer fails to provide a motivation to combine. Apple argues Cramer's alleged protrusion(s) (annular bosses 22, 22a) would provide "minimum discomfort to the user." Tr. (Warren) at 1232:21-25. But Cramer states the "***coaxial arrangement***" of its alleged protrusions (annular bosses 22, 22a) "provides … minimum discomfort to the wearer." RX-0670 at 5:48-51. Cramer thus expressly attributes the "coaxial arrangement" of its discrete annular rings (bosses 22, 22a) as providing the alleged benefit. Cramer thus provides no reason for a POSITA to combine a protrusion comprising a convex surface with FIG. 8B of Lumidigm. Further, Mendelson '799 teaches away from using pressure inducing features for a pulse oximeter. *Supra* Section III.E.3.a.iv; CX-1733 at 2:47-57; Tr. (Madisetti) at 1338:6-1339:4.

Fifth, Apple fails to present clear and convincing evidence of either a motivation to combine or an expectation of success. Warren asserts Lumidigm suggests the combination because it "***could***" include a compound curvature that ***could*** be convex. Tr. (Warren) at 1233:1-9. But Lumidigm neither discloses nor suggests this combination. *Supra* Section III.E.3.a.iii. Warren also testified a POSITA "would know that they ***could*** go to a reference like Seiko [131] or Cramer to teach different ways that you ***might*** incorporate a convex protrusion." Tr. (Warren)

MASIMO 2042
Apple v. Masimo
IPR2024-00241

at 1233:1-14. But this presumes a POSITA would have placed a protrusion comprising a convex surface over the optical components in a pulse oximeter. Warren failed to provide any reason ***why*** a POSITA ***would*** do so. *Id.* Warren also failed to explain ***how*** such a combination would work, and whether a POSITA would have expected the asserted combination to succeed. And Mendelson '799 shows a POSITA would not have reasonably expected success. *Supra* Section III.E.3.a.iv; CX-1733 at 2:47-57.

c. Ground 3 – Lumidigm + Webster Does Not Render Obvious '502 Patent Claim 22

Apple argues the combination of Lumidigm with Webster renders obvious '502 Patent Claim 22. Lumidigm does not render obvious '502 Patent Claim 22 for each of the reasons explained above for Ground 1. *Supra* Section III.E.3.a. And Webster—which the PTO considered during prosecution—fails to provide the missing limitations for each the additional reasons below.

i. Lumidigm In Combination with Webster Does Not Disclose or Render Obvious '502 Patent Claim 22

Webster does not disclose, suggest, or render obvious a thermistor in a user-worn SpO_2 sensor or windows in the "openings"/"through holes" of any protrusion. CDX-0012C.027; Tr. (Madisetti) at 1336:5-25, 1345:4-15.

First, regarding '502 Patent **[20]-[21], [28D]** and **[28I]**, Warren relies on a thermistor shown in Webster for use with a "transcutaneous PO_2 electrode." Tr. (Warren) at 1239:10-17; RDX-0008.80; RX-0035 at 42 (Figure 3.4). But Webster's ***transcutaneous*** sensor is invasive, and thus cannot noninvasively measure anything. Moreover, PO_2 is the partial pressure of oxygen, and not oxygen saturation. CDX-0012C.027; Tr. (Madisetti) at 1336:7-14; RX-0035 at 43. Apple concedes both points. Tr. (Warren) at 1239:10-1240:3.

MASIMO 2042
Apple v. Masimo
IPR2024-00241

Warren contends "Webster addresses the idea of compensation for LED temperature changes." Tr. (Warren) at 1239:10-1240:3; RDX-0008.80. But Warren never explained how the discussion of "compensat[ing] for ***LED temperature*** changes" he relies on (RX-0035 at 85) somehow relates to the sensor he found in an invasive transcutaneous sensor, which ***does not include LEDs***. RX-0035 at 42 (Figure 3.4). Nor could he, as the two concepts are in entirely different chapters of a 262-page book, written by different authors. RX-0035 at 43. These failures of Webster apply to '502 **[20]-[21]**, **[28D]** and **[28I]**.

Second, a POSITA would not have been motivated to add the thermistor from Webster's transcutaneous PO_2 electrode/sensor to Lumidigm (which applies to '502 **[20]**, **[28D]**). Nor would a POSITA modify Lumidigm to include one or more processors to receive the thermistor's signal and adjust operation of the device (which applies to '502 **[21]**, **[28I]**). Tr. (Madisetti) at 1336:5-18; CDX-0012C.027. Also, nothing in Lumidigm motivates any need for temperature compensation. Instead, Warren improperly relies on the asserted claims themselves rather than any teaching in Lumidigm or Webster. Tr. (Warren) at 1239:18-1240:3; *Univ. of Strathclyde v. Clear-Vu Lighting LLC*, 17 F.4th 155, 165 (Fed. Cir. 2021).

Warren also fails to provide any explanation regarding ***how*** Webster's transcutaneous PO_2 sensor thermistor and a temperature calibration mechanism allegedly would have been combined. Tr. (Warren) at 1239:10-1241:17. Rather, he mentioned "that combination already been used in other devices at the time with success." *Id.* at 1241:5-17. But Warren provided no evidence or examples in support. *Id.* at 1239:10-1241:17.

Third, Webster fails to disclose or render obvious "optically transparent material within each of the openings" of '502 **[19D]**, and for the same reasons fails to disclose or suggest the "windows" as recited in '502 **[28G]**, '648 **[8F]**, or '648 **[20D]**. In Webster "there are no

MASIMO 2042
Apple v. Masimo
IPR2024-00241

windows and openings/through holes of the protrusion as claimed," and "there's no motivation in Webster to add windows to Lumidigm's biometric system." Tr. (Madisetti) at 1336:19-25; CDX-0012C.027. Indeed, Warren did not testify that Webster discloses, suggests, or renders obvious "optically transparent material" or "windows" as claimed. *See, e.g.*, Tr. (Warren) at 1238:24-1240:3.

d. Ground 4 – Lumidigm + Seiko 131 + Cramer + Webster Does Not Render Obvious '502 Patent Claim 22

Apple's Ground 4 is merely the combination of Ground 2 (limited to '502 Patent Claim 22) and Ground 3. Accordingly, for each of the reasons set forth above in discussing '502 Patent Claim 22 for Ground 2 and Ground 3, the asserted combination for Ground 4 fails to render obvious '502 Patent Claim 22.

e. Ground 5 – Lumidigm + Webster + Apple 047 Does Not Render Obvious '502 Patent Claim 28

Apple argues that the combination of Lumidigm with Webster and Apple 047 renders obvious '502 Patent Claim 28. Lumidigm does not render obvious '502 Patent Claim 28 for each of the reasons explained above for Ground 1. *Supra* Section III.E.3.a. Lumidigm combined with Webster and Apple 047 fails to render this claim obvious for each of the additional reasons below.

Lumidigm with Webster does not disclose or render obvious the "windows" or "thermistor"-related claim elements of '502 Patent Claim 28, for the reasons shown above regarding Ground 3. *Supra* Section III.E.3.c. Adding Apple 047 does not address the shortcomings of Lumidigm and Webster.

MASIMO 2042
Apple v. Masimo
IPR2024-00241

First, regarding '502 **[28D]**, the asserted combination fails to render obvious "a thermistor configured to provide a temperature signal" for each of the reasons set forth above regarding Ground 3 for '502 **[20]** and **[21]**. *Supra* Section III.E.3.c.

Second, regarding **'502 [28G]**, the asserted combination fails to render obvious "a plurality of transmissive windows, each of the transmissive windows extending across a different one of the openings" for each of the reasons set forth above regarding Ground 3 for '502 **[19D]**. *Supra* Section III.E.3.c.

Third, regarding '502 **[28I]**, the asserted combination fails to render obvious "the one or more processors further configured to receive the temperature signal" for each of the reasons set forth above regarding Ground 3 that the asserted combination fails to render obvious "the one or more processors are further configured to receive a temperature signal from the thermistor" of '502 **[21]**. *Supra* Section III.E.3.c.

Fourth, regarding '502 **[28K]**, the combination of Lumidigm with the alleged Apple 047 touch screen fails to disclose or render obvious "a user interface comprising a touch-screen display … configured to display indicia response to the oxygen saturation of the user." Lumidigm fails to disclose or render obvious this claim feature, as shown above for Ground 1. *Supra* Section III.E.3.a.x.

Apple 047 also does not disclose or render obvious user-worn devices with a touch-screen configured to display indicia of oxygen saturation (or any) measurements. *See generally* RX-0673. As Madisetti explained, Apple 047 "refers to an iPad-type device, and you can see [it] compared to the size of the hand [in FIG. 2]. It's not [a] user-worn physiological measurement device with a touchscreen configured to display oxygen saturation measurements." Tr. (Madisetti) at 1337:3-11. Apple does not dispute Apple 047 fails to disclose (1) a user-worn

MASIMO 2042
Apple v. Masimo
IPR2024-00241

touch-screen display and (2) a touch-screen display configured to display a measurement of oxygen saturation or any physiological parameter. Tr. (Warren) at 1240:8-1242:9. Accordingly, Apple fails to show the asserted combination with Apple 047 renders obvious the claimed touch-screen.

A POSITA would not have looked to such a large format touch screen 112—"the iPad-like device of Apple 047"—to improve a small user-worn FIG. 8B wristwatch of Lumidigm. Tr. (Madisetti) at 1337:5-14. Indeed, a POSITA would not have been "motivat[ed] to combine Lumidigm's biometric system with [the] touchscreen of [Apple] 047 to display a measurement that Lumidigm does not take." *Id.* at 1337:15-19. Further, Apple's obviousness analysis is woefully deficient. Warren testified a POSITA "could look to a number of references, but looking to … Apple 047 would be an obvious choice." Tr. (Warren) at 1241:5-13. He also testified a POSITA "would have" expected success because the combination had allegedly been used before. *Id.* at 1241:14-17. Such conclusory testimony fails to establish a POSITA would have combined the alleged touch screen 112 of Apple 047 with the FIG. 8B wristwatch, how the combination would have worked (or if it would have worked), or whether a POSITA would have expected the combination to succeed. *Id.*

f. <u>Ground 6 – Lumidigm + Seiko 131 + Cramer + Webster + Apple 047 Does Not Render Obvious '502 Patent Claim 28</u>

Apple's Ground 6 is merely the combination of Ground 2 (limited to '502 Patent Claim 28) and Ground 5. Accordingly, for each of the reasons set forth above in discussing Ground 2 (for '502 Patent Claim 28) and Ground 5, the asserted combination for Ground 6 fails to render obvious '502 Patent Claim 28.

MASIMO 2042
Apple v. Masimo
IPR2024-00241

[redacted]

g. Grounds 7-9 – Kansas State 6D Is No Longer Asserted

As explained above, Apple asserted grounds based on the rudimentary foam sensor head (Kansas State 6D) made by Warren's students. *Supra* Section III.E.1. Apple represented it would argue three such grounds at the hearing (Appendix A at 3-5), included such grounds in its Pre-Hearing Brief, and even included such grounds in the demonstrative slides it exchanged with Masimo's counsel before Warren's testimony. Apple thus forced Masimo to devote Pre-Hearing Brief space and hearing preparation time to rebutting those grounds. But Apple did not present its Kansas State 6D grounds at the hearing and waited five days after the hearing to confirm it withdrew them. Appendix B at 1. Kansas State 6D grounds warrant no further discussion other than Apple's potential violation of the order weeks earlier to identify its grounds for the hearing.

h. Objective Indicia of Nonobviousness

The hearing testimony and evidence also provided significant objective indicia of nonobviousness supporting the validity of the Asserted Claims.

i. Legal Standard

Objective evidence of nonobviousness "'must always when present be considered.'" *Transocean Offshore Deepwater Drilling, Inc. v. Maersk Drilling USA, Inc.*, 699 F.3d 1340, 1349 (Fed. Cir. 2012) (citation omitted). Such evidence includes failure and skepticism by others, industry recognition, unexpected results, copying, commercial success, and teaching away. *See, e.g.*, *Graham v. John Deere Co. of Kan. City*, 383 U.S. 1, 17-18 (1966); *Transocean*, 699 F.3d at 1349; *Allergan, Inc. v. Sandoz Inc.*, 796 F.3d 1293, 1305 (Fed. Cir. 2015). Objective evidence of non-obviousness plays an important role as a guard against the statutorily proscribed hindsight reasoning in the obviousness analysis. *WBIP, LLC v. Kohler Co.*, 829 F.3d 1317, 1331–32 (Fed. Cir. 2016). The Federal Circuit has held such evidence "may often be the most

MASIMO 2042
Apple v. Masimo
IPR2024-00241

probative and cogent evidence in the record." *Stratoflex, Inc. v. Aeroquip Corp.*, 713 F.2d 1530, 1538 (Fed. Cir. 1983); *Graham*, 383 U.S. at 36 ("[Objective indicia] may also serve to guard against slipping into use of hindsight, and to resist the temptation to read into the prior art the teachings of the invention in issue." (cleaned up)).

Objective considerations are presumed to have a nexus to the claimed invention when the patentee shows the asserted objective evidence is tied to a specific product and the product "is the invention disclosed and claimed in the patent." *WBIP,* 829 F.3d at 1329 (citing *J.T. Eaton & Co. v. Atl. Paste & Glue Co.*, 106 F.3d 1563, 1571 (Fed. Cir. 1997); *Crocs, Inc. v. Int'l Trade Comm'n*, 598 F.3d 1294, 1310–11 (Fed. Cir. 2010). A patent challenger can rebut the presumption of nexus by presenting evidence the objective indicia were "due to extraneous factors other than the patented invention." *Demaco Corp. v. F. Von Langsdorff Licensing Ltd.*, 851 F.2d 1387, 1392-93 (Fed. Cir. 1988).

The Federal Circuit previously upheld a finding of commercial success for an Apple patent because "Apple's marketing experts elected to emphasize the claimed feature as evidence of its importance." *Apple Inc. v. Samsung Elecs. Co., Ltd.*, 839 F.3d 1034, 1055-56 (Fed. Cir. 2016) (describing the "slide to unlock feature" as "the very first feature shown in Apple's original iPhone TV commercial."). This evidence supported nexus despite the numerous features within an iPhone. *Id.* Similarly, here, despite the many features of the Series 6 and 7 Watches, Apple's extensive marketing of the claimed feature, determining a user's blood oxygen saturation, supports a finding that the success of those Watches is related to the patented inventions.

MASIMO 2042
Apple v. Masimo
IPR2024-00241

[redacted]

ii. Apple's Skepticism of the Protrusions of the Multi-Detector Patents

Apple argues that the claimed protrusion was well known to a POSITA. Tr. (Warren) at 1194:15-1195:5; RDX-0008.12. The hearing revealed otherwise. Apple attempted to minimize the feature by associating it with other purposes. Apple engineer Land testified the "back crystal" in the Series 0 was "dome-shaped." Tr. (Land) at 959:14-16. He explained "the primary reason" for the dome shape was to provide wireless charging. *Id.* at 959:17-960:2. Land also testified after the initial design of the Series 0 in 2014, Apple turned to improving the heart-rate feature and to adding "a blood oxygen sensor." *Id.* But Apple's own engineers expressed skepticism about measuring oxygen saturation through a protrusion.

At that time Apple's engineers working on the pulse oximetry sensor viewed the convex back crystal as a negative. They understood a curved surface on the back of the watch (back crystal or BC) would increase the amount of unwanted light ("crosstalk") reaching the light sensor (photodetector or PD). In a 2015 email to Block, an Apple engineer explained that curved back crystals have [redacted] CX-1789C at 2. The email continued, [redacted] *Id.* Another email explained a [redacted] CX-1790C at 1. The email attached a presentation in which the engineers showed their hypothesis of the problem with the curved back crystal with reference to the following figure:

MASIMO 2042
Apple v. Masimo
IPR2024-00241

[redacted]

CX-1790C at 1 (explanation), 5 (illustration). Tr. (Block) at 904:14-25. The curved back causes more light piping or "crosstalk," as Apple called it, compared to a flat back crystal. CX-1790C at 3 [redacted]

This evidence contradicts Apple's argument here that the curved surface would have been obvious for a physiological sensor. *See Neptune Generics, LLC v. Eli Lilly & Co.*, 921 F.3d 1372, 1377 (Fed. Cir. 2019) (holding that industry skepticism supported a finding of nonobviousness).

iii. <u>The Protrusions of the Multi-Detector Patents Achieved Unexpected Results</u>

Madisetti explained "A POSITA would understand and expect that adding undue pressure to the measurement site would displace blood away from the sensor" and that such a person would believe it "to cause measurement errors." Tr. (Madisetti) at 1374:9-12. Indeed, the prior art taught to avoid pressure-inducing designs that displace the blood causing large errors, as explained above regarding Mendelson '799 and explained by Kiani. *See, e.g.*, CX-1733 at 2:47-57.

Apple's own witness, Robert Rowe from Lumidigm, also explained that the sensor surface should conform to the tissue. Lumidigm describes using a "compound curvature" to

MASIMO 2042
Apple v. Masimo
IPR2024-00241

"incorporat[e] ergonomic features." RX-0411 at 7:58-63; *see* Tr. (Warren) at 1210:18-1211:1 ("incorporating ergonomic features" refers to "comfort and usability"). Rowe conceded that, if anything, the ***concave*** compound curvature of the Lumidigm patent would better "approximate the surface of the skin" and thus provide better coupling. CX-0279C (Rowe) at 69:8-21. This is consistent with Mendelson '799, and the opposite of a pressure-inducing convex protrusion.

In contrast to that understanding, the convex protrusion of the Asserted Claims increases contact pressure between the sensor and the skin in the manner previously believed to cause errors in oxygen-saturation measurements. Kiani testified about the inventors' own surprise in development work that led to the claimed inventions. Before the claimed inventions, Masimo had always believed that sensors with a well or cavity were advantageous because they would ensure no pressure was applied to the measurement site. Tr. (Kiani) at 99:2-4, 8-16. Then, when Masimo and Cercacor were developing technology to noninvasively measure hemoglobin and glucose, they realized both measurements are difficult and "Just getting to the signal is really challenging." *Id.* at 98:13-16.

Kiani and Cercacor engineers experimented with creating an active pulse. *Id.* at 98:9-99:16. During those experiments, they were surprised applying the pressure strengthened the signal. As Kiani explained, "one time the active pulse detector hammer had been left in, and when it pushed up against the digit we noticed the signal got stronger, which was a surprise to us." *Id*. at 98:23-99:1. This surprise led to the idea of "a protrusion instead of the opposite, which we always had done, which was the cavity." *Id.* at 99:2-4, 8-16. The Multi-Detector Patents inventors found the signal-to-noise ratio of the sensor could be significantly improved, by an order of magnitude, by using a convex protrusion. JX-0001 at 21:9-15, 21:26-43.

MASIMO 2042
Apple v. Masimo
IPR2024-00241

It was not until years after the Multi-Detector Patents that others, including Apple, recognized the benefit of the claimed protrusion comprising a convex surface and the other claimed structures. As late as 2015, Apple's cadre of highly experienced "Apple Sensing Hardware" engineers did not appreciate the significance of pressure-inducing designs. In an email to other engineers, Block expressed his surprise that CX-0114C at 3. *Id.* at 2. *Id.* The magnitude of the improvement came as a total shock. *Id.* Therefore, Apple's own engineers confirm that a POSITA would share the understanding espoused by Mendelson and others.

Apple's engineers followed up by filing a series of patents describing the benefits of a convex protrusion. For example, the benefits of a convex protrusion were described by Apple's engineers in an Apple patent filed in July 2016: U.S. Patent No. 10,702,211 (the "'211 patent"). CX-1569. The '211 patent states that "a convex shape can enable improved contact with the user's skin." *Id.* at 9:26-44. Figure 3 of the '211 patent "illustrates a simplified perspective view of a first photosensor window that is used in the wearable electronic device illustrated in FIGS. 1A-2." *Id.* at 3:37-39, 4:54-56.

Apple witnesses, Mannheimer, Block, and Venugopal, described in a patent that a convex protrusion improves the signal by imparting certain pressure on tissue. CX-1806. Figures 3A and 3B illustrate a "protrusion 302" applying "pressure 320."

MASIMO 2042
Apple v. Masimo
IPR2024-00241

[redacted]

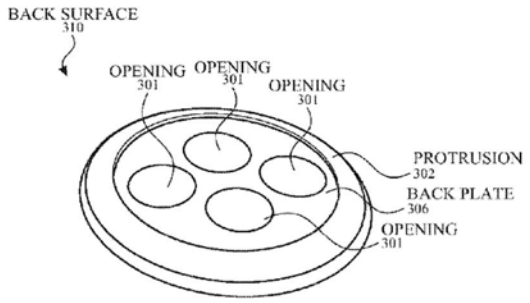

FIG. 3A

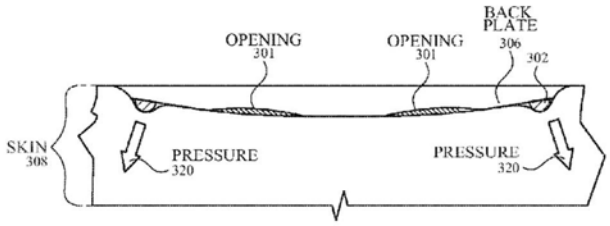

FIG. 3B

Id. at FIGS. 3A, 3B. The specification explains "Protrusion 302 can be configured to create pressure to skin 308." *Id.* ¶[0033]. The Apple engineers describe that "By applying localized pressure to the individual's skin, the pressure gradient across arterial walls can be reduced, which can lead to an ***increase in pulsatile (AC) signal***." *Id.* ¶[0032]. Thus, the Apple engineers espoused the benefits of a convex protrusion a year after the launch of Series 0 and long after the Multi-Detector Patents, and after they had initially expressed a flat surface would be preferred.

This evidence contradicts Apple counsel's boast, in opening, that the technology was as "old as the hills." Tr. (Apple Opening) at 53:5-8. It also undermines the credibility of Apple's expert who opined a protrusion would "increase your AC-to-DC signal ratio, meaning that you would see the tissue perfusion in a better way." Tr. (Warren) at 1194:15-24. As explained above, Mendelson, with many patents in pulse oximetry, teaches this is a problem, not a solution. The contemporaneous documents, and Apple's patents filed years later, demonstrate Apple's arguments are based on hindsight.

MASIMO 2042
Apple v. Masimo
IPR2024-00241

[redacted]

iv. Apple's Skepticism and Failures Demonstrate the Non-Obviousness of the Asserted Claims

Apple relies on Lumidigm's FIG. 8B wristwatch as the "user-worn device" for its obviousness arguments. According to Warren, it would have been obvious in 2008 to add pulse oximetry and a protrusion (from, for example, Seiko 131 or Cramer) to that wristwatch. Tr. (Warren) at 1232:10-1233:14. Madisetti disagreed and explained the industry skepticism of measuring oxygen saturation at the wrist. Tr. (Madisetti) at 1371:12-1372:12. The skepticism of Apple's engineers and development timeline confirm adding the claimed inventions to Lumidigm's wristwatch would not have been obvious to a POSITA.

Apple's development of its Apple Watch pulse-oximetry sensor [redacted]. And many people expressed doubts about constructing a sensor to detect SpO_2 on the wrist. Apple documents show it considered Masimo to be the premier provider of non-invasive monitoring technology. CX-1793C at 5. [redacted] CX-1793C at 2. [redacted] *Id.* at 5. [redacted] *Id.* at 16.[12]

That same month, Masimo announced the availability of a product called $iSpO_2$ at the Consumer Electronics Show (CES). CX-1511C; Tr. (Kiani) at 103:7-104:4. The $iSpO_2$ worked with Apple's iPhone. *Id.* News outlets published several articles about it. CX-1512C. Kiani

[12] Apple's struggles to develop SpO_2 on the wrist are apparent from these Apple documents. Masimo was able to present some of these documents only after obtaining a court order from the California District Court allowing use of 18 Apple documents in this investigation. *See* Doc. ID 771736.

MASIMO 2042
Apple v. Masimo
IPR2024-00241

testified that within two to three months Apple contacted Masimo, called Masimo Tr. (Kiani) at 104:14-18. CX-1539C; Tr. (Kiani) at 104:19-22, 107:1-108:18. CX-1539C at 1; Tr. (Kiani) at 107:24-108:13.

Then, in July 2013, Apple began executing its plan by hiring Masimo's Chief Medical Officer, Michael O'Reilly. CX-1615C. *Id*. But, Apple's hiring of Masimo's employees continued. Tr. (Kiani) at 111:8-23.

In August 2013, Apple took apart a Masimo forehead reflectance sensor and evaluated Masimo's iSpO2 for the iPhone:

CX-0185C at 20; *see also* CX-0185C at 3, 17-21, 26-29; CX-1711C at 2. Apple also tested Masimo's reflectance sensor on the wrist:

MASIMO 2042
Apple v. Masimo
IPR2024-00241

CX-0185C at 19.

In October 2013, Lamego (then Cercacor's CTO) sent an email to Apple's CEO Tim Cook, offering to solve Apple's patient monitoring problems based on his 10 years at Masimo and Cercacor. CX-1461.

CX-1800C at 1. *Id.* at 2. *Id.*; *see* Tr. (Venugopal) at 843:9-11 ("Steve Hotelling is senior director of our organization."). Tr. (Land) at 987:11-18, 980:2-981:18. Ultimately, Apple "ended up recruiting about 30 [Masimo] engineers and they stopped communicating" with Masimo. Tr. (Kiani) at 111:15-20.

MASIMO 2042
Apple v. Masimo
IPR2024-00241

Apple hired Lamego in January 2014. He is a named inventor on the '501, '502, '648, and '127 Patents in this Investigation. *See, e.g.*, JX-0001 at 2. In 2015, Apple released the Apple Watch Series 0. Tr. (Venugopal) at 818:10-15. The Series 0 supposedly had a convex back crystal covering multiple detectors, just as described in the '501, '502, and '648 Patents. Tr. (Land) at 959:3-960:2. But the internal Series 0 document Apple introduced, which was from before Lamego's arrival, illustrated a flat back crystal. RX-0396C at 17-18. The Series 0 did not perform pulse oximetry. Tr. (Mannheimer) at 1013:7-13. The Series 0 used a Fresnel lens, which according to a Mannheimer patent, keeps the emitted light-beam shape from changing. CX-1806 ¶[0053] ("it may be desirable for light emitted by the light emitter to retain its optical power, collection efficiency, beam shape, and collection area…. Examples of the disclosure can include the Fresnel lens(es) located in the protrusion."). The Series 6 and 7 did not use a Fresnel lens, but rather which ideally would create as much overlap in the red and infrared light as much as possible. Tr. (Mannheimer) at 1020:8-20. To create that overlap, the changes the shape of the light. Tr. (Madisetti) at 732:25-733:18; CDX-0011C.077; *see also* Tr. (Venugopal) at 826:13-16, 831:4-9.

Later in 2014, Apple hired Mannheimer. Tr. (Mannheimer) at 996:9-24. Mannheimer replaced Marcelo Lamego as a Sensor Architect. CX-0175C (identifying Mannheimer as "Marcelo Repl." for the Mannheimer had spent over 20 years working for Nellcor, a company that makes pulse oximeters, and considered his specialty to be the physio-optics of pulse oximetry. *Id.* at 1009:2:8; CX-0299C (Waydo) at 180:22-181:15; CX-0289C (Mannheimer) at 14:21-15:1, 191:21-192:7. Importantly, Apple presented no evidence that Mannheimer, in all his years at Nellcor designing pulse oximetry sensors, had ever used a convex protrusion over the detectors. Notably, however, Mannheimer was part of the

MASIMO 2042
Apple v. Masimo
IPR2024-00241

[redacted]

engineering team at Nellcor that designed products called the 04, 05, 05ci. *Id.* at 1009:9-14. A jury found that Nellcor's products infringed Masimo's patents. Tr. (Kiani) at 90:15-91:10; *Mallinckrodt, Inc. v. Masimo Corp.*, No. 2:00-cv-06506, 2004 U.S. Dist. LEXIS 28518 (C.D. Cal. 2004), *aff'd in part and rev'd in part, reh'g en banc denied*, 147 Fed. Appx. 158 (Fed. Circ. 2005), *cert. dismissed*, 546 U.S. 1162 (2006). Mannheimer testified at that trial. Tr. (Mannheimer) at 1009:21-24. Thus, whether through Masimo's engineers, or through Mannheimer who helped design Nellcor's products that were found to use Masimo technology, Apple apparently sought out Masimo's technology from whatever source it could find it.

Within days of Mannheimer joining Apple, Land told him he "would be asked to look into doing pulse oximetry at the wrist for the Apple Watch." Tr. (Mannheimer) at 996:25-997:5. Mannheimer's immediate reaction was "internally to my head, rolling my eyes, thinking as I thought of in the past with other clients like good luck with that." *Id.* at 1012:12-22. Dr. Stephen Waydo, the director of Apple's team for health algorithms on the Apple Watch who worked on the Series 0 heart rate sensor, testified it was "extremely challenging" to develop the blood-oxygen feature. Tr. (Waydo) at 938:21-24. Waydo explained the difficulties of measuring blood-oxygen levels on the wrist. CX-0299C (Waydo) at 166:4-167:5. Mannheimer expressed skepticism it could even be done. CX-0289C (Mannheimer) at 172:9-173:6; Tr. (Mannheimer) at 1012:23-25. He agreed the "signal is just enormously weak" at the wrist. Tr. (Mannheimer) at 1013:1-6.

Mannheimer investigated and determined Apple could not simply add LEDs to the Series 0 form factor to accurately measure oxygen saturation. Tr. (Mannheimer) at 1015:9-19. Mannheimer believed to measure pulse oximetry at the wrist, "[redacted]

MASIMO 2042
Apple v. Masimo
IPR2024-00241

CX-0177C at 13. Land also recognized invention was required, and, as of 2015, Apple had some ideas, but no solid plan on how to measure oxygen saturation. Tr. (Land) at 981:24-983:12; 984:13-21.

Mannheimer and Waydo were not alone in their skepticism. *See* CX-0295C (Shui) at 108:13-21; CX-0283C (Lefort) at 198-200. Land testified he received an email from Hotelling explaining Apple thought Masimo had PPG technology to help accelerate Apple's development efforts. Tr. (Land) at 981:11-18; CX-1800C. An Apple presentation from that time stated "conventional sensing methods do not result in waveforms that are consistent enough for SpO2 measurements" and "wrist very challenging." CX-1800C at 9, 13. Land agreed invention would be required for the optical properties. Tr. (Land) at 982:3-983:12.

Indeed, none of the Series 0, 1, 2, 3, 4, and 5 watches measured oxygen saturation. Tr. (Mannheimer) at 1013:7-20. Apple's failure to measure oxygen saturation in the Series 0, 1, 2, 3, 4, and 5 further confirms adding oxygen saturation to the wrist, like the wristwatch of Lumidigm, would not have been obvious. Tr. (Madisetti) at 1372:13-1373:5; CX-0289C (Mannheimer) at 174:19-176:6.

Land explained that Apple "focused on our really doubling down on our own internal effort to figure out how to do it on our own." Tr. (Land) at 989:17-20. "[Apple] built prototypes, we studied them on people, we iterated. We really worked hard to study this problem and converged on a solution that worked." *Id.* at 992:1-4.

In July 2015, Mannheimer and Land presented a status update where they noted that measuring oxygen saturation at the wrist would require "invention" with "

MASIMO 2042
Apple v. Masimo
IPR2024-00241

[redacted] CX-0177C at 13. They also noted that [redacted] *Id.* at 8. [redacted] *Id.* [redacted] *Id.* at 9. Mannheimer testified that "the wrist is just enormously different from the physiological perspective than more conventional sites for pulse oximetry" and that "the signal is just enormously weak." Tr. (Mannheimer) at 1013:1-6; CX-0289C (Mannheimer) at 174:7-18. The following year, in April 2016, Mannheimer presented another status update noting that [redacted] CX-0007C at 9. [redacted] CX-0007C at 7.

Evidence of that work appeared later. In July 2016, Mannheimer, Block and others filed for a patent. CX-1569. That patent described and claimed openings in a convex surface extending from an interior surface to an exterior surface with an opaque light block separating the openings. CX-1569 at 2:31-39, 4:18-19, 5:25-33, Claim 1. These are precisely among the features much more narrowly claimed in the Multi-Detector Patents.

Apple's counsel must not have been aware of this patent filing. Had he been aware, he would not have denigrated Masimo's earlier patents as improperly claiming "lowest common denominator technology." Tr. (Apple Opening) at 44:18-24. Nor would he have argued that this "type of technology has been known long before these patents were filed, indeed, in some cases, decades before [the Multi-Detector Patents] were filed." *Id.* Apple's development struggles show that it took years for a pulse oximetry engineer with decades of experience to identify what

MASIMO 2042
Apple v. Masimo
IPR2024-00241

he and the Patent Office viewed as inventive. Apple's patenting of that technology confirms that Apple did not believe it is not "old as the hills," as its attorneys argue now. Tr. (Apple Opening) at 53:8.

Apple continued to develop its sensor until September 2020. RX-0333. After Apple's team of engineers and scientists spent six years continuously developing and refining the sensor, Apple finally released its oxygen-saturation-measurement sensor with Series 6.

Apple's lengthy development path, employee skepticism and recognition of the challenges associated with developing its blood-oxygen feature demonstrate that the inventions of the Asserted Claims would not have been obvious to a POSITA, as it was not obvious to a highly educated and experienced team of Apple engineers.

v. Apple's Copying of Masimo's Patented Technology

Apple has long considered Masimo to be the premier provider of non-invasive monitoring technology. Waydo viewed Masimo as an important player and market leader in the area of clinical and in-hospital monitoring. Tr. (Waydo) at 945:10-946:6. Apple evaluated Masimo's devices CX-0285C (Dua) at 106:7-9; *see also id.* at 105:22-107:9; CX-0096C. Apple analyzed Masimo's "fundamentally distinct method of acquiring, processing and reporting arterial oxygen saturation and pulse rate." CX-0125C at 2. Waydo wrote an email about "ideas for the kind of signal processing" Apple considered and explained that Masimo uses "an adaptive filtering approach to empirically determine venous and arterial oxygen saturation." CX-0126C. Apple took apart and evaluated Masimo's forehead reflectance sensor and a finger sensor used on the Apple iPhone,

MASIMO 2042
Apple v. Masimo
IPR2024-00241

[redacted]

called the iSpO2, in 2013. CX-0185C at 3, 17-21, 26-29; CX-1711C at 2. That tear down is depicted earlier in this brief. *Supra* Section III.E.3.h.v.

Madisetti explained Apple's recruitment of Lamego supports his opinion on nonobviousness. Tr. (Madisetti) at 1377:12-1378:10; CX-1461. The offer by Lamego and subsequent hiring of Lamego is consistent with Apple's ongoing effort to recruit engineers with backgrounds in physiological monitoring to overcome the obstacles to designing a physiological monitor for the wrist.

Apple also used Masimo's products as reference standards to evaluate the accuracy of its Apple Watches in 2019 and 2020. *See, e.g.*, CX-0097C at 3 (conducting "Spot checks and short-term (~5min) tests in comparison to the Masimo iSpO2" in 2019); CX-0094C at 1 ("us[ing] Masimo for both spot checks and overnight sessions" in 2020); CX-0285C (Dua) at 52:16-55:9, 58:13-59:5, 67:7-68:11, 96:14-97:9, 105:22-107:9, 114:2-115:18 (Apple used Masimo products as reference sensors to evaluate the Apple Watch pulse oximetry functionality); Tr. (Waydo) at 932:19-933:4; CX-127C. In 2021, Apple engineers scheduled a "Competitive analysis" meeting and circulated a Masimo whitepaper on how to calculate accuracy for pulse oximetry. CX-0092C; *see also* CX-0006C (identifying "our challenging roadmap ahead" for health sensing).

vi. <u>Commercial Success</u>

Masimo presented its economic expert Daniel McGavock, who was admitted as an expert on financial matters, including economic domestic industry, bond, and commercial success. Tr. (McGavock) at 534:25-535:6. McGavock explained the commercial success of the Apple Watch Series 6 and 7 and the nexus to the inventions of the Multi-Detector and '745 Patents. Tr. (McGavock) at 1416:10-21, 1422:8-1425:13; CX-1771C; CX-0132C; CX-0133C; CX-0134C. He explained the sales of the Series 6 far exceeded the other watches Apple provided at the time,

MASIMO 2042
Apple v. Masimo
IPR2024-00241

[redacted]

such as the Series 5 and SE not containing the infringing feature. *Id.*; *see also* CPX-0191 (Series 4 lacks infringing feature). McGavock identified the increased sales of the Accused Products as compared to other Apple Watch models, as showing that the products' success is significantly attributable to the infringing feature. *See* CX-1463C; CX-1467C; CX-1466C. The evidence also showed the commercial success of the Watch Series 6 and 7 is significantly attributable to measuring blood-oxygen levels. Apple advertised the blood-oxygen feature as the key differentiator of the Series 6 over the Series 5 and third-party reviewers confirmed that as the key feature. CX-0252; *see, e.g.*, CX-1532. Apple enjoyed increased sales and accelerated sales growth for Series 6 and 7, compared to Series 5. CX-1289; CX-1287; CX-1451. This evidence demonstrates the nexus between the claimed inventions and the commercial success. Madisetti agreed with that nexus. Tr. (Madisetti) at 1380:14-1381:4.

Apple disputes the nexus between the commercial success and the claimed features. Apple's corporate representative and engineer, Mannheimer, explained the Series 0 to Series 5 watches did not perform pulse oximetry. Tr. (Mannheimer) at 1013:7-20. Mannheimer was instrumental in designing the Series 6 and 7 back crystal for purposes of obtaining pulse oximetry measurements. *Id.* at 1013:21-1014:5. That design added the features claimed in the Asserted patents to Apple's Watches.

When Apple launched the Series 6, the landing page featured the Apple Watch oxygen-saturation measurement at the top of the page. CX-0252; *see, e.g.*, CX-1532. Apple also released the Series 6 with a video. CX-1451. The video asks consumers to "consider a future" with health features provided by the Series 6. The final scene cuts to space and asks consumers to imagine a future with a device using red and infrared light to measure your blood-oxygen level. CX-1451 at 1:28-2:06. It shows astronauts in space holding up their wrists to show this

MASIMO 2042
Apple v. Masimo
IPR2024-00241

ultimate feature: blood-oxygen measurement. *Id.* at 1:46-1:50; *see Apple*, 839 F.3d at 1055-56 (selecting claimed feature for emphasis in commercial supports provides evidence of nexus).

Warren testified "the Apple Watch incorporates a lot of features" and the "blood oxygen feature is only a small fraction of those features [representing] only a small portion of the hardware functionality." Tr. (Warren) at 1242:16-25. But Warren did not explain away the third-party reviewers who confirmed oxygen saturation as the key feature for Series 6 and 7, compared to Series 5. CX-1289; CX-1287; CX-1451. Neither Warren nor any other Apple witness provided an explanation why Apple so heavily emphasized the blood-oxygen feature in its marketing, nor why the sales increased dramatically with the advertising of the addition of pulse oximetry.

4. <u>35 U.S.C. § 112 (pre-AIA)</u>

Apple presents validity positions under 35 U.S.C. § 112 that are in tension with its anticipation and obviousness defenses. Tr. (Warren) at 1246:17-1248:4; RDX-0008.131-136. On one hand, Apple relies on scant disclosures from Lumidigm to argue anticipation and obviousness. On the other, Apple ignores the detailed disclosures of the Multi-Detector Patents when presenting its Section 112 defenses.

a. <u>Written Description</u>

Apple cannot show by clear and convincing evidence that the specification fails to reasonably convey to a POSITA that the inventors had possession of the claimed inventions. *Tobinick v. Olmarker*, 753 F.3d 1220, 1225-27 (Fed. Cir. 2014). This process "requires an 'objective inquiry into the four corners of the specification from the perspective of a [POSITA].'" *Streck, Inc. v. Research & Diagnostic Sys., Inc.*, 665 F.3d 1269, 1285 (Fed. Cir. 2012). The specification "need not explain every detail because a patent is read by those of skill

MASIMO 2042
Apple v. Masimo
IPR2024-00241

[redacted]

in the art." *Wellman, Inc. v. Eastman Chem. Co.*, 642 F.3d 1355, 1367 (Fed. Cir. 2011). Apple ignores the specification and these principles.

i. <u>Claimed Combinations of LEDs, Photodiodes, and Openings with Opaque Surfaces ('501 Patent Claim 12; '502 Patent Claims 22, 28; '648 Patent Claim 12)</u>

Apple argues the specification allegedly does not include a single embodiment with the claimed combinations of (1) LEDs/emitters combined with (2) three or more photodiodes and protrusion openings over with the photodiodes with (3) "opaque lateral surfaces"/"opaque material"/"opaque surfaces". Tr. (Warren) at 1246:17-1247:7; RDX-0008.131. Warren testified, "As an example, the combination of three LEDs, three photodiodes, and a plurality of openings over the photodiodes with opaque lateral surfaces as in claim 12, I can't find a single embodiment." Tr. (Warren) at 1247:3-7. His analysis is incomplete and incorrect.

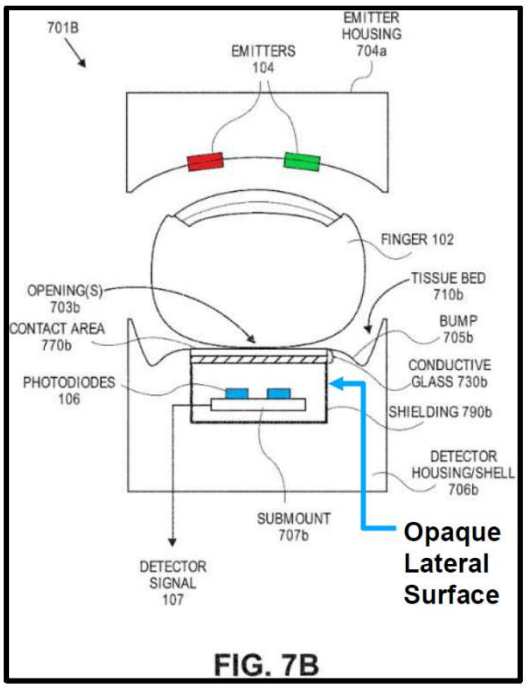

FIG. 7B

The specification also describes a "protrusion" that "can advantageously include plastic, including a hard opaque plastic, such as black or other colored plastic, helpful in reducing light

MASIMO 2042
Apple v. Masimo
IPR2024-00241

[redacted]

noise…. [including] light piping." *Id.* at 7:65-8:7. "The protrusion can thus be helpful in any type of noninvasive sensor" and gave an "external surface … [with] one or more openings or windows." *Id.* at 8:24-26. The specification teaches the "sensor can also include a shielding … embedded within the protrusion" that is "constructed from a conductive material, such as copper, in the form of a metal cage or enclosure" and include "openings or windows … [to] allow light … to pass through to one or more detectors." *Id. at* 8:31-41. It teaches openings in the "hard opaque plastic" and "shielding" of the protrusion allow light to reach the detectors. *Id.* at 8:25-29, 8:35-41. The lateral surface of openings in the protrusion are made of the same material as the protrusion (hard opaque plastic) or its shielding. *See, e.g.*, *id.* at 3B, 3C, 4C, 7B; 8:31-41, 26:64-27:3. Thus, Madisetti confirmed the disclosed protrusion with hard opaque plastic and/or a copper shielding enclosure "includes openings as claimed," and the claimed configurations of LEDs and photodiodes, "within the same embodiment." Tr. (Madisetti) at 1348:15-23.

Further, in its Pre-Hearing Brief (at 127), Apple focused on FIGS. 3-4 only. In asserting lack of written description, Apple accuses Masimo of cobbling together or "stretching" different portions of the Multi-Detector Patents to claim an undescribed embodiment. *See, e.g.*, Tr. at 60:20-61:6. The embodiment of FIG. 3C and accompanying description includes the claimed elements. For example, the description of FIG. 3C even includes openings or windows, where the windows are potentially made of plastic or glass. JX-0001 at 19:38-59; Tr. (Kiani) at 99:17-100:3, 101:6-12.

Apple concedes the specification discloses each of the features. Apple PHB at 127. Madisetti explained the specification also links those features together. Tr. (Madisetti) at 1347:18-1349:6; CDX-0012C.044 (above, showing JX-0001 at FIG. 7B with annotations). Specifically, the specification explains the claimed configurations of LEDs, photodiodes, and

MASIMO 2042
Apple v. Masimo
IPR2024-00241

protrusion openings with opaque lateral surfaces apply to "***any of the sensors described herein***." JX-0001 at 6:65-7:8. FIG. 1 shows "emitter 104" and three or more "detectors 106." FIGS. 7A-7B show "LEDs 104" or "emitters 104" and "photodiodes 106." And FIG. 21 reports data from a sensor that "comprised four LEDs in emitter 104 and four independent detector streams from detectors 106." *Id.* at 44:22-29, 7:13-14. Apple's analysis ignores the disclosed links between specification embodiments and does not support this defense. As explained above, the specification discloses the claimed configurations of LEDs, photodiodes, protrusion openings and opaque surfaces/material apply to FIGS. 3-4. It expressly states the features of the sensors shown or described in various embodiments, including at least FIGS. 1-2, 7A-7B, 13, and 14F-14I, apply to the sensor of FIG. 3. *See, e.g.*, *id.* 6:45-47, 21:51-54, 26:21-29, 38:3-36.

Apple relies on *Flash-Control, LLC v. Intel Corp.*, No. 2020-2141, 2021 WL 2944592, at *3-4 (Fed. Cir. July 14, 2021). Critically, however, Apple omits the Federal Circuit's explanation there that "[a] patent owner cannot show written description support by picking and choosing claim elements from different embodiments that are ***never linked together in the specification***." *Id.* Warren failed to address, and instead ignored, that ***the Multi-Detector Patents' specification repeatedly links the embodiments together***. Tr. (Warren) at 1247:3-7. Apple's other case, *Novozymes A/S v. DuPont Nutrition Biosciences APS*, 723 F.3d 1336, 1349 (Fed. Cir. 2013), is inapposite. Apple PHB at 186. There, the specification failed to disclose even a single chemical species covered by the claims, which concerned "disclosures plucked selectively" from the specification. 723 F.3d at 1349. But here, the claimed devices were not "plucked selectively" from the specification. Rather, the specification expressly linked together the claimed embodiments, as shown above.

MASIMO 2042
Apple v. Masimo
IPR2024-00241

In view of these disclosures, Madisetti explained "[t]here is full written description support for multiple LEDs, three or more photodiodes, and opaque lateral surfaces." Tr. (Madisetti) at 1347:20-1349:6.

ii. Sets of LEDs Each Emitting at a First Wavelength and a Second Wavelength ('502 Patent Claim 28)

Apple argues the specification does not provide written-description support for '502 Patent Claim 28 because Warren alleged he did not find "any discussion in the Poeze specification of the use of multiple sets of LEDS each with LEDs emitting at a first wavelength and a second wavelength" Tr. (Warren) at 1247:13-17; RDX-0008.134. Warren's entire testimony on this issue was: "I have not found one, no." Tr. (Warren) at 1247:17.

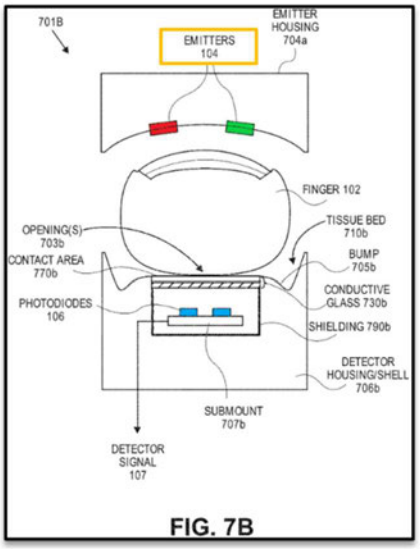

Conversely, Madisetti explained the specification support for sets of LEDs each emitting at a first wavelength and a second wavelength. Tr. (Madisetti) at 1349:7-1350:3; CDX-0012C.45 (reproduced above, showing JX-0001 at FIG. 7B). He explained the specification discloses embodiments with multiple, spaced-apart emitters having sets of LEDs to emit light at two or more wavelengths as claimed. *Id.*; *see, e.g.*, JX-0001 at FIGS. 7A-7B (showing LEDs

MASIMO 2042
Apple v. Masimo
IPR2024-00241

and emitters 104), 13, 14I; 9:60-63, 12:9-12 ("In an embodiment, the emitter 104 includes ***sets of optical sources*** that are capable of ***emitting visible <u>and</u> near-infrared optical radiation***."), 12:13-25 ("[T]he one or more optical sources of the emitter 104 can be located within a close distance to each other…. Other relative spatial relationships can be used to arrange the emitters 104."), 13:16-21, 33:30-38, 21:51-54, 38:8-22.

iii. <u>"At Least Four Emitters … Wherein Each of the Plurality of Emitters Comprises a Respective Set of at Least Three LEDs" ('502 Patent Claim 22)</u>

Apple also argues '502 Patent Claim 22 lacks written description because Warren never "identified any discussion or any embodiments in the Poeze specification that include four emitters each with three LEDs." Tr. (Warren) at 1247:8-12; RDX-0008.133. Warren testified in a single word: "No." *Id.* Warren's testimony could not be more conclusory or incomplete.

Madisetti explained the specification support for four emitters each with three or more LEDs. Tr. (Madisetti) at 1349:7-1350:3; CDX-0012C.045. As explained above, the specification discloses embodiments with multiple, spaced-apart emitters having sets of LEDs to emit light at two or more wavelengths. *Supra* Sections III.E.5.a.i-ii; *see, e.g.*, JX-0001 at FIGS. 7A-7B (showing LEDs and emitters 104), 13 (showing "EMITTER SET_1" through "EMITTER SET_n" where n is the number of photodetectors), 3E (showing four detectors 316), 14I; 9:60-63, 12:9-12, 12:13-25, 12:35-44, 13:16-21, 33:30-38, 21:51-54, 38:8-22. Madisetti thus confirmed that the specification discloses at least four emitters each comprising a respective set of at least three LEDs. Tr. (Madisetti) at 1349:7-1350:3, 1350:22-1353:2; CDX-0012C.045.

b. <u>Enablement</u>

Apple failed to show that a POSITA would need ***any*** experimentation to practice the Asserted Claims, much less the need for "undue experimentation." *AK Steel Corp. v. Sollac &*

MASIMO 2042
Apple v. Masimo
IPR2024-00241

[redacted]

Ugine, 344 F.3d 1234, 1244 (Fed. Cir. 2003). Thus, Apple cannot show by clear and convincing evidence that the specification fails to enable any of the Asserted Claims.

i. <u>"Touch-Screen Display" and "Indicia of Measurements" ('502 Patent Claim 28)</u>

Apple argues that the '502 Patent does not enable the "user interface comprising a touch-screen display" of Claim 28. Tr. (Warren) at 1247:19-23; RDX-0008.135. Apple asked Warren a single question on this issue: "Have you identified anything in the Poeze specification that would tell a person of skill in the art how to implement a user interface with a touchscreen?" Tr. (Warren) at 1247:19-21. Warren gave a one-sentence response: "I have only found two brief references to touchscreens, so no." *Id.* at 1247:22-23. This is not clear and convincing evidence of a lack of enablement.

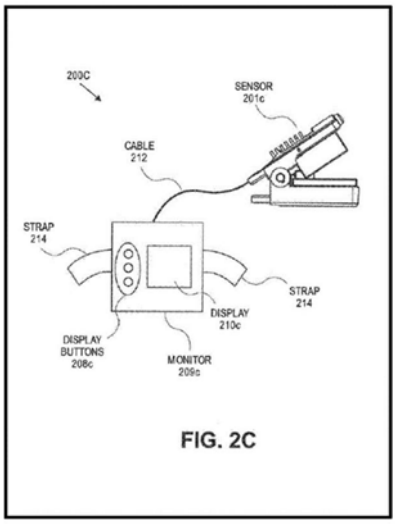

FIG. 2C

Madisetti explained the specification discloses a user-worn touchscreen display that can display an oxygen-saturation measurement and measurements of other analytes. Tr. (Madisetti) at 1352:5-24, 1382:6-11; CDX-0012C.047; *see, e.g.*, JX-0001 at FIGS. 2A-2D, 16:39-42, 17:20-26, 17:67-18:3, 18:16-19, 17:55-62. The specification discloses the features of the monitoring devices 200 shown in FIGS. 2A through 2D can be combined with features of the other

MASIMO 2042
Apple v. Masimo
IPR2024-00241

[redacted]

monitoring devices 200 shown." JX-0001 at 16:39-42. It further discloses "[t]he monitoring device 200a can employ any of a variety of user interface designs, such as … touch-screens" to display measurements. *Id.* at 17:20-26. Warren conceded he found two references to touchscreens. Tr. (Warren) at 1247:22-23. The specification also explains the monitors can include a display to indicate a measurement for glucose and other analytes. *See, e.g.*, JX-0001 at 17:67-18:3, 13:39-41 (some embodiments may be configured to measure analytes, such as oxygen saturation). FIG. 2C (reproduced above) discloses "[t]he monitor 209c shown also includes straps 214c that ***allow [it] to be attached to the patient's limb*** or the like." *Id.* at 18:9-19, FIG. 2C; *see, e.g.*, *id.* at 17:55-62, 10:22-24.

Madisetti confirmed based on these disclosures a POSITA would have known how to make and use a user-worn device comprising a touch-screen display configured to display indicia responsive to the oxygen-saturation measurement. Tr. (Madisetti) at 1382:6-11. Thus, "the touchscreen display and indicia of measurement are fully enabled." *Id.*

ii. <u>Reducing/Avoiding "Light Piping" ('501 Patent Claim 12; '502 Patent Claim 28; '648 Patent Claim 24)</u>

Apple argues the phrase "wherein the protrusion comprises opaque material configured to substantially prevent light piping" of '648 Patent Claim 24: (1) lacks written description and (2) lacks enablement. Tr. (Warren) at 1247:24-1248:4; RDX-0008.136. Apple asked Warren a single question on this issue: "Have you seen anything in the Poeze specification that provides guidance on reducing or avoiding light piping other than a general reference to the use of opaque materials." *Id.* Warren responded "No. I've just seen a vague correlation between the two, that's it." *Id.* That, too, is not clear and convincing evidence of a lack of written description or enablement.

MASIMO 2042
Apple v. Masimo
IPR2024-00241

The specification teaches multiple ways to reduce or avoid light piping. It describes using a hard opaque plastic material for the protrusion, which reduces light piping. JX-0001 at 7:65-8:7. It also discloses adding height to the protrusion "assists in deflecting light piped through the sensor." *See, e.g.*, *id.* at 25:47-62, 7:65-8:7. The added height allows light to pass through the walls ***around*** the sensor rather than being directed toward the detectors. *Id.* at 25:47-59. The specification also discloses noise shields "constructed from materials having an opaque color, such as black or a dark blue, to prevent light piping." *Id.* at 43:32-36. Madisetti explained that these disclosures teach how to reduce or avoid light piping. Tr. (Madisetti) at 1350:4-21, 1352:25-1353:11; CDX-0012C.046. Indeed, Warren acknowledged that the specification describes light piping, and hard opaque plastics that reduce or avoid it. Tr. (Warren) at 1247:24-1248:4.

A POSITA would have understood that light piping could be reduced or avoided using the above-described solutions in the specification.

F. <u>Enforceability (Prosecution Laches)</u>

To establish laches, Apple bore the burden of establishing "unreasonable and unexplained delay in prosecution" and prejudice. *Cancer Research Tech. Ltd. v. Barr Labs., Inc.*, 625 F.3d 724, 728-29 (Fed. Cir. 2010). Prosecution laches "may render a patent unenforceable" when unreasonable and unexplained delay "constitutes an egregious misuse of the statutory patent system …." *Id.* at 728. The Federal Circuit has approved of prosecution laches only three times—each time involving decades-long delays not at issue here, in prosecution of pre-GATT patents. *See Hyatt v. Hirshfeld*, 998 F.3d 1347, 1361, 1372 (Fed. Cir. 2021). Apple did not even attempt to meet its burden to show prosecution laches, especially for these post-GATT applications.

MASIMO 2042
Apple v. Masimo
IPR2024-00241

First, Apple established no unreasonable and unexplained delay. All testimony was to the contrary. Apple's sole witness, Masimo's patent lawyer, Scott Cromar, testified there was no delay during the alleged 12-year period touted by Apple in its opening statement. Tr. (Cromar) at 1036:19-21 (discussing prosecution from 2008-2012). To the contrary, there were "over 30 applications or continuations filed and actively prosecuted …." *Id.* at 1036:6-18. Cromar also testified there were "a dozen applications being actively prosecuted" during the alleged five year "gap" relied on by Apple. *Id.* at 1039:7-12 (discussing prosecution from 2010-2015). Cromar explained that Apple's opening slide on laches omitted many of these filings, such that Apple's slide was a "misrepresentation." *Id*. at 1038:10-19.

Masimo also presented unrebutted expert testimony from Robert Stoll, the former USPTO Commissioner for Patents, who is an "expert on Patent Office practice and procedure." *Id*. at 1409:9-1410:5; CX-0331. Stoll opined there was a "continuous unbroken chain of patent prosecution. There was no delay." Tr. (Stoll) at 1415:2-10; *see also* CX-1621, CX-1622, CX-1623 (prosecution histories). Stoll outlined the various ways a patentee might delay prosecution and found "***none*** of those actions that occurred." *Id.* at 1413:10-25. Apple did not cross-examine Stoll on any of his testimony.

Second, Apple identified no prejudice arising from any unreasonable or unexplained delay. Apple presented no witnesses on this issue and no evidence it would have changed course if Masimo had prosecuted its patents differently. Stoll explained that the specification was published and available to the public on February 4, 2010. *Id*. at 1412:7-16; CX-0137.

Rather than prove any actual element of laches, Apple attempted to show that Masimo's patent filings followed the releases of Apple's watches. Tr. at 52:12-24. In its opening statement, Apple promised to show the timing of Masimo's filings was "not a coincidence at

MASIMO 2042
Apple v. Masimo
IPR2024-00241

all." *Id.* at 22-24. Cromar rejected any such "correlation," testifying, "I don't think so, especially because a huge portion of the prosecution happened before any Apple Watch was released." Tr. (Cromar) at 1040:1-9. Cromar also explained that other events occurred, such as Apple producing prior art through IPRs and the district court case and Masimo's development of its watch. *Id.* at 1034:11-1035:19. Regardless, even if Apple could show such a correlation, there is nothing improper or inequitable about drafting claims to cover a competitor's product. *See Kingsdown Med. Consultants, Ltd. v. Hollister, Inc.*, 863 F.2d 867, 874 (Fed. Cir. 1988). Because Apple's laches defense fails, it has not established unclean hands either.

IV. '745 PATENT

Apple infringes '745 Patent Claims 9 and 27. The 745 DI Products practice Claim 18.

A. Level of Ordinary Skill in the Art

The parties stipulated to the same level of ordinary skill as the Multi-Detector Patents. Doc. ID. 770692 ¶10; Tr. (Madisetti) at 1328:15-1329:2; Tr. (Sarrafzadeh) at 1089:1-15; CDX-0012C.004; RDX-0007.81C.

B. Claim Construction

1. "second shape"

The parties briefed one term, "second shape," from Claims 1 and 20. The currently proposed constructions for "second shape" are:

Masimo's Proposed Construction	Apple's Proposed Construction
A shape that is different from the first shape, where a difference in size, without any other difference, is not a shape different from the first shape"	Plain and ordinary meaning (*i.e.*, a shape different than the first shape).

Apple clarified after the Markman hearing that "both sides agree that a mere difference in size is neither necessary nor sufficient to change a first shape into a 'second shape.'" Doc. ID

MASIMO 2042
Apple v. Masimo
IPR2024-00241

763856 at 3 n.1. Given this clarification, the difference in proposed constructions do not affect the issues presented. Madisetti's infringement opinions do not change under either construction. Tr. (Madisetti) at 731:2-24.

2. "first shape"

Despite not proposing any construction for "first shape" in **[1A]** and **[20A]**, Sarrafzadeh applied a narrow interpretation in his noninfringement testimony. He limited "first shape" to mean the shape of light precisely at the LED emission surface. He also argued the claim required that the shape of light cannot change between the LED emission surface and the claimed "material." *See* Tr. (Sarrafzadeh) at 1111:23-1112:18.

Neither argument is supported by the claim language. Claims 9 and 27 do not limit the "first shape" to the shape at the emission surface of the LEDs. *See* JX-0009 at Claims 9, 27. The claim language imposes no requirement that the "first shape" remain the same until it reaches the "material." *See* Tr. (Madisetti) at 746:13-747:2. Rather, the term "first shape" refers to any shape emitted by the LEDs before the claimed "material" changes it. *See, e.g.*, Landis, "Mechanics of Patent Claim Drafting," 2d ed (1974) (noting the convention of using "first" and "second" to designate two similar but different elements) (Appendix C); MPEP § 2111.03 (9th ed.) (2020) ("first," "second," and "third" used to distinguish various members of the group, not to show a serial or numerical limitation).

The specification also does not limit the "first shape" to the LED emission surface. Instead, the light diffuser "receives the optical radiation from the emitter" and spreads the optical radiation over an area. JX-0009 at 7:42-44. The specification further describes "a beam shaper that can homogenize the input light beam from the emitter 302, shape the output intensity profile of the received light, and define the way (e.g., the shape or pattern) the emitted light is

MASIMO 2042
Apple v. Masimo
IPR2024-00241

[redacted]

distributed to the tissue measurement site 102." JX-0009 at 7:44-49; *id.* at 3:8-14, 4:23-28, 7:54-56, 11:2-6. This disclosure does not require that the input light beam from the emitter remain the same shape until it reaches the beam shaper.

Sarrafzadeh argued that the shape of light emitted by an LED would change in a gap between the LED and the claimed material. Tr. (Sarrafzadeh) at 1114:15-1115:1. But a requirement that the first shape remains the same until it reaches the "material" would exclude embodiments where the light emitter does not contact the shape changing material, such as FIG. 3. *See* Tr. (Madisetti) at 746:6-747:2; CDX-0011C.089-090; JX-0009 at FIG. 3 (below); *Vitronics*, 90 F.3d at 1583 (claim interpretation excluding a preferred embodiment is "rarely, if ever, correct"); *Verizon Servs. Corp. v. Vonage Holdings Corp.*, 503 F.3d 1295, 1305 (Fed. Cir. 2007) (rejecting claim interpretation that would exclude disclosed examples in the specification).

Figure 3 shows a light emitter 302 that is ***not*** in contact with the light diffuser 304. The diffuser 304 nonetheless changes the shape of light from a point source into a rectangle, square, or circle. JX-0009 at 7:42-44, 7:63-66, 8:9-14.

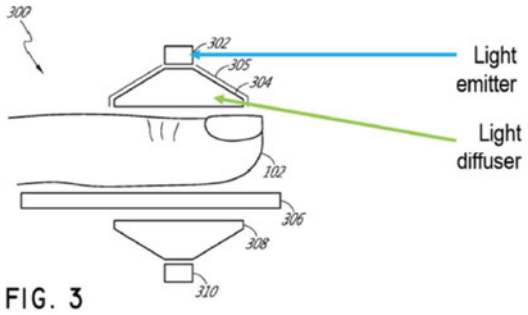

FIG. 3

Regardless, as explained below, Madisetti analyzed the "first shape" both at the surface of the LED and immediately before the material, and concluded that the material changes the first shape into a second shape.

MASIMO 2042
Apple v. Masimo
IPR2024-00241

[redacted]

C. Infringement

1. Claim 9

Apple does not dispute that the Accused Products satisfy: **[1PRE], [1A], [1C], [1D], [1E], [1F],** and **[9]**. *See* Tr. (Sarrafzadeh) at 1111:19-1120:13. Apple disputes only **[1B]**. *Id.*

a. Element [1PRE]

The Accused Products satisfy **[1PRE]**. Each Accused Products is a physiological monitoring device that can measure a user's oxygen saturation. *See, e.g.*, Tr. (Madisetti) at 729:24-730:6; CX-0241C ("a new Blood Oxygen app that measures the oxygen in your blood"), CX-1532 at 4-5 (describing blood-oxygen feature); CX-1447 at 7; CX-1449 at 2.

CX-1532 at 4 .

b. Element [1A]

The Accused Products satisfy **[1A]**. Each Accused Product contains four sets of red, infrared, and green LEDs (shown below) used for the blood-oxygen feature. *See, e.g.*, Tr. (Madisetti) at 730:7-731:1; CX-0281C (Block) at 83:11-85:16 (identifying four groups of three

MASIMO 2042
Apple v. Masimo
IPR2024-00241

[redacted]

LEDs); Tr. (Mehra) at 855:4-12, 856:7-14; CX-0057C at 2 (identifying red, IR, and green LEDs); CX-0059C at 2; CX-0297C (Venugopal) at 53:16-54:11, 55:11-14.

[redacted]

CX-1548C at 37.

Madisetti directed testing of the Accused Products to capture the shapes of light emitted by the LEDs. Tr. (Madisetti) at 728:14-729:23; 741:15-742:20 (further explaining tests); CX-0307iC (report); CX-1647C (images of test setup); CX-1546C (test results). The images below show the light emitted by the green, red, and infrared LEDs at the surface of the LEDs.

Green (Surface)	Red (Surface)	IR (Surface)
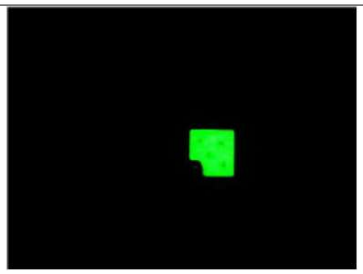	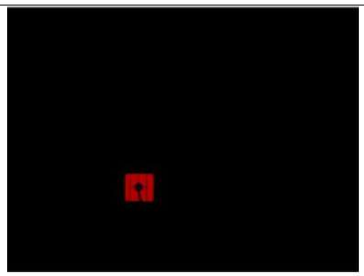	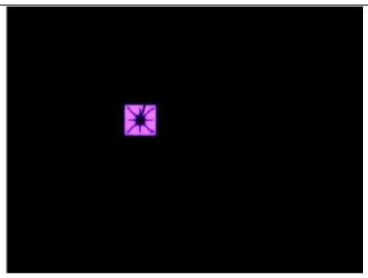

CX-1546C at 5, 15, 1; Tr. (Madisetti) at 730:14-21.

MASIMO 2042
Apple v. Masimo
IPR2024-00241

[redacted]

The ’745 Patent discloses using “microlens-based” diffusers for efficient illumination. JX-0009 at 3:5-14. The Accused Products include [redacted] called “[redacted]” Tr. (Madisetti) at 731:25-732:24. Madisetti also captured light emitted from the LEDs before entering the MLA. Tr. (Madisetti) at 745:5-25, 787:11-23; CX-0307iC at 9 (test methodology). Madisetti directed testing to measure the distance between the LEDs and the MLA. *Id.* Photographs that approximate how the light would appear when it reaches the MLA are shown below:

Green (Before MLA)	Red (Before MLA)	IR (Before MLA)
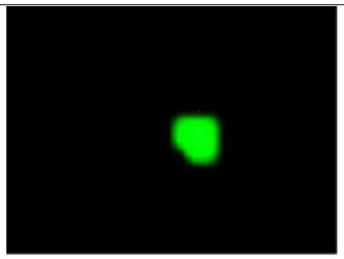	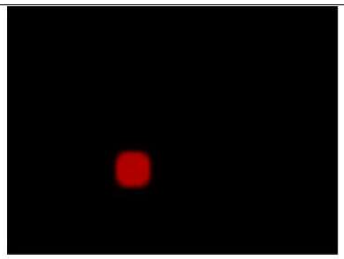	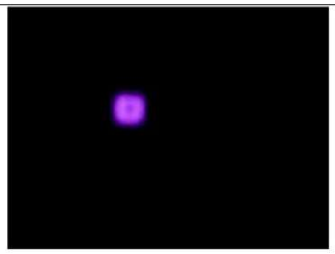

CX-1546C at 5, 15, 1; Tr. (Madisetti) at 745:11-15, 747:3-12; *see also* CDX-0011C.091 (summarizing testing images). Thus, the LEDs in the Accused Products emit light in a first shape.

c. <u>Element [1B]</u>

The Accused Products satisfy **[1B]**. They include an MLA shown below. Tr. (Madisetti) at 731:25-732:24.

MASIMO 2042
Apple v. Masimo
IPR2024-00241

[redacted]

[redacted]

CX-0055C at 1. Apple does not dispute that the MLA is positioned between the LEDs (shown by the glowing lights below) and the wrist when the device is in use or that the light is projected towards the tissue. Tr. (Madisetti) at 731:25-732:24; CX-0010; CX-0242 at 4; CX-0052C at 5; CX-0061C at 2; CX-0063C at 2; CX-0297C (Venugopal) at 55:11-14, 67:20-68:9; CX-0281C (Block) at 84:7-85:1.

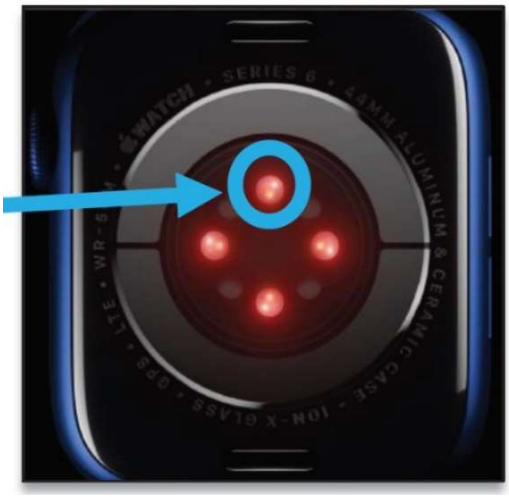

CDX-0011C.076 (citing CX-0242); CX-0297C (Venugopal) at 115:10-17.

The parties agree that the MLA is a material, but dispute whether it is "configured to change the first shape into a second shape." The evidence shows that the MLA changes the shape of light.

[redacted]

Madisetti's testing determined whether the MLA changes the light from a first shape into a second shape. Tr. (Madisetti) at 728:11-729:23, 741:15-742:20, 787:11-23; CX-0307iC at 4-21 (test methodology and results). The testing resulted in images of the light emitted from the LEDs (1) at each LED's surface, (2) before the MLA, and (3) after the MLA. The table below shows results for the green, red, and IR LEDs. The first column (Surface) shows the shapes emitted at the emission surface. The second column (Before MLA) shows the shapes emitted at a distance that approximates light incident on the MLA. The third column (After MLA) shows the shapes after passing through the MLA.

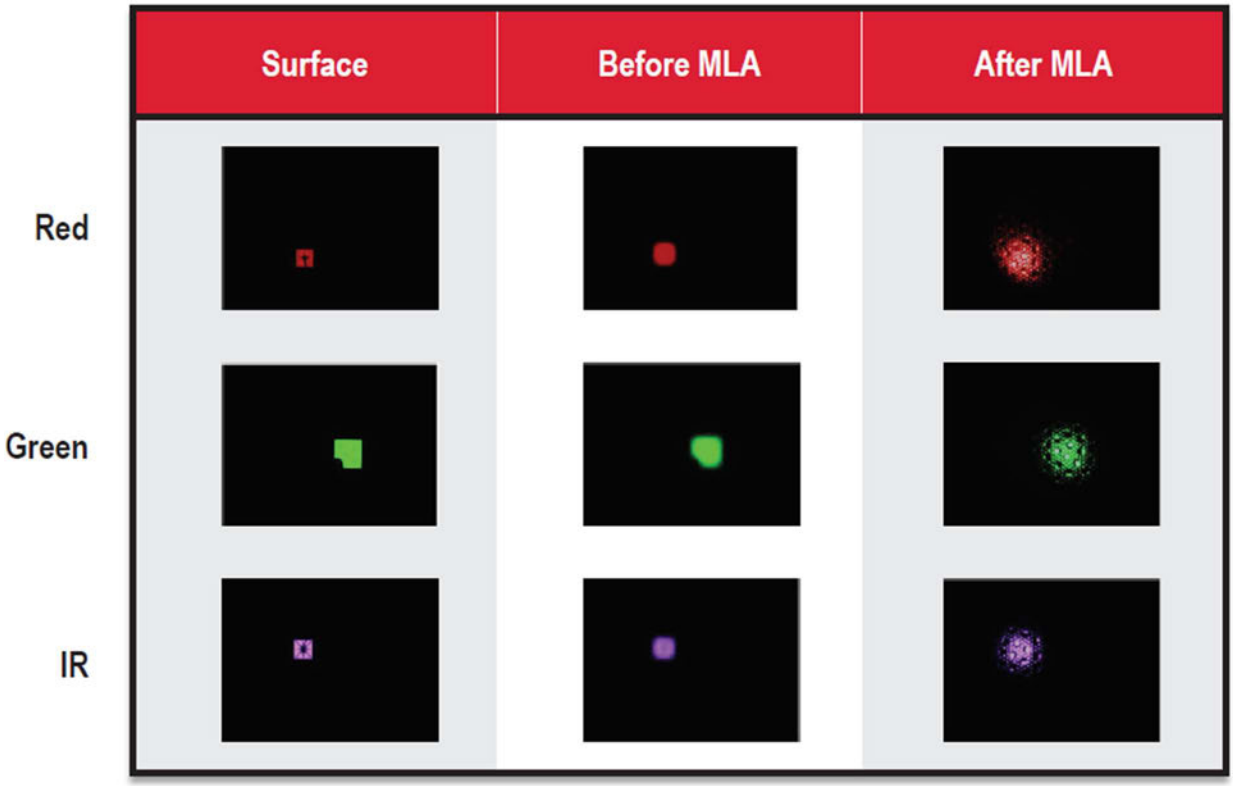

CDX-0011C.091 (citing CX-1546C at 1, 5, 15); *see also* Tr. (Madisetti) at 732:25-733:18, 747:3-12.

MASIMO 2042
Apple v. Masimo
IPR2024-00241

Comparisons between Columns 1 and 3 or between Columns 2 and 3 both confirm that the MLA changes the shape of light emitted from the LEDs from a first shape to a second shape. Tr. (Madisetti) at 732:25-733:18, 747:3-12. The Accused Products satisfy **[1B]**.

Sarrafzadeh's criticisms of Madisetti's analysis are flawed. ***First,*** Sarrafzadeh argued that the light shape before the MLA differs from the "first shape" at the emission surface due to Lambertian emission. *See* Tr. (Sarrafzadeh) at 1114:14-1117:17. Sarrafzadeh provided no evidence to support his testimony. As explained above, Sarrafzadeh narrowly interpreted "first shape" to mean the light emitted precisely at the LED surface. Tr. (Sarrafzadeh) at 1112:5-18.

But more importantly, he performed the wrong comparison. Claim 9 does not call for any comparison of the shape of light at two points ***before*** the claimed "material." It recites material "configured to change the first shape into a second shape." JX-0009 at Claim 9. Thus, the correct comparison is the shape of light before and after the claimed "material," here the MLA. Apple admitted as much in opening: "the relevant comparison is between the shape of the light when it reaches the MLA and the shape of the light when it emerges from the MLA." Tr. (Apple Opening) at 65:20-23. Moreover, Madisetti's testing confirms that the MLA changes Sarrafzadeh's "first shape" into a different shape. CDX-0011C.091 (citing CX-1546C at 1, 5, 15); *see also* Tr. (Madisetti) at 732:25-733:18, 747:3-12.

Second, Sarrafzadeh argued that the MLA does not change the shape of light. Instead, he believed the shape of light both at the input to and exit from the MLA "are more or less a circular form." *See* Tr. (Sarrafzadeh) at 1118:1-24; RDX-0007.144. In his view, the shapes of light at the "Input to MLA" and "Exit from MLA," shown below, are the same. Tr. (Sarrafzadeh) at 1129:21-25.

MASIMO 2042
Apple v. Masimo
IPR2024-00241

[redacted]

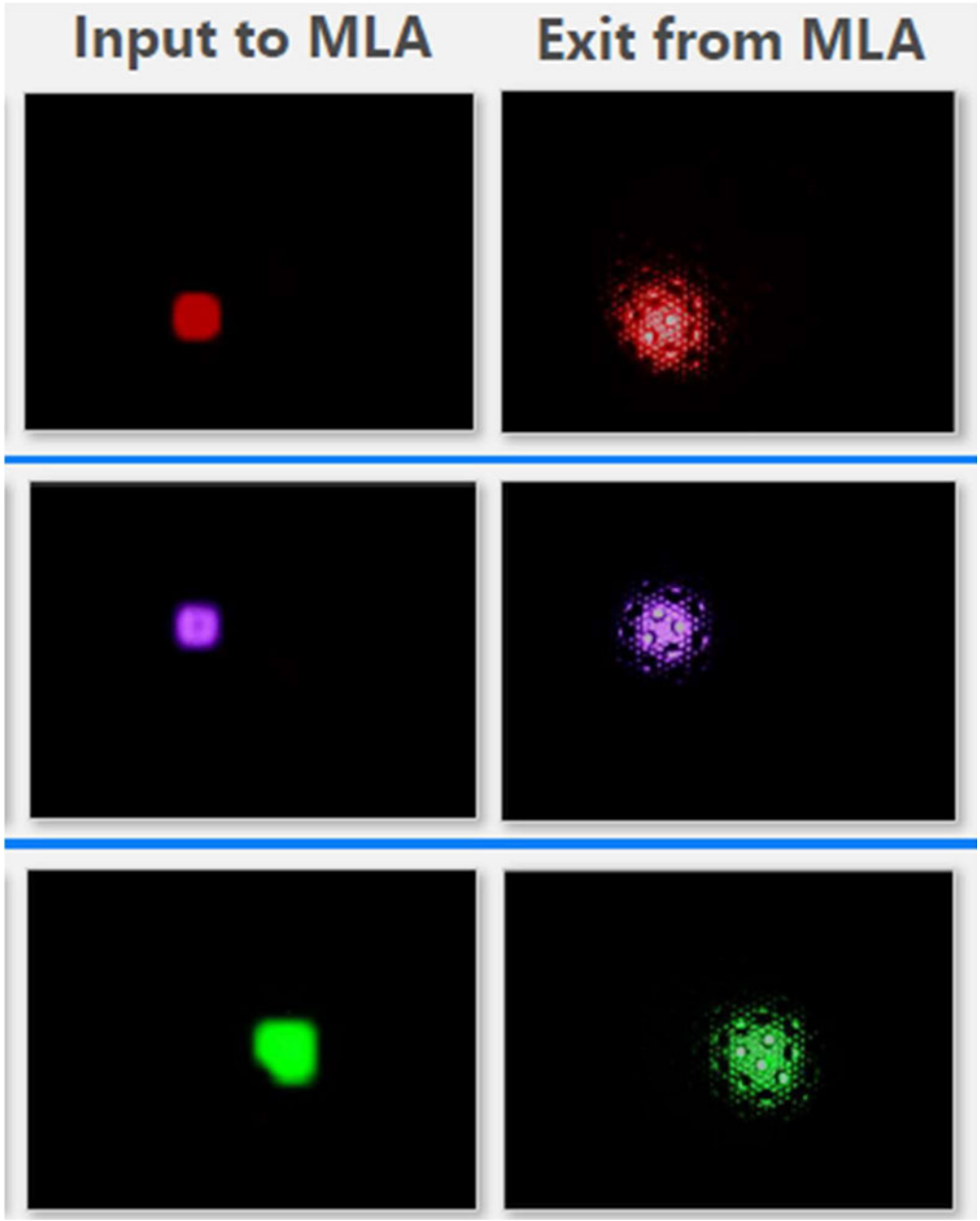

RDX-0007.144C (citing CX-0307iC). As is self-evident from these images, one of these things is not like the other, these shapes are not the same. The [redacted] changes the shape of light. *See* Tr. (Madisetti) at 747:3-12; CDX-0011C.091 (citing CX-1546C).

MASIMO 2042
Apple v. Masimo
IPR2024-00241

Sarrafzadeh also criticized the "Exit from MLA" photos as deficient for failing to show light at the dark spots. Tr. (Sarrafzadeh) at 1118:1-8. But he provided no testing or explanation of why there should be light at the dark spots. *See Rohm and Haas Co. v. Brotech Corp.*, 127 F.3d 1089, 1092 (Fed. Cir. 1997) (nothing requires fact finder to credit unsupported assertions of an expert). Madisetti's photos show the light from the MLA.

Apple's witness testimony and documents also demonstrate infringement. Tr. (Mannheimer) at 1020:8-1021:1; Tr. (Madisetti) at 777:11-779:3. Tr. (Venugopal) at 828:1-829:14.

MASIMO 2042
Apple v. Masimo
IPR2024-00241

[redacted]

RX-0895C at 317 (excerpted). [redacted] Tr. (Venugopal) at 829:3-14; Tr. (Madisetti) at 777:11-779:3; CX-0104C at 3-4 ([redacted] Accordingly, the evidence demonstrates that the [redacted] changes the shape of light.

d. <u>Element [1C]</u>

Apple does not dispute that the Accused Products satisfy **[1C]**. They contain four photodiodes that detect light emitted from the LEDs after the light passes through the user's tissue, as shown below.

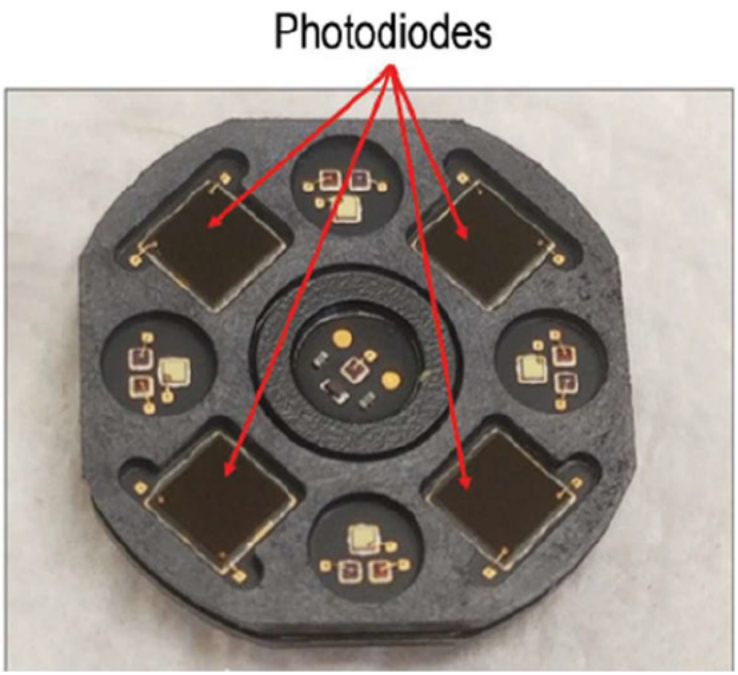

CX-1548C at 37; *see also* Tr. (Madisetti) at 733:19-734:15; Tr. (Mehra) at 855:4-12; CX-1646C; CX-0057C; CX-0059C at 2; CX-0297C (Venugopal) at 95:5-96:11.

Each photodiode outputs at least one signal responsive to the detected light. *See, e.g.*, Tr. (Madisetti) at 733:19-734:15; CX-0281C (Block) at 71:21-72:5, 72:11-17; CX-0242 at 3 ("the

MASIMO 2042
Apple v. Masimo
IPR2024-00241

Blood Oxygen sensor employs … four photodiodes on the back crystal of Apple Watch, to measure light reflected back from blood."); CX-0100C at FIGS. 4-5; CX-0299C (Waydo) at 28:22-29:8; CX-0281C (Block) at 87:4-88:9.

e. <u>Element [1D]</u>

Apple does not dispute the Accused Products satisfy **[1D]**. Madisetti showed that the Accused Products have a surface comprising a dark-colored coating, that the surface is positioned between the plurality of photodiodes and the tissue when the Accused Products are in use, and an opening is defined in the dark-colored coating that is configured to allow light reflected from the tissue to pass through the surface. Tr. (Madisetti) at 734:16-735:18; Tr. (Block) at 901:13-902:3; CX-0068C at 5; CX-0297C (Venugopal) at 188:16-189:1, 192:14-194:15 (explaining ink layers); CX-0291C (Mehra) at 105:20-106:14, 111:19-112:8; CX-0072C at 30.

CX-0070C at 5 (excerpted).

MASIMO 2042
Apple v. Masimo
IPR2024-00241

[redacted]

f. Element [1E]

Apple does not dispute the Accused Products satisfy **[1E]**. Madisetti explained the Accused Products include an "Optical Barrier" in the [redacted] module, as identified in the red box below. Tr. (Madisetti) at 735:19-736:19.

[redacted]

CX-0059C at 1; *see also* CX-0057C at 1.

Madisetti explained that the "optical barrier prevents light from the LEDs from reaching the photodiodes without first reaching the tissue." *See* Tr. (Madisetti) at 735:19-736:19; *see also* CX-0297C (Venugopal) at 92:6-93:3; CX-0281C (Block) at 59:5-20; 61:3-6, 81:5-22.

MASIMO 2042
Apple v. Masimo
IPR2024-00241

[redacted]

g. Element [1F]

Apple does not dispute that the Accused Products satisfy **[1F]**. Madisetti explained the Accused Products each include a processor that receives signals outputted from the photodiodes and processes those signals to determine oxygen saturation through its execution of the [redacted] algorithm. Tr. (Madisetti) at 678:13-679:9, 736:20-737:12; *see also* CX-0013C at 12; CX-0100C at FIGS. 4, 5; CX-0299C (Waydo) at 38:19-22, 39:2-6, 50:11-14, 68:12-21, 72:10-22, 73:16-19; CDX-0011C.081 (annotating CX-0013C and CX-0100C).

h. Element [9]

Apple does not dispute that the Accused Products satisfy **[9]**. As explained for **[1PRE]** and **[1F]**, the Accused Products measure and output a user's oxygen-saturation value. Tr. (Madisetti) at 737:13-23; CX-1532 at 4; CX-1447 at 7; CX-0241C.

Accordingly, the Accused Products infringe Claim 9. *See* Tr. (Madisetti) at 737:24-738:4.

2. Claim 27

Apple indirectly infringes Claim 27 by actively inducing end-users to use the Accused Products to infringe. An Accused Product, when paired with an end-user's iPhone, forms a system ("Watch System"). That Watch System satisfies each element of Claim 27. Apple does not dispute that the Accused Products practice: **[20PRE]**, **[20A]**, **[20C]**, **[20D]**, **[20E]**, **[20F]**, **[20G]**, and **[27]**. Tr. (Sarrafzadeh) at 1111:19-1120:13. Apple disputes only **[20B]** for the same reasons it disputes **[1B]**. *Id.*

Apple also does not dispute its knowledge of the '745 Patent or its inducing acts. Apple knew of the '745 Patent at least since June 30, 2021, when Masimo filed the original complaint in this Investigation. CX-1254C at 35 (Apple admitting knowledge of the '745 Patent as of June

MASIMO 2042
Apple v. Masimo
IPR2024-00241

30, 2021); Doc. ID 745719 (original Complaint filed June 30, 2021); Doc. ID 746189 (First Amended Complaint filed July 7, 2021); *Certain Television Sets*, Inv. No. 337-TA-910, Doc. ID 568157, Comm'n Op. at 41 (Oct. 30, 2015) ("In the context of section 337, we conclude that service of a section 337 complaint can be adequate to provide knowledge of the asserted patents"). In accordance with 19 C.F.R. § 210.12(a)(9)(viii), the Complaint provided detailed infringement charts for the '745 Patent claims, including Claim 27. *See* Doc. ID 745719 at Ex. 18. Thus, Apple knew that its acts caused direct infringement by end-users. *Roche Diagnostics Corp. v. Meso Scale Diagnostics*, 30 F.4th 1109, 1117-18 (Fed. Cir. 2022) (induced infringement requires knowledge that the induced acts constitute infringement); *Certain Beverage Brewing Capsules*, Inv. No. 337-TA-929, Comm'n Op. at 19-21 (Apr. 5, 2016) (finding ITC complaint sufficient to provide knowledge that respondent's acts constituted infringement).

Apple requires end-users to pair their Apple Watches with their iPhones before they can use the watches. CX-1727 at 1 ("To use your Apple Watch Series 3 or later with watchOS 8, ***you need to pair your Apple Watch with an iPhone 6s or later*** with iOS 15 or later."). Apple also instructs end-users on how to enable their Apple Watches to perform blood-oxygen measurements, how to measure their blood oxygen with the Apple Watch, and how to view the blood-oxygen measurements on the iPhone Health app. *See* Tr. (Madisetti) at 738:25-740:5; CX-0010 at 2-5; CDX-0011C.085 (summarizing CX-0010, CX-0299C (Waydo) at 74-75, CX-1447, CX-1727). Apple does not deny that end-users use their Apple Watches and the blood-oxygen feature. Tr. (Waydo) at 940:14-941:24 (describing press reviews and feedback for the blood-oxygen feature in the Accused Products), 943:8-13 (confirming Apple receives customer feedback about the blood-oxygen feature); CX-1606; CX-1608 at 18; Tr. (Warren) at 1251:5-9.

MASIMO 2042
Apple v. Masimo
IPR2024-00241

[redacted]

a. Element [20PRE]

The Watch System satisfies **[20PRE]**. Tr. (Madisetti) at 738:25-740:5. Apple does not dispute that the system satisfies **[20PRE]**. As explained for **[1PRE]**, **[1F]**, and **[9]**, the Accused Products are physiological-monitoring devices configured to measure one or more of a user's physiological parameters, including blood-oxygen saturation. *See* Tr. (Madisetti) at 739:2-9, 730:7-731:1; 737:13-23; *see also* CX-1447 at 7 (describing blood-oxygen feature). As described above, the Accused Products are paired with an iPhone to form a Watch System.

b. Elements [20A]-[20F]

The Watch System satisfies **[20A]-[20F]** for the same reasons as explained above with respect to **[1A]-[1F]**, respectively. Tr. (Madisetti) at 738:13-20; CDX-0011C.083 (cross-referencing arguments for **[20A]-[20F]** with **[1A]-[1F]**).

Apple disputes **[20B]** for the same reasons it disputes **[1B]**. *See* Tr. (Sarrafzadeh) at 1111:19-1120:14. Apple's arguments regarding **[20B]** fail for the reasons explained above for **[1B]**.

c. Element [20G]

The Watch System satisfies **[20G]**. Apple does not dispute that the system satisfies **[20G]**. Madisetti explained that a user's iPhone is a processing device with a user interface (*e.g.,* the touchscreen display and software buttons on the screen), a storage device, and a network interface configured to wirelessly receive blood-oxygen-saturation data from the paired watch. Tr. (Madisetti) at 740:6-24; CX-0299C (Waydo) at 74:11-16, 75:1-5, 75:7-9, 75:11-17; CX-1492 at 4; CX-0100C at 7. As shown below, the iPhone touchscreen is configured to present visual feedback responsive to the user's blood-oxygen-saturation data through the Health app.

MASIMO 2042
Apple v. Masimo
IPR2024-00241

[redacted]

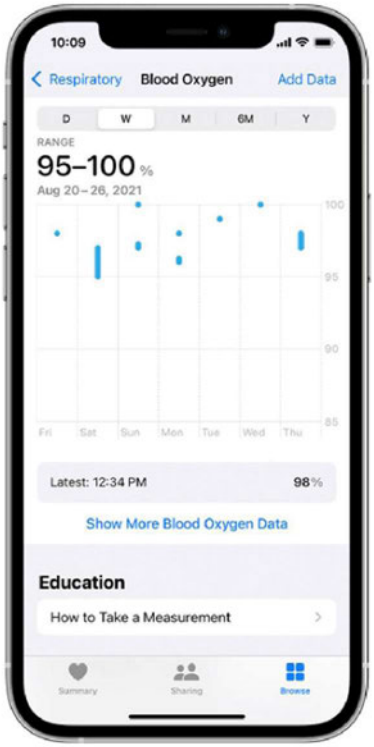

CX-0010 at 5.

d. <u>Element [27]</u>

The Watch System satisfies **[27]**. Apple does not dispute that the system satisfies **[27]**. As explained above for **[1A]**, the Accused Products contain green (525 nm), red (660 nm), and infrared (850 nm) LEDs. Tr. (Madisetti) at 740:25-741:14; CDX-0011C.087 (annotating CX-0059C); CX-0297C (Venugopal) at 53:16-54:11, 55:11-14.

When end-users use the Watch System, the system satisfies each element of Claim 27. Thus, end-users of the Watch System infringe Claim 27. As explained above, Apple had knowledge of the '745 Patent and its infringing acts through Masimo's Complaint in this Investigation, and Apple instructs end-users on how to use the Accused Products in an infringing manner. *See* Tr. (Madisetti) at 738:25-740:5, 744:19-23. Thus, Apple actively induces infringement of Claim 27.

MASIMO 2042
Apple v. Masimo
IPR2024-00241

[redacted]

D. Domestic Industry – "Technical Prong"

Masimo satisfied the DI technical prong for Claim 18 by a preponderance of the evidence. *See Alloc,* 342 F.3d at 1375.

1. Claim 18

The 745 DI Products are the following Masimo Watches: (1) [redacted] (CPX-0021C) [redacted] CPX-0014, (2) [redacted] (CPX-0029C) [redacted] CPX-0014, (3) [redacted] (CPX-0052C); (4) [redacted] (CPX-0058C); (5) [redacted] (CPX-0019C, CPX-0020C, and CPX-0065C); and (6) [redacted] (CPX-0146C, CPX-0157C). Tr. (Madisetti) at 748:10-12. Madisetti identified the following supporting evidence for each Masimo Watch:

[redacted]

Tr. (Madisetti) at 748:17-749:13. Madisetti explained how all of the 745 DI Products practice Claim 18. Sarrafzadeh disputed only two limitations, **15[B]** and **15[H]**. Tr. (Sarrafzadeh) at 1122:5-10; 1127:8-18.

MASIMO 2042
Apple v. Masimo
IPR2024-00241

[redacted]

a. Element [15PRE]

The 745 DI Products are physiological-monitoring devices that "all monitor oxygen saturation." Tr. (Madisetti) at 750:15-18; Tr. (Scruggs) at 393:12-394:3 (explaining that the 745 DI Products "all supported the ability to measure oxygen saturation and pulse rate."). As noted above for '501 Patent **[1PRE]**, Al-Ali [redacted] Al-Ali confirmed [redacted] Tr. (Al-Ali) at 274:15-275:3.

b. Element [15A]

Each 745 DI Product includes a plurality of LEDs configured to emit light proximate a wrist of a user. Tr. (Madisetti) at 750:22-751:11, 755:9-19.

[redacted]

CDX-0011C.98 (citing CX-0474C; CX-1137C; CX-1111C; CX-1124C; CX-1125C; CX-0805C). Scruggs also confirmed each device has LEDs. Tr. (Scruggs) at 393:17-394:3.

MASIMO 2042
Apple v. Masimo
IPR2024-00241

[redacted]

c. **Element [15B] - Disputed**

The 745 DI Products include the "light diffusing material" of **[15B]**. Scruggs testified about a diffusing media in each of the Masimo Watches. Tr. (Scruggs) at 401:2-5 ("[redacted]"), 401:6-13 [redacted] Scruggs demonstrated, and Madisetti personally inspected, the media [redacted] Tr. (Madisetti) at 751:22-752:2, 760:18-22 [redacted]. The images below, taken during Scruggs's demonstration of Masimo Watches to Apple's experts, illustrate the [redacted]

[redacted]

MASIMO 2042
Apple v. Masimo
IPR2024-00241

The emitter side of the 745 DI Products contacts the user's wrist when the products are worn and used to measure SpO_2. Tr. (Madisetti) at 755:9-19. Thus, the light diffusing material in each 745 DI Products is positioned between the plurality of LEDs and a tissue measurement site of the user's wrist when the products are in use. *Id.*

Sarrafzadeh disputed this limitation by alleging there is "no evidence of diffusing material in the articles." Tr. (Sarrafzadeh) at 1127:15-18. Sarrafzadeh feigned ignorance based on a lack of documents or data demonstrating diffusion and opined that "[w]atching demonstration is unscientific" and "unreliable given that the components are actually quite small." Tr. (Sarrafzadeh) at 1128:1-4. But Sarrafzadeh ignored Scruggs's testimony described above, the images showing diffuse light from the LEDs in RX-0266C, RX-0267C, RX-0268C, RX-0269C, and RX-0270C, and Madisetti's observations of diffusion. Tr. (Scruggs) at 429:4-7, 19-23; CX-1185C. Sarrafzadeh offered no alternative explanation as to

MASIMO 2042
Apple v. Masimo
IPR2024-00241

what mechanism other than diffusion could have resulted in characteristics of the light demonstrated by Scruggs and observed by Madisetti. *See Cephalon, Inc. v. Watson Pharms., Inc.*, 707 F.3d 1330, 1338 (Fed. Cir. 2013) (lack of factual support for an expert opinion going to a factual issue may render the testimony of little probative value).

d. Element [15C]

The 745 DI Products each include a light block having a circular shape. Tr. (Madisetti) at 752:3-10. Madisetti illustrated this light block for each Masimo Watch:

CDX-0011C.100 (citing CX-0656C; CX-0658C; CX-0661C; CX-1058C at 442; CX-1058C at 593; CX-0784C); Tr. (Scruggs) at 400:9-12. Visual inspection confirmed this shape.

e. Element [15D]

Apple does not dispute that each 745 DI Product satisfies **[15D].** Each product includes a plurality of photodiodes that detect light from the LEDs where the photodiodes are arranged in an array. Tr. (Madisetti) at 752:22-754:8, 760:4-9. Madisetti's demonstrative below identifies the location of the photodiodes (in blue) and the location of the light block (in yellow).

MASIMO 2042
Apple v. Masimo
IPR2024-00241

CDX-0001C.101 (excerpted) (citing CX-0474C; CX-0656C; CX-1137C; CX-1111C; CX-1124C; CX-1125C; CX-0784C).

f. <u>Element [15E]</u>

Apple does not dispute that the 745 DI Products satisfy **[15E]**. Tr. (Madisetti) at 754:11-755:6. Madisetti explained that the photodiodes "output a signal that is then received by a connected processor" to determine physiological parameters, such as oxygen saturation. *Id.*; CDX-0011C.102 (citing CX-0801C; CX-0701C at 2, 6; CX-0710C at 3, 7; CX-0705C; CX-1111C; and demonstrations by Scruggs); *see also* Tr. (Scruggs) at 393:22-394:3. Madisetti explained how [redacted] send signals to [redacted], "which then used the signal to calculate oxygen saturation." Tr. (Madisetti) at 754:24-755:3.

MASIMO 2042
Apple v. Masimo
IPR2024-00241

[redacted]

g. Element [15F]

Apple does not dispute that the 745 DI Products satisfy **[15F]**. The plurality of LEDs and photodiodes are arranged in a reflectance measurement. Tr. (Madisetti) at 755:9-25; CX-0656C; CX-1137C; CX-1111C; CX-1124C; CX-1125C; and CX-0784C.

h. Element [15G]

Apple does not dispute that the 745 DI Products satisfy **[15G]**. Each DI Product contains a light block with an opaque wall that separates the LEDs from the photodiodes that optically isolates the LEDs from the photodiodes. Tr. (Madisetti) at 756:3-13 (citing CX-0656C; CX-0658C; CX-0661C; CX-1058C; CX-1058C at 593; CX-0784C at 10); Tr. (Scruggs) at 400:9-24.

i. Element [15H] – Disputed

The 745 DI Products contain a processor that receives and processes the photodiode signals and determines a physiological parameter, including SpO_2. Tr. (Madisetti) at 756:18-757:13. For [redacted] Madisetti identified the [redacted] as meeting this limitation. Tr. (Madisetti) at 756:21-23 (citing CX-0679). For [redacted] Madisetti identified [redacted] as meeting this limitation. Tr. (Madisetti) at 756:24-757:13 (citing CX-0701C; CX-0710C; CX-1074C; CX-0705C; CX-1068C; CX-1069C; CX-1072C; CX-0801C at 2; CX-0790C). Scruggs also confirmed that each watch "supported the ability to measure oxygen saturation and pulse rate." Tr. (Scruggs) at 393:12-394:3. Madisetti further explained that his use of the W1, the demonstrations by Scruggs, the documents he reviewed, the source code he reviewed, the deposition testimony, and the testimony at the hearing, all confirm that the Masimo Watches calculate oxygen saturation. Tr. (Madisetti) at 756:18-757:1.

MASIMO 2042
Apple v. Masimo
IPR2024-00241

Sarrafzadeh disputed that the 745 DI Products practice this limitation. He argued that "it's not clear that the processor is actually doing a calculation of physiological parameter of a user." Tr. (Sarrafzadeh) at 1127:9-13. But Sarrafzadeh personally observed demonstrations of the Masimo Watches by Scruggs, and he understood Scruggs was demonstrating "[t]he SpO2 measurement feature and the heart rate measurement feature." Tr. (Sarrafzadeh) at 1123:20-23, 1124:5-23. Sarrafzadeh, however, described the measurements as "flawed at best" and "inconsistent" because CPX-0029C reported an SpO_2 measurement of [redacted] for Scruggs. Tr. (Sarrafzadeh) at 1124:14-23. Sarrafzadeh testified as if he was concerned that [redacted] Tr. (Sarrafzadeh) at 1124:12-23. But Sarrafzadeh knew the number indicated no such thing. The [redacted] displayed [redacted] RX-0263C at 0:46-0:60; Tr. (Scruggs) at 473:21-474:1 [redacted]

For the W1 Watch, Sarrafzadeh testified that its SpO_2 measurement differed from a Masimo MightySat SpO_2 measurement by [redacted]. Tr. (Sarrafzadeh) at 1126:12-20. But this [redacted] difference fails to show that the W1 does not measure SpO_2. Moreover, Warren compared the same readings and determined that the average difference was only [redacted]. RX-1470C.0008 at 8. Finally, in arguing evidentiary objections, Apple's counsel represented to the ALJ that "there's no claim with respect to the accuracy" of the Masimo Watch. Tr. (Apple Counsel) at 295:9-14.

Sarrafzadeh also ignored the documented clinical studies performed at Masimo, and the testimony about them. Al-Ali explained that Masimo [redacted]

MASIMO 2042
Apple v. Masimo
IPR2024-00241

[redacted]

[redacted] as explained above for 501 Element **[1PRE]**.

j. <u>Element [15I]</u>

Apple does not dispute that the 745 DI Products satisfy **[15I]**. Tr. (Madisetti) at 757:14-758:17. Each of the 745 DI Products transmit physiological parameter data, namely, SpO_2 data, to a separate processor. Tr. (Madisetti) at 758:9-11 (citing CX-0679) (relying upon [redacted]), 756:24-757:3 (citing CX-0701C showing processor [redacted]), 757:20-23 (citing CX-0836C showing screenshots of SpO2 measurements from Scruggs's demonstrations for [redacted]), 756:25-757:3 (citing CX-0710C and CX-1074C showing [redacted] processors for [redacted]), 757:24-25 (describing [redacted]'s transmission of SpO2 data from [redacted] to [redacted]), 757:4-9 (identifying [redacted] and [redacted] processors for [redacted]); 758:1-4 (citing CX-0836C and CX-0709C) (explaining how SpO_2 data is sent to phone CPX-0141C and how oxygen-saturation data from one processor to another); 758:12-17 (citing CX-0685C for W1, which "confirms that the Masimo Watch measures and displays oxygen saturation" and "[t]he watch automatically sends your data to the Masimo SafetyNet app on the phone"). Scruggs also confirmed [redacted] as one of [redacted] on [redacted] Tr. (Scruggs) at 410:7-14.

k. <u>Masimo Established The DI Products Satisfy Element [18]</u>

The 745 DI Products satisfy **[18]**. As discussed above with respect to **[15PRE]** and **[15H]**, for example, the 745 DI Products measure blood oxygen saturation.

MASIMO 2042
Apple v. Masimo
IPR2024-00241

[redacted]

E. Validity

1. Anticipation/Obviousness

Apple failed to show by clear and convincing evidence that any Asserted '745 Patent Claim is invalid.

a. Ground 1: Apple Has Not Established that the Series 0 Renders Obvious Claims 9 and 27 or Anticipates Claim 27

i. Apple Has Not Established that The Series 0 is Prior Art to the '745 Patent

Apple presented no clear and convincing evidence that it sold the Series 0 before the July 2015 priority date of the '745 Patent. Nor did Apple prove the structure and function of the Series 0 as of the priority date. Instead, Apple relied upon uncorroborated testimony, unapproved documents from 2013 and 2016 that do not match the Series 0, and evidence of watches other than Series 0 from well after the supposed release of the Series 0. While Apple introduced a Series 0 physical, RPX-005, it did not provide any evidence to establish that the physical was available before the priority date. Apple did not present any of its own internal documents from the relevant time frame, leaving an evidentiary void for reasons explained below.

Apple's counsel claimed that "[t]he Series 0 watch was released to great public fanfare in 2015. The Apple witnesses will testify to exactly that. This is not a fact that can be reasonably contested." Tr. (Apple Opening) at 56:21-24. Despite this guarantee, Apple presented a text-only press release (RX-0023) devoid of any description or images of the Series 0 Watch that fails to establish the Series 0 was on-sale before July 2015. It describes an anticipated *future* event.

Apple also relied on uncorroborated witness testimony. While several Apple witnesses testified that the Series 0 was shipped in April 2015 or the Spring of 2015, none provided ***any***

MASIMO 2042
Apple v. Masimo
IPR2024-00241

evidence to corroborate their testimony. *See* Tr. (Venugopal) at 818:10-15; Tr. (Land) at 956:23-957:1; Tr. (Block) at 910:22-24. Apple certainly had documents of the first sale of its Apple Watch that "was released to great public fanfare," yet it presented no such evidence. *See Finnigan Corp. v. Int'l Trade Comm'n*, 180 F.3d 1354, 1369 (Fed. Cir. 1999) ("[C]orroboration is required of any witness whose testimony alone is asserted to invalidate a patent, regardless of his or her level of interest.").

ii. <u>Apple Has Not Established The Structure and Function of The Series 0</u>

Apple has no clear and convincing evidence of the structure and function of any Series 0 Watch (which Apple alleges was sold before July 2, 2015). For example, where are the final drawings and specifications describing its structure and function? Instead, Apple presented unsupported fact testimony and Google images of a ***Series 1*** watch. Apple also presented various documents, none of which showed the design of any Series 0 Watch sold before July 2, 2015. Apple's expert Sarrafzadeh did not review a physical of the Series 0 (Order 44 at 3), a teardown of the Series 0, or any documents reflecting the final design of the Series 0. Apple presented a Series 0 physical, but did not tie it to any particular document or establish when it was made or sold. Tr. (Block) at 897:24-898:11, 899:21-900:9-13.

The structure of the Series 0 allegedly available before July 2015 remains a mystery. Apple presented at least four different images of the "Series 0" during the hearing. First, Apple's counsel showed the following in Apple's opening:

MASIMO 2042
Apple v. Masimo
IPR2024-00241

[redacted]

RDX-0001.5. Apple never introduced this image into evidence. Next, he showed two different alleged Series 0 watches:

RDX-0001.7. Apple did not introduce either of these two images into evidence, and they show two different watches. As apparent from the images themselves, the image on the left has metal

[redacted]

rings around each opening, but the image on the right lacks this feature. Moreover, the image on the left indicates a "CERAMIC BACK" in the wording around the watch back crystal, while the image on the right indicates a "COMPOSITE BACK." Sarrafzadeh never discussed any of the three images at the hearing. Instead, he testified that a fourth image he found on Google was a Series 0:

RDX-0007.89C; Tr. (Sarrafzadeh) at 1130:6-1131:9. But cross-examination exposed the truth. Sarrafzadeh admitted this image was actually a Series 1. Tr. (Sarrafzadeh) at 1131:14-18. Just

MASIMO 2042
Apple v. Masimo
IPR2024-00241

like his shape analysis for non-infringement, Sarrafzadeh apparently sees circles where no one else can.

Apple presented multiple, inconsistent images of different watches (without introducing any of them into evidence), rather than presenting any documentation. Apple cannot satisfy its burden.

Instead, Sarrafzadeh stated that he "looked at various documents available" and "talked to and heard a number of Apple engineers …." Tr. (Sarrafzadeh) at 1090:24-1091:3. But the only engineer Sarrafzadeh identified in his testimony was Venugopal. Tr. (Sarrafzadeh) at 1091:4-5. Neither Venugopal nor Sarrafzadeh testified as to the factual bases, if any, that were provided to Sarrafzadeh.

The documents Apple relies upon are insufficient to establish the structure and features of the Series 0 as of July 2015. First, RX-0396C ([redacted]) is watermarked as "PRE-RELEASE" and dated July 2013, two years before the alleged release of Series 0. *See, e.g.*, RX-0396C.001, RX-0396C.077; Tr. (Land) at 962:15-19 (noting completion of hardware in 2014). Land testified that the "isolation" portion of Figure 6 of RX-0396C "is a representation of--it's a schematic for some of the major elements in the Apple Watch." Tr. (Land) at 961:7-962:13. But Land failed to note the differences between the schematic in Figures 6 and 7 of RX-0396C and Apple's testimony regarding the Series 0. Figures 6 and 7 of RX-0396C show only three collinear apertures (identified as "emitter and detector apertures" in Fig. 7), while Apple's witnesses described the Series 0 images as having four apertures in a North-South-East-West configuration. Tr. (Venugopal) at 820:16-24. In addition, Figure 6 (below) illustrates a flat back rather than a convex or domed back, yet Apple's witnesses testified that the Series 0 allegedly had a domed surface. Tr. (Block) at 898:3-11 (testifying regarding RPX-005).

MASIMO 2042
Apple v. Masimo
IPR2024-00241

[redacted]

RX-0396C.0017 (highlighting in original).

[redacted]

RX-0396C.0018. *See also* Tr. (Madisetti) at 1356:10-22 (describing the discrepancies between Sarrafzadeh's explanation of the Series 0 and RX-0396C); Tr. (Madisetti) at 1357:11-20 (explaining RX-0396C is unreliable and does not disclose the claimed light block). Because of the differences between this exhibit and Apple's testimony regarding Series 0, Sarrafzadeh's reliance on RX-0396C to somehow show the Series 0 is misplaced.

MASIMO 2042
Apple v. Masimo
IPR2024-00241

[redacted]

Sarrafzadeh also relied upon RX-0392C ([redacted] *See, e.g.*, RDX-0007.85-86C; RDX-0007.88, RDX-0007.95 (citing RX-0392C). But RX-0392C is an unapproved document from April 11, 2016, after the priority date for the '745 Patent.

Sarrafzadeh's reliance on RX-0392C and RX-0396C is misplaced and fails to sufficiently corroborate the structure and function of the Series 0 before the priority date. One would expect that Apple has documents from the first half of 2014 that consistently describe the Series 0. But, interestingly, this is precisely when Apple employed Cercacor's former CTO Lamego to work on the physiological monitoring of the Apple Watch. *See* CX-1683; Tr. (Kiani) at 187:16. Apple chose not to introduce any such documents. Apple's decision was tactical.[13]

iii. <u>The Series 0 Does Not Render Obvious Claims 9 and 27 or Anticipate Claim 27</u>

Sarrafzadeh opined that Series 0 rendered Claim 9 obvious. Tr. (Sarrafzadeh) at 1094:10-17. But, it was unclear if Sarrafzadeh was also opining that Series 0 anticipated Claim 27 or rendered it obvious. Tr. (Sarrafzadeh) at 1094:18-1096:10. Even if Apple could establish the Series 0 as prior art, Apple failed to show by clear and convincing evidence that Claims 9 and 27 would have been obvious in view of the Series 0 or that the Series 0 anticipated Claim 27.

First, Apple's engineers confirmed that the Series 0 did not measure oxygen saturation as required by **[9]**. *See* Tr. (Venugopal) at 834:12-14; Tr. (Mannheimer) at 1013:11-13. Apple thus fails to show that Series 0 meet this limitation.

---

[13] The overlap of the Series 0 design work and Lamego's time at Apple may explain why Apple presented no Series 0 document from this time period. Apple developed the Series 0 by the summer of 2014. Tr. (Land) at 962:15-19. Lamego was working on physiological monitoring for the Apple Watch at that time. *See,* CX-1683; Tr. (Venugopal) at 843:14-19. Apple apparently did not want to link Lamego to the Series 0 Watch. So instead, Apple chose to rely on uncorroborated testimony, Google images of a "Series 1," an outdated July 2013 document before Lamego's arrival at Apple, and a non-prior-art 2016 document dated after Lamego's departure. *See* Tr. (Kiani) at 187:16, Tr. (Venugopal) at 817:9-14, 843:14-19.

MASIMO 2042
Apple v. Masimo
IPR2024-00241

Instead, Sarrafzadeh testified that it would have been obvious to modify the Series 0 to measure oxygen saturation:

> Q. Slide 7-92. Does Apple Watch Series 0 render obvious claim 9 of the '745 patent is this [sic]?
> A. Certainly. If you look at RX-396C, we see in Apple section 231 it talks about a pulse rate, and, as discussed earlier, the notion of the pulse oximeters have been commercial available, shown in RX-35 by Webster for many years, as far back as '70s, in fact.

Tr. (Sarrafzadeh) at 1094:10-17; *see also* RDX-0007.92C (citing Webster, RX-0035 at 30 and RX-0396C at 0011). But Sarrafzadeh identified no modification to the Series 0 or any combination with Webster that would result in the Series 0 measuring oxygen saturation. Sarrafzadeh relies on Webster only for background that "pulse oximeters have been commercially available for a little more than the last decade." RDX-0007.92C (citing Webster, RX-0035 at 30). But that background knowledge does not explain *how* a POSITA would modify the Series 0 to measure SpO_2 at the wrist. *See, e.g.*, *Personal Web*, 848 F.3d at 994 ("[A] clear, evidence-supported account of the contemplated workings of the combination is a prerequisite to adequately explaining and supporting a conclusion that a relevant skilled artisan would have been motivated to make the combination and reasonably expect success in doing so.").

Sarrafzadeh also ignored testimony from Apple's engineers that they did not think it was possible to measure oxygen saturation at the wrist and that they would have to invent new techniques to solve the difficult task of measuring pulse oximetry at the wrist. Tr. (Sarrafzadeh) at 1095:12-16. That testimony is discussed above with respect to objective indicia for the Multi-Detector Patents. Thus, even after the '745 Patent priority date, Apple's engineers were still determining whether SpO_2 at the wrist was feasible.

As explained in further detail below regarding objective indicia of nonobviousness, other Apple engineers, including Waydo and Dr. Tao Shui, also expressed skepticism and noted the

MASIMO 2042
Apple v. Masimo
IPR2024-00241

difficulty of measuring oxygen saturation at the wrist. *See, e.g.,* CX-0299C (Waydo) at 166:4-167:5; CX-0295C (Shui) at 108:15-21; *see* Section IV.E.1.c, *infra*.

Sarrafzadeh failed to explain how a POSITA, who would have had just a bachelor's degree and a couple years of relevant experience, or a master's degree and less than one year of experience, would have a reasonable expectation of success. Multiple Ph.D.-level Apple engineers who worked on the Apple Watch, including Mannheimer with decades of experience in designing pulse oximeters, did not know if it could be done. Sarrafzadeh's conclusory opinion is not credible in light of the substantial evidence detailing how Apple's very experienced team took years after the Series 0, including two generations of back crystal designs, to develop its blood-oxygen feature. Tr. (Sarrafzadeh) at 1110:11-14.

Second, Apple has not demonstrated that the Series 0 discloses or renders obvious the "material configured to change the first shape into a second shape" of **[1B]** and **[20B]**. Apple relies on a 2016 drawing from RX-0392C of a Fresnel lens, but provides no evidence that this lens changes light from a first shape to a second shape. Instead, Sarrafzadeh prepared the demonstrative below and testified that: "Fresnel lens has these grooves as highlighted here, and these grooves take the shape of the LED and transform that into a crescent type of a shape." Tr. (Sarrafzadeh) at 1093:3-8.

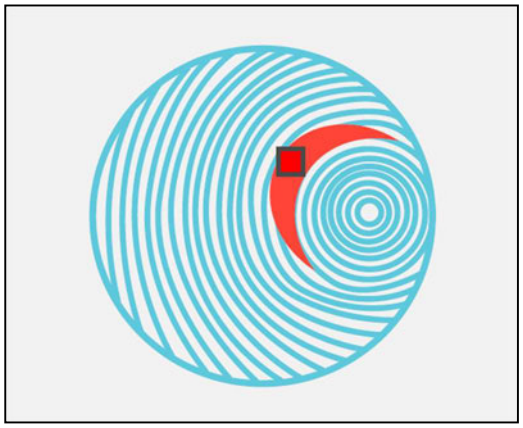

MASIMO 2042
Apple v. Masimo
IPR2024-00241

RDX-0007.87C. Sarrafzadeh provided nothing to support his opinion that the Fresnel lens changes the infrared light into a "crescent shape." *See Ashland Oil, Inc. v. Delta Resins & Refractories, Inc.*, 776 F.2d 281, 294 (Fed. Cir. 1985) (lack of factual support for expert opinion "may render the testimony of little probative value in a validity determination").

Venugopal—a fact witness—also testified that the infrared light has a crescent shape after passing through the Fresnel lens, but provided no testing or any other evidence to corroborate this self-serving testimony. Tr. (Venugopal) at 823:4-9. Witness testimony alone "is insufficient as a matter of law to establish invalidity." *Finnigan*, 180 F.3d at 1370; *Juicy Whip Inc. v. Orange Bang, Inc.*, 292 F.3d 728, 740-43 (Fed. Cir. 2002) (uncorroborated testimony of six witnesses, including an employee of the patent challenger, failed to provide clear and convincing evidence necessary to invalidate a patent).

Apple's own patents also contradict its statements about the Fresnel lens. An Apple patent application describes the purpose of the Fresnel lens as ***retaining*** the shape of the emitted light, which is exactly the opposite of what Apple's interested witnesses now claim. Venugopal, Block and Mannheimer (among others) are named inventors of U.S. Patent Application Publication No. 2017/0325744 entitled "Systems and Methods for Increasing Localized Pressure to Improve PPG Motion Performance." CX-1806. That application discloses the use of raised convex protrusions in combination with Fresnel lens(es), which is very similar to what Apple claims was the design of the Series 0. *Id*. at Abstract. The application specifically explains that "it may be desirable for light emitted by the light emitter to ***retain its*** optical power, collection efficiency, ***beam shape***, and collection area…. Examples of the disclosure can include the Fresnel lens(es) located in the protrusion." *Id*. ¶[0053]; *id.* at Claims 13-14, 20. Thus, Venugopal's own patent publication discloses that a Fresnel lens is provided to retain, not

MASIMO 2042
Apple v. Masimo
IPR2024-00241

change, the beam shape of the light emitted by the light emitter. *Id.* This disclosure contradicts his uncorroborated opinion about the Fresnel lens' impact on the light.

Third, Apple has not demonstrated that the Series 0 included "a surface comprising a dark-colored coating" of **[1D]** and **[20D]**. Without any supporting evidence, Sarrafzadeh claimed that "RDX-789C shows the black zirconia in the back, and that is, indeed, the dark-colored coating that's discussed in this limitation. So the first layer of the black zirconia is that dark-colored coating. Furthermore, one of ordinary skill knows that you can easily and low-tech add dark-colored coating to it." Tr. (Sarrafzadeh) at 1093:14-21; 1131:19-1132:4; *see also* RDX-0007.89C. Sarrafzadeh's conclusory analysis does not establish that the back of the Series 0 exists in layers, or that there is a coating. He points to nothing to support this assertion. And as mentioned above, the alleged images of Series 0 that Apple presented in its opening demonstratives referenced both "ceramic" and "composite" backs and showed a version with metallic rings surrounding the openings and another version without those rings. *See* RDX-0001.7 (incorrectly citing RX-0043 and RPX-0005). No Apple fact or expert witness has addressed that discrepancy between the "ceramic" and "composite" back materials.

Sarrafzadeh's testimony that "one of ordinary skill knows that you can easily and low-tech add dark-colored coating to it" also fails to demonstrate obviousness. Tr. (Sarrafzadeh) at 1093:14-21. He identifies no evidence of any coating that would allegedly be combined with the Series 0 back or any motivation to combine. Merely stating that it "can" be done is not sufficient. *Belden Inc. v. Berk-Tek LLC*, 805 F.3d 1064, 1073 (Fed. Cir. 2015) ("[O]bviousness concerns whether a skilled artisan not only *could have made* but *would have been motivated to make* the combinations or modifications of prior art to arrive at the claimed invention."). And as

MASIMO 2042
Apple v. Masimo
IPR2024-00241

Madisetti explained, there is "no motivation to add a dark-colored coating given that it is already black zirconia." Tr. (Madisetti) at 1355:22-25; *see also* RX-0392C at 10.

Fourth, Apple has not demonstrated that Series 0 discloses the light block of **[1E]** because Apple relies upon RX-0396C for this limitation, which as described above, does not establish the structure of Series 0. *See* Tr. (Sarrafzadeh) at 1093:22-1094:3; RDX-7.90C (citing RX-0396C); Tr. (Land) at 961:7-962:13; Tr. (Madisetti) at 1356:16-22.

Fifth, as described above with respect to **[1B]**, **[1D]**, and **[1E]**, Apple cannot show that similar limitations of **[20B]**, **[20D]**, and **[20E]** are disclosed by Series 0. Tr. (Sarrafzadeh) 1094:18-1095:2; Tr. (Madisetti) at 1355:10-1359:4.

Sixth, Apple and Sarrafzadeh presented no evidence that an iPhone,[14] when paired with an alleged Series 0, satisfies **[20G]**. **[20G]** requires, in part, "wherein the user interface includes a touch-screen display configured to present visual feedback responsive to the physiological parameter data." However, Sarrafzadeh merely testified, "We see that there are touchscreen displays on this cell phone, as required by the claim, and because of the connection to the watch, the app can provide a visual feedback to show the physiological parameters." Tr. (Sarrafzadeh) at 1096:2-5. Sarrafzadeh identified no evidence of any "app" that can provide visual feedback to show the physiological parameters as of the '745 Patent priority date. *Id.* Indeed, even his demonstrative merely showed a stock image of an iPhone home screen, not an app that shows visual feedback responsive to the physiological parameter data captured on an alleged Series 0.

[14] No iPhone was identified or submitted as evidence for this invalidity argument. *See* Tr. (Sarrafzadeh) at 1095:17-1096:5.

MASIMO 2042
Apple v. Masimo
IPR2024-00241

[redacted]

RDX-0007.94C (citing nothing).

Thus, Apple has not demonstrated that the Series 0 renders Claims 9 and 27 obvious or that it anticipates Claim 27. *See also* Tr. (Madisetti) at 1355:10-1359:4.

b. <u>Grounds 2 and 3: Claims 9, 18, and 27 Are Not Rendered Obvious by Iwamiya Alone or in Combination with Sarantos (and Venkatraman for Claims 18 and 27)</u>

Sarrafzadeh presented obviousness arguments based on a combination of Iwamiya and Sarantos (Claim 9) and Iwamiya, Sarantos, and Venkatraman (Claims 18 and 27). *See* Tr. (Sarrafzadeh) at 1098:5-1109:17 (discussion of Iwamiya-based grounds). Masimo addresses these two combinations together because the analysis of Iwamiya and Sarantos applies to Claims 18 and 27, where Sarrafzadeh added Venkatraman only to address **[15I]** and **[20G]**. Sarrafzadeh's reliance on Venkatraman for **[15I]** and **[20G]** does not remedy the deficiencies identified below for several elements of Claims 18 and 27 where Sarrafzadeh relies only on

MASIMO 2042
Apple v. Masimo
IPR2024-00241

Iwamiya and Sarantos. *See* Tr. (Sarrafzadeh) at 1098:5-1109:17; RDX-0007.96C (identifying prior art grounds); Tr. (Madisetti) at 1362:24-1363:10.

Apple fails to demonstrate by clear and convincing evidence that Claims 9, 18, and 27 would have been obvious. Iwamiya, alone or in combination with Sarantos, fails to disclose several claim elements in Claims 9, 18, and 27 and fails to render the claims obvious. Tr. (Madisetti) at 1359:8-1365:6. Additionally, the PTO already considered the published application for Iwamiya, US 2011/0004106A1, during prosecution of the '745 Patent. *See* JX-0009 at 8; RX-0130 at 1 (identifying US 2011/0004106A1 as a prior publication); JX-0010 at 339 (IDS listing US 2011/0004106A1 to Iwamiya). Thus, Apple has the added burden of overcoming the deference due to the PTO when relying on Iwamiya as a primary reference. *Shire*, 802 F.3d at 1307. Apple's addition of Venkatraman for Claims 18 and 27 fails to remedy the deficiencies in Apple's combination.

i. <u>No measurement of "oxygen saturation"</u>

Claims 9 and 18 both require that "the physiological parameter comprises oxygen saturation." Claims 9 and 18 also require that this oxygen-saturation measurement be taken at the wrist. *See* **[1B]** and **[15B]**. However, neither Iwamiya nor Sarantos discloses measuring oxygen saturation at the wrist, nor would a POSITA have been motivated to combine them with a reasonable expectation of success. Tr. (Madisetti) at 1359:23-1361:1.

First, Iwamiya discloses an "optical biological information detecting apparatus" in the form of a wristwatch, "which emits observation light of a specific wavelength band." RX-0130 at Abstract, 5:54-56. The only "biological information" disclosed in Iwamiya is a "pulse wave" for heart rate. *Id.* at 9:3-5. Determining heart rate is a different and much simpler task than the complex measurement of oxygen saturation. *See, e.g.,* Tr. (Waydo) at 937:9-938:24 (confirming

MASIMO 2042
Apple v. Masimo
IPR2024-00241

that oxygen saturation and heart rate are "different for sure" and that "oxygen saturation is a more difficult measurement than heart rate measurement"); CX-0074C at 15 (measuring oxygen saturation "is a significantly different requirement than measuring pulse rate alone.") (emphasis in original), 15-16 (identifying differences between pulse rate and oxygen saturation).

Sarrafzadeh relied on Iwamiya's "display unit 23 that displays a measurement result of biological information, such as a pulse wave." RDX-0007.106C (quoting RX-0130 at 9:1-7); Tr. (Sarrafzadeh) at 1100:2-8; 1106:13-17. According to Sarrafzadeh, "Oxygen saturation is a biological information." Tr. (Sarrafzadeh) at 1106:13-17. Sarrafzadeh provided no further analysis or explanation for his opinion that Iwamiya discloses measurement of oxygen saturation.

As Madisetti explained, Iwamiya does not disclose measurement of oxygen saturation. Tr. (Madisetti) at 1359:23-1360:7; RX-0130. Iwamiya disclosed only "pulse wave," which is different and much simpler than oxygen saturation. RX-0130 at 9:1-7; *see also* Tr. (Madisetti) at 1360:2-4 (explaining that Sarrafzadeh "conflated heart rate measurement with pulse oximetry."); Tr. (Waydo) at 937:6-938:24. No evidence suggests that pulse wave sensors are appropriate as pulse oximeters.

Moreover, as Madisetti observed, Iwamiya discloses the use of only a single wavelength of light at 940 nm, which is infrared. Tr. (Madisetti) at 1360:2-11; *see also* RX-0130 at 10:34-38, 11:19-23. Iwamiya chose 940 nm to avoid a problem where light under 600 nm would be absorbed by melanin in skin, resulting in weak signals and the inability to accurately measure pulse waves. Tr. (Madisetti) at 1360:8-11; RX-0130 at 1:62-2:6, 21:38-22:12. Sarrafzadeh did not explain how it would be possible to measure oxygen saturation with only a single 940 wavelength of light, when pulse oximetry involves ***two*** wavelengths of light. *See* Tr. (Madisetti)

MASIMO 2042
Apple v. Masimo
IPR2024-00241

[redacted]

at 1360:20-1361:1 (explaining that for claims 9 and 18 "which require … wherein the physiological parameter comprises oxygen saturation, there has to be a first and a second wavelength."); *see also* RX-0035 at 30, 52 ("The two wavelengths chosen for pulse oximetry are 660 nm and 940 nm."); Tr. (Kiani) at 80:14-19; Tr. (Mannheimer) at 1002:1-6.

Nor did Sarrafzadeh explain how or why a POSITA would modify Iwamiya to measure oxygen saturation. *See Personal Web Techs.*, 848 F.3d at 994 (remanding obviousness finding for failure to explain "*how* the combination of the two references was supposed to work"). There would be no reason to modify Iwamiya to emit red light for pulse oximetry because it has an optical filter 17 that blocks light below 900 nm, which would include red light. RX-0130 at 8:42-47, 18:55-60, FIGS. 3-4. Sarrafzadeh never addressed the optical filter 17:

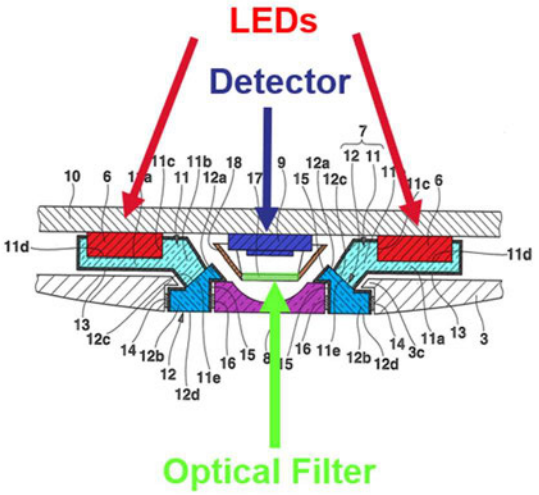

Id. at FIG. 3 (annotated). "If when combined, the references would produce a seemingly inoperative device, then they teach away from their combination." *Tec Air, Inc. v. Denso Mfg. Michigan Inc.*, 192 F.3d 1353, 1360 (Fed. Cir. 1999) (internal quotations and citations omitted).

Second, Sarrafzadeh suggested modifying Iwamiya with Sarantos because Sarantos mentions the use of multiple wavelengths of light to measure blood oxygenation levels. Tr. (Sarrafzadeh) at 1100:10-14, 1106:18-23; RDX-0007.107C (quoting RX-0366 at 13:44-47). But

MASIMO 2042
Apple v. Masimo
IPR2024-00241

Sarrafzadeh fails to consider Sarantos as a whole or that the combination would remain inoperative due to Iwamiya's filter. Sarantos discloses improvements to a wrist-worn heart-rate sensor by using "high-aspect-ratio" photodetectors. *See* RX-0366 at Abstract, FIG. 2. But Sarantos does not disclose how to implement oxygen-saturation measurements into his device. Rather, as Madisetti explained, "Sarantos focuses on green light" and "Sarantos specifically discloses … that it's not tailored for the use in other spectrums, such as red or infrared spectra." Tr. (Madisetti) at 1360:12-19; RX-0366 at 18:48-51.

Even if Sarantos had disclosed a device for measuring oxygen saturation, Sarrafzadeh failed to explain how or why a POSITA would have been motivated to combine Iwamiya with Sarantos or have had a reasonable expectation of success. Sarrafzadeh offered only generic platitudes in support of his alleged motivation to combine. For example, he argued that Iwamiya and Sarantos "are both physiological monitoring devices … and they are in the same area '745 patent. Furthermore, they are actually both wrist-worn devices." Tr. (Sarrafzadeh) at 1100:15-20; *see also id.* at 1106:24-1107:11. But that statement merely demonstrates that Iwamiya and Sarantos are in the same field, not that there is any motivation to combine them for oxygen saturation. *Certain Chem. Mech. Planarization Slurries*, 337-TA-1204, Initial Determination at 188-189 (July 8, 2021) (finding that allegation that references were directed to the same art or techniques does not provide a sufficient motivation to combine) (citation omitted), *aff'd by* Inv. No. 337-TA-1204, Comm'n Op. (Jan. 6, 2022). "Such short-cut logic would lead to the conclusion that any and all combinations of elements known in this broad field would automatically be obvious, without the need for any further analysis." *Id.* at 189 (quotation omitted).

MASIMO 2042
Apple v. Masimo
IPR2024-00241

Sarrafzadeh also stated that "Sarantos adds the fact that a PPG, such as blood oxygenation level can be added, and that would enhance, by way of example, what the biological information of Iwamiya is." Tr. (Sarrafzadeh) at 1101:12-19; *see also id.* at 1107:3-11. But that generic concept of "enhancing" Iwamiya ignores the numerous reasons why a POSITA would not combine Iwamiya and Sarantos. Madisetti explained that a POSITA would not have been motivated to combine Iwamiya with Sarantos because Sarantos focuses on green light "in the range of 500 nm to 550 nm" (RX-0366 at 18:35-41), while Iwamiya taught away from the use of light under 600 nm due to signal strength issues. RX-0130 at 1:62-2:6, 21:38-22:12; Tr. (Madisetti) at 1360:2-1361:1. Madisetti also explained that Sarantos taught away from blood-oxygen measurements because Sarantos explicitly states that it is "not tailored for use in other spectrums, such as the red or infrared spectra." RX-0366 at 18:44-51; Tr. (Madisetti) at 1360:12-19. Madisetti's opinions stand unrebutted. Thus, a POSITA would not have looked to these pulse wave detectors, that filter out and are directed to different wavelengths, for a pulse oximeter.

Sarrafzadeh also failed to demonstrate a reasonable expectation of success in combining Iwamiya with Sarantos to achieve measuring oxygen saturation at the wrist. Sarrafzadeh provided only the following:

> Q. Would a POSITA have reasonably expected success in combining Sarantos' teaching of making a blood oxygen measurement with the Iwamiya sensor at the time of the application for the '745?
> A. Yes. As described in Sarantos and as we saw in the literature way before that, one would have success of combining Sarantos with Iwamiya.

Tr. (Sarrafzadeh) at 1101:20-1102:1; *see also id.* at 1107:12-16. That conclusory statement fails to explain why a POSITA would have any expectation of success in combining Sarantos—which expressly states it is not tailored for red and infrared light—with Iwamiya—which discloses the

MASIMO 2042
Apple v. Masimo
IPR2024-00241

use of a single wavelength (940nm) and expressly discloses filtering out red light—to arrive at a working pulse oximeter at the wrist.

Sarrafzadeh ignored the extensive contrary evidence and testimony from Apple's witnesses. As explained above with respect to Sarrafzadeh's Series 0 arguments, a POSITA would not have had a reasonable expectation of success in achieving pulse oximetry at the wrist. *See* Sections IV.E.1.a.iii, IV.E.1.c. Rather, as candidly admitted by Mannheimer, even a very skilled engineer's reaction would have been an eye roll and "good luck with that." Tr. (Mannheimer) at 1012:12-16.

ii. <u>No "second wavelength"</u>

Claim 27 requires "a second wavelength." Iwamiya discloses the use of only a single wavelength of light—940 nm. Tr. (Madisetti) at 1359:22-1366:1; RX-0130 at 10:34-38. Sarrafzadeh relied on Sarantos to add another wavelength. Tr. (Sarrafzadeh) at 1108:25-1109:6. These arguments fail for the reasons discussed above.

Sarrafzadeh further argued a reasonable expectation of success because "adding these multiple wavelengths in a biological monitoring device was known, as Webster said, for many years." Tr. (Sarrafzadeh) at 1109:13-17. Sarrafzadeh's reliance on Webster does not overcome the numerous issues with Iwamiya and Sarantos discussed above and ignores the inoperability posed by Iwamiya's optical filter.

iii. <u>No "surface comprising a dark-colored coating"</u>

Claims 9 and 27 both require "a surface comprising a dark-colored coating" as recited in **[1D]** and **[20D]**, respectively. Iwamiya fails to disclose or render obvious this element, alone or in combination with Sarantos. Tr. (Madisetti) at 1361:2-1362:5. Apple relies on Iwamiya's disclosure of a "light shielding frame 18" in Figure 4. *See* RDX-0007.103C (quoting RX-0130

MASIMO 2042
Apple v. Masimo
IPR2024-00241

at FIG. 4, 8:38-42). But Iwamiya does not disclose that "light shielding frame 18" comprises a dark-colored coating. *See generally* RX-0130. Instead, Sarrafzadeh testified that "Iwamiya talks about light shielding, that shields the light. One option for that is, indeed, a dark-colored coating." Tr. (Sarrafzadeh) at 1099:11-12.

However, as Madisetti explained, a POSITA would not have been motivated to use a dark-colored coating on the light shielding frame 18 because "it's a structure that already blocks light, so there's no reason to have a dark-colored coating." Tr. (Madisetti) at 1361:9-12. Iwamiya also explained throughout the specification that "light shielding" refers to reflective metals. For example, in discussing the embodiment in Figures 13 and 14, Iwamiya explained:

> [T]he holder portion 43 of the light receiving unit 33 is formed of a metal with a light shielding property, such as aluminum, and its surface is subjected to alumite treatment to have a reflection function. Thereby, the light receiving element 33a can be optically protected.

RX-0130 at 18:61-65; *see also id.* at 28:64-29:1, 39:20-24. Thus, a POSITA would understand "light shielding frame 18" to also be reflective and that Iwamiya teaches away from using a dark-colored coating that does not reflect light. Tr. (Madisetti) at 1361:12-18.

Sarrafzadeh also claimed there is a dark-colored coating in Sarantos (specifically, the in-mold label 2276 shown in Sarantos Fig. 22) and argued that "the shielding that Iwamiya talks about ***can be*** enhanced with the dark-colored coating of Sarantos." *See* Tr. (Sarrafzadeh) at 1099:8-15, 1100:22-1101:10; RDX-0007.103C (citing RX-0366 at Fig. 22, 17:6-16). But this does not show what a POSITA ***would*** do. *Belden*, 805 F.3d at 1073. Moreover, Sarrafzadeh never explained how the "dark-colored coating of Sarantos" could enhance Iwamiya. Tr. (Sarrafzadeh) at 1100:22-1101:10. As Madisetti explained, a POSITA would not have been motivated to combine Iwamiya with Sarantos' in-mold label or mask because (1) the light shielding frame 18 already blocks light and (2) Iwamiya taught the use of reflective materials for

MASIMO 2042
Apple v. Masimo
IPR2024-00241

[redacted]

"light shielding" that would discourage or teach away from the use of a dark-colored coating on the light shielding frame 18. Tr. (Madisetti) at 1361:19-1362:5; *see also Kinetic Concepts, Inc. v. Smith & Nephew, Inc.*, 688 F.3d 1342, 1369 (Fed. Cir. 2012) ("Because each device independently operates effectively, a person having ordinary skill in the art … would have no reason to combine the features of both devices into a single device.").

Sarrafzadeh also relied on Webster for an alleged motivation to combine Iwamiya with Sarantos. *See* Tr. (Sarrafzadeh) at 1100:22-1101:4; RDX-0007.109C (quoting Webster (RX-0035) at 0202). However, Sarrafzadeh did not explain how Webster overcomes the numerous issues with Iwamiya and Sarantos. RX-0130 at 18:61-65; *see also id.* at 28:64-29:1, 39:20-24; Tr. (Madisetti) at 1361:12-18.

Accordingly, Iwamiya fails to disclose a "surface comprising a dark-colored coating," and Sarrafzadeh failed to demonstrate that a POSITA would have been motivated to add a dark-colored coating to the "light shielding frame 18" of Iwamiya.

iv. No plurality of photodiodes "arranged in an array having a spatial configuration corresponding to a shape of the portion of the tissue measurement site encircled by the light block"

Sarrafzadeh alleged that **[15D]** is indefinite, but contended that Iwamiya discloses this element, arguing that "there are a number of photodiodes shown, and they would have, according to Masimo's interpretation, they would be arranged in a shape that corresponds to the shape of the portion of tissue measurement [sic] that is encircled by the light block." Tr. (Sarrafzadeh) at 1103:23-1104:5. But Iwamiya's figures only depict a single light receiving unit 9. *See* RX-0130 at FIGS. 1-4; *see also* Tr. (Madisetti) at 1364:7-8 ("Iwamiya Fig. 3 shows a single photodiode, not a plurality."). Sarrafzadeh did not identify any specific passage of Iwamiya in his testimony for this element or explain how Iwamiya discloses **[15D]**.

MASIMO 2042
Apple v. Masimo
IPR2024-00241

[redacted]

Accordingly, for at least the reasons above, Apple's grounds fail to disclose or render Claims 9, 18, and 27 obvious. *See* Tr. (Madisetti) at 1362:9-23, 1364:20-1365:6.

c. <u>Objective Indicia of Nonobviousness</u>

None of Apple's prior art disclosed measuring oxygen saturation at the wrist. Sarrafzadeh opined that it would have been obvious to modify the prior art to add it. *See* Tr. (Sarrafzadeh) at 1094:10-17; RDX-0007.92C. But the evidence, including Apple's own development work, shows that measuring oxygen saturation at the wrist is not as simple as retrofitting a device with red and infrared LEDs.

Apple's development of its Apple Watch pulse oximetry sensor [redacted] and involved many people who expressed doubts about constructing a sensor to detect SpO_2 on the wrist, as detailed above. *Supra* Section III.E.3.h. In 2014, Apple hired Mannheimer, who had spent over 20 years working for Nellcor, as a replacement for Lamego. Tr. (Mannheimer) at 996:9-24, 1009:2-8; CX-0289C (Mannheimer) at 180:22-181:15.

Within days of Mannheimer joining Apple, Land told him that he "would be asked to look into doing pulse oximetry at the wrist for the Apple Watch." Tr. (Mannheimer) at 996:25-997:5. Mannheimer's immediate reaction was "internally to my head, rolling my eyes, thinking as I thought of in the past with other clients like ***good luck with that***." *Id.* at 1012:12-16. Mannheimer expressed skepticism that it could even be done. Tr. (Mannheimer) at 1012:23-25; CX-0289C (Mannheimer) at 172:9-174:6. He agreed that the "signal is just enormously weak" at the wrist. Tr. (Mannheimer) at 1013:1-6.[15]

[15] Waydo similarly explained that it was very challenging to develop the blood-oxygen feature due to the difficulties of measuring blood-oxygen levels on the wrist. CX-0299C (Waydo) at 166:4-167:5.

MASIMO 2042
Apple v. Masimo
IPR2024-00241

Mannheimer investigated and determined that Apple could not simply add LEDs to Series 0 form factor to measure oxygen saturation. Tr. (Mannheimer) at 1015:9-19. Mannheimer wrote that "invention is required." CX-0177C at 13. Indeed, none of the Series 0, 1, 2, 3, 4, and 5 watches measured oxygen saturation. Tr. (Mannheimer) at 1013:7-20. Apple's failure to measure oxygen saturation in those subsequent watches further confirms that adding oxygen saturation to the wrist would not have been obvious. Tr. (Madisetti) at 1372:13-1373:5.

Apple continued to develop its sensor until the release of Series 6 in September 2020. RX-0333. After Apple's team of engineers and scientists spent continuously developing and refining the pulse oximetry sensor, Apple finally released a watch that could measure oxygen saturation.

Apple's lengthy development path, employee skepticism and recognition of the challenges associated with developing its blood-oxygen feature demonstrate that the inventions of the Asserted Claims would not have been obvious to a POSITA, as it was not obvious to a highly educated and experienced team of Apple engineers. Incredibly, despite this extensive evidence from Apple's witnesses, Sarrafzadeh opined that it would have been obvious to add pulse oximetry to the Series 0. Tr. (Sarrafzadeh) at 1094:10-17; RDX-0007.92C.

Moreover, as explained above in Section III.E.3.h, Apple's commercial success with the Accused Products and copying of Masimo further support the nonobviousness of the '745 Patent claims. Additionally, as explained above, Sarantos teaches away from using its invention to measure oxygen saturation.

MASIMO 2042
Apple v. Masimo
IPR2024-00241

[redacted]

2. 35 U.S.C. § 112 (AIA)

a. Claims 9 and 27 Have Written-Description Support

Apple failed to show by clear and convincing evidence that Claims 9 and 27 lack written-description support. Apple did not show that the specification fails to reasonably convey to a POSITA that the inventors possessed the claimed inventions. *Tobinick*, 753 F.3d at 1225-27.

Sarrafzadeh admitted that Figures 3 and 4 disclose one embodiment with a dark-colored coating (**[1D]**/**[20D]**). Tr. (Sarrafzadeh) at 1110:19-23. He also admitted that Figures 7A and B disclose another embodiment with a material configured to change the shape of light (**[1B]**/**[20B]**). *Id*. However, he argued that "there is no description on how to combine" them. Tr. (Sarrafzadeh) at 1110:19-1111:2. But he ignored the specification as a whole. *Streck*, 665 F.3d at 1285.

The specification describes Figure 3 as "a pulse oximetry ***3D sensor 300*** according to an embodiment of the present disclosure." JX-0009 at 7:4-14. The same paragraph explains that "[i]n other embodiments, for example, as describe [sic] below with respect to FIGS. 7A and 7B, the ***3D sensor 300*** can be arranged to detect light that is reflected by the tissue measurement site 102." *Id.* Thus, the specification expressly links Figure 3 to Figures 7A and 7B.

Furthermore, Figures 3, 4 and 7A-B all include a concentrator. JX-0009 at Figs. 7A-B, 3, 4. As Madisetti noted, the concentrator links the figures together in the specification. Tr. (Madisetti) at 1365:14-22. The specification explains that the concentrator is "configured to receive the spread light after it has been attenuated by or reflected from the tissue measurement site." JX-0009 at 9:30-40, Fig. 4A, 2:57-62. CDX-0012C.081 (citing JX-0009 at 9:30-40, 2:57-62). Madisetti explained that "attenuated by or reflected from the tissue" refers to both transmittance and reflectance pulse oximetry. JX-0009 at 2:57-62. Thus, "both embodiments

MASIMO 2042
Apple v. Masimo
IPR2024-00241

[redacted]

[Figs. 3, 4 and 7A-B] include a light concentrator, which the patent describes as being used in both transmittance and reflectance. This provides and links all these embodiments together, as one of ordinary skill in the art would understand that would provide written description support." Tr. (Madisetti) at 1365:14-1366:8.

This evidence demonstrates that the '745 specification provides written-description support for Claims 9 and 27. Tr. (Madisetti) at 1366:9-12.

b. <u>Claim 18 Is Definite</u>

Apple has not met its burden to show by clear and convincing evidence that Claim 18, viewed in light of the specification and prosecution history, does not "inform those skilled in the art about the scope of the invention with reasonable certainty." *Nautilus, Inc. v. Biosig Instruments, Inc.*, 572 U.S. 898 at 910 (2014) ("absolute precision is unattainable"). "[I]n assessing definiteness, claims are to be read in light of the patent's specification and prosecution history," from the perspective of a POSITA. *Id.* at 908; *see, e.g.*, *BASF Corp. v. Johnson Matthey Inc.*, 875 F.3d 1360, 1365 (Fed. Cir. 2017) (reversing finding of indefiniteness).

Sarrafzadeh argued that **[15D]** is indefinite. **[15D]** recites "the plurality of photodiodes are arranged in an array having a spatial configuration corresponding to a shape of the portion of the tissue measurement site encircled by the light block." Consistent with his other views, Sarrafzadeh used four dots to imagine shapes that no one else would see:

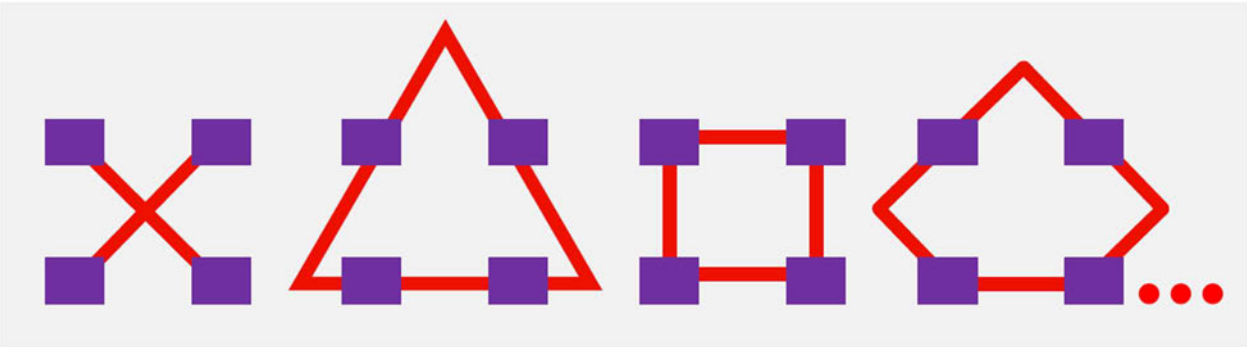

MASIMO 2042
Apple v. Masimo
IPR2024-00241

RDX-7.134C. Notably, he never explained why he selected four dots as "corresponding to a shape of the portion of the tissue measurement site encircled by the light block." He also never explained how his red lines correspond to the claim language.

Sarrafzadeh focused on **[15D]** in isolation and ignored the surrounding claim language. **[15C]** recites that the light block has "a circular shape." **[15D]** recites that the photodiodes are "arranged in an array having a spatial configuration corresponding to a shape of the portion of the tissue measurement site encircled by the light block." Sarrafzadeh never explained how his shapes correspond to the site encircled by the light block.

Sarrafzadeh also ignored the intrinsic record. Tr. (Sarrafzadeh) at 1111:3-18. As Madisetti explained, the prosecution history provides guidance as to the meaning of this term. Tr. (Madisetti) at 1366:15-1367:23. Specifically, during prosecution of a parent application to the '745 Patent, Masimo explained:

> 'arranged in an array having a spatial configuration corresponding to the shape of the irradiated portion of the tissue measurement site' … would be understood by a person having ordinary skill in the art as requiring a sufficient number of detectors such that, when arranged together in an array, can "match," "have a close similarity," or "represent" the "at least partially circular shape" of the irradiated portion of the tissue measurement site. …
>
> In order for the claimed "plurality of detectors" to "match" or "represent" an "at least partially circular shape" or an "annular shape," the "plurality of detectors" must ***include sufficient detectors to represent such shapes***. For example, six or more detectors could be arranged in an annular shape and meet the recited limitation.

CX-1760 at 322 (emphasis added). This passage describes using the shape of the tissue measurement site to determine detector placement. But Sarrafzadeh did the opposite, first placing the detectors and then fitting the shape.

Madisetti confirmed that **[15D]** "would be understood by a person having ordinary skill in the art as requiring a sufficient number of detectors, such that when arranged together in an

MASIMO 2042
Apple v. Masimo
IPR2024-00241

array can match -- have a close similarity or present [sic] the at least partially circular shape of the irradiated portion of the tissue measurement site." Tr. (Madisetti) at 1367:1-10; *see also* CX-1760 at 322; CDX-0012C.082 (citing CX-1760 at 322). Madisetti also explained that "[i]n order for the claimed plurality of detectors to match or represent an at least partially circular shape or an annular shape, the plurality of detectors must include sufficient detectors to represent such shape, for example, six or more detectors would be arranged in an annular shape and meet the recited limitation." Tr. (Madisetti) at 1367:11-16; *see also* CX-1760 at 322; CDX-0012C.082 (citing CX-1760 at 322). Thus, the meaning of **[15D]** is reasonably clear to one of skill in the art in view of the prosecution history. *Nautilus, Inc. v. Biosig Instruments, Inc.*, 572 U.S. 898,908 (2014) ("[I]n assessing definiteness, claims are to be read in light of the patent's specification and prosecution history," from the perspective of a POSITA.); *Advanced Cardiovascular Sys., Inc. v. Medtronic, Inc.,* 265 F.3d 1294, 1305 (Fed. Cir. 2001) (prosecution history of a related patent can be relevant if, for example, it addresses a limitation in common with patent-in-suit).

Moreover, **[15D]** was sufficiently definite for Sarrafzadeh to identify this limitation as allegedly in the prior art. Tr. (Sarrafzadeh) at 1103:23-1104:05. His invalidity analysis confirms that **[15D]** provides sufficient guidance for a POSITA to determine the scope of the term with reasonable certainty.

F. <u>Enforceability (Prosecution Laches)</u>

To establish laches, Apple bore the burden of establishing "unreasonable and unexplained delay" and prejudice. *Cancer Research*, 625 F.3d at 728-29. Apple identified no unreasonable or unexplained delay. Indeed, Apple called no witnesses responsible for the prosecution of the '745 Patent. Stoll provided unrebutted expert testimony that there was a "continuous unbroken chain of patent prosecution. There was no delay." Tr. (Stoll) at 1415:2-10; CX-1760

MASIMO 2042
Apple v. Masimo
IPR2024-00241

(prosecution history). Apple also presented no witness regarding prejudice and no evidence it would have done anything differently if Masimo had prosecuted its patent differently.

V. ’127 PATENT

Apple infringes ’127 Patent Claim 9. The Masimo DI Products practice Claim 9. Claim 9 depends from Claim 7.

A. Level of Ordinary Skill in the Art

There is no dispute that, for the purposes of the investigation, a person of ordinary skill in the art would be a person with “working knowledge of physiological monitoring and thermal management technology, … a Bachelor of Science in an academic discipline emphasizing design of electrical and thermal technologies in combination with training or at least one or two years of related work experience with processing of data information, including but not limited to physiological monitoring technology” and “if somebody had a Master of Science in relevant academic discipline with less than a year of related work experience, that would qualify.” Tr. (Sarrafzadeh) 1047:17-1048:4; Tr. (Goldberg) at 1391:22-24.

B. Claim Construction

As a result of the *Markman* briefing, the parties agreed that “plurality of operating wavelengths” of Claim 7 means “two or more operating wavelengths.” *See* Doc. ID 763856. The parties briefed no other terms from the ’127 Patent.

Later, Apple presented noninfringement arguments that rely on constructions of “thermal mass” and “bulk temperature.” Apple never identified these terms during claim construction. Apple’s new constructions are incorrect.

MASIMO 2042
Apple v. Masimo
IPR2024-00241

[redacted]

1. "thermal mass"

A POSITA would understand that "thermal mass" in Claim 9 is a mass that provides a bulk temperature that can be used to reliably estimate the operating wavelengths of the LEDs. The surrounding claim language supports this construction—the claimed "thermistor" measures "a bulk temperature for the thermal mass" and "the operating wavelengths [are] dependent on the bulk temperature."

The specification explains the "thermal mass" in several passages. For example, the thermal mass is: (1) within the substrate (JX-0007, Fig. 12); (2) disposed proximate the emitters so as to stabilize a bulk temperature for the emitters (JX-0007 at 10:24-26); (3) thermally coupled to a temperature sensor that provides a bulk temperature so that the wavelengths are determinable as a function of the drive currents and the bulk temperature (JX-0007 at 10:26-31); and (4) relatively significant so as to stabilize and normalize the bulk temperature so that the thermistor measurement of bulk temperature is meaningful (JX-0007 at 10:67-11:4). Goldberg explained:

> stabilization and normalization aspect of the thermal mass is specific -- specifically written in the patent specification to enable the bulk temperature measurement of the thermal mass to be used to determine the operating wavelengths of the light emitters. And that requires a balance of thermal properties, and that – that's my view.

Tr. (Goldberg) at 618:14-20, 614:19-25.

The specification also describes an embodiment of the "thermal mass." The thermal mass includes the inner layers of the substrate shown below. As shown, the inner layers have metallized areas that stabilize a bulk temperature. *Id.* at 11:10-13.

MASIMO 2042
Apple v. Masimo
IPR2024-00241

[redacted]

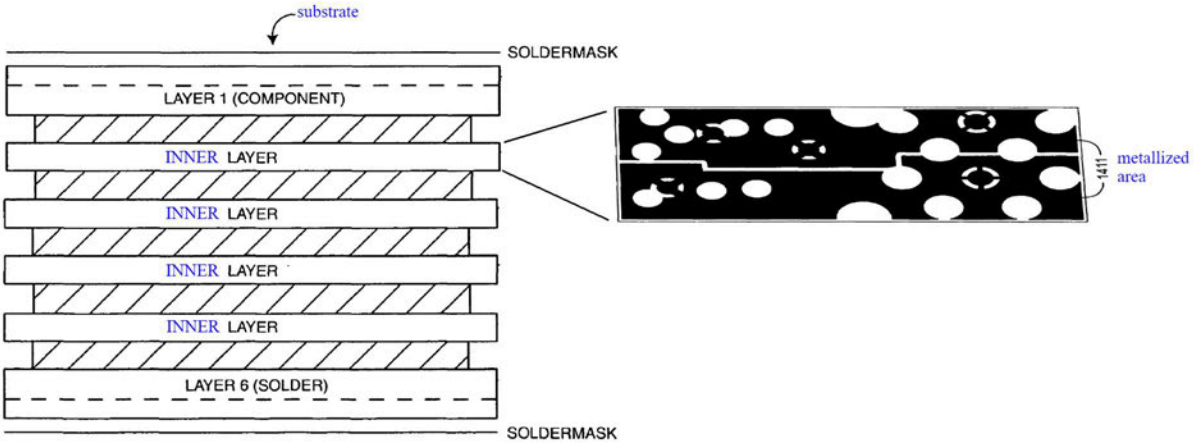

JX-0007, Figs. 14, 18 (annotated).

FIGS. 15-16, annotated below, further illustrate that the emitter substrate has LEDs mounted on component pads and wire bond pads at a component end. *Id.* at 11:16-20.

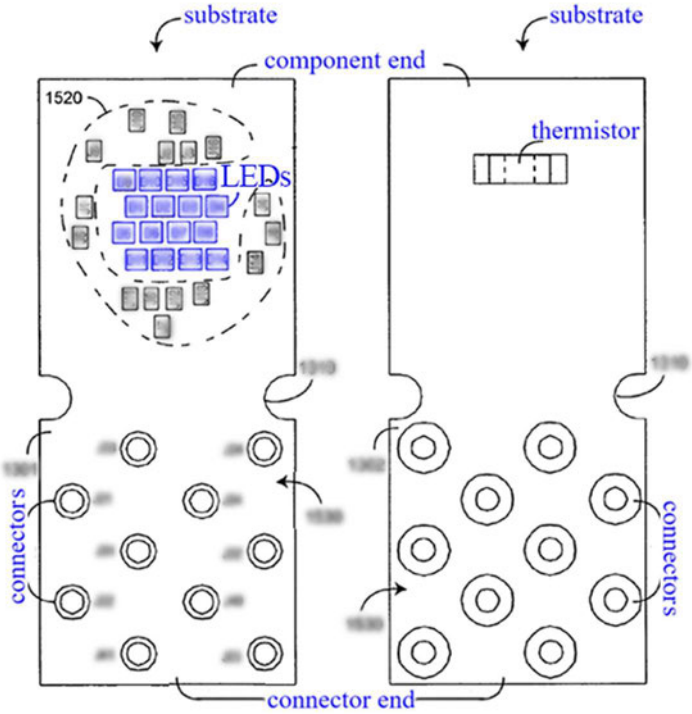

Substrate layers have traces that electrically connect the component pads and wire bond pads to the connectors 1532-1534. *Id.* at 11:25-28. A thermistor is mounted to pads at the component end. *Id.* at 11:28-30. Plated thru holes electrically connect the connector pads on the component

and solder sides. *Id.* at 11:31-33. Thus, the inner layers, LEDs and thermistor are thermally coupled through this structure.

The '127 file history is consistent with the specification. JX-0008 at 360-367. In particular, the examiner allowed the '127 Patent claims over Cheung. *Id.* Cheung is shown below:

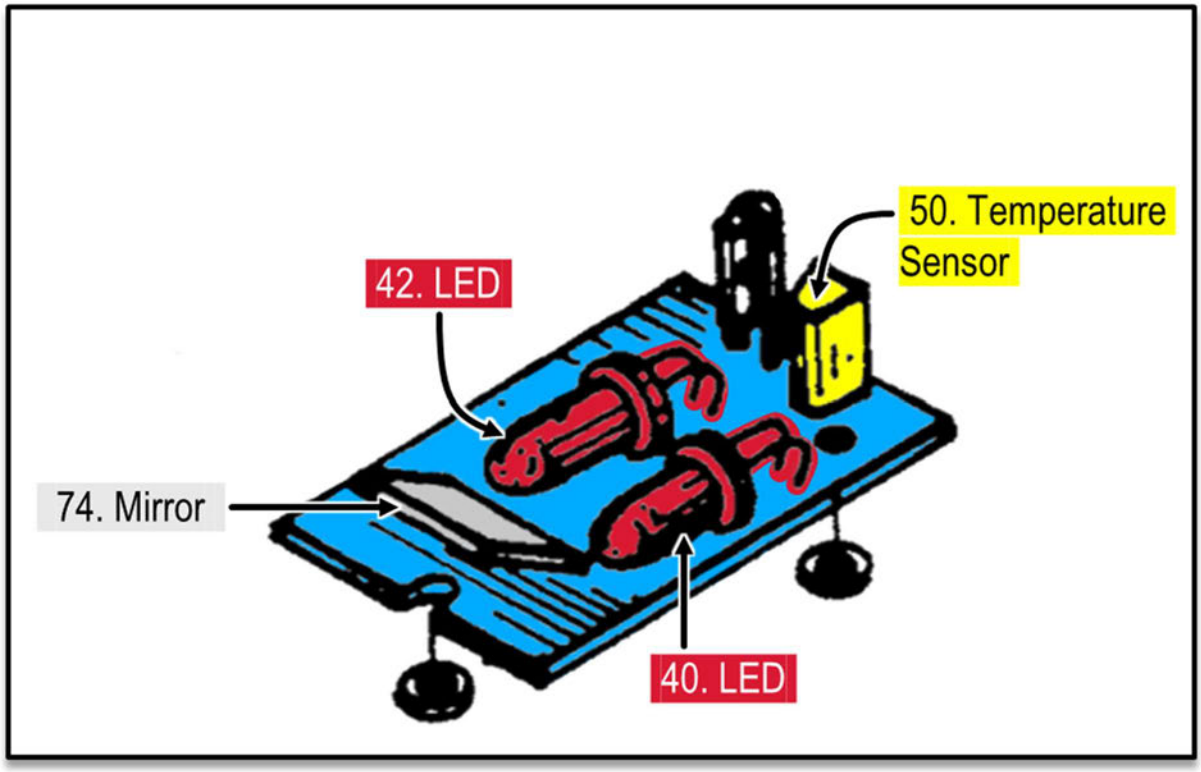

RX-0406, Fig. 11 (excerpted, annotated). The Examiner found that Cheung did ***not*** have a thermal mass disposed within a substrate.

Apple applies different constructions for validity and infringement. For validity, Apple argues that "thermal mass" should be construed to mean metal layers of a circuit board. Tr. (Sarrafzadeh) at 1051:1-1052:2. But with respect to infringement, Apple makes two claim-construction arguments.

MASIMO 2042
Apple v. Masimo
IPR2024-00241

First, Apple argues that the thermal mass must be "really thick" to provide any "thermal stability." Tr. (Sarrafzadeh) at 1065:15-1066:21. But neither Claim 7 nor the specification quantifies a minimum thickness for the thermal mass. As explained above, the thermal mass is described in terms of the ability to estimate wavelength from the temperature measurement of the thermal mass. Apple attempts to import characteristics of Masimo's patented product into the claims. But such importation is not permissible. *Zenith Labs., Inc. v. Bristol-Myers Squibb Co.*, 19 F.3d 1418, 1423 (Fed. Cir. 1994); *Atlantic Thermoplastics Co. v. Faytex Corp.*, 970 F.2d 834, 846 (Fed. Cir. 1992).

Second, Apple argues that the "thermal mass" must "stabilize" the bulk temperature ***so it does not change***. Tr. (Sarrafzadeh) at 1078:24-1079:14; *see also id.* at 1066:22-1067:3. But again, Claim 7 nowhere recites that the thermal mass does not change its temperature. JX-0007, Claim 7. Apple improperly relies on the '127 Patent's abstract and summary to attempt to incorporate a constant-temperature limitation into Claim 7. Tr. (Sarrafzadeh) at 1069:1-6; RDX-0007.53C. Contrary to Apple's interpretation, stabilizing the bulk temperature does not mean holding the temperature constant. As Diab explained, the temperature of the thermal mass changes as it follows the temperature of the LEDs to allow estimating the wavelength of each LED. Tr. (Diab) at 209:3-210:12; *see also* Tr. (Goldberg) at 618:14-20.

The thermal mass allows the bulk temperature to track LED temperature changes so that it can be used to reliably estimate the LED operating wavelengths. Tr. (Diab) at 202:19-203:6 (temperature of the thermal mass follows LED temperature while maintaining delta in between), 209:3-8 (thermal mass of Figure 14 of the '127 Patent does not keep the temperature constant; "It actually follows the temperature of the LED in sync, and that actually is the main trick."), 209:9-210:12 (elevator analogy explaining how bulk temperature tracks, but is not equal to, LED

MASIMO 2042
Apple v. Masimo
IPR2024-00241

[redacted]

temperatures); Tr. (Goldberg) at 646:19-25, 618:14-20, 614:19-25. Accordingly, the claimed thermal mass is a mass that provides a bulk temperature that can be used to reliably estimate the operating wavelengths of the LEDs.

2. <u>"bulk temperature"</u>

A POSITA would understand "bulk temperature" to be a single temperature used to estimate the operating wavelengths of all the LEDs. CDX-0013C.004 (citing JX-0007 at 10:22-48); Tr. (Goldberg) at 615:1-4. The surrounding claim language supports this construction. For example, the claimed "thermistor" measures "a bulk temperature for the thermal mass" and "the operating wavelengths [are] dependent on the bulk temperature."

The specification explains the "bulk temperature" in several passages in addition to those mentioned above:

> Advantageously, the substrate 1200 also provides ***a bulk temperature measurement*** so as to calculate the operating wavelengths for the light emitting sources.
>
> The substrate 1200 is configured to provide ***a bulk temperature*** of the emitter array 700 so as to better determine LED operating wavelengths.
>
> A thermal mass 1220 is disposed proximate the emitters 710 so as to stabilize a ***bulk temperature*** 1202 for the emitters. A temperature sensor 1230 is thermally coupled to the thermal mass 1220, wherein the temperature sensor 1230 provides a temperature sensor output 1232 responsive to the ***bulk temperature 1202 so that the wavelengths are determinable as a function of the drive currents 1210 and the bulk temperature 1202***.
>
> FIGS. 13-18 illustrate one embodiment of a substrate 1200 configured to provide thermal conductivity between an emitter array 700 (FIG. 8) and a thermistor 1540 (FIG. 16). In this manner, ***the resistance of the thermistor 1540*** (FIG. 16) ***can be measured*** in order ***to determine the bulk temperature*** of LEDs 801 (FIG. 8) mounted on the substrate 1200.

JX-0007 at 6:39-42, 6:60-62, 10:26-31, 10:62-67.

MASIMO 2042
Apple v. Masimo
IPR2024-00241

In addition, Figure 12 of the ’127 Patent belies any possibility that the thermal mass has constant uniform temperature.

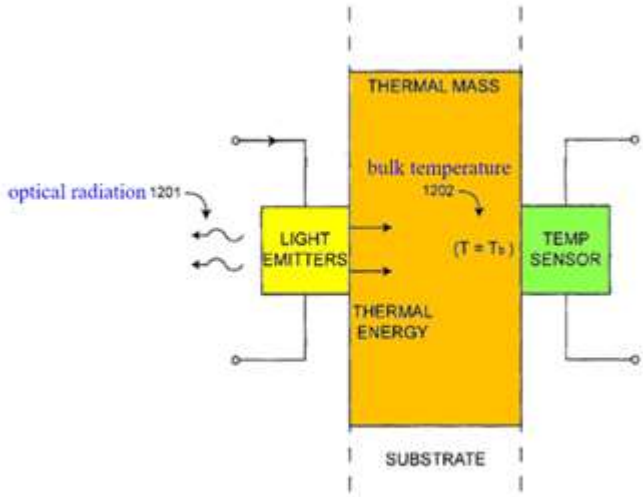

FIG. 12

JX-0007, Fig. 12 (excerpted, annotated). The emitters inject, into the thermal mass, thermal energy which flows through the thermal mass, (Tr. (Diab) at 208:18-25), naturally creating temperature differences (*i.e.*, a thermal gradient) at different portions of the thermal mass.

Apple never offered a definitive construction of “bulk temperature,” but seems to apply various constructions. Apple argued that “bulk temperature” cannot be a local temperature at the location of the thermistor. Tr. (Sarrafzadeh) at 1073:11-16, 1083:11-1084:5. The specification does not distinguish the bulk temperature from a local temperature. In fact, the specification never uses the phrase “local temperature.”

Apple misinterprets equations 3 and 4 of the specification to try to support its argument that “bulk temperature” cannot be a local temperature. As shown below, equation 3 uses a ***single*** temperature (“T_b,” which is called “bulk temperature) for all of the LEDs while equation 4 uses a different approach, with ***multiple*** temperature measurements, (“T_a,” which is not called a “bulk temperature”), one for each LED.

MASIMO 2042
Apple v. Masimo
IPR2024-00241

[redacted]

In one embodiment, an operating wavelength λ_a of each light emitter **710** is determined according to EQ. 3

$$\lambda_{a=f(}T_b, I_{drive}, \Sigma I_{drive}) \quad (3)$$

where T_b is the bulk temperature, I_{drive} is the drive current for a particular light emitter, as determined by the sensor control-

temperature sensors are configured to measure the temperature of each light emitter **710** and an operating wavelength λ_a of each light emitter **710** is determined according to EQ. 4

$$\lambda_a=f(T_a, I_{drive}, \Sigma I_{drive}) \quad (4)$$

where T_a is the temperature of a particular light emitter, I_{drive}

CDX-0013C.004 (citing JX-0007 at 10:22-48); Tr. (Goldberg) at 615:1-4. The bulk temperature is the ***single*** temperature used to estimate the wavelength of ***all*** the LEDs.

Apple also argues "bulk temperature" must be either a uniform temperature throughout the board or the "average temperature." Tr. (Sarrafzadeh) at 1082:20-1083:10. But nothing in Claim 7 or 9 or the specification suggests that the thermistor's "bulk temperature" must be a uniform or average temperature.

The specification never uses the phrases "uniform temperature" or "average temperature." The specification shows using one thermistor to measure the bulk temperature:

> FIGS. 13-18 illustrate one embodiment of a substrate 1200 configured to provide thermal conductivity between an emitter array 700 (FIG. 8) and ***a thermistor 1540*** (FIG. 16). In this manner, the resistance of ***the thermistor 1540*** (FIG. 16) can be measured in order ***to determine the bulk temperature*** of LEDs 801 (FIG. 8) mounted on the substrate 1200.

JX-0007 at 10:62-67. Thus, Apple would incorrectly exclude this single-thermistor embodiment. *Vitronics*, 90 F.3d at 1583. Sarrafzadeh acknowledged as much when he argued that one would

MASIMO 2042
Apple v. Masimo
IPR2024-00241

need "multiple temperature sensors in order to do some sort of a bulk temperature of the thermal mass." Tr. (Sarrafzadeh) at 1060:15-17 (arguing obviousness in view of Yamada).

Apple misinterprets testimony of two inventors as suggesting that "bulk temperature" means "average temperature." Tr. (Sarrafzadeh) at 1082:20-1083:10 (discussing Abdul-Hafiz and Diab deposition testimony). But that testimony undermines Apple's argument. Apple relies on one part of Abdul-Hafiz's deposition testimony: "I want to call it average, because they [referencing the layers] do have ingredient [sic: a gradient]" (RX-1195C (Abdul-Hafiz) at 99:11-13). But he went on to confirm that the "bulk temperature" is not actually an average, but is a single, "representative" measurement:

> But we need something that's related between that spot that we are measuring, because what you are measuring on the [thermistor] is a spot. But if you have a thermal mass that is good conductivity, ***you are getting a representative temperature of the whole bulk***, and that's what we call bulk temperature…. I call it representative, that's my term, because of the – because ***it predict the shift***. Might not be accurately the exact temperature, but it is a representative means, ***it changes with the change of the temperature of the bulk***.

RX-1195C (Abdul-Hafiz) at 99:13-100:4.

Diab's deposition testimony also undermines Apple's position. Diab used the phrase "***like*** an average" to convey that the bulk temperature is a single measurement for the thermal mass, not a precise average. RX-1200C (Diab) at 137:12-20. Apple ignored Diab's explanation that the bulk temperature differs from, but is correlated to, LED temperatures. *Id*. at 137:21-138:8. Thus, Diab's testimony contradicts Apple's view that the "bulk temperature" is the "average temperature" of the thermal mass.

Accordingly, the claimed "bulk temperature" is a single temperature used to estimate the operating wavelengths of all the LEDs.

MASIMO 2042
Apple v. Masimo
IPR2024-00241

C. Infringement

1. Claim 9

As shown below, the Accused Products satisfy each element of Claim 9. There is no dispute that the Accused Products: (1) have a substrate including multiple layers of [redacted] in the substrate; (2) have LEDs, photodetectors, and a thermistor on the substrate; (3) have solder and epoxy to thermally couple the thermistor and LEDs to the multiple layers of [redacted] (4) use the thermistor to take a temperature measurement called the "Board Temperature;" (5) estimate the operating wavelengths of the red and infrared LEDs from the temperature measurement of the thermistor; and (6) are tested and calibrated to verify that the thermistor's temperature measurement can be used to accurately determine the operating wavelengths of the LEDs for the calculation of oxygen saturation.

Apple disputes that the Accused Products have the "thermal mass" of **[7A]** and "bulk temperature" of **[7F]**. Tr. (Sarrafzadeh) at 1064:8-16; RDX-0007.48C. These disputes rely on Apple's new claim constructions addressed above.

The Accused Products meet the "thermal mass" (**[7A]**) and "bulk temperature" (**[7F]**) elements. As explained below, the internal [redacted] of the printed circuit board ("PCB") of the Accused Products are structurally similar to the metallized layers that make up the thermal mass in the preferred embodiment of the '127 Patent. Further, the internal [redacted] in the PCB of the Accused Products provide a bulk temperature that can be used to reliably estimate the operating wavelengths of the LEDs. And the Accused Products use the bulk temperature to estimate the LED operating wavelengths.

The evidence shows that multiple [redacted] of the Accused Products' PCB allow for measuring a single temperature from which the operating wavelengths of all LEDs can be

MASIMO 2042
Apple v. Masimo
IPR2024-00241

reliably estimated. As Goldberg explained, several Apple witnesses confirmed that the Accused Products' thermistor temperature measurement correlates with LED operating wavelengths so that the wavelengths can be reliably estimated. Tr. (Goldberg) at 623:14-624:6; CDX-0013C.017 (citing Apple deposition testimony). For example, Dr. Lefort testified:

CX-0283C (Lefort) at 78:18-79:15. Further, when asked whether Apple had an approximation of how close the thermistor temperature is to the actual LED temperature, Mehra testified that Apple CX-0291C (Mehra) at 38:14-39:3. Mehra further testified that, *Id.* at 141:9-14. He also testified, *Id.* at 163:15-17. Block and Waydo offered additional supporting testimony. CX-0281C (Block) at 185:14-186:10; CX-0299C (Waydo) at 56:3-11.

Apple documents confirm that the thermal mass within the Accused Products' PCB is calibrated to ensure that the thermistor temperature allows for a reliable estimate of LED operating wavelengths. Tr. (Goldberg) at 622:22-623:7; CDX-0013C.016 (citing CX-0011C at 23 (below, excerpted, annotated)).

MASIMO 2042
Apple v. Masimo
IPR2024-00241

This document shows Apple knew a properly designed "thermal mass of the PCB" was essential for reliable estimation of LED operating wavelengths using a single thermistor. The document indicates that Apple would have needed to modify its wavelength-estimation equation (by adding a term) if the thermal mass of the PCB were too large or the thermistor were located too far away. But Apple's PCB has sufficient thermal mass that is sized and located in relation to the thermistor to ensure the accuracy of the wavelength-estimation equation.

Additional contemporaneous Apple documents confirm that the Accused Products' thermistor temperature measurement allows LED operating wavelengths to be reliably estimated. For example,

CDX-0013C.015 (citing CX-0012C at 22); *see* RX-0307C at 11-12 (performance sensitive to wavelength variation due to temperature); Tr. (Goldberg) at 622:12-14.

MASIMO 2042
Apple v. Masimo
IPR2024-00241

CX-0012C at 22 (excerpted).

Id.; Tr. (Goldberg) at 622:15-18. This tiny error due to temperature variation indicates that the substrate includes a thermal mass that is sufficient such that measuring the single bulk temperature allows the LED operating wavelengths to be accurately estimated. Even Sarrafzadeh's tests confirmed that the thermal gradient across the substrate starts out very small and decreases over time, further showing that the substrate includes a thermal mass that stabilizes the bulk temperature so that it is a meaningful measurement for estimating LED operating wavelengths. CX-0322bC ¶ 305 (showing average temperature difference between LED location and thermistor location declining from 1.8°C five seconds after LED is turned on

MASIMO 2042
Apple v. Masimo
IPR2024-00241

to 1.1°C fifteen seconds after LED is turned on). The measurement time sufficient for a reliable blood-oxygen reading in the Apple Watch is 15 seconds. CX-0289C (Mannheimer) at 138:12-139:3; CX-0275C (Caldbeck) at 167:12-168:6.

The evidence also shows that the Accused Products' thermistor measures a bulk temperature that is used to estimate the operating wavelengths of the infrared and red LEDs used for oxygen-saturation measurements. As mentioned above, RX-0093C at 7. CX-0283C (Lefort) at 80:6-81:1, 122:14-123:5; CX-0291C (Mehra) at 141:22-143:1; RX-0414C at 62

CDX-0013C.014 (citing CX-0100C at 12 (excerpted, annotated)); *see also id.* at 11 (performance sensitive to wavelength variation due to temperature); RX-0307C at 11-12; Tr. (Goldberg) at 621:18-622:1. Other Apple documents also show that

MASIMO 2042
Apple v. Masimo
IPR2024-00241

[redacted] CX-0012C at 21-22; CX-0111C at 7-11; CX-0206C at 3, 11 ("[redacted]

Apple witnesses also confirmed that the thermistor measures a single board temperature, and that Apple designed that temperature to estimate the LED operating wavelengths. For example, Mehra testified "I can confidently say that there's a single temperature measurement that's used to estimate any of the LED temperatures." CX-0291C (Mehra) at 39:19-21; *see id.* at 38:14-39:3 ([redacted] *see also* CX-0281C (Block) at 185:21-186:10 (thermistor temperature correlates to LED temperature); CX-0299C (Waydo) at 56:3-11, 84:2-85:2 (both discussing estimation of LED operating wavelengths based on temperature); CX-0283C (Lefort) at 77:7-81:1 (discussing wavelength estimation generally), 123:6-12 (wavelength shift depends on thermistor temperature); CX-0289C (Mannheimer) at 159:5-163:17 (discussing wavelength estimation generally).

Apple source code also confirms that the operating wavelengths of the LEDs are dependent on the board temperature measured by the thermistor. Tr. (Goldberg) at 622:2-3; CPX-0154C at APL_MAS_ITC_SC_000008, lines 36-52, 61-69; *id.* at APL_MAS_ITC_SC_000010, lines 39-63, APL_MAS_ITC_SC_000012, APL_MAS_ITC_SC_000010-11, lines 62-110; *see also* CX-0299C (Waydo) at 142:12-149:9 (discussing source code).

Therefore, the Accused Products satisfy the disputed "thermal mass" (**[7A]**) and "bulk temperature" (**[7F]**) elements. For completeness, an element-by-element analysis, including both the disputed and undisputed elements, follows.

MASIMO 2042
Apple v. Masimo
IPR2024-00241

[redacted]

a. Element [7PRE]

There is no dispute that the Accused Products satisfy **[7PRE]**. Apple describes that the Accused Products detect LED light emitted into the wrist to determine blood-oxygen level. Tr. (Goldberg) at 616:4-16; CDX-0013C.007; CX-1724 at 3.

b. Element [7A]

The Accused Products satisfy **[7A]**, "a thermal mass." As explained above, a "thermal mass" provides a bulk temperature that can be used to reliably estimate the operating wavelengths of the LEDs. The Series 6 printed circuit board ("PCB") includes [redacted] to thermally couple the layers.

[redacted]

Tr. (Goldberg) at 617:9-25, 619:18-620:3; CDX-0013C.008 (citing CX-0193C); *see also* CX-0105C ([redacted] CX-1230C at 8; CX-0105C. [redacted]

[redacted]

MASIMO 2042
Apple v. Masimo
IPR2024-00241

CDX-0013C.008 (citing CX-0195C); Tr. (Goldberg) at 617:9-25; *see also* CX-0107C (Series 7). Goldberg explained that thermal properties of the materials of the Apple Watch PCB further support that the internal act as a thermal mass. Tr. (Goldberg) at 617:19-21, 618:13-21; CDX-0013C.008 (citing CX-0845 to CX-0853).

In its opening statement, Apple contended that the term "thermal mass" "is an ***unusual combination of words*** … what they are accusing are within the Apple Watch." Tr. at 54:3-8. But Apple's own documents use this exact "unusual" term to describe the relationship between

CDX-0013C.016 (citing CX-0011C at 23 (annotated)); Tr. (Goldberg) 622:22-623:7; RX-0294C (listing "thermal mass" as a Apple's engineer Mehra attempted to walk back Apple's use of the term "thermal mass." CX-0291C (Mehra) at 176:10-182:17. But the above-cited documents show that the thermal mass within the Accused Products' PCB is calibrated to ensure that the thermistor temperature allows for a reliable estimate of LED operating wavelengths.

The "thermal mass" document above shows that Apple knew a properly designed

MASIMO 2042
Apple v. Masimo
IPR2024-00241

"thermal mass of the PCB" is essential for reliable estimation of LED operating wavelengths using a single thermistor. Sarrafzadeh cannot dismiss this contemporaneous admission. He tried to interpret the document as not using a "thermal mass" as claimed by the '127 Patent because it shows that Apple would have needed to modify its wavelength-estimation equation by adding an extra term if the thermal mass of the PCB were large or the thermistor were located far away. Tr. (Sarrafzadeh) at 1071:22-1072:3. But Apple never added the extra term, showing the circuit board has sufficient thermal mass that is ideally sized and located in relation to the thermistor to ensure the accuracy of the wavelength-estimation equation.

Despite this contemporaneously documented admission, Apple argues that the Accused Products lack a "thermal mass" because the Accused Products Tr. (Sarrafzadeh) at 1065:15-1066:21 (the in the PCB "are not really thick enough to provide any stability, thermal stability"). Apple's noninfringement demonstrative shows this improper comparison:

RDX-0007.51C (excerpted); Tr. (Sarrafzadeh) at 1066:10-21. It "is ***error*** for a court to compare in its infringement analysis the accused product or process with the patentee's commercial embodiment or other version of the product or process." *Zenith*, 19 F.3d at 1423; *Atlantic Thermoplastics*, 970 F.2d at 846 ("infringement analysis compares the accused product with the patent claims, ***not an embodiment of the claims***."). Further, contrary to Apple's assertion that

MASIMO 2042
Apple v. Masimo
IPR2024-00241

its board was designed to be as thin as possible, Apple increased the board's thickness when moving from the Series 6 to the Series 7. CX-0105C; CX-0193C.

Apple also relies on Diab's testimony that the early rainbow® sensors' seemingly arguing that anything thinner would not infringe. Tr. (Sarrafzadeh) at 1068:16-21; RDX-0007.52C. But this analysis is likewise irrelevant to infringement. Sarrafzadeh relied on Diab's testimony that Tr. (Sarrafzadeh) at 1068:16-21; RDX-0007.52C. But Diab never testified that Instead, Diab testified that RX-1200C at 90:12-91:23, 94:22-96:2. Given differences in the design and intended functions of the early rainbow® sensors and the Accused Products, Apple cannot argue that the Accused Products lack a thermal mass simply by comparing of the parties' respective products.

Apple also argues that the Accused Products have no "thermal mass" because "[t]he temperature of the PCB is not stabilized. It changes. It goes up and down." Tr. (Sarrafzadeh) at 1078:24-1079:14; *see also id.* at 1066:22-1067:3. As explained above, the claims do not require the "thermal mass" keep the bulk temperature constant. Consistent with the claim language and the specification, the thermal mass need only allow for measuring a bulk temperature from which the operating wavelengths of the LEDs can be reliably estimated. The ample evidence cited above in Section V.C.1, including the "thermal mass" document above, shows that the Accused Products' internal PCB layers do provide a bulk temperature from which

MASIMO 2042
Apple v. Masimo
IPR2024-00241

the LED operating wavelengths are reliably estimated.

Sarrafzadeh also argued that Goldberg needed to "experiment" to show stabilization of the bulk temperature, citing Diab. Tr. (Sarrafzadeh) at 1069:23-1070:7; RDX-0007.56C (citing Tr. (Diab) at 238:15-19). But Diab's testimony does not suggest that Goldberg, by focusing the tests he directed on thermal conductivity, failed to show the thermal mass providing a bulk temperature. Apple seems to be arguing that Goldberg needed to replicate Apple's own internal studies. Apple's witnesses and contemporaneous documents provide ample evidence that the Accused Products have the required thermal mass. *See supra* Section V.C.1; *see also* CX-0100C at 30; CX-0111C at 810; CX-0123C at 810; CX-0206C at 3, 11; CX-0211C at 3031; CX-0057C; CX-0058C; CX-0106C; CX-0194C; CX-0198C; CX-0199C. Apple placed great importance on the accuracy of the thermistor temperature measurement. *See, e.g.,* CX-0197C at 29; CX-0196C at 8-10, 25, 33; CX-0110C at 1112, 30, 37; CX-0205C at 10-12.

Accordingly, the evidence shows that the Accused Products have a "thermal mass;" it provides a bulk temperature that reliably estimates the operating wavelengths of the LEDs.

c. <u>Element [7B]</u>

Other than the "thermal mass" phrase in **[7B]**, Apple does not dispute that the Accused Products satisfy the remainder of **[7B]**. The Accused Products include Tr. (Goldberg) at 618:22-619:9; CDX-0013C.009 (excerpted below) (citing CX-0025C; CX-0057C; CX-0198C at 17-18; CX-0199C).

MASIMO 2042
Apple v. Masimo
IPR2024-00241

[redacted]

Goldberg's tests explained below for **[7E]** and the evidence for **[7F]** further show thermal coupling. Apple witnesses also confirmed that the Accused Products meet **[7B]**. CX-0281C (Block) at 65:5-67:20, 69:22-70:2; CX-0283C (Lefort) at 66:8-67:8, 86:14-87:4, 103:4-9, 103:21-104:22, 163:6-166:3; CX-0297C (Venugopal) at 90:11-91, 95:10-96:7; *see also* CX-0011C; CX-0026C; CX-0031C; CX-0032C; CX-0033C; CX-0058C; CX-0059C; CX-0060C; CX-0197C; CX-0211C.

d. <u>Elements [7C]-[7E]</u>

Apple does not dispute that the Accused Products satisfy **[7C]**. Goldberg explained that the Accused Products' LEDs have a plurality of operating wavelengths. Tr. (Goldberg) at 619:10-17; *See also* CDX-0013C.010 (excerpted below) (citing CX-0025C (red, green, infrared LEDs); CX-0057C (same)).

MASIMO 2042
Apple v. Masimo
IPR2024-00241

[redacted]

Other than the "thermal mass" phrase in **[7D]**, Apple does not dispute that the Accused Products satisfy the remainder of **[7D]**. [redacted] CDX-013.011 (excerpted below, referencing CX-0105C, CX-0193C).

[redacted]

MASIMO 2042
Apple v. Masimo
IPR2024-00241

Other than the "thermal mass" phrase in **[7E]**, Apple does not dispute that the Accused Products satisfy the remainder of **[7E]**. The Accused Products include a thermistor, which is a temperature sensor, mounted to the substrate with thermally conductive solder connecting it to the Tr. (Goldberg) at 620:4-16; CDX-0013C.012 (excerpted below, citing CX-0025C at 31; CX-0057C at 1-2; CX-0198C at 17; CX-0845; CX-0853; CX-0206C at 3, 11; CX-0015C at 13; CX-0100C at 32; CX-0012C at 24).

Goldberg's tests also show thermal coupling of the LEDs, thermistor, and thermal mass.

MASIMO 2042
Apple v. Masimo
IPR2024-00241

[redacted]

Tr. (Goldberg) at 620:23-621:15; CDX-0013C.013 (excerpted, citing CX-0839C; CX-0840C). Goldberg explained that the decline in thermistor resistance shown in each test corresponds to a temperature increase, showing heat transfer through the [redacted] to the thermistor when heat was applied. *Id.* Despite criticizing these tests, Sarrafzadeh admitted the tests show "there is thermal conductivity" and "there is thermal coupling in the board." Tr. (Sarrafzadeh) at 1071:2-5, 1080:18-20.

The evidence for **[7A]**, **[7B]**, and **[7F]** further supports the claimed thermal coupling. Apple witnesses also confirmed that the Accused Products satisfy **[7E]**. CX-0281C (Block) at 61:22-64:3; CX-0283C (Lefort) at 78:20-21, 104:10-16, 105:5-17; CX-0287C (Land) at 49:19-51:16; CX-289C (Mannheimer) at 152:21-156:1; CX-295C (Shui) at 44:19-46:3, 60:11-14, 62:9-63:8, 91:13-92:1; *see also* CX-0058C at 1-2; CX-0026C at 31; CX-0059C at 1-2; CX-0060C at 1-2; CX-0100C at 32; CX-0067C at 24.

e. <u>Element [7F]</u>

The Accused Products satisfy **[7F]**. As explained above, "bulk temperature" in **[7F]** is a single temperature used to estimate the operating wavelengths of all the LEDs. Apple does not dispute that the Accused Products (1) have a thermistor which measures a "board temperature" and (2) use the thermistor-measured board temperature to estimate LED operating wavelengths for all infrared and red LEDs.

MASIMO 2042
Apple v. Masimo
IPR2024-00241

[redacted]

As shown by the ample evidence cited above, including the figure below, [redacted]

[redacted]

CDX-0013C.014 (citing CX-0100C at 12 (annotated)); *see also* CD-0100C at 11; Tr. (Goldberg) at 621:18-622:1.

Apple makes three noninfringement arguments for **[7F]**. Each rely on its new but flawed constructions mentioned above. First, Apple argues that the thermistor's measurement of the board temperature is "a localized temperature at the thermistor," not a "bulk temperature." Tr. (Sarrafzadeh) at 1079:15-24; RDX-0007.68C; *see also* Tr. (Sarrafzadeh) at 1073:11-16; RDX-0007.60C; RX-0414C. But Apple's various documents and testimony refer to that single temperature as the board, package-level, or sensor module temperature. All show Apple is measuring a "bulk temperature." Further, the '127 Patent does not distinguish between a local temperature and the bulk temperature. The '127 Patent discloses that the bulk temperature is a single temperature measured by a single thermistor, but that single temperature is used to estimate all LED operating wavelengths, just as in the Accused Products.

Second, Apple argues that the thermistor does not measure a "bulk temperature" because there may be a "non-uniform thermal gradient between the module thermistor and the LED" of up to 2 degrees Celsius. Tr. (Sarrafzadeh) at 1073:17-1074:6; RDX-0007.61C; RX-0093C at 9-

MASIMO 2042
Apple v. Masimo
IPR2024-00241

[redacted]

10. Apple relies on Sarrafzadeh's testing. Tr. (Sarrafzadeh) at 1078:23-1079:9; RDX-0007.67C (summarizing conclusions of testing). But nothing in the claim suggests that the thermistor's "bulk temperature" of the thermal mass ***must*** be a ***uniform*** temperature. Further, Apple's documents show that [redacted] (CX-0012C at 22), demonstrating that the PCB has a thermal mass that keeps temperature variation low enough to ensure that the bulk temperature is a meaningful measurement for reliably estimating the LED operating wavelengths.

Third, Apple argues that the thermistor does not measure an average temperature. Tr. (Sarrafzadeh) at 1083:19-1084:5.[16] As explained above, the bulk temperature is not an average temperature.

As shown above, it is undisputed that the board temperature measured by the Accused Products' thermistor is a single "package-level" or "board" temperature used to estimate the operating wavelengths of all infrared and red LEDs used in the oxygen-saturation measurement. This is the same as the single-thermistor preferred embodiment described by the '127 Patent. Thus, the Accused Products satisfy **[7F]**.

Further, as explained above in Sections V.C.1 and V.C.1.b, the thermal mass ensures the temperature measured by the Accused Products' thermistor is a meaningful temperature for reliably estimating all LED operating wavelengths used in the oxygen-saturation calculation. For the same reasons discussed above, Apple's arguments that the Accused Products' temperature measurement is not held constant fail to show that it is not a "bulk temperature" as

[16] Sarrafzadeh also criticized Goldberg's tests in connection with **[7F]** as allegedly showing only "that there is thermal coupling in the board." Tr. (Sarrafzadeh) at 1080:11-1081:18. This criticism is misplaced and does not undermine Masimo's evidence for **[7F]**, because Goldberg's tests do not relate to **[7F]**, but show thermal coupling of the thermal mass, LEDs, and thermistor. Tr. (Goldberg) at 620:17-621:15, 651:19-21; CDX-0013C.013 (citing CX-0839C; CX-0840C).

MASIMO 2042
Apple v. Masimo
IPR2024-00241

[redacted]

claimed. The "bulk temperature" is not required to remain constant under the correct claim construction.

Accordingly, the Accused Products are "capable of determining a bulk temperature for the thermal mass, the operating wavelengths dependent on the bulk temperature."

f. <u>Element [7G]</u>

Apple does not dispute that the Accused Products satisfy **[7G]**. They have four photodiode detectors that receive light from the LEDs. Tr. (Goldberg) at 625:1:9; CDX-0013C.018 (excerpted below, citing CX-0057C at 1, 3; CX-0025C at 31-32; CX-0059C at 1, 3; CX-0012C at 11; CX-0215C at 7). The LEDs and detectors are recessed within an optical barrier such that LED light is attenuated by tissue before it is received by the detectors. CX-0057C at 1; CX-0059C at 1; CX-0012C at 11; CX-0067C at 11.

[redacted]

Apple witnesses also confirmed that the Accused Products satisfy **[7G]**. CX-0281C (Block) at 86:17-87:14; CX-0283C (Lefort) at 27:18-28:5, 66:8-67:8, 103:14-17, 108:17-20; CX-0289C (Mannheimer) at 129:14-130:1, 133:2-134:12; CX-0295C (Shui) at 82:6-83:10; CX-0297C (Venugopal) at 90:11-91, 95:5-9, 175:4176:1.

MASIMO 2042
Apple v. Masimo
IPR2024-00241

[redacted]

g. Element [7H]

Apple does not dispute that the Accused Products satisfy **[7H]**. The detectors output a signal usable to determine blood oxygen saturation based upon the operating wavelengths. Tr. (Goldberg) at 625:10-626:2; CDX-0013C.019 (citing CX-0100C at 5-8; CX-0012C at 21; CX-1724 at 3). Apple witnesses also confirmed that the Accused Products meet **[7H]**. CX-0281C (Block) at 72:10-73:7, 87:10-88:13; CX-0283C (Lefort) at 31:19-21, 33:4-6, 62:22-63:7, 66:8-67:8, 113:5-116:14; CX-0289C (Mannheimer) at 134:14-138:1; CX-0295C (Shui) at 106:4-108:1.

h. Element [9]

Apple does not dispute that the Accused Products satisfy **[9]** because the temperature sensor is a thermistor. Tr. (Goldberg) at 626:3-9; CDX-0013C.020 (citing CX-0057C; CX-0025C).

In sum, the Accused Products infringe Claim 9, including all elements of Claim 7 from which it depends.

D. Domestic Industry – "Technical Prong"

Masimo's rainbow® sensors (both early and current) practice '127 Patent Claim 9. Masimo began selling the "early rainbow® sensors" around the filing date of the '127 Patent. Tr. (Diab) at 216:15-217:24. Masimo later modified the sensor and began selling the "current rainbow® sensors." *Id.* at 217:24-218:1, 220:4-221:10. Diab established that early and current rainbow® sensors use the wavelength correction of Claim 9. *Id.* at 210:13-19.

1. Element [7PRE]

Apple does not dispute that the rainbow® sensors satisfy **[7PRE]**. Goldberg explained that the rainbow® sensors use a photodetector to detect light emitted by LEDs and determine

MASIMO 2042
Apple v. Masimo
IPR2024-00241

HbCO. CDX-0013C.022 (citing CX-0430C at 5); Tr. (Goldberg) at 627:14-22; Tr. (Diab) at 222:16-223:25.

2. Element [7A]

Both the current and early rainbow® sensors satisfy **[7A]**.

a. Current rainbow® sensors

With reference to the drawing and photograph below, Goldberg explained that of the current rainbow® sensors are a thermal mass.

CDX-0013C.023 (showing CX-0590C and CX-1635C, annotated); Tr. (Goldberg) at 628:1-24. The evidence shows that Tr. (Diab) at 221:11-222:1, 224:15-24, 225:16-21; Tr. (Goldberg) at 628:8-11; CX-0589C; CX-0597C at 1, 4, 19; CX-0590C; CX-0419C at 1; CX-0845; CX-0846. *Id.*

to confirm that the temperature measured by the thermistor of the thermal mass can be used to accurately estimate the operating

MASIMO 2042
Apple v. Masimo
IPR2024-00241

wavelengths. Tr. (Diab) at 201:21-204:1, 246:4-19. Thus, of the current rainbow® sensors are a thermal mass that provides a bulk temperature that can be used to reliably estimate the operating wavelengths of the LEDs. Tr. (Goldberg) at 627:23-628:24 (Diab's testimony supports Goldberg's analysis that the current rainbow® sensors meet **[7A]**).

The evidence for **[7F]** further supports that the current rainbow® sensors meet **[7A]**.

b. <u>Early rainbow® sensors</u>

Goldberg explained that are the thermal mass. CX-0588C; Tr. (Goldberg) at 628:25-629:18. The evidence shows that Tr. (Diab) at 216:15-20, 218:2-21, 226:8-18; Tr. (Goldberg) at 628:25-629:18; CDX-0013C.024 (citing CX-0397C; CX-0588C; CX-0584C; CX-0845; CX-0849; CX-0850). is similar to the structure of the '127 Patent's preferred embodiment of the thermal mass. JX-0007, Figs. 14, 18.

Further, Diab performed simulations (*see* CX-0342C) confirming that the thermal mass of the early rainbow® sensors provides a bulk temperature that can be used to reliably estimate

MASIMO 2042
Apple v. Masimo
IPR2024-00241

the operating wavelengths of the LEDs. Tr. (Diab) at 201:21-204:1. to confirm that the temperature measured by the thermistor of the thermal mass can be used to accurately estimate the operating wavelengths. *Id.*; *see id.* at 246:4-19. Thus, the inner layers of the current rainbow® sensors are a thermal mass that provides a bulk temperature that can be used to reliably estimate the operating wavelengths of the LEDs. Tr. (Goldberg) at 628:25-629:18 (Diab testimony supports Goldberg's analysis that the early rainbow® sensors meet **[7A]**).

c. Apple's arguments based on its new incorrect claim construction do not show lack of domestic industry

Apple argues that Masimo has presented no evidence that the components identified as a thermal mass for any rainbow® sensor stabilize a bulk temperature. Tr. (Sarrafzadeh) at 1086:7-10. But the thermal mass does stabilize the bulk temperature sufficient to allow for measuring a single bulk temperature from which the sensor can reliably estimate operating wavelengths of all the LEDs.

confirms that the thermal mass stabilizes the bulk temperature, making it a meaningful measurement for reliably estimating LED operating wavelengths. And Goldberg's reliance on Diab's uncontroverted testimony regarding the simulations and testing belies Sarrafzadeh's assertion that Goldberg analyzed no test results or simulations. *See* Tr. (Sarrafzadeh) at 1087:5-8; *id.* (Goldberg) at 627:23-629:18 (stating that Diab's testimony supports Goldberg's analysis of **[7A]**).

3. Element [7B]

a. Current rainbow® sensors

Other than the "thermal mass" phrase in **[7B]**, Apple does not dispute that the current rainbow® sensors satisfy **[7B]**. Diab established that all rainbow® sensors have LEDs. Tr.

MASIMO 2042
Apple v. Masimo
IPR2024-00241

(Diab) at 211:17-23. Diab explained that the emitter package of the current rainbow® sensors, shown below, includes .

CX-0454C; Tr. (Diab) at 220:4-24. Goldberg explained that the LEDs are thermally coupled to the thermal mass by . Tr. (Goldberg) at 629:19-630:5; CX-0454C (identifies); CX-0782C at 4 (part number); CX-0797C at 1 (datasheet for); *see also* Tr. (Diab) at 224:22-225:6 (CX-0782C and CX-0797C show details about). The substrate layer to which the LEDs are mounted includes a portion made of . CX-0419C at 1, CX-0589C at 1, CX-1635C at 81. The evidence for **[7F]** further supports that **[7B]** is met.

b. <u>Early rainbow® sensors</u>

Other than the "thermal mass" phrase in **[7B]**, Apple does not dispute that the current rainbow® sensors satisfy **[7B]**. Goldberg explained that CX-0397C shows the LEDs thermally coupled to the thermal mass with . Tr. (Goldberg) at 630:6-12; CDX-0013C.026 (showing annotated CX-0397C with , multiple LEDs, and); Tr. (Diab) at 216:15-217:1 (CX-0397C shows LEDs attached to substrate); CX-0587C. The evidence for **[7F]** further supports that **[7B]** is met.

MASIMO 2042
Apple v. Masimo
IPR2024-00241

[redacted]

4. Elements [7C]-[7E] and [9]

Apple does not dispute that the rainbow® sensors satisfy **[7C]**. Goldberg explained that LEDs have a plurality of operating wavelengths. Tr. (Goldberg) at 630:13-24; CDX-0013C.027 (referencing CX-0454C for the current rainbow® sensors); CDX-0013C.028 (referencing CX-0397C for the early rainbow® sensors).

Other than the "thermal mass" phrase in **[7D]**, Apple does not dispute that the current rainbow® sensors satisfy **[7D]**. Goldberg explained the thermal mass is disposed within the substrate. Tr. (Goldberg) at 630:25-631:14; CDX-0013C.029 (referencing CX-0590C, CX-0589C, CX-0454C for the current rainbow® sensors); CDX-0013C.030 (referencing CX-0588C for the early rainbow® sensors).

Other than the "thermal mass" phrase in **[7E]**, Apple does not dispute that the current rainbow® sensors satisfy **[7E]** and **[9]**. Goldberg explained that rainbow® sensors have a temperature sensor comprising a thermistor thermally coupled to the thermal mass. Tr. (Goldberg) at 631:17-632:16; CDX-0013C.031 (referencing CX-0454C, CX-0596C for the current rainbow® sensors); CDX-0013C.032 (referencing CX-0397C, CX-0845, CX-0846 for the early rainbow® sensors); Tr. (Diab) at 211:24-212:1, 217:2-4 (CX-0397C shows early thermistor); 220:16-24 (CX-0454C shows current thermistor).

5. Element [7F]

The rainbow® sensors satisfy **[7F]**. Goldberg explained the sensor's thermistor measurement [redacted] Tr. (Goldberg) at 632:17-633:12; CDX-0013C.033 (referencing CX-0430C, CX-0816C, CX-0426C). The thermistor on rainbow® sensors "allow the measurement of the approximate temperature of the LEDs." CX-0816C at 17; CX-0426C at 12; Tr. (Diab) at 224:1-14 (CX-

MASIMO 2042
Apple v. Masimo
IPR2024-00241

0426C, CX-0427C, and CX-0816C describe the MX-3 OEM board). Specifically, the rainbow® sensors interface with . CX-0816C at 2; CX-0426C at 2. Diab explained that . Tr. (Diab) at 223:13-25; *see also* CX-0430C at 2 (Fig. 1), 3, 6. CX-0816C at 1; CX-0426C at 1.

Masimo's source code Tr. (Goldberg) at 633:18-24; CDX-0013C.034 (referencing CPX-0152C). Diab testified that he wrote "the original code for Tr. (Diab) at 212:21-213:6. Diab further identified CPX-0152C as "part of the software that *Id.* at 213:23-214:4; *see also id.* (Goldberg) at 633:13-24 (Diab's testimony supports analysis for **[7F]**).

Apple argues that CX-0430C shows that Tr. (Sarrafzadeh) at 1086:11-21. As explained above, however, the '127 Patent does not make the bulk-versus-local-temperature distinction. The evidence shows that

MASIMO 2042
Apple v. Masimo
IPR2024-00241

Apple also argues that the rainbow® sensors' thermistor does not measure "an average or at least the vast majority temperature of Tr. (Sarrafzadeh) at 1086:22-25. But, as explained above, nothing in the claims or specification of the '127 Patent suggests that its single thermistor—a device that indisputably takes a single temperature measurement at its one location—must do the technically impossible task of calculating an aggregate average or "vast majority temperature."

Finally, Apple asserts that Goldberg offered no analysis or evidence that the rainbow® sensors' thermistor measurements are used to estimate LED operating wavelengths for all the LEDs. Tr. (Sarrafzadeh) at 1087:1-4. The record contradicts this assertion. Diab's and Goldberg's testimony that the thermistor temperature is used to estimate the LED operating wavelengths is unrebutted and supported by multiple documents.

6. <u>Elements [7G] and [7H]</u>

Apple does not dispute that the rainbow® sensors satisfy **[7G]**. Goldberg explained that the sensors have a detector that outputs a signal useable to determine the physiological parameters based upon the operating wavelengths. Tr. (Goldberg) at 634:3-11; CDX-0013C.035 (referencing CX-0440C for the current rainbow® sensors, CX-0388C for the early rainbow® sensors). When in use, a finger sits between LEDs and a detector such that the emitted light passes through, and is attenuated by, tissue before reaching the detector. CX-0440C (emitter and detector); Tr. (Diab) at 222:2-15 (identifying locations of emitters and detector on CX-0440C); CX-0388C at 60 (showing finger-clip sensor for Rad-57); *see also* CX-0388C at 24, CX-0678 at 17, 20 (drawings showing emitters and detectors on opposite sides of finger); Tr. (Diab) at 214:5-16 (CX-0678 is the operator's manual for the Rad-57 device Masimo introduced in 2005), 219:6-220:3 (CX-0388C is a 2005 rainbow®

MASIMO 2042
Apple v. Masimo
IPR2024-00241

[redacted]

presentation showing the Rad-57). Diab also testified that all rainbow® sensors have at least one detector. Tr. (Diab) at 212:2-3.

Apple does not dispute that the rainbow® sensors satisfy **[7H]**. Goldberg explained the detectors on the sensors output a signal that determines rainbow parameters based upon the operating wavelengths. Tr. (Goldberg) at 634:19-635:11; CDX-0013C.036 (referencing CX-0430C, CX-0678, CX-0388C, source code for **[7F]**). For example, CX-0430C shows that [redacted] CX-0430C at 2. The document explains that [redacted]. The OEM Board uses this signal to compute patient measurement values." *Id.* at 5; *see also* Tr. (Diab) at 223:13-25 ([redacted]).

E. <u>Validity</u>

Apple failed to prove by clear and convincing evidence that Claim 9 is invalid. Apple relied on two combinations: (1) Mendelson and Webster and (2) Yamada and Noguchi. For both combinations, Apple argued that adding a temperature sensor to correct for wavelength shift to a pulse oximeter with a conventional circuit board would result in, and render obvious, the claimed invention. Tr. (Sarrafzadeh) at 1049:24-1052:2 (Mendelson circuit board), 1053:8-1054:11 (Webster temperature sensor); RDX-0007.17C (conventional circuit board); Tr. (Sarrafzadeh) at 1058:8-19 (Yamada circuit board), 1060:25-1061:15 (Noguchi temperature sensor); RDX-0007.34C (conventional circuit board). Apple's validity arguments are at odds with the Patent Office's allowance of the claims and are inconsistent with its infringement arguments.

MASIMO 2042
Apple v. Masimo
IPR2024-00241

[redacted]

1. **Obviousness**

a. **The Examiner allowed Claim 9 over Cheung**

Both of Apple's obviousness combinations are cumulative of U.S. Patent No. 5,259,381 to Cheung. The Examiner substantively examined Cheung in detail before allowing Claim 9.

Cheung disclosed compensating for wavelength shift due to temperature variations in a pulse oximeter. RX-0406. The portion of Figure 11 annotated below illustrates the LEDs and a temperature sensor on a structure shown in blue.

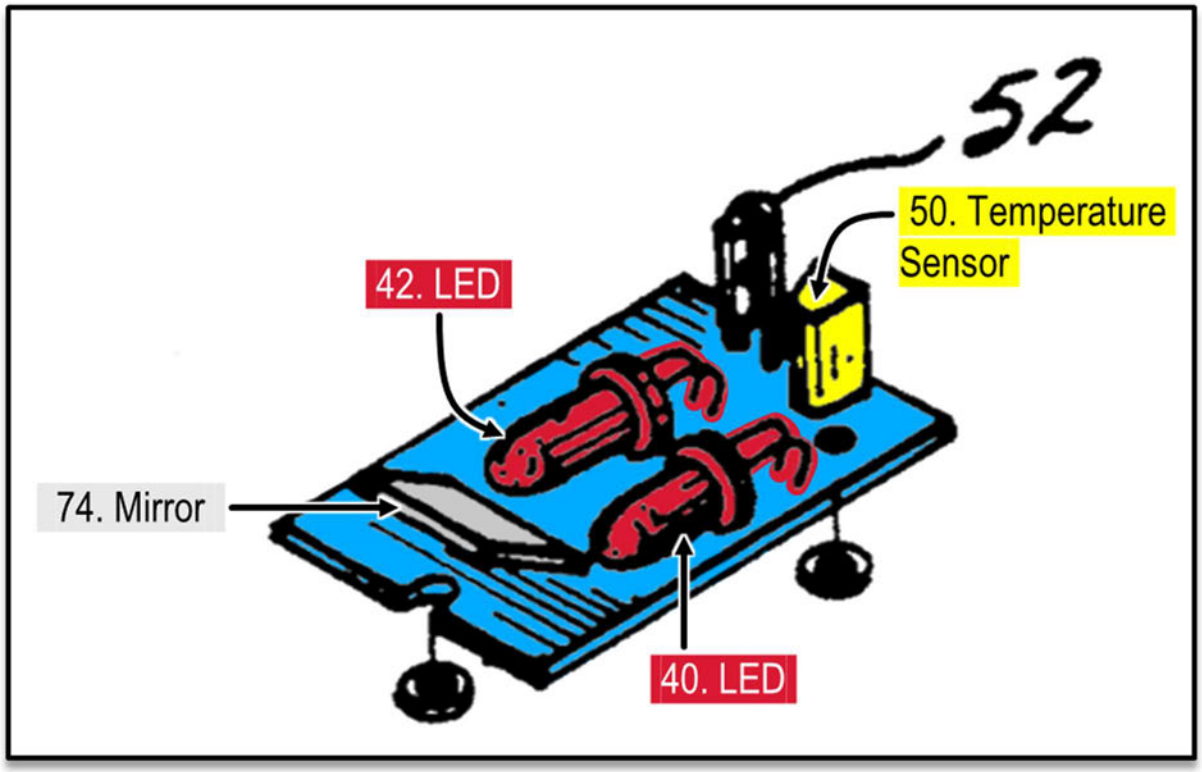

Tr. (Goldberg) at 1394:23-1396:3; CDX-0014C.003 (referencing RX-0406). Cheung provides no details about this structure, but it appears to be a conventional circuit board or substrate that connects wires to the LEDs and temperature sensor. Tr. (Goldberg) at 1395:13-21. Cheung's temperature sensor measures the "ambient temperature" of the "sensor" or "sensor assembly 48." RX-0406 at 19:32-33; Abstract; 13:25-27; Tr. (Goldberg) at 1395:25-1396:3.

MASIMO 2042
Apple v. Masimo
IPR2024-00241

The Examiner allowed claims over Cheung and other prior art, concluding:

> None of the prior art [including Cheung] teaches or suggests, either alone or in combination a physiological sensor wherein either a thermal mass is a plurality of layers of a substrate or wherein a thermal mass is disposed within a substrate proximate light emitting sources and a temperature sensor, in combination with the other claimed elements.

JX-0008 at 365. Masimo then added additional claims including the "thermal mass" elements (**[7A]** and **[7D]**), or variations. *Id*. at 400-403 (Claim 5 later became Claim 7; Claim 7 later became Claim 9). The Examiner allowed these claims. *Id.* at 417-423.

Goldberg explained, "the mere placement of a temperature sensor and LEDs on a substrate," as in Cheung does not disclose a "thermal mass" that allows the temperature sensor "to provide a bulk temperature measurement in the sense that it would be meaningful in order to correct the wavelengths." Tr. (Goldberg) at 1395:13-24. Goldberg further explained that Cheung's temperature sensor measures "the temperature of the sensor as a whole," rather than the claimed "bulk temperature for the thermal mass." *Id.* at 1395:25-1396:3.

The Examiner's allowance of Claim 9 over Cheung shows that a temperature sensor on a conventional circuit board does not disclose a "thermal mass" or a bulk temperature that is a meaningful measurement for estimating LED operating wavelengths. Yet, in both of its obviousness combinations, Apple relies on mounting a temperature sensor on a conventional circuit board of a pulse oximeter. Tr. (Sarrafzadeh) at 1049:24-1052:2 (Mendelson circuit board), 1053:8-1054:11 (Webster temperature sensor); RDX-0007.17C (conventional circuit board); Tr. (Sarrafzadeh) at 1058:8-19 (Yamada circuit board), 1060:25-1061:15 (Noguchi temperature sensor); RDX-0007.34C (conventional circuit board). Therefore, Apple's obviousness combinations are cumulative of Cheung.

MASIMO 2042
Apple v. Masimo
IPR2024-00241

[redacted]

b. Claim 9 would not have been obvious over either Apple obviousness ground.

i. Ground 1 – Mendelson and Webster

Apple failed to prove Claim 9 obvious over Mendelson and Webster.

(a) Mendelson does not disclose [7A], [7D], [7E], [7F], or [9].

Mendelson lacks **[7A]**, **[7D]**, **[7E]**, **[7F]**, and **[9]**. Sarrafzadeh relied on Mendelson's ceramic substrate, as allegedly meeting **[7A]** ("a thermal mass") and **[7D]** ("the thermal mass disposed within the substrate").

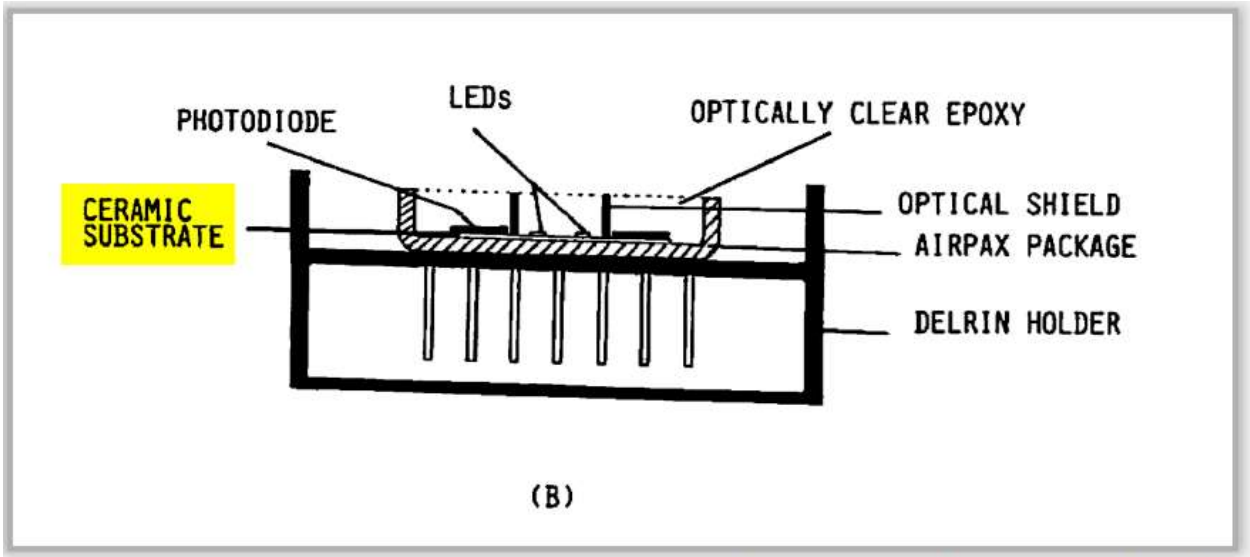

RX-0458 at 0024 (Fig. 10.16 (b))

Tr. (Sarrafzadeh) at 1049:24-1050:6, 1050:25-1051:12; RDX-0007.17C (highlighting added by Sarrafzadeh). Sarrafzadeh relied on Goldberg's assertion that the metallized ceramic layers in the current rainbow® sensors function as a thermal mass. Tr. (Sarrafzadeh) at 1051:13-23. Sarrafzadeh mischaracterizes Goldberg's testimony. Goldberg did not assert that ***every*** multilayer ceramic circuit board contains a "thermal mass." Rather, as explained in the DI section, Goldberg showed that the 127 DI Products have multiple internal substrate layers thermally coupled with plated through holes that function as a "thermal mass" because they

MASIMO 2042
Apple v. Masimo
IPR2024-00241

[redacted]

provide a bulk temperature that can be used to reliably estimate the operating wavelengths of the LEDs.

Sarrafzadeh did no analysis to show that Mendelson's ceramic substrate has, ***disposed within it***, any layers or components. Nor did he show that Mendelson provides a bulk temperature that can be used to reliably estimate the operating wavelengths of the LEDs. Mendelson provides no disclosure of any thermal properties, or of any thermal coupling of the LEDs to the substrate. Sarrafzadeh also did no testing or simulations of Mendelson. Given Sarrafzadeh's insistence on testing for infringement, his failure to conduct any analysis contradicts his assertion that **[7A]** and **[7D]** would have been obvious in view of Mendelson. Tr. (Goldberg) at 1392:12-17.

Mendelson also lacks **[7E]**, **[7F]**, and **[9]** because it does not disclose or suggest a "temperature sensor" or "thermistor." Tr. (Goldberg) at 1392:18-20.

Though Masimo does not dispute that Mendelson discloses **[7H]** ***for a device other than a pulse oximeter***, Sarrafzadeh's demonstrative regarding that limitation exposes Sarrafzadeh's unfamiliarity with pulse oximetry, something about which he claims to be an expert. In his demonstrative, Sarrafzadeh takes a figure from Mendelson and annotates it, claiming Mendelson was a pulse oximeter:

[redacted]

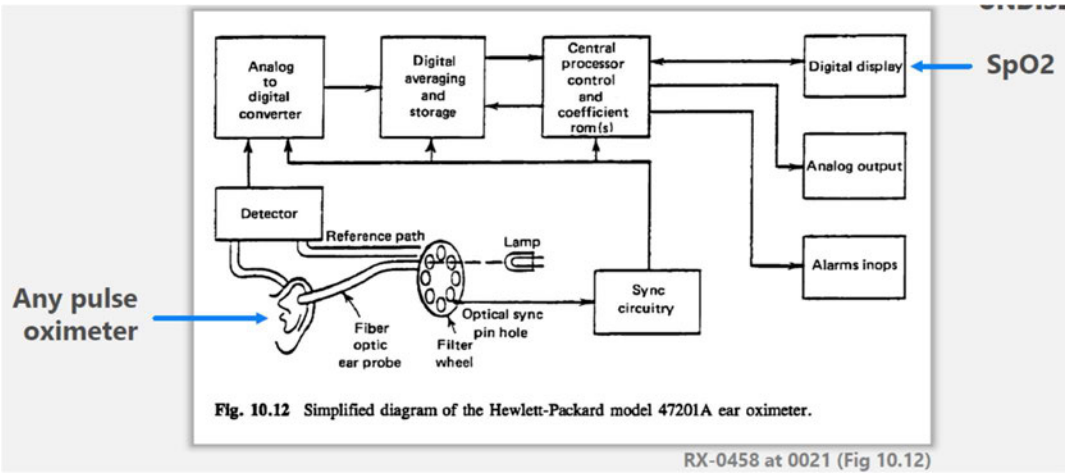

RDX-7.27C (excerpted).

But Mendelson was not a pulse oximeter. It was an eight-wavelength ear oximeter that could not measure pulse rate or pulse-oximetry-based oxygen saturation (SpO_2). If Sarrafzadeh considered the entire article, he would have known that this ear oximeter predated Aoyogi's invention of pulse oximetry (RX-0458 at 20) by two years.

(b) <u>Mendelson and Webster would not make Claim 9 obvious.</u>

Even if Webster's temperature sensor were attached to Mendelson's ceramic substrate, the resulting combination would not meet **[7A]**, **[7D]**, **[7E]**, **[7F]**, or **[9]**. Mendelson provides no description that its ceramic substrate is a thermal mass, and, as such, would stabilize a bulk temperature of the substrate so that it could reliably estimate LED operating wavelengths. Tr. (Goldberg) at 1392:21-1393:1. And Apple does not rely on Webster as disclosing a thermal mass. Tr. (Goldberg) at 1394:20-22; *see also id.* at 1396:4-7.

Webster's temperature-sensor disclosure is cumulative of Cheung, which was examined in detail before the Examiner found that no prior art discloses at least **[7D]** and allowed Claim 9. Indeed, as Goldberg explained, Webster's temperature-sensor disclosure expressly references and cites, and simply rehashes, Cheung's temperature-sensor disclosure. Tr. (Goldberg) at

MASIMO 2042
Apple v. Masimo
IPR2024-00241

[redacted]

1394:7-15; CDX-0014C.002 (referencing RX-0035 (Webster) at 85, 87: "One way to compensate for LED temperature changes is to have a temperature sensor built into a probe along with the LED and photodiode (Cheung *et al* 1993)").

The combination also does not meet **[7E]** and **[7F]**. Webster's disclosure citing to Cheung does not disclose that the temperature sensor is "thermally coupled to the thermal mass and capable of determining a bulk temperature for the thermal mass." Tr. (Goldberg) at 1396:8-11. Webster merely reflects the Cheung disclosure, which it rehashes in stating that "[t]he temperature sensor will read at best an average of the two LED temperatures, and at worst an average of the two LED temperatures along with the skin and ambient temperatures." RX-0035 at 85-86; *compare* RX-0406 at 19:32-33, Abstract, 13:25-27 (Cheung's disclosure that its temperature sensor measures the "ambient temperature" of the "sensor" or "sensor assembly 48"). Thus, Webster's temperature sensor adds nothing to what the Examiner already considered in allowing the claims. Thus, the combination of Mendelson and Webster does not meet **[7A]**, **[7D]**, **[7E]**, or **[7F]**. The combination also does not meet **[9]** because Webster does not disclose that its temperature sensor comprises a thermistor.

ii. <u>Ground 2 – Yamada and Noguchi</u>

Apple failed to prove Claim 9 invalid over Yamada and Noguchi.

(a) <u>Yamada does not disclose [7A], [7D], [7E], or [7F].</u>

Yamada lacks **[7A]**, **[7D]**, **[7E]**, **[7F]**, and **[7H]**. Apple argued that Yamada's substrate 15 of Figure 5 is a thermal mass of **[7A]** and **[7D]**.

MASIMO 2042
Apple v. Masimo
IPR2024-00241

[redacted]

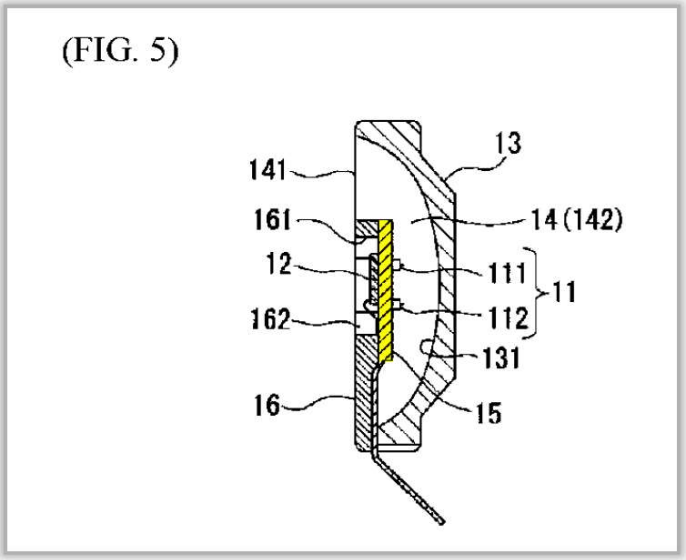

RX-0381 at Fig. 5

Tr. (Sarrafzadeh) at 1058:8-19, 1059:17-25; RDX-0007.37C (highlighting added by Sarrafzadeh). But Yamada, like Mendelson, does not disclose structure or thermal properties showing the substrate 15 is a thermal mass. Also, Sarrafzadeh did no analysis on what he claims is the thermal mass in Yamada's substrate 15. He points to nothing, disposed within that substrate, that functions as a thermal mass by stabilizing a bulk temperature so that it is a meaningful measurement for estimating LED operating wavelengths. Tr. (Goldberg) at 1396:12-18, 1396:22-1397:4.

Yamada also does not disclose **[7E]**, **[7F]**, and **[9]**. Apple relied on Yamada's temperature sensor "attached to the light probe 1." Tr. (Sarrafzadeh) at 1060:1-17. Though a temperature probe is missing from Yamada's figures, the following figures illustrate light probe 1:

MASIMO 2042
Apple v. Masimo
IPR2024-00241

[redacted]

(FIG. 1)

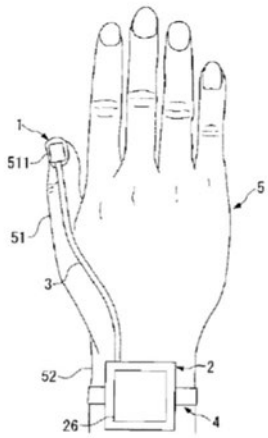

(FIG. 22)

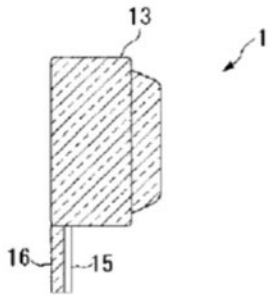

RDX-0381, Figs. 1, 22. Yamada explains that by "using the temperature sensor to monitor the temperature of the light probe 1, it is possible to take action when the temperature gets too high, for example by sounding an alarm or halting light emission from the light-emitting component 11." RX-0381 ¶ 111.

Yamada does not disclose or suggest that its temperature sensor is capable of "determining a bulk temperature for the thermal mass." Sarrafzadeh asserted that Yamada's temperature sensor "***could*** be attached to the surface" and that a POSITA could use multiple temperature sensors to do some sort of a bulk temperature of the thermal mass. Tr. (Sarrafzadeh) at 1060:8-17. But what someone "could" do with Yamada says nothing about what a POSITA would have been motivated to do. *Belden*, 805 F.3d at 1073. The claims require a temperature sensor to measure a bulk temperature. Further, as Goldberg explained:

> There is no temperature sensor here in the diagram such that it can be used for reliably estimating LED operating wavelengths.
>
> Rather, Yamada uses the temperature sensor to sound an alarm or make the system aware when the temperature gets too high for safety reasons, and that's shown in the Exhibit 381 at paragraph 111.

Tr. (Goldberg) at 1397:2-8; RX-0381 ¶ 111.

MASIMO 2042
Apple v. Masimo
IPR2024-00241

[redacted]

(b) <u>Yamada and Noguchi would not make Claim 9 obvious.</u>

The combination of Yamada and Noguchi is still missing **[7A]**, **[7D]**, **[7E]**, and **[7F]**. As with Yamada, Noguchi lacks the thermal mass of **[7A]** and **[7D]**. Tr. (Goldberg) at 1397:22-1398:8. Further, Noguchi merely discloses measuring the "temperature of ***an LED*** or for measuring the temperature in the environment in which ***the LED*** is disposed," instead of a bulk temperature of the thermal mass used for estimating all LED operating wavelengths. Tr. (Goldberg) at 1397:9-1398:8; CDX-0014C.005 (referencing RX-0353 at 1:40-43). Further, Noguchi does not use the temperature to estimate LED operating wavelengths for physiological measurements. Tr. (Goldberg) at 1397:9-21. Thus, the Yamada and Noguchi combination does not satisfy **[7F]**. The Yamada and Noguchi combination is again cumulative of Cheung.

iii. <u>Additional grounds including Scarlett</u>

Implicitly recognizing that the Mendelson/Webster and Yamada/Noguchi combinations do not disclose the thermal mass elements **[7A]** and **[7D]**, Apple turned to an additional reference, Scarlett, as allegedly disclosing those elements. Tr. (Sarrafzadeh) at 1050:7-21, 1051:10-12 ("one could add metal core or thermal core" of Scarlett to Mendelson "for better management"), 1059:23-25 (a POSITA "could add a thermal core of, for example, Scarlett" to Yamada "to provide better thermal management"); RX-0397.

The ALJ should reject these additional Mendelson/Webster/Scarlett and Yamada/Noguchi/Scarlett grounds for two reasons. First, Apple did not disclose any grounds including Scarlett as part of any combination, in response to the ALJ's Order for Apple to identify its invalidity grounds. Appendix A at 12. And while Apple told the ALJ it would limit its use of additional references to background, state of the art, or motivation to combine, its reliance on Scarlett at the hearing went well beyond those purposes. *See* Doc. ID 772058 at 2.

MASIMO 2042
Apple v. Masimo
IPR2024-00241

As shown by Sarrafzadeh's proposal to "***add***" Scarlett's metal core or thermal core to Mendelson or Yamada, Apple relied on Scarlett as part of a combination to attempt to supply an element missing from Mendelson and Yamada.

Second, Scarlett does not disclose a "thermal mass" that stabilizes a bulk temperature so that it is a meaningful measurement for estimating LED operating wavelengths. Tr. (Goldberg) at 1398:9-1399:1; CDX-0014C.006 (referencing RX-0397 at 122). Rather, Scarlett discloses a metal core for removing heat to alleviate overheating:

> [T]he problem of heat removal from tightly packaged components is an important consideration in board design…. Unfortunately, the popular epoxy fiberglass substrates … cannot provide a sufficient heat extraction path…. Multiwire boards may be manufactured with an integral heat conductor, i.e., a metal core, within the structure, to alleviate this problem.

RX-0397 at 122. Scarlett does not suggest its heat-removal components would stabilize a bulk temperature so that it is a meaningful measurement for estimating LED operating wavelengths. *Id.*; Tr. (Goldberg) at 1398:9-1399:1.

c. <u>No Motivation to Combine or Expectation Of Success</u>

Apple also failed to establish any motivation to combine, or reasonable expectation of success in combining, the prior art in a manner that yields the claimed invention. For both the Mendelson/Webster and Yamada/Noguchi combinations, Apple argued that adding a temperature sensor to a circuit board would "improve the wavelength values" and it would be expected to work because temperature sensors have been known for years. Tr. (Sarrafzadeh) at 1056:6-23, 1061:23-1062:8. But merely adding a temperature sensor to a circuit board is not the claimed invention. Claim 9 requires the thermistor to be thermally coupled to a thermal mass. The thermal mass stabilizes a bulk temperature so that the measurement of the bulk temperature is meaningful for estimating LED operating wavelengths. If it does not do this, it would not be

MASIMO 2042
Apple v. Masimo
IPR2024-00241

able to be used for the intended purpose. There is no suggestion in the prior art or any other evidence predating the '127 Patent that combining the elements in the manner claimed—*i.e.*, by disposing a thermal mass within the substrate, thermally coupling the LEDs and a thermistor to the thermal mass, and measuring a bulk temperature for the thermal mass—would improve the accuracy of physiological measurements. Tr. (Goldberg) at 1399:9-20. In view of the evidence, the inventors of the '127 Patent were the first to establish that using a thermistor to measure a bulk temperature of a thermal mass for estimating all LED operating wavelengths would be more accurate than prior-art attempts to measure the temperature of the LEDs or the environment surrounding the LEDs, such as in Cheung.

d. <u>Objective Indicia of Nonobviousness</u>

Multiple objective indicia support the nonobviousness of Claim 9. Masimo's rainbow® sensors, which Masimo showed are covered by Claim 9, have achieved enormous commercial success. Tr. (McGavock) at 1416:18-21; 1426:9-1427:7 (rainbow® products had CX-0649C (sales data); CDX-0019C.0012 (referencing CX-0649C); Tr. (Goldberg) at 1400:19-24 (relying on McGavock analysis).

Further, Masimo and its rainbow® sensors have received significant industry praise. Tr. (Goldberg) at 1400:25-1401:9 (referencing numerous awards shown in CX-1378). For example, in 2006, Masimo won the Medical Design Excellence Gold Award for the Masimo Rainbow SET Rad-57 Pulse CO-Oximeter, which allows noninvasive monitoring of carbon monoxide and methemoglobin levels in the blood. CX-1378 at 66-67. In 2007, Masimo won the Texas Society for Respiratory Care's ("TSRC") LoneStar Award for Innovation and Support for its rainbow®

MASIMO 2042
Apple v. Masimo
IPR2024-00241

SET technology. *Id.* at 62-63. At the time, the TSRC's president-elect praised the rainbow® technology as follows: "With their introduction of Masimo Rainbow SET and with it the noninvasive measurement of carboxyhemoglobin and methemoglobin, they are again advancing patient care by allowing respiratory care professionals to have a better understanding of the true oxygenation status of their patients' blood." *Id.* The Rad-57 also won the American Electronics Association's Innovative Medical Technology Award in 2006. *Id.* at 67-68. And a 2006 award-winning study found that the Rad-57 accurately measured carboxyhemoglobin and represents a major advance in the monitoring of oxygenation. *Id.* at 69-70. Further, Diab testified that "we had the American flag given to us by the fire department of New York because of how useful the rainbow® 57 was for them in the field. So I think we had praise for the product." Tr. (Diab) at 236:20-24.

Masimo established that this commercial success and industry praise are connected to the invention recited in Claim 9. In addition to showing that Claim 9 covers the rainbow® sensors, Goldberg explained that the claimed thermal mass and temperature sensor of Claim 9 are "essential to the accuracy that drove this commercial success and continues to drive the commercial success and industry praise of the rainbow® sensors." Tr. (Goldberg) at 1401:10-14; *see also* Tr. (McGavock) at 1427:2-7 (the '127 Patent is fundamental to the performance of rainbow® sensors). Further, Diab testified that the claimed invention's significant improvement in accuracy—dropping measurement error from —allowed Masimo "to make a device that can go out to market." Tr. (Diab) at 204:2-11. The '127 Patent itself emphasizes the importance of the "thermal mass" and "temperature sensor" limitations to achieving this accuracy by disclosing that the thermal mass "stabilizes and normalizes the bulk

MASIMO 2042
Apple v. Masimo
IPR2024-00241

temperature so that the thermistor measurement of bulk temperature is meaningful." JX-0007 at 11:1-4.

In addition to commercial success and industry praise, the prior art teaches away from the claimed invention. Tr. (Goldberg) at 1401:15-1402:2. Huiki teaches, even as late as August 21, 2003, that considerable variability of "the LED chip contact to the substrate and the internal heat conductivity" rendered the use of an on-board temperature sensor an unreliable temperature compensation technique and teaches that a "better way" is to "determine the junction temperature directly from the forward voltage drop of the LED junction." RX-0346 at 19:7-29. Consistent with Huiki, Webster discloses that direct measurement of LED drive current "eliminates" one potential inaccuracy "problem" of using an on-board temperature sensor for temperature compensation. RX-0035 at 85-86. Diab's testimony about the extensive research, computer simulations, and testing the inventors conducted to show that the invention worked further confirms that the claimed invention would not have been obvious. Tr. (Diab) at 192:11-204:11; CX-0342C.

Apple did not rebut this evidence. Sarrafzadeh's testimony that he saw no evidence of objective indicia was conclusory and simply ignored all this evidence. Tr. (Sarrafzadeh) at 1063:21-1064:7; RDX-0007.45C. Sarrafzadeh did not deny that the rainbow® sensors have achieved commercial success and received industry praise and did not rebut that the success and praise are attributable to the claimed invention. He also did not rebut that the inventors needed to conduct extensive research, computer simulations, and testing to show that the invention worked. And he did not address teaching away by Huiki and Webster at all. Thus, the unrebutted objective indicia confirm that Claim 9 would not have been obvious.

MASIMO 2042
Apple v. Masimo
IPR2024-00241

VI. DOMESTIC INDUSTRY – ECONOMIC PRONG

For the Masimo Watch and for the rainbow® sensors, an industry in the United States exists and is in the process of being further established, under both sub-prongs (A) and (B). That was true as of the Complaint and as of the Evidentiary Hearing. Masimo far exceeds the "relatively low" threshold for satisfying the economic prong. *See Certain Elec. Devices*, Inv. No. 337-TA-701, Order No. 58, 2010 WL 5621540, at *4 (Nov. 18, 2010); *Certain Battery-Powered Ride-On Toy Vehicles*, Inv. No. 337-TA-314, USITC Pub. No. 2420, I.D. at 21 (Aug. 1991) ("The purpose of the domestic industry requirement is to prevent the ITC from becoming a forum for resolving disputes brought by foreign complainants whose only connection with the United States is ownership of a U.S. patent.").

Masimo conducted all of its research and development for the Masimo Watch, including its underlying wrist-worn parameter-monitoring technology, in Irvine, California. Tr. (Kiani) at 118:24-119:12.

MASIMO 2042
Apple v. Masimo
IPR2024-00241

[redacted]

CX-0835C at 105; Tr. (Scruggs) at 434:18-21; CX-0635C. [redacted] CDX-0015C.007-008; CX-0648C; Tr. (Young) at 504:9-25; Tr. (McGavock) at 535:24-537:21.

Apple repeats its unsuccessful MIL #1, arguing that the economic prong analysis should be limited to pre-Complaint activities. Apple is incorrect. But even if the analysis were so restricted, Masimo would still satisfy the domestic industry requirement. As of the Complaint, Masimo had spent [redacted] domestically to develop and build the Watch, and employed [redacted] employees domestically to do so. CDX-0015C-007; CX-0648C (summarizing CX-0623C, CX-0624C, CX-0629C, CX-0632C, CX-0634C, CX-0635C, CX-0636C, CX-0646C, CX-0647C, CX-0618C, CX-0620C).

Moreover, Masimo's post-Complaint domestic industry satisfies Apple's significant and unusual development standard. The Commission has confirmed that domestic manufacturing is an "extraordinary" and "significant and unusual" development warranting the inclusion of post-

MASIMO 2042
Apple v. Masimo
IPR2024-00241

Complaint evidence. *Certain Television Sets*, 2015 WL 6755093, at *32. Masimo satisfies that standard with its manufacturing evidence. *See Certain Electronic Devices*, 2010 WL 5621540 (post-Complaint evidence is also considered when it is "new, relevant and timely disclosed[.]").

CX-0835C at 7; Tr. (Scruggs) at 433:8-23; *see also* CX-0680C (video). For example, Masimo uses

MASIMO 2042
Apple v. Masimo
IPR2024-00241

CX-0835C at 85; Tr. (Scruggs) at 433:24-434:5. Masimo also made significant investments into , such as

MASIMO 2042
Apple v. Masimo
IPR2024-00241

CX-0835C at 83; Tr. (Scruggs) at 434:22-435:4. Masimo purchased shown in the following photo

CX-0835C at 41; Tr. (Scruggs) at 435:5-10.

The next photograph shows

MASIMO 2042
Apple v. Masimo
IPR2024-00241

CX-0835C at 57; Tr. (Scruggs) at 434:6-10.

Masimo also conducts , in the following space:

MASIMO 2042
Apple v. Masimo
IPR2024-00241

CX-0835C at 48; Tr. (Scruggs) at 434:11-17. Additional photographs of Masimo Watch

MASIMO 2042
Apple v. Masimo
IPR2024-00241

[redacted]

[redacted]

[redacted]

MASIMO 2042
Apple v. Masimo
IPR2024-00241

[redacted]

[redacted]

[redacted]

MASIMO 2042
Apple v. Masimo
IPR2024-00241

[redacted]

[redacted]

[redacted]

CX-0835C at 17, 40, 43, 45, 87, 96, 104, 127, 130, 133.

Further examples of Masimo's manufacture of [redacted] are shown in the video exhibit CX-0680C screenshots:

MASIMO 2042
Apple v. Masimo
IPR2024-00241

[redacted]

[redacted]

[redacted]

MASIMO 2042
Apple v. Masimo
IPR2024-00241

Cercacor is a spinoff from Masimo Corp. and collaborates with Masimo Corp. . Tr. (Kiani) at 93:12-94:7; CX-1612C. Cercacor developed Masimo's rainbow® technology. Tr. (Kiani) at 94:8-17. Cercacor's headquarters are also in Irvine, California. *Id.* at 119:9-12. Cercacor has employed . CDX-0015C.015 (summarizing CX-0633C). Masimo has sold rainbow® sensors, with around of their cost-of-goods-sold from the U.S. CX-0649C; CDX-0006C.037 (summarizing CX-0642C). Masimo manufactures the LEDs for its rainbow® sensors in . CX-0636C. Masimo has spent in U.S. manufacturing expenses for the rainbow® sensors, and in U.S. operating expenditures for them. CDX-0006C.034 (summarizing CX-0638C and CX-0641C.)

Masimo's Financial Planning and Analysis Team (FP&A) within its finance department and at the direction of its CFO, Micah Young, prepared several financial spreadsheets detailing

MASIMO 2042
Apple v. Masimo
IPR2024-00241

its past and projected expenditures for the Masimo Watch and rainbow® sensor domestic industry products in this Investigation. Tr. (Young) at 486:8-11. Masimo's FP&A prepared the financial spreadsheets from its data warehouse. They also gathered information from Masimo's executive team and leaders of different functional groups and departments to calculate allocations and projections. *Id.* at 486:16-25; Tr. (Scruggs) at 435:21-436:12; Tr. (Al-Ali) at 322:6-324:3; Tr. (Mushin) at 359:22-360:20. Masimo's FP&A spent months preparing those spreadsheets in preparation for filing its Complaint. *Id.* at 486:12-15. Young, Masimo's CFO, confirmed that the spreadsheets and other financial exhibits are consistent with his personal experience at Masimo. *Id.* at 509:22-25.

Throughout the Evidentiary Hearing, Apple fixated on the extent to which the Masimo Watch is commercially available. However, domestic industry does not require commercial availability. *See Certain Mobile Devices with Multifunction Emulators*, Inv. No. 337-TA-1170, Order No. 19, 2020 WL 3819518 at *6-7 (June 9, 2020). Apple's expert admitted that. Tr. (Thomas) at 1318:16-21.

Apple argues that Masimo's domestic expenditures from before 2018 should be ignored in the DI analysis. Apple's argument lacks authority, and its own expert, Thomas, admitted that he has included domestic expenditure from five years pre-Complaint in other investigations. Tr. (Thomas) at 1314:1-24. But Thomas agreed that R&D activities on early versions of a device that lead to a later DI version qualify as investments, so long as development from the early version resided in the later version. *Id.* at 1314:25-1315:19. Masimo's witnesses confirmed that work on the early watch prototypes led to the W1. Tr. (Muhsin) at 342:25-343:7, 344:14-19, 345:2-7; Tr. (Scruggs) at 393:12-20, 402:2-12. Apple and

MASIMO 2042
Apple v. Masimo
IPR2024-00241

Thomas also argued that Masimo's evidence of its domestic industry activity is insufficient because Masimo's financial expert, McGavock, did not independently audit it. However, McGavock did verify that activity by inspecting Masimo's California facilities. By comparison, Thomas opined on whether Masimo satisfied the domestic industry requirement, but never went to Masimo's domestic facilities. Tr. (Thomas) at 1323:4-7.

A. Significant Investment in Plant and Equipment

1. Masimo Watch

Masimo purchased in 2014. CX-0636C; CX-0631C. Masimo uses approximately of the facility for R&D and the percentage of that R&D that has been devoted to Masimo Watch has CDX-0006C.007-008 (summarizing CX-0635C). Masimo devoted of its R&D at that facility as of December 2020 to Masimo Watch, corresponding to approximately of that facility purchased for . *Id.*

Masimo's investments in U.S. plant and equipment for the Masimo Watch include:

-

MASIMO 2042
Apple v. Masimo
IPR2024-00241

CDX-0015C.006 (summarizing CX-0629C; CX-0634C; CX-0635C; CX-0636C; CX-0640C; CX-0644C; CX-0646C; CX-0647C); *see also* CX-0645C.

Masimo addresses the significance of its domestic expenditures regarding the Masimo Watch, and addresses testimony from Apple's expert Thomas regarding those expenditures, in the subsequent section within the heading for labor or capital.

2. <u>rainbow® Sensors</u>

Masimo has conducted R&D and manufacturing for its rainbow® sensors domestically at , and , and for manufacturing LEDs. CDX-0015C.014 (summarizing CX-0629C, CX-0634C, CX-0635C, CX-0636C, CX-0641C, CX-0644C, CX-0646C, CX-0647C, CX-0649C); CX-0636C. Masimo purchased . CX-0643C; CX-0636C.

Masimo's investments in U.S. plant and equipment for the rainbow® sensors include:

-

MASIMO 2042
Apple v. Masimo
IPR2024-00241

CDX-0015C.014 (summarizing CX-0629C; CX-0634C; CX-0635C; CX-0636C; CX-0640C; CX-0641C; CX-0644C; CX-0646C; CX-0647C; CX-0649C).

Masimo addresses the significance of its domestic expenditures regarding the rainbow® Sensors in the subsequent section within the heading for labor or capital.

B. Significant Employment of Labor or Capital

1. Masimo Watch

Masimo has employed in eligible domestic labor or capital specifically for the Masimo Watch, in labor or capital for R&D on

Masimo's domestic employment of labor or capital for the Masimo Watch between 2019 Q3 and 2021 Q1 have included (*see* CDX-0006C.004):

- (CX-0629C at " " tab; Tr. (Young) at 489:2-21);
- (Tr. (Young) at 489; CX-0635C at R&D Summary tab; CDX-0006C.008 (summarizing CX-0635C at tabs));
- (Tr. (Young) at

MASIMO 2042
Apple v. Masimo
IPR2024-00241

490:19-492:13; CX-0635C at ; CDX-0006C.010 (excerpting CX-0635C; CX-0611C; CX-0835C at 41);

- (Tr. (Young) at 492:11:15; CX-0635C at);
- (Tr. (Young) at 492:16-493:7; CX-0635C at);
- (Tr. (Young) at 493:8-494:17; CX-0624C
- (Tr. (Young) at 494:18-22; CX-0623C at "Summary" tab);
- (Tr. (Young) at 494:23-495:2; CX-0646C at "Summary" tab);
- (Tr. (Young) at 495:3-10; CX-0632C at "Summary" tab);
- (CX-0618C at 4 and 5), and

MASIMO 2042
Apple v. Masimo
IPR2024-00241

[redacted] (CX-0620C at 14) (Tr. (Young) at 495:11-496:19).

Masimo's domestic expenditures in the categories immediately above for the Masimo Watch total [redacted]

Moreover, the development of the Masimo Watch relied on [redacted] Tr. (McGavock) at 560:6-561:1. Masimo has estimated that [redacted] in total U.S-based R&D in that timeframe has been devoted to wrist-worn technology—ranging between [redacted] annually. CX-0640C at "Summary" tab; Tr. (Young) at 497:1-20.

Even pursuant to Thomas' opinion excluding Masimo's wrist-worn expenditures, post-complaint expenditures, and expenditures from before 2019, that would still leave [redacted] in labor or capital that Masimo has spent on qualified domestic activities for the Masimo Watch. (CDX-0015C.010 (summarizing CX-0618C, CX-0620C, CX-0623C, CX-0624C, CX-0629C, CX-0632C, CX-0634C, CX-0635C, CX-0636C, CX-0646C, CX-0647C); Tr. (McGavock) at 541:22-543:2.

Masimo [redacted] (*see* CDX-0006C.0030-31; Tr. (Young) at 500:23-502:1):

- [redacted] (CX-0635C at R&D Summary tab);
- [redacted] (CX-0635C at "R&D Summary" tab, "Capital items" row);

MASIMO 2042
Apple v. Masimo
IPR2024-00241

[redacted]

- [redacted]

Masimo's projected domestic expenditures in the categories immediately above for the Masimo Watch total [redacted] in addition to the pre-Complaint expenditures.

MASIMO 2042
Apple v. Masimo
IPR2024-00241

The significance of Masimo's employment of labor for Masimo Watch is also shown by headcount. For example, in Q1 2021, Masimo employed full-time for R&D on Masimo Watch based on allocating time spent on the project. CX-0648C; Tr. (Young) at 503:20-504:8. Masimo employed full-time employees based on an allocation of employees across all roles as of Q1 2021 for this project. CX-0648C; Tr. (Young) at 504:9-13. When Masimo's F&PA team prepared its financial spreadsheets, CX-0648C; Tr. (Young) at 504:14-18. *Id.* at 504:19-22.

Several metrics confirm the significance of Masimo's domestic activities and expenditures for the Masimo Watch. Tr. (Kiani) at 121:11-123:16; Tr. (McGavock) at 543:16-544:14. Tr. (Kiani) at 126:19-23. Tr. (Scruggs) at 433:13-15; Tr. (McGavock) at 543:16-544:14.

Masimo's domestic activities for the Masimo Watch are also quantitively significant. Masimo . Tr. (Kiani) at 321:23-322:5. . Tr. (McGavock) at 544:21-545:25; CX-0629C Tr. (McGavock) at 544:21-545:25; CX-

MASIMO 2042
Apple v. Masimo
IPR2024-00241

0629C ("[redacted]" tab). [redacted] Tr. (McGavock) at 544:21-545:25; CDX-0015C.012 (summarizing CX-0635C). Moreover, Masimo undertook [redacted] as part of developing the Masimo Watch. Tr. (Al-Ali) at 323:18-324:25; Tr. (Mushin) at 344:14-345:1. Masimo [redacted] Tr. (McGavock) at 545:3-17; CDX-0015C.012 (summarizing CX-0635C "Employee Report" tab, [redacted] The importance of [redacted] further confirms the significance of Masimo's domestic activities for the Watch. *See Certain Handheld Electronic Computing Devices*, Inv. No. 337-TA-769, Doc. ID 472348, Order No. 34 at 7-12 (Feb. 6, 2012) (value added by domestic activities supports economic prong.) [redacted] CX-0612C at 8 and 57.

In April 2022, Masimo completed its acquisition of Sound United for $1.025B, which Masimo [redacted] CX-1637 at 19-20; Tr. (Young) at 483:1-18. The Masimo Watch's significance to Masimo is further confirmed by Masimo including it as the second product addressed in its 2021 Earnings Presentation, and identifying it as part of Masimo's strategic expansion into consumer health and wellness. CX-1637 at 17 and 21; Tr. (Young) at 482:14-25; *see also* CX-0612C.

Masimo's expenditures are also significant in absolute terms, without requiring comparative analysis. Apple never suggests that amounts exceeding [redacted] in Masimo Watch-specific R&D labor expenditures is quantitatively insignificant. Neither can Apple identify any support that the [redacted] in pre-Complaint expenditures, which remain after addressing Apple's

MASIMO 2042
Apple v. Masimo
IPR2024-00241

criticisms, is somehow insignificant. Indeed, Apple's expert Thomas, criticized Masimo's calculations and evidence, but never opined that the amounts are insignificant. Tr. (Thomas) at 1322:6-1323:7.

2. <u>rainbow® Sensors</u>

In addition to conducting R&D and manufacturing activities at facilities discussed for Masimo Watch, Masimo also manufactures sensors for the rainbow® sensors at its facility in . Tr. (McGavock) at 566:18-567:3.

Masimo's domestic employment of labor or capital for the rainbow® sensors have included, and are projected to include (*see* CDX-0015C.016; CX-0644C; CX-0632C; CX-0627C):

- from Q2 2021-2023 calculated by allocating employee cost according to time dedicated by the employees to the rainbow® sensors (CX-0644C; CX-0627C);
- from 2018-Q1 2021, and projected from Q2 2021-2023 calculated by allocating employee cost according to time dedicated by the employees to the rainbow® sensors (CX-0633C at "R&D Spend History" tab; CX-0644C);
- Cost-of-goods-sold domestic expenditures of from 2018-Q1 2021, and (CX-0638C);
- (CX-0641C);

MASIMO 2042
Apple v. Masimo
IPR2024-00241

- [redacted] from 2018-Q1 2021, and [redacted] (CX-0641C; CX-0645C).

Several metrics confirm that Masimo's domestic activities and expenditures for the rainbow® sensors are significant. For example, the rainbow® sensors' [redacted] U.S. COGS confirms quantitative significance. CDX-006C.037 (summarizing CX-0642C); CX-0625C; CX-0627C. Moreover, the portions of the devices manufactured in the U.S. include [redacted] Tr. (Young) at 505:17-506:15; CDX-0006C.037 (summarizing CX-0642C); CX-0625C; CX-0627C. Cercacor has performed the vast majority of its R&D on rainbow®, accounting for [redacted] through July of 2021. Tr. (Hammarth) at 524:25-525:5. Cercacor conducted all of that R&D in the U.S. *Id.* at 525:6-8. Cercacor has dedicated between [redacted] of its headcount to rainbow®, annually. CX-0633C. As yet another example, [redacted] of Masimo's facility investments for rainbow® are in the U.S. Tr. (McGavock) at 549:8-14 (summarizing CX-0633C and CX-0636C).

Apple's financial expert, Thomas, barely mentioned Masimo's domestic industry in the rainbow® sensors. *See* Tr. (Thomas) at 1309:16-1310:3. He chose not to address the vast majority of Masimo's expenditures on the products, and does not appear to contest that Masimo's domestic expenditures have been significant.

VII. REMEDY AND BONDING

A. Limited Exclusion Order

Section 337(d) requires the issuance of an exclusion order if the Commission determines that there is a violation of Section 337. *Certain Semiconductor Chips*, Inv. No. 337-TA-630,

MASIMO 2042
Apple v. Masimo
IPR2024-00241

Doc. ID 409629, Order No. 47, at 65-66 (August 28, 2009) (citing 19 U.S.C. § 1337(d)). The record here requires a permanent, limited exclusion order pursuant to 19 U.S.C. § 1337(d), excluding from entry into the United States all of Apple's infringing light-based physiological measurement devices and components thereof, including Apple Watch Series 6 and 7, and its Next-Generation Apple Watches. Masimo is not seeking any remedy in this investigation against Apple's prior watches, which lack the blood-oxygen feature. Tr. (Mannheimer) at 1013:7-20; *see* CPX-0191.

B. Cease and Desist Order

Apple has stipulated that it maintains commercially significant inventory of the infringing Apple Watches, CX-0128C, and expects to have commercially significant inventory of its Next-Generation Apple Watches by the target date. CX-1259C at ¶6. Accordingly, the appropriate remedy also includes a permanent cease and desist order, pursuant to 19 U.S.C. § 1337(f), directing Apple to cease and desist from importing, marketing, advertising, demonstrating, warehousing of inventory for distribution, sale, or use of infringing light-based physiological measurement devices and components thereof.

C. Applicability to Next-Generation Apple Watches

Section 337(d) requires the issuance of an exclusion order if the Commission determines that there is a violation of Section 337. *See Certain Semiconductor Chips*, Doc. ID 409629, Order No. 47 at 65-66. The Commission directs such remedy "to all products covered by the patent claims as to which a violation has been found, rather than limiting its orders to only those specific models selected for the infringement analysis." *See Certain Hardware Logic Emulation Systems*, Inv. No. 337-TA-383, Comm'n Op., 1998 WL 307240, at *9 (Mar. 1, 1998).

MASIMO 2042
Apple v. Masimo
IPR2024-00241

[redacted]

D. <u>Bond</u>

A bond for the full value of the infringing products is appropriate because those products are harming the public's perception of pulse oximetry. Several press and medical observers have noted that the Apple Watch's health features, including the blood-oxygen feature, are unreliable. CX-1616, CX-1293, CX-1409; CX-1606 (describing Apple's blood oxygen monitoring as a "gimmick"). Kiani explained that medical devices need to have both high specificity and high sensitivity. Tr. (Kiani) at 87:5-11. Kiani testified that inaccuracies in pulse oximeters lead to poor quality of care. *Id.* at 121:15-24, 125:25-126:11; CX-0612C at 7; *see also* Tr. (Waydo) at 950:25-951:7 (acknowledging awareness of Mayo study in which Apple Watch triggers false alarms).

The Apple Watch's pulse oximetry feature is also a failure by Apple's internal standards. In internal pre-Series 6 release documents about the Blood-Oxygen feature, [redacted] CX-1802C at 1. [redacted] *Id.* Despite clear deficiencies with its Blood-Oxygen feature, Apple released the feature anyway with the Series 6.

After release of the Series 6, [redacted] CX-1805C at 2-3. [redacted] *Id.* [redacted] CX-0275C (Caldbeck) 65:21-66:12.

MASIMO 2042
Apple v. Masimo
IPR2024-00241

VIII. CONCLUSION

Masimo has satisfied the domestic industry requirement and shown that Apple infringes the Asserted Patents. Apple failed to prove any of its defenses. The appropriate remedies for Apple's violation of Section 337 are a limited exclusion order and a cease-and-desist order.

CERTIFICATE OF WORD COUNT

The undersigned certifies that this brief complies with the word count requirements of Order No. 49. Specifically, this brief contains no more than 69,250 words, including footnotes and any image containing more than 20 words, but not including any image containing 20 or fewer words, the caption, the tables of contents, authorities, acronyms and abbreviations, and claim element identifiers, this word count certificate, the signature block, or the certificate of service.

Dated: June 27, 2022

By: */s/ Sheila N. Swaroop*

Stephen C. Jensen
Joseph R. Re
Irfan A. Lateef
Sheila N. Swaroop
Ted. M. Cannon
Brian C. Claassen
Alan G. Laquer
Kendall M. Loebbaka
Daniel C. Kiang
Douglas B. Wentzel
KNOBBE, MARTENS, OLSON & BEAR, LLP
2040 Main Street, Fourteenth Floor
Irvine, CA 92614
Telephone: (949) 760-0404

MASIMO 2042
Apple v. Masimo
IPR2024-00241

Facsimile: (949) 760-9502

William R. Zimmerman
Jonathan E. Bachand
KNOBBE, MARTENS, OLSON & BEAR, LLP
1717 Pennsylvania Avenue N.W., Suite 900
Washington, DC 20006
Telephone: (202) 640-6400
Facsimile: (202) 640-6401

Carol Pitzel Cruz
KNOBBE, MARTENS, OLSON & BEAR, LLP
925 4th Ave., #2500
Seattle, WA 98104
Telephone: (206) 405-2000
Facsimile: (206) 405 2001

Karl W. Kowallis
Matthew S. Friedrichs
KNOBBE, MARTENS, OLSON & BEAR, LLP
1155 Avenue of the Americas
24th Floor
New York, NY 10036
Telephone: (212) 849-3000
Facsimile: (212) 849-3001

Counsel for Complainants
Masimo Corporation and
Cercacor Laboratories, Inc.

MASIMO 2042
Apple v. Masimo
IPR2024-00241

APPENDIX A

Douglas.Wentzel

From: Frazier, Sarah <Sarah.Frazier@wilmerhale.com>
Sent: Sunday, May 8, 2022 1:59 PM
To: Sheila.Swaroop; Deol, Ravi; WH Apple-Masimo 1276 Service List
Cc: Masimo.AppleITC
Subject: RE: Inv. No. 337-TA-1276: Teleconference re Claim Narrowing

Sheila,

We disagree that Apple has not complied with the ALJ's instructions.

With respect to Lumidigm, Apple is pursuing single-reference obviousness with respect to all remaining claims and anticipation with respect to all remaining claims except 502 claim 28.

Dr. Warren's opinions with respect to the Lumidigm-based obviousness grounds are set forth in sections XII.C-D, XIII.B-C, XIV.B-C in his March 4 report, as supplemented by his March 21 amendment and March 25 supplement, and his opinions with respect to the Kansas State grounds are set forth in sections XV – through XVII of his March 4 report (again, as supplemented and amended by the March 21 and March 25 reports). Of course, to the extent these sections cross reference other discussions in his report, this identification is in no way intended to limit the disclosures in Dr. Warren's report. His secondary considerations analysis, which applies to all his obviousness opinions, is at section XVIII. As we have previously explained, Apple has narrowed to the grounds it currently intends to pursue at the evidentiary hearing. It reserves the right to narrow further based on circumstances, including Complainants own presentation of their case.

As explained below, Apple has disclosed the grounds it will rely on consistent with the ALJ's directive and the parties agreed definition of "grounds." *See*, e.g., Hrg. Tr. at 13:17-14:1. Apple has made clear, including to the ALJ, that it reserves the right to rely on other references for other reasons, including, e.g., to demonstrate the state of the art and motivations to combine. *See* Apple's 4/22 Letter to ALJ at n.2. Your allegations that Apple has not disclosed or is obscuring these references are wrong. As we have noted repeatedly, the art and Apple's experts opinions regarding the art are all clearly disclosed in Apple's expert reports. Apple intends to use the art consistent with those disclosures. Such use is permissible (as recognized by the numerous cases cited below); consistent with those cases and the parties discussion with the ALJ, such are is not within the scope of the "grounds" Apple is relying on. You have provided no authority you believe justifies moving to preclude Apple from presenting additional references that are not part of the prior art grounds it has identified.

The 112 argument to which you refer is presented at sections XIX.B.1 and XIX.B.13 of Dr. Warren's invalidity report.

Finally, we have yet to receive confirmation that Complainants are continuing to pursue all eight of the alleged "Masimo Watch" articles set forth in Dr. Madisetti's report. The ALJ instructed Complainants to disclose if there were any articles they were not pursuing. Please identify no later than close of business tomorrow the universe of "Masimo Watch" articles Complainants are pursuing.

MASIMO 2042
Apple v. Masimo
IPR2024-00241

Regards,
Sarah

From: Sheila.Swaroop <Sheila.Swaroop@knobbe.com>
Sent: Saturday, May 7, 2022 11:44 AM
To: Deol, Ravi <Ravi.Deol@wilmerhale.com>; WH Apple-Masimo 1276 Service List <WHApple-Masimo1276ServiceList@wilmerhale.com>
Cc: Masimo.AppleITC <Masimo.AppleITC@knobbe.com>
Subject: RE: Inv. No. 337-TA-1276: Teleconference re Claim Narrowing

EXTERNAL SENDER

Counsel,

The information provided by Apple does not comply with the ALJ's instructions last week. Please immediately provide the information requested below.

First, Apple's disclosure of "Lumidigm" does not indicate whether Apple intends to present any anticipation arguments based on Lumidigm. If Apple intends to do so, please identify the specific claims for which Apple intends to present an anticipation argument.

Second, for each of the "prior art grounds" set forth in Apple's May 5 email, please identify where those combinations were set forth in the Warren report. Please also confirm that Apple intends to present each of these nine prior art grounds at the evidentiary hearing.

Third, Apple's May 6 email purports to assert an enablement defense for 501 Claim 12 and 502 Claims 22 and 28. Please identify where that defense was disclosed in the Warren report for these claims.

Fourth, as we previously notified you in connection with Apple's deficient disclosures for the '745 and '127 patents, Apple is continuing to obscure the references it intends to present at the hearing by failing to identify the additional references it intends to present at the hearing relating to "state of the art, motivations to combine, and/or as background." Masimo intends to raise this issue with the ALJ and to move to preclude Apple from presenting any references that were not disclosed on the dates required by the ALJ during last week's teleconference.

Finally, Masimo reserves all rights to move to exclude the references identified below, and Apple's reliance on those references, to the extent they were not disclosed in Apple's expert reports or were not presented in Apple's expert reports in the manner Apple now seeks to use them.

Sincerely,
Sheila

MASIMO 2042
Apple v. Masimo
IPR2024-00241

From: Deol, Ravi <Ravi.Deol@wilmerhale.com>
Sent: Friday, May 6, 2022 1:36 PM
To: Masimo.AppleITC <Masimo.AppleITC@knobbe.com>
Cc: WH Apple-Masimo 1276 Service List <WHApple-Masimo1276ServiceList@wilmerhale.com>
Subject: RE: Inv. No. 337-TA-1276: Teleconference re Claim Narrowing

Counsel,

As a follow up to yesterday's email, Apple inadvertently did not include in its list of § 112 arguments the below additional lack of enablement argument that it intends to present at the hearing:

- '501 patent claim 12 and '502 patent claims 22 and 28: lack of enablement for avoiding/reducing "light piping" (Warren Opening Rpt. § XIX.B.1)

Best,

Ravi Deol | WilmerHale
+1 720 598 3459 (t)

From: Deol, Ravi
Sent: Thursday, May 5, 2022 5:23 PM
To: Masimo.AppleITC <Masimo.AppleITC@knobbe.com>
Cc: WH Apple-Masimo 1276 Service List <WHApple-Masimo1276ServiceList@wilmerhale.com>
Subject: RE: Inv. No. 337-TA-1276: Teleconference re Claim Narrowing

Counsel,

In compliance with the ALJ's directive during the April 29 teleconference, Apple sets out below the prior art grounds on which it intends to rely to argue invalidity of the asserted claims of the '501, '502, and '648 patents:

Invalidity Grounds	Asserted Claim(s)
Lumidigm	501 claim 12 502 claims 22, 28 648 claims 12, 24, 30
Lumidigm + Seiko 131 + Cramer	501 claim 12 502 claims 22, 28 648 claims 12, 24, 30
Lumidigm + Webster	502 claim 22
Lumidigm + Seiko 131 + Cramer + Webster	502 claim 22
Lumidigm + Webster + Apple 047	502 claim 28
Lumidigm + Seiko 131 + Cramer + Webster + Apple 047	502 claim 28

MASIMO 2042
Apple v. Masimo
IPR2024-00241

Kansas State 6D (sensor (RPX-6) in conjunction with data acquisition board (RPX-7)) + Seiko 131 + Haar	501 claim 12 648 claims 12, 24, 30
Kansas State 6D (sensor (RPX-6) in conjunction with data acquisition board (RPX-7)) + Seiko 131 + Haar + Webster	502 claim 22
Kansas State 6D (sensor (RPX-6) in conjunction with data acquisition board (RPX-7) and Bluetooth board (RPX-33)) + Seiko 131 + Haar + Webster + Apple 047	502 claim 28

The following table identifies the Kansas State 6D physical prior art:

Exhibit No.	Description	Bates No.
RPX-6	Kansas State Sensor (Kansas State 6D)	APL_MAS_ITC_P_00000003 (photographs at RX-0515 [APL_MAS_ITC_00378840], RX-531 [APL_MAS_ITC_00378972])
RPX-7	Kansas State Data Acquisition Board	APL_MAS_ITC_P_00000004 (photographs at RX-516 [APL_MAS_ITC_00378845], RX-517 [APL_MAS_ITC_00378857])
RPX-33	Kansas State Bluetooth Board	APL_MAS_ITC_P_00000030 (photograph at RX-0652 [APL_MAS_ITC_00556957])

The following table identifies corroborating evidence for the Kansas State 6D physical prior art.

Exhibit No.	Description	Bates No.
RX-508	Simulating Student Learning with a Novel "In-House" Pulse Oximeter Design, Yao and Warren (2005) ("Kansas State 1")	APL_MAS_ITC_00378252-APL_MAS_ITC_00378265
RX-504	Optimization of Reflectance-Mode Pulse Oximeter Sensors, Wareing (2005) ("Kansas State 2")	APL_MAS_ITC_00377841-APL_MAS_ITC_00377841
RX-500	Pulse Oximeter Improvement with an ADC-DAC Feedback Loop and a Radial Reflectance Sensor, Thompson et al. (2006) ("Kansas State 3")	APL_MAS_ITC_00374085-APL_MAS_ITC_00374078
RX-505	Design of a Plug-and-Play Pulse Oximeter, Yao et al. (2002) ("Kansas State 5")	APL_MAS_ITC_00378232-APL_MAS_ITC_00378233
RX-507	Applying the ISO/IEEE 11073 Standards to Wearable Home Health Monitoring Systems, Yao et al. (2005) ("Kansas State 6")	APL_MAS_ITC_00378242-APL_MAS_ITC_00378251
RX-509	A Wearable Point-of-Care System for Home Use That Incorporates Plug-and-Play and Wireless Standard, Yao et al. (2005) ("Kansas State 7")	APL_MAS_ITC_00378270-APL_MAS_ITC_00378278
RX-510	Design of Standards-Based Medical Components and a Plug-and-Play Home Health Monitoring System, Yao (2005) ("Kansas State 8")	APL_MAS_ITC_00378279-APL_MAS_ITC_00378433
RX-605	Pulse Oximetry Laboratory Syllabus	APL_MAS_ITC_00383326-APL_MAS_ITC_00383333

MASIMO 2042
Apple v. Masimo
IPR2024-00241

RX-575	Brightcom, IntelliBLUE BIC2101, 2001	APL_MAS_ITC_00383257-APL_MAS_ITC_00383258
RX-576	BIC2102 Product Family, Brightcom - Smart Chips, 2002	APL_MAS_ITC_00383259-APL_MAS_ITC_00383260
RX-1222	A wearable point-of-care system for home use that incorporates plug-and-play and wireless standards - PubMed	APL_MAS_ITC_02562737-APL_MAS_ITC_02562737
RX-1223	A wearable point-of-care system for home use that incorporates plug-and-play and wireless standards _ IEEE Journals & Magazine _ IEEE Xplore	APL_MAS_ITC_02562738-APL_MAS_ITC_02562740
RX-1224	Applying the ISO_IEEE 11073 standards to wearable home health monitoring systems - PubMed	APL_MAS_ITC_02562741-APL_MAS_ITC_02562741
RX-1225	Design of a plug-and-play pulse oximeter _ IEEE Conference Publication _ IEEE Xplore	APL_MAS_ITC_02562744-APL_MAS_ITC_02562746
RX-1226	Design of standards-based medical components and a plug-and-play home health monitoring system - Kansas State University Libraries	APL_MAS_ITC_02562747-APL_MAS_ITC_02562749
RX-1227	Design of standards-based medical components and a plug-and-play home health monitoring system II - Kansas State University Libraries	APL_MAS_ITC_02562750-APL_MAS_ITC_02562752
RX-1230	Pulse Oximeter Improvement with an ADC-DAC Feedback Loop and a Radial Reflectance Sensor _ IEEE Conference Publication _ IEEE Xplore	APL_MAS_ITC_02562761-APL_MAS_ITC_02562763
RX-1231	Kansas State Library StackMap - LD2668 .D5 EECE 2005 Y36	APL_MAS_ITC_02562764-APL_MAS_ITC_02562764
RX-1232	Stimulating Student Learning with a Novel _In-House_ Pulse Oximeter Design (ResearchGate)	APL_MAS_ITC_02562765-APL_MAS_ITC_02562771
RX-514	Previous Research Experience, Wareing ("Wareing Paper")	APL_MAS_ITC_00378837-APL_MAS_ITC_00378838
RX-506	A Novel Algorithm to Separate Motion Artifacts from Photoplethysmographic Signals Obtained with a Reflectance Pulse Oximeter, Yao et al. (2004)	APL_MAS_ITC_00378238-APL_MAS_ITC_00378241

Apple reserves the right to rely on additional references, including additional Kansas State physicals, photographs, and documents identified on Apple's exhibit list in support of the state of the art, motivations to combine, and/or as background.

Additionally, Apple intends to present the following arguments for invalidity under § 112 in its prehearing brief:

- All asserted '501, '502, and '648 claims: lack of written description (Warren Opening Rpt. § XIX.A)
- '502 patent claim 28: lack of enablement for "touch-screen display" and user interface "configured to display indicia responsive to the oxygen saturation measurement of the user" (Warren Opening Rpt. § XIX.B.2)
- '502 patent claim 28 and '648 patent claim 12: lack of written description for two sets of LEDs, spaced apart, each containing LEDs operating at a "first wavelength" and "second wavelength" (Warren Opening Rpt. § XIX.B.5)
- '502 patent claim 22: lack of written description for "at least four emitters … wherein each of the plurality of emitters comprises a respective set of at least three LEDs" (Warren Opening Rpt. § XIX.B.10)

MASIMO 2042
Apple v. Masimo
IPR2024-00241

- ’648 patent claim 24: lack of written description and lack of enablement for “opaque material configured to substantially prevent light piping” (Warren Opening Rpt. § XIX.B.13)
- ’745 patent claims 1 and 20: lack of written description (Sarrafzadeh Opening Rep. ¶¶ 624-28)
- ’745 patent claim 15: indefinite (Sarrafzadeh Op. Rep. ¶¶ 629-30)

Best,

Ravi Deol | WilmerHale
+1 720 598 3459 (t)

From: Frazier, Sarah <Sarah.Frazier@wilmerhale.com>
Sent: Thursday, May 5, 2022 3:31 PM
To: Sheila.Swaroop <Sheila.Swaroop@knobbe.com>; WH Apple-Masimo 1276 Service List <WHApple-Masimo1276ServiceList@wilmerhale.com>
Cc: Masimo.AppleITC <Masimo.AppleITC@knobbe.com>
Subject: RE: Inv. No. 337-TA-1276: Teleconference re Claim Narrowing

Sheila,

Apple has disclosed the grounds it will rely on, consistent with the ALJ’s explicit directive and the parties agreed definition of “grounds.” *See, e.g.*, Hrg. Tr. at 13:17-14:1. Apple has made clear, including to the ALJ, that it reserves the right to rely on other references for other reasons, including, *e.g.*, to demonstrate the state of the art and motivations to combine. *See* Apple’s 4/22 Letter to ALJ at n.2. That art and Apple’s experts opinions regarding the art are disclosed in Apple’s expert reports, and such use is plainly permissible. *See, e.g.*, *Koninklijke Philips N.V. v. Google LLC*, 948 F.3d 1330 (Fed. Cir. 2020) (permitting expert to rely on reference not in obviousness ground as evidence corroborating the knowledge of POSITA); *Arthrex, Inc. v. Smith & Nephew*, No. 2:15-cv-1047-RSP, 2016 U.S. Dist. LEXIS 203781, *9-10 (E.D. Tex. Nov. 30, 2016) (holding defendant “is otherwise not precluded from relying on unelected prior art, including without limitation, in the context of: (1) background material relevant to the technology at issue; (2) state of the art; (3) establishing what one of skill in the art would have known at the time of the invention; (4) supplying motivation or expectation of success with respect to an elected prior art combination; or (5) demonstrating objective evidence of obviousness such as simultaneous invention”); *Fujifilm Corp. v. Motorola Mobility LLC*, 2015 WL 757575, at *29-30 (N.D. Cal. Feb. 20, 2015) (holding order requiring reduction of references “used as anticipation and/or obviousness references” did not apply to use of additional references as “background technology” or “state of the art/knowledge of a person of ordinary skill in the art”); *Brit. Telecommunications PLC v. IAC/InterActiveCorp*, No. CV 18-366-WCB, 2020 WL 3047989, at *6 (D. Del. June 8, 2020) (Bryson, J.) (“[C]ourts have frequently declined to strike undisclosed references (let alone disclosed references) from expert reports, when those references are used only as ‘background’ material.”). Your allegation that Apple “fail[ed] to disclose the references it will present at the evidentiary hearing” is plainly wrong and your attempt to limit Apple’s trial presentation to exclude disclosed opinions is unfounded.

The omission of “anticipation” in my earlier email was inadvertent. Consistent with the list of grounds provided and its expert report, in addition to its single-reference obviousness arguments regarding Series 0, Apple asserts that claim 27 is also anticipated by Series 0.

Regards,

MASIMO 2042
Apple v. Masimo
IPR2024-00241

Sarah

From: Sheila.Swaroop <Sheila.Swaroop@knobbe.com>
Sent: Thursday, May 5, 2022 2:07 PM
To: Frazier, Sarah <Sarah.Frazier@wilmerhale.com>; WH Apple-Masimo 1276 Service List <WHApple-Masimo1276ServiceList@wilmerhale.com>
Cc: Masimo.AppleITC <Masimo.AppleITC@knobbe.com>
Subject: RE: Inv. No. 337-TA-1276: Teleconference re Claim Narrowing

EXTERNAL SENDER

Sarah,

We disagree that Apple has followed the ALJ's instructions. Your general reference to Apple's expert reports continues to obscure the references Apple may be presenting at the evidentiary hearing for state of the art or motivation to combine. As we informed you in March, Apple's expert reports include a voluminous number of references, including over twenty references for one motivation to combine relating to the '745 patent. In view of Apple's position, we intend to notify the ALJ today of Apple's failure to disclose the references it will present at the evidentiary hearing. We also intend to move to exclude any references that were not included in Apple's April 29 identification.

Your email below also indicates that some of Apple's prior art grounds may be based on anticipation. Please immediately identify what those are, as Apple's April 29 identification only
referred to "grounds Apple will rely on for its obviousness combinations."

Sincerely,
Sheila

From: Frazier, Sarah <Sarah.Frazier@wilmerhale.com>
Sent: Wednesday, May 4, 2022 8:35 PM
To: Sheila.Swaroop <Sheila.Swaroop@knobbe.com>; WH Apple-Masimo 1276 Service List <WHApple-Masimo1276ServiceList@wilmerhale.com>
Cc: Masimo.AppleITC <Masimo.AppleITC@knobbe.com>
Subject: RE: Inv. No. 337-TA-1276: Teleconference re Claim Narrowing

Sheila,

The list in my April 29 email is the complete list of corroborating documents for the Series 0.

MASIMO 2042
Apple v. Masimo
IPR2024-00241

Consistent with the ALJ's directive, Apple has identified the prior art grounds it will pursue as anticipatory references or as part of obviousness combinations. References that may be used when discussing state of the art or motivation to combine are disclosed in Apple's expert reports.

Regards,
Sarah

From: Sheila.Swaroop <Sheila.Swaroop@knobbe.com>
Sent: Wednesday, May 4, 2022 1:55 PM
To: Frazier, Sarah <Sarah.Frazier@wilmerhale.com>; WH Apple-Masimo 1276 Service List <WHApple-Masimo1276ServiceList@wilmerhale.com>
Cc: Masimo.AppleITC <Masimo.AppleITC@knobbe.com>
Subject: RE: Inv. No. 337-TA-1276: Teleconference re Claim Narrowing

EXTERNAL SENDER

Sarah,

In its identification of grounds required by the ALJ, Apple purported to "reserve[] the right to rely on other prior-art references for other purposes, such as to show the state of the art or as evidence of a motivation to combine." This is improper and contrary to the ALJ's instructions that the parties disclose their positions. Please immediately identify all such other references by close of business today so that we can address any such references in the pre-hearing brief.

In addition, Apple's April 29 identification stated that "[d]ocuments corroborating the Series 0 are set forth in Apple's expert reports and invalidity contentions, and include APL_MAS_ITC_02647268, APL_MAS_ITC_00565270, APL_MAS_ITC_00313254, APL_MAS_ITC_01187128, APL_MAS_ITC_01174555, APL_MAS_ITC_00313305." Apple's use of the word "include" is ambiguous, and it is not clear to us whether Apple intends to rely on any other documents for this alleged prior art ground. Please immediately identify every document Apple intends to rely on to allegedly corroborate the Series 0.

Sincerely,
Sheila

From: Frazier, Sarah <Sarah.Frazier@wilmerhale.com>
Sent: Monday, May 2, 2022 4:06 PM
To: Sheila.Swaroop <Sheila.Swaroop@knobbe.com>; WH Apple-Masimo 1276 Service List <WHApple-Masimo1276ServiceList@wilmerhale.com>
Cc: Masimo.AppleITC <Masimo.AppleITC@knobbe.com>
Subject: RE: Inv. No. 337-TA-1276: Teleconference re Claim Narrowing

Sheila,

MASIMO 2042
Apple v. Masimo
IPR2024-00241

Apple does not agree that any alleged domestic industry article is representative of any other. If Complainants are not proceeding with all eight "Masimo Watch"-related articles, as directed by the ALJ, please advise us immediately and identify those you are proceeding with.

At this time, Apple intends to pursue the grounds it has identified including at the evidentiary hearing. As we have discussed with you and the ALJ, sometimes circumstances result in further narrowing before the hearing. Apple of course reserves all rights to further narrow its hearing presentation.

Regards,
Sarah

From: Sheila.Swaroop <Sheila.Swaroop@knobbe.com>
Sent: Monday, May 2, 2022 1:40 PM
To: Frazier, Sarah <Sarah.Frazier@wilmerhale.com>; WH Apple-Masimo 1276 Service List <WHApple-Masimo1276ServiceList@wilmerhale.com>
Cc: Masimo.AppleITC <Masimo.AppleITC@knobbe.com>
Subject: RE: Inv. No. 337-TA-1276: Teleconference re Claim Narrowing

EXTERNAL SENDER

Sarah,

To the extent your email is suggesting that Masimo will be presenting a technical prong argument for the 501/502/648 patents at the evidentiary hearing for claims beyond the claims identified by Masimo on April 29, that is incorrect. To avoid any misunderstanding, please be advised that Masimo is asserting the following claims of the 501/502/648 patents for technical prong, as set forth in the opinions offered by Dr. Madisetti:

501 patent: Claim 12
502 patent: Claim 28
648 patent: Claims 12, 24, 30

The domestic industry articles for these claims are identified in Dr. Madisetti's opinions. We requested last week that Apple agree to a representative article for technical prong, and Apple declined. If Apple has an alternative suggestion for representative domestic industry articles for the technical prong, please let us know.

Please also confirm that the combinations set forth below by Apple for the '745 and '127 patents are the combinations Apple intends to present at the evidentiary hearing.

Sincerely,
Sheila

MASIMO 2042
Apple v. Masimo
IPR2024-00241

From: Frazier, Sarah <Sarah.Frazier@wilmerhale.com>
Sent: Sunday, May 1, 2022 9:55 AM
To: Sheila.Swaroop <Sheila.Swaroop@knobbe.com>; WH Apple-Masimo 1276 Service List <WHApple-Masimo1276ServiceList@wilmerhale.com>
Cc: Masimo.AppleITC <Masimo.AppleITC@knobbe.com>
Subject: RE: Inv. No. 337-TA-1276: Teleconference re Claim Narrowing

Sheila,

You have made numerous requests for Apple to confirm information contained in its contentions and expert reports – e.g., requesting identification of which combinations will be pursued for which claims. We understood you were doing so in order to confirm whether Apple was further narrowing from the universe of arguments presented in those submissions, and we accordingly promptly provided you with the requested information. By refusing to identify specifically which claims and domestic industry articles you are pursuing in response to our request, we understand you are representing that Complainants are pursuing and will present evidence on all the asserted domestic industry claims charted by Dr. Madisetti for all of the alleged "Masimo Watch" articles as set forth in his report. If that is not correct, consistent with the ALJ's directive to you, please advise immediately which domestic industry claims and articles Complainants are in fact pursuing.

Regards,
Sarah

From: Sheila.Swaroop <Sheila.Swaroop@knobbe.com>
Sent: Sunday, May 1, 2022 12:25 PM
To: Frazier, Sarah <Sarah.Frazier@wilmerhale.com>; WH Apple-Masimo 1276 Service List <WHApple-Masimo1276ServiceList@wilmerhale.com>
Cc: Masimo.AppleITC <Masimo.AppleITC@knobbe.com>
Subject: RE: Inv. No. 337-TA-1276: Teleconference re Claim Narrowing

EXTERNAL SENDER

Sarah,

The ALJ asked that Masimo identify its narrowed set of claims for the 501/502/648 patents by April 29, and we provided that information with the six claims we identified to you on that date. The claims we are asserting for infringement and for the technical prong of domestic industry are set forth in the expert opinions offered by Dr. Madisetti. The domestic industry articles we are relying upon for the technical prong of domestic industry are also identified in the expert opinions offered by Dr. Madisetti.

Sincerely,
Sheila

MASIMO 2042
Apple v. Masimo
IPR2024-00241

From: Frazier, Sarah <Sarah.Frazier@wilmerhale.com>
Sent: Friday, April 29, 2022 6:26 PM
To: Sheila.Swaroop <Sheila.Swaroop@knobbe.com>; WH Apple-Masimo 1276 Service List <WHApple-Masimo1276ServiceList@wilmerhale.com>
Cc: Masimo.AppleITC <Masimo.AppleITC@knobbe.com>
Subject: RE: Inv. No. 337-TA-1276: Teleconference re Claim Narrowing

Sheila,

The claims for each combination are below. As stated in Nina Garcia's email this evening, Apple will not pursue inequitable conduct for the '745 patent; it intends to pursue the other defenses set forth in the prehearing brief outline as applicable to the claims that remain asserted. Please provide this evening your identification of which claims from the Poeze Patents Complainants are asserting for non-infringement and domestic industry, and for all the asserted domestic industry claims identify which articles Complainants are pursuing.

- Iwamiya + Sarantos – claims 9, 18, 27
- Iwamiya + Sarantos + Venkatraman – claims 18 and 27
- Sarantos + Shie – claims 9 and 18
- Sarantos + Shie + Venkatraman – claims 18 and 27
- Apple Watch Series 0 – claims 9 and 27

Regards,
Sarah

From: Sheila.Swaroop <Sheila.Swaroop@knobbe.com>
Sent: Friday, April 29, 2022 6:17 PM
To: Frazier, Sarah <Sarah.Frazier@wilmerhale.com>; WH Apple-Masimo 1276 Service List <WHApple-Masimo1276ServiceList@wilmerhale.com>
Cc: Masimo.AppleITC <Masimo.AppleITC@knobbe.com>
Subject: RE: Inv. No. 337-TA-1276: Teleconference re Claim Narrowing

EXTERNAL SENDER

Sarah – In the list provided below, Apple has still not identified its prior art combinations for the '745 patent on a claim-by-claim basis. Please identify today which combinations apply to which claims. In addition, as we have requested previously, please identify on a claim-by-claim basis all non-prior art defenses Apple intends to present at the evidentiary hearing.

Sincerely,

MASIMO 2042
Apple v. Masimo
IPR2024-00241

Sheila

From: Frazier, Sarah <Sarah.Frazier@wilmerhale.com>
Sent: Friday, April 29, 2022 2:20 PM
To: Sheila.Swaroop <Sheila.Swaroop@knobbe.com>; WH Apple-Masimo 1276 Service List <WHApple-Masimo1276ServiceList@wilmerhale.com>
Cc: Masimo.AppleITC <Masimo.AppleITC@knobbe.com>
Subject: RE: Inv. No. 337-TA-1276: Teleconference re Claim Narrowing

Sheila,

Apple identifies the following prior art grounds for the ’127 and ’745 patents:

- ’127 Patent:
  - Mendelson 1991 + Aronow
  - Mendelson 1991 + Cheung
  - Mendelson 1991 + Huiki
  - Mendelson 1991 + Webster
  - Yamada 605 + Noguchi
- ’745 Patent:
  - Iwamiya + Sarantos
  - Iwamiya + Sarantos + Venkatraman
  - Sarantos + Shie
  - Sarantos + Shie + Venkatraman
  - Apple Watch Series 0

As you know, Apple Watch Series 0 is a device. It is identified on Apple’s exhibit list as RPX-5. A sample of Apple Watch Series 0 was provided to Complainants as APL_MAS_ITC_P_00000049. Apple another, currently unopened Series 0 that has been marked as RPX-5. Documents corroborating the Series 0 are set forth in Apple’s expert reports and invalidity contentions, and include APL_MAS_ITC_02647268, APL_MAS_ITC_00565270, APL_MAS_ITC_00313254, APL_MAS_ITC_01187128, APL_MAS_ITC_01174555, APL_MAS_ITC_00313305.

As has been previously discussed, the above identifies the grounds Apple will rely on for its obviousness combinations. Apple reserves the right to rely on other prior-art references for other purposes, such as to show the state of the art or as evidence of a motivation to combine.

Regarding your other requests, Apple is considering your request that the parties treat the Series 7 as representative of the Series 6 but requires additional information. Please clarify how Complainants propose this agreement would work as related to the evidence. For example, both sides’ experts performed testing of modules from a Series 6 device but noted the same results would apply to the Series 7. What is Complainants proposal with respect to how this agreement would extend to specific evidence such as those test results?

MASIMO 2042
Apple v. Masimo
IPR2024-00241

Apple does not agree to that the W1 may properly be considered as representative of any other alleged domestic industry articles. In accordance with the ALJ's directive yesterday, if Complainants do not intend to pursue all eight of the "Masimo Watch"-related articles presented in expert reports, please promptly identify which ones will be presented at the hearing.

In further effort to narrow the issues for hearing, Apple will not pursue its inequitable conduct claim with regards to the 745 patent at the hearing. For the avoidance of doubt, Apple maintains its prosecution laches defense with respect to the 745 patent.

Finally, as stated during the conference with the ALJ, when Apple makes its identification of the grounds it is pursuing, it will include for convenience the physical exhibit number(s) associated with any prior art device(s) or system(s) it is relying on as part of those grounds (as we have above for the Series 0). The prior art devices and systems were presented in Apple's expert reports and produced for inspection or otherwise with Bates numbers and are listed on Apple's exhibit list. It is unclear what additional information Complainants are seeking at this time.

Regards,
Sarah

From: Sheila.Swaroop <Sheila.Swaroop@knobbe.com>
Sent: Thursday, April 28, 2022 2:56 PM
To: Frazier, Sarah <Sarah.Frazier@wilmerhale.com>; WH Apple-Masimo 1276 Service List <WHApple-Masimo1276ServiceList@wilmerhale.com>
Cc: Masimo.AppleITC <Masimo.AppleITC@knobbe.com>
Subject: RE: Inv. No. 337-TA-1276: Teleconference re Claim Narrowing

EXTERNAL SENDER

Counsel,

Further to the teleconference with the ALJ today, Masimo will further streamline its case to assert only Claims 9, 18 and 27 of the '745 patent. We will provide the asserted claims of the '501/'502/'648 patents tomorrow as directed by the ALJ.

The ALJ suggested that the parties meet and confer on additional case streamlining proposals. Please let us know if Apple agrees to the following:

- The Apple Watch Series 7 is representative of Apple Watch Series 6 for purposes of infringement.
- The Masimo W1 watch is representative of the currently identified domestic industry articles for the purposes of establishing the DI technical prong for the '501/'502/'648 patents and the '745 patent.

Please let us know if Apple has any of its own ideas for streamlining the evidence the ALJ will need to consider.
Finally, we understood from the teleconference today that Apple could provide more specific identification of the three "prior art devices" on the list provided by Apple on March 21. Please provide that identification promptly. We don't believe this identification depends upon the asserted claims because Apple has identified the same alleged prior art devices against all infringed claims.

MASIMO 2042
Apple v. Masimo
IPR2024-00241

Sincerely,
Sheila

From: Frazier, Sarah <Sarah.Frazier@wilmerhale.com>
Sent: Thursday, April 28, 2022 6:36 AM
To: Sheila.Swaroop <Sheila.Swaroop@knobbe.com>; WH Apple-Masimo 1276 Service List <WHApple-Masimo1276ServiceList@wilmerhale.com>
Cc: Masimo.AppleITC <Masimo.AppleITC@knobbe.com>
Subject: RE: Inv. No. 337-TA-1276: Teleconference re Claim Narrowing

Sheila,

Thank you for confirming. The reference to "a prior art device" in the footnote refers to a single device or system; we do not agree that is necessarily commensurate with each physical exhibit as multiple components of some systems were each labeled separately for purposes of inspection and exhibit numbering. Which specific physical devices or systems Apple may rely on depends on the claims that Complainants assert.

Regards,
Sarah

From: Sheila.Swaroop <Sheila.Swaroop@knobbe.com>
Sent: Wednesday, April 27, 2022 2:14 PM
To: Frazier, Sarah <Sarah.Frazier@wilmerhale.com>; WH Apple-Masimo 1276 Service List <WHApple-Masimo1276ServiceList@wilmerhale.com>
Cc: Masimo.AppleITC <Masimo.AppleITC@knobbe.com>
Subject: RE: Inv. No. 337-TA-1276: Teleconference re Claim Narrowing

EXTERNAL SENDER

Sarah,

Regarding the "ground" issue, Masimo does not dispute Apple's definition of a ground as set forth on page 1 of Apple's April 22 letter brief (that A, A+B, and A+B+C would constitute three "grounds"). However, Masimo needs some clarity with regard to the footnote Apple appended to this definition. In particular, when Apple refers to "a prior art device," it's our understanding that Apple is referring to a single physical exhibit. Please confirm. It would also help if Apple could identify sometime today which physical exhibits Apple is relying upon for any of its grounds so that we can consider the proposal in footnote 1 of Apple's letter brief regarding "associated documents."

Thanks,
Sheila

MASIMO 2042
Apple v. Masimo
IPR2024-00241

From: Frazier, Sarah <Sarah.Frazier@wilmerhale.com>
Sent: Wednesday, April 27, 2022 7:35 AM
To: Masimo.AppleITC <Masimo.AppleITC@knobbe.com>
Cc: WH Apple-Masimo 1276 Service List <WHApple-Masimo1276ServiceList@wilmerhale.com>
Subject: RE: Inv. No. 337-TA-1276: Teleconference re Claim Narrowing

Counsel,

As requested below, please advise if Complainants believe there is any dispute as to the definition of "ground" set forth in Apple's letter to the ALJ.

Regards,
Sarah

From: Frazier, Sarah <Sarah.Frazier@wilmerhale.com>
Sent: Tuesday, April 26, 2022 10:35 AM
To: Masimo.AppleITC <Masimo.AppleITC@knobbe.com>
Cc: WH Apple-Masimo 1276 Service List <WHApple-Masimo1276ServiceList@wilmerhale.com>
Subject: FW: Inv. No. 337-TA-1276: Teleconference re Claim Narrowing

Counsel,

Pursuant to the below, Apple is available at the following times on Thursday for the teleconference with the ALJ:

- 9-10:30am ET
- 1:30-2:30pm ET
- 3:30-5pm ET

Please advise what works for Complainants. Please also advise if Complainants' dispute Apple's definition of "ground" set forth in its letter to the ALJ.

Regards,
Sarah

From: Jou, Edward <Edward.Jou@usitc.gov>
Sent: Tuesday, April 26, 2022 9:30 AM
To: masimo.appleitc@knobbe.com; WH Apple-Masimo 1276 Service List <WHApple-Masimo1276ServiceList@wilmerhale.com>
Cc: Bhattacharyya337 <Bhattacharyya337@usitc.gov>
Subject: Inv. No. 337-TA-1276: Teleconference re Claim Narrowing

MASIMO 2042
Apple v. Masimo
IPR2024-00241

EXTERNAL SENDER

Counsel,

Please confer with each other to identify a convenient time for a teleconference with the Judge on Thursday, April 28th.

At the teleconference, the parties should be prepared to discuss the issues raised in your letters. The parties should also confer to determine whether there is any dispute regarding the definition of a prior art "ground" that is referenced in Respondents' letter. The parties should be generally prepared to discuss any other proposals to streamline the issues that need to be addressed at the hearing.

Regards,
-Ted

Ted Jou, Attorney-Advisor to Judge Bhattacharyya
U.S. International Trade Commission
500 E Street SW, Washington, DC 20436
(202) 205-3316 | edward.jou@usitc.gov

From: Chase, Lanta <Lanta.Chase@wilmerhale.com>
Sent: Friday, April 22, 2022 5:11 PM
To: Bhattacharyya337 <Bhattacharyya337@usitc.gov>; Jou, Edward <Edward.Jou@usitc.gov>; Maas, Michael W. <Michael.Maas@usitc.gov>; masimo.appleitc@knobbe.com
Cc: WH Apple-Masimo 1276 Service List <WHApple-Masimo1276ServiceList@wilmerhale.com>
Subject: Inv. No. 337-TA-1276: Apple Brief re Claim Narrowing

Judge Bhattacharyya,

Attached is Apple's brief regarding claim narrowing.

Regards,
Lanta

MASIMO 2042
Apple v. Masimo
IPR2024-00241

Lanta M. Chase | WilmerHale
IP Litigation Case Manager
1875 Pennsylvania Avenue NW
Washington, DC 20006 USA
+1 202 247 4229 (t)
+1 202 663 6363 (f)
lanta.chase@wilmerhale.com

Please consider the environment before printing this email.

This email message and any attachments are being sent by Wilmer Cutler Pickering Hale and Dorr LLP, are confidential, and may be privileged. If you are not the intended recipient, please notify us immediately—by replying to this message or by sending an email to postmaster@wilmerhale.com—and destroy all copies of this message and any attachments. Thank you.

For more information about WilmerHale, please visit us at http://www.wilmerhale.com.

NOTICE: This email message is for the sole use of the intended recipient(s) and may contain confidential and privileged information. Any unauthorized review, use, disclosure or distribution is prohibited. If you are not the intended recipient, please contact the sender by reply email and destroy all copies of the original message.

NOTICE: This email message is for the sole use of the intended recipient(s) and may contain confidential and privileged information. Any unauthorized review, use, disclosure or distribution is prohibited. If you are not the intended recipient, please contact the sender by reply email and destroy all copies of the original message.

NOTICE: This email message is for the sole use of the intended recipient(s) and may contain confidential and privileged information. Any unauthorized review, use, disclosure or distribution is prohibited. If you are not the intended recipient, please contact the sender by reply email and destroy all copies of the original message.

NOTICE: This email message is for the sole use of the intended recipient(s) and may contain confidential and privileged information. Any unauthorized review, use, disclosure or distribution is prohibited. If you are not the intended recipient, please contact the sender by reply email and destroy all copies of the original message.

NOTICE: This email message is for the sole use of the intended recipient(s) and may contain confidential and privileged information. Any unauthorized review, use, disclosure or distribution is prohibited. If you are not the intended recipient, please contact the sender by reply email and destroy all copies of the original message.

NOTICE: This email message is for the sole use of the intended recipient(s) and may contain confidential and privileged information. Any unauthorized review, use, disclosure or distribution is prohibited. If you are not the intended recipient, please contact the sender by reply email and destroy all copies of the original message.

NOTICE: This email message is for the sole use of the intended recipient(s) and may contain confidential and privileged information. Any unauthorized review, use, disclosure or distribution is prohibited. If you are not the intended recipient, please contact the sender by reply email and destroy all copies of the original message.

NOTICE: This email message is for the sole use of the intended recipient(s) and may contain confidential and privileged information. Any unauthorized review, use, disclosure or distribution is prohibited. If you are not the intended recipient, please contact the sender by reply email and destroy all copies of the original message.

APPENDIX B

Douglas.Wentzel

From: Deol, Ravi <Ravi.Deol@wilmerhale.com>
Sent: Wednesday, June 15, 2022 1:27 PM
To: Kendall.Loebbaka; WH Apple-Masimo 1276 Service List; Masimo.AppleITC
Subject: RE: ITC No 337-TA-1276 | Warren Testimony

Kendall,

We disagree that there were any inconsistencies between Dr. Warren's testimony and his reports, and also disagree with your characterization of the record.

For Masimo's first objection (1217:24-1220:11), we agreed to substitute the trial testimony for the relevant portion of the report, to expedite resolution of the issue and proceed with the testimony. We remain amenable to substituting Paragraph 244 from Dr. Warren's opening report for his testimony at 1217:11-21.

For Masimo's second objection (1243:5-1244:10), we agreed to meet and confer on Masimo's objection, but expressed our strong belief that the testimony was consistent with the reports. *See, e.g.,* Warren Op. ¶¶ 244, 489, 721, 1802-1806; Warren Reb. ¶ 37. We continue to believe that the testimony is fully consistent with the reports. To the extent you believe there are any inconsistencies, please identify them.

Apple also confirms that it has withdrawn its obviousness combinations based on Kansas State 6D for the Poeze patents. Apple continues to rely on the Kansas State art, however, as indicative of the state of the art.

Best,

Ravi Deol | WilmerHale
+1 720 598 3459 (t)

From: Kendall.Loebbaka <Kendall.Loebbaka@knobbe.com>
Sent: Tuesday, June 14, 2022 8:38 PM
To: WH Apple-Masimo 1276 Service List <WHApple-Masimo1276ServiceList@wilmerhale.com>
Cc: Masimo.AppleITC <Masimo.AppleITC@knobbe.com>
Subject: ITC No 337-TA-1276 | Warren Testimony

EXTERNAL SENDER

Counsel,

MASIMO 2042
Apple v. Masimo
IPR2024-00241

During the direct examination of Dr. Warren, Masimo objected to testimony regarding Apple's development of the blood oxygen feature in the Apple Watch as outside the scope of his report. (Tr. (Warren) at 1217:7-1220:11 and 1243:5-1244:10.) The parties agreed that the testimony would be exactly what was in Dr. Warren's report. (*Id*. at 1220:3-8 and 1244:1-7.) We have prepared the attached redacted version of Dr. Warren's report with the paragraphs that Ms. Vreeland identified during the hearing. Please confirm that Apple agrees to submit this portion of Dr. Warren's report in lieu of his testimony at 1217:11-21 and 1243:9-16. Paragraph 244 from his report would replace his testimony at 1217:11-21 and Paragraphs 1802-1806 would replace his testimony at 1243:9-16. Please note that the excerpt from Dr. Warren's report is password protected. I will send a separate email with the password.

Please also confirm that Apple has withdrawn its invalidity Grounds 7-9 based on Kansas State 6D for the Poeze patents. We look forward to your prompt response.

Best regards,
Kendall

Kendall Loebbaka
Partner
949-721-7687 **Direct**
Knobbe Martens

NOTICE: This email message is for the sole use of the intended recipient(s) and may contain confidential and privileged information. Any unauthorized review, use, disclosure or distribution is prohibited. If you are not the intended recipient, please contact the sender by reply email and destroy all copies of the original message.

MASIMO 2042
Apple v. Masimo
IPR2024-00241

APPENDIX C

REF

MECHANICS OF PATENT CLAIM DRAFTING

John L. Landis

Practising Law Institute

MASIMO 2042
Apple v. Masimo
IPR2024-00241

MECHANICS OF PATENT CLAIM DRAFTING

(Second Edition)

MASIMO 2042
Apple v. Masimo
IPR2024-00241

MECHANICS OF PATENT CLAIM DRAFTING

Second Edition

Sixth Printing

John L. Landis
With the Collaboration of
John D. Kaufmann, Bryan W. Sheffield
and Myron Cohen

G1-0633
Practising Law Institute
New York City

MASIMO 2042
Apple v. Masimo
IPR2024-00241

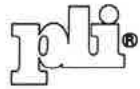

© November 1974 Practising Law Institute
Library of Congress Catalog Card Number: 74-77345

MASIMO 2042
Apple v. Masimo
IPR2024-00241

cases, see Sections 32 and 41 (computer programs). The key test is whether or not ". . . a person skilled in the art could make and use the invention without undue experimentation." *In re Scarbrough*, 182 USPQ 298 (CCPA 1974). In theory, this test applies equally well in all classes and types of inventions, mechanical, electrical, chemical; but the problems most frequently arise in complex electronic circuits, particularly block diagram, mean-type disclosures, and most particularly, disclosures concerned with computers.

SUMMARY—Have clear and unambiguous support in the detailed description for all words and phrases in the claim, so that anyone can understand how the claim reads on the description. Also, all structures described in the claim must be illustrated in the drawing, even old or conventional things.

Section 16—Naming the Elements

It is good practice to analyze the structure and select the essential elements to be claimed, with whatever scope is desired, before starting to write a claim. The elements must be assigned names, such as base, container, legs and oscillating means in Claim 1.

The exact name selected for each element is often not critical, as long as the claim drafter is not mistaken. While applicant in theory has the *Alice through the Looking Glass* privilege of making words mean what he wants them to mean, no term may be given a meaning repugnant to its usual meaning. This rule is often stated as "applicant may be his own lexicographer,"* but

---

**See, e.g., In re* Rohrbacker and Kolbe, 128 USPQ 117, 119 (CCPA 1960):

> Within reasonable limits an applicant is his own lexicographer and words used in his claims are to be interpreted in the sense . . . used in his specification. Kennicott v. Holt, 230 F. 717; and Wheeler Salvage Co. v. Rinelli, 295 F. 717.

See also Minneapolis Honeywell Regulator Co. v. Midwestern Instruments, 131 USPQ 402 (7th Cir. 1961).

MASIMO 2042
Apple v. Masimo
IPR2024-00241

within limits. Of course, the words used must have "clear support or antecedent basis" in the specification, as mentioned in Section 15. It is very important to make all parts of the specification consistent with the claims. When one wishes to impart a special meaning to a word or phrase appearing in the claims, he should define that word or phrase in the specification; for example "As used in this description and in the appended claims, the word '_____ _____' means _____." However, do not use ridiculous words such as "gizmo," "widget," or "dingle arm."

Frequently there are various expressions which could be used. For example, in Claim 1, the base could have been called "a support," "a mounting plate," or the like. The container might have been designated "a box" or "a holder."

In most cases, the inventor or a mechanical dictionary can supply the precise name for a part in any specific embodiment. Appendix C contains a glossary of many mechanical terms commonly used in patents. For the broader claims, a generic word is usually needed. If no concrete generic name is available, often a home-made name indicating the function of the part may be used, such as "a rotary member" or "a holder," together with as much description of the part and its function as is necessary. Also "means" clauses are often used to describe an element broadly (see Section 31). Where practical, it is best to give two similar but different elements distinct names, such as "a holding member" and "a support member." In other cases, this is not possible, in which case designations such as "first" or "second" should be used: "a first rotating member, . . . a second rotating member. . . ." Each element must always be described in such a distinctive manner as to clearly distinguish it from other similar or identical elements, as covered in Section 15.

SUMMARY—Select a clear-cut name for each element, based on the detailed specification description where given. Where a broad name is desired functional names such as "a fastener" or "means for moving . . ." should be used.

MASIMO 2042
Apple v. Masimo
IPR2024-00241

In the Matter of Certain Light-Based Physiological Measurement Devices and Components Thereof
Inv. No. 337-TA-1276

CERTIFICATE OF SERVICE

The undersigned hereby certifies that on July 12, 2022, I caused copies of the foregoing document to be filed and served as indicated below:

Secretary – U.S. International Trade Commission	
The Honorable Lisa R. Barton Secretary to the Commission U.S. International Trade Commission 500 E Street, SW, Room 112 Washington, DC 20436	☑ Via Electronic Filing [EDIS]
Administrative Law Judge – U.S. International Trade Commission	
The Honorable Monica Bhattacharyya U.S. International Trade Commission 500 E Street, S.W., Room 317 Washington, D.C. 20436	☑ Via E-mail to edward.jou@usitc.gov; michael.maas@usitc.gov; and Bhattacharyya337@usitc.gov
Counsel for Respondent Apple, Inc.	
Michael Esch David Cavanaugh **WILMER CUTLER PICKERING HALE AND DORR LLP** 1875 Pennsylvania Avenue, NW Washington, DC 20006 Mark Selwyn **WILMER CUTLER PICKERING HALE AND DORR LLP** 2600 El Camino Real Suite 400 Palo Alto, California 94306 Joseph Mueller Richard Goldenberg Sarah Frazier **WILMER CUTLER PICKERING HALE AND DORR LLP** 60 State Street Boston, Massachusetts 02109	☑ Via E-mail to WHApple-Masimo1276ServiceList@wilmerhale.com

MASIMO 2042
Apple v. Masimo
IPR2024-00241

July 12, 2022

/s/ *Claire A. Stoneman*
Claire A. Stoneman
Litigation Paralegal
Knobbe, Martens, Olson & Bear, LLP

MASIMO 2042
Apple v. Masimo
IPR2024-00241