[redacted]

[Public Version]

UNITED STATES PATENT AND TRADEMARK OFFICE

BEFORE THE PATENT TRIAL AND APPEAL BOARD

APPLE INC.,

Petitioner,

v.

MASIMO CORPORATION,

Patent Owner.

IPR2022-01291, IPR2022-01465
U.S. Patent 10,687,745

DECLARATION OF R. JAMES DUCKWORTH IN SUPPORT OF PATENT OWNER'S SUR-REPLY

I declare that all statements made herein on my own knowledge are true and that all statements made on information and belief are believed to be true, and further, that these statements were made with the knowledge that willful false statements and the like so made are punishable by fine or imprisonment, or both, under Section 1001 of Title 18 of the United States Code.

I reserve the right to supplement my opinions in the future to respond to any arguments or positions Apple may raise, taking account of new information as it becomes available to me.

Dated: 10/2/2023

R. James Duckworth, Ph.D.

MASIMO 2122
Apple v. Masimo
IPR2024-00241

TABLE OF CONTENTS

I. INTRODUCTION 1

II. MATERIALS CONSIDERED 2

III. LEVEL OF ORDINARY SKILL 5

IV. CLAIM CONSTRUCTION 5

A. "determine a physiological parameter … wherein the physiological parameter comprises oxygen saturation" (Claims 9, 18) 5

B. "plurality of photodiodes are arranged in an array having a spatial configuration corresponding to a shape of the portion of the tissue measurement site encircled by the light block" (Claim 15) 8

V. THE IWAMIYA+SARANTOS GROUNDS DO NOT SHOW OBVIOUSNESS 9

A. A POSITA Would Not Have Been Motivated to Add a Dark-Colored Coating to Iwamiya's Light Shielding Frame 18 9

B. A POSITA Would Not Have Modified Iwamiya with the Six Photodetector Arrangement Shown in the Reply 22

C. Apple's Reply Tries to Fix the Inoperable Iwamiya+Sarantos Combination by Making New Changes Contrary to Iwamiya's Teachings 29

D. Anthony's Multiple Different Theories about Claim 25 Show the Combination Does Not Satisfy the Limitation 34

MASIMO 2122
Apple v. Masimo
IPR2024-00241

VI. THE SARANTOS+SHIE GROUNDS DO NOT SHOW OBVIOUSNESS 36

A. Shie Has Nothing to Do with Physiological Monitoring 36

B. A POSITA Would Not Have Been Motivated to Combine Sarantos and Shie 40

C. There Is No Reasonable Expectation of Success for Apple's New Combination of Sarantos and Shie 48

D. Sarantos' Figures 22 and 25 Are Distinct Embodiments and Apple Presented New Theories Combining Those Two Embodiments (Limitations [15.3] and [15.4]) 50

VII. NO REASONABLE EXPECTATION OF SUCCESS IN DETERMINING OXYGEN SATURATION AT THE WRIST 54

A. The New References Do Not Show a Reasonable Expectation of Success, but Rather a Long-Felt but Unmet Need for Determining Oxygen Saturation at the Wrist 54

B. The Testimony of Apple's Engineers at the Relevant Time Shows that There Was No Reasonable Expectation of Success 68

MASIMO 2122
Apple v. Masimo
IPR2024-00241

I, R. James Duckworth, declare and state as follows:

I. INTRODUCTION

1. My name is R. James Duckworth, Ph.D. I have been retained by Knobbe, Martens, Olson & Bear, LLP, counsel for Patent Owner Masimo Corporation ("Masimo").

2. I am providing this declaration in response to Apple's Petitioner's Reply, the supplemental expert declaration of Apple's expert, Dr. Brian Anthony (EX1042) and the new exhibits that Apple submitted with its Reply (EX1043-EX1058, EX1060-EX1080) in IPR2022-01291 and IPR2022-01465.

3. I previously submitted three declarations in IPR2022-01291 and IPR2022-01465, namely, EX2002 in IPR2022-01291, EX2002 in IPR2022-01465, and EX2070 in both IPRs. I will maintain the same naming convention as used in the EX2070 declaration (e.g., EX2002 in IPR2022-01291 is EX2002-1291). My analysis in this declaration applies to both the 1291 Reply and 1465 Reply.

4. I am continuing to apply the legal standards provided to me by counsel as set forth in my original declarations. For reference, the legal standards that were set forth in my original declaration, EX2002-1291, have been included as Appendix A to this declaration.

MASIMO 2122
Apple v. Masimo
IPR2024-00241

[redacted]

II. MATERIALS CONSIDERED

5. In addition to the materials I previously identified in my earlier declarations, I have also reviewed and considered Patent Owner's Responses in both IPRs, Petitioner's Replies in both IPRs, and the new exhibits EX1042-EX1080, and any materials cited herein. I have also reviewed the transcript of the September 15, 2023 cross-examination of Dr. Anthony (EX2101). For reference, Apple's new exhibits EX1042-1080 are:

EX1042	CONFIDENTIAL Supplemental Declaration of Dr. Anthony
EX1043	The American Heritage Dictionary of the English Language, Fifth Edition, Houghton Mifflin Harcourt Publishing Company (2011)
EX1044	Collins Dictionary, HarperCollins Publishers (2010)
EX1045	Merriam-Webster's Collegiate Dictionary, Eleventh Edition, Merriam-Webster, Incorporated (2014)
EX1046	Bronzino, The Biomedical Engineering Handbook, CRC Press, Inc. (1995)
EX1047	U.S. Patent No. 6,014,576 to Raley
EX1048	Severinghaus et al., Recent Developments in Pulse Oximetry, Anesthesiology, Vol. 76, No. 6 (June 1992)
EX1049	Duffy, MIO Alpha BLE Review, PC Magazine (Jan. 28, 2013) (https://www.pcmag.com/reviews/mio-alpha-ble)

[redacted]

EX1050	Pang et al., A Neo-Reflective Wrist Pulse Oximeter, IEEE Access, Volume 2 (January 12, 2015)
EX1051	Li et al., A Wireless Reflectance Pulse Oximeter With Digital Baseline Control for Unfiltered Photoplethysmograms, IEEE Transactions on Biomedical Circuits and Systems, Vol. 6, No. 3 (June 2012)
EX1052	U.S. Pat. App. Pub. 2006/0253010 to Brady et al.
EX1053	Cai et al., Implementation of a Wireless Pulse Oximeter Based on Wrist Band Sensor, 2010 3rd International Conference on Biomedical Engineering and Informatics (BMEI 2010)
EX1054	WO 2001/17421 to Lindberg et al.
EX1055	Maattala et al., Optimum Place for Measuring Pulse Oximeter Signal in Wireless Sensor-Belt or Wrist-Band, 2007 International Conference on Convergence Information Technology, IEEE (2007)
EX1056	Fontaine et al., Reflectance-Based Pulse Oximeter for the Chest and Wrist, Worchester Polytechnic Institute
EX1057	Stein, "Withings Pulse O2 review: Fitness band plus heart rate monitor checks blood oxygen, too," CNET.com (April 25, 2014), (https://www.cnet.com/reviews/withings-pulse-o2-review/)
EX1058	U.S. Patent No. 7,468,036 to Rulkov et al.
EX1059	CONFIDENTIAL – Transcript of the Deposition of Dr. R. James

[redacted]

	Duckworth (August 9, 2023)
EX1060	Mendelson et al., A Wearable Reflectance Pulse Oximeter for Remote Physiological Monitoring, Proceedings of the 28th IEEE EMBS Annual International Conference (Sept. 3, 2006)
EX1061	WO 2011/051888 to Ackermans et al.
EX1062	U.S. Pat. App. Pub. 2005/0116820 to Goldreich
EX1063	WO 2012/140559 to Shmueli et al.
EX1064	U.S. Patent No. 7,650,176 to Sarussi et al.
EX1065	U.S. Pat. App. Pub. 2002/0095092 to Kondo et al.
EX1066	U.S. Pat. App. Pub. 2015/0355604 to Fraser et al.
EX1067	U.S. Patent No. 6,580,086 to Schulz et al.
EX1068	U.S. Pat. App. Pub. 2013/0267854 to Johnson et al.
EX1069	Takatani et al., Optical Oximetry Sensors for Whole Blood and Tissue, IEEE Engineering in Medicine and Biology (June/July 1994)
EX1070	U.S. Patent No. 5,164,858 to Aguilera, Jr. et al.
EX1071	U.S. Pat. App. Pub. 2005/0267346 to Faber et al.
EX1072	U.S. Patent No. 9,316,495 to Suzuki et al.
EX1073	U.S. Pat. App. Pub. 2014/0051955 to Tiao et al.
EX1074	U.S. Pat. App. Pub. 2016/0058312 to Han et al.

[redacted]

EX1075	U.S. Pat. App. Pub. 2010/0261986 to Chin et al.
EX1076	Beam Shaping with Cylindrical Lenses, (https://www.newport.com/n/beam-shaping-with-cylindrical-lenses)
EX1077	Dickey, Laser Beam Shaping Theory and Techniques, Second Edition, Taylor & Francis Group, LLC (2014)
EX1078	Lee et al., Micro-LED Technologies and Applications, Information Display (June 2016)
EX1079	U.S. Patent No. 6,398,727 to Bui et al.
EX1080	U.S. Pat. App. Pub. 2014/0323829 to LeBoeuf et al.

III. LEVEL OF ORDINARY SKILL

6. I am continuing to apply the same definition of a POSITA as stated in my earlier declarations and as defined in the Petition.

IV. CLAIM CONSTRUCTION

A. "determine a physiological parameter … wherein the physiological parameter comprises oxygen saturation" (Claims 9, 18)

7. Claims 9 and 18 require that the physiological monitoring device determine oxygen saturation at the wrist. Claims 9 and 18, which depend from Claims 1 and 15, include Limitations [1.7] and [15.8], which recite "a processor configured to …. determine a physiological parameter of the user responsive to the outputted at least one signal," and Limitations [9] and [18], which recite "wherein

MASIMO 2122
Apple v. Masimo
IPR2024-00241

the physiological parameter comprises oxygen saturation." Apple's Petition never proposed a construction of this claim limitation, but its Reply and Anthony's supplemental declaration now propose a new and incorrect construction for this limitation. Apple and Anthony now argue in Reply that "the claims merely refer to 'determin[ing]' some unspecified oxygen saturation parameter at the wrist, which could be satisfied by far more rudimentary functions than that implemented on the Watch." 1291 Reply, 21; 1465 Reply, 19. Anthony elaborates that the "claims do not specify a required accuracy or quality of its oxygen saturation measurements" and that "the oxygen saturation parameter might not even need to be a measurement." EX1042, ¶41. Instead, he argues that the claim could be satisfied by "a binary indication of whether a signal sufficient for measuring oxygen saturation has been obtained or an indication that oxygen saturation above a defined level of range had been detected." EX1042, ¶41.

8. Apple's and Anthony's new construction is incorrect. A POSITA reading the claim limitation would understand "determine a physiological parameter … wherein the physiological parameter comprises oxygen saturation" to require calculating the user's oxygen saturation. The specification explains that a processor "receives the transmitted signal indicative of the detected light and [] determine[s], based on an amount of absorption … arterial oxygen saturation … in the tissue measurement site." EX1001, 2:66-3:4; *see also id.* at 13:37-40 ("the

MASIMO 2122
Apple v. Masimo
IPR2024-00241

[redacted]

signal processor 810 includes processing logic that determines measurements for desired analytes based on the signals received from the detector 806."). The specification also describes a "method to determine a constituent or analyte in a patient's blood" includes numerous steps, including "receiving, by a processor, the transmitted signal responsive to the detected light," and then culminating in the final step of "processing, by the processor, the received signal responsive to the detected light to ***determine a physiological parameter***." *Id.* at 3:46-61 (emphasis added). Thus, the specification informs a POSITA that merely obtaining "a signal sufficient for measuring oxygen saturation" or an indication that such a signal was obtained is not enough—the claims require the final step of calculating the oxygen saturation. The specification is consistent with the claim language, which a POSITA would understand to mean that the physiological monitoring device calculates the user's oxygen saturation.

9. A POSITA would not understand a "binary indication of whether a signal sufficient for measuring oxygen saturation has been obtained" to satisfy the plain and ordinary meaning of "determine a physiological parameter." A binary indication of sufficient signal does not actually determine a user's oxygen saturation value. Ensuring a "sufficient signal" is merely one step in the process of determining oxygen saturation.

MASIMO 2122
Apple v. Masimo
IPR2024-00241

[redacted]

10. Anthony agreed during his deposition that the claims require a calculation of oxygen saturation. EX2101, 69:4-9. Thus, both Dr. Anthony and I agree that the claims require that the physiological monitoring device actually calculates the user's oxygen saturation value.

B. "plurality of photodiodes are arranged in an array having a spatial configuration <u>corresponding</u> to a shape of the portion of the tissue measurement site encircled by the light block" (Claim 15)

11. Apple and Anthony also argue that the term "'correspond' also has broader meanings than those represented by the applicant to the Office during prosecution" and rely on three definitions from general-purpose dictionaries. 1291 Reply, 10-11; 1465 Reply, 8-9; EX1042, ¶19; EX1043-EX1045 (dictionaries). However, I understand that a proper claim construction analysis first looks to the intrinsic evidence, which includes the patent specification and the prosecution history. As I explained previously, the Applicant explained in the parent prosecution that the claim limitation requires "a sufficient number of detectors such that, when arranged together in an array, can 'match,' 'have a close similarity,' or 'represent' the 'at least partially circular shape' of the irradiated portion of the tissue measurement site," and provided examples about an analogous limitation. EX2057, 322; EX2070, ¶67; EX2002-1291, ¶¶ 47-48; EX2002-1465, ¶¶47-49. The Applicant's definition in the prosecution history informs the meaning of the claim term. In my opinion, Apple and Anthony disregarded the

MASIMO 2122
Apple v. Masimo
IPR2024-00241

[redacted]

prosecution history and thus did not apply the correct construction to their analyses.

V. THE IWAMIYA+SARANTOS GROUNDS DO NOT SHOW OBVIOUSNESS

A. A POSITA Would Not Have Been Motivated to Add a Dark-Colored Coating to Iwamiya's Light Shielding Frame 18

12. Apple argues in Reply that a POSITA would have added a dark-colored coating to Iwamiya's light shielding frame 18 because "Iwamiya left the selection of a suitable material for frame 18 to a POSITA" and that it would have been a "design choice." 1291 Reply, 3, 5; 1465 Reply, 2, 3. I disagree for at least the reasons below.

13. Apple disagrees with my analysis explaining why a POSITA would be led by Iwamiya to select a reflective rather than absorptive material for use on the light-shielding frame 18. 1291 Reply, 6; 1465 Reply, 4. However, as I explained previously, Iwamiya expressly teaches multiple times throughout its specification that "light shielding" should be accomplished with reflective materials. EX2070, ¶¶59-60; EX2002-1291, ¶¶96-98; EX2002-1465, ¶¶75-77. For example, Iwamiya states:

> [T]he holder portion 43 of the light receiving unit 33 is formed of a metal with a ***light shielding property***, such as aluminum, and its surface is subjected to alumite treatment ***to have a reflection***

MASIMO 2122
Apple v. Masimo
IPR2024-00241

> ***function***. Thereby, the light receiving element 33a can be optically protected.

EX1004, 18:61-65; *see also id.* at 28:64-29:1, 39:20-24. Iwamiya thus specifically teaches a material with a "light shielding property," namely a metal that can be subjected to a reflective treatment. I understand that Apple has argued that this teaching should be limited to "holder portion 43" only. But a POSITA would have understood that Iwamiya's disclosure of material with a light shielding property could apply to any light shielding feature, not just "holder portion 43." Thus, as I explained previously, a POSITA would have understood that this teaching about a metal with a light shielding property would apply to the light shielding frame 18. The use of the same language, "light shielding," expressly links them together. Furthermore, holder portion 43 in Iwamiya's other embodiment is an analogous structure that performs the same functions as the light shielding frame 18. The annotated diagrams below are from my original declaration, EX2002-1291, showing why a POSITA would understand the light shielding frame 18 and holder portion 43 to be analogous to each other.

[redacted]

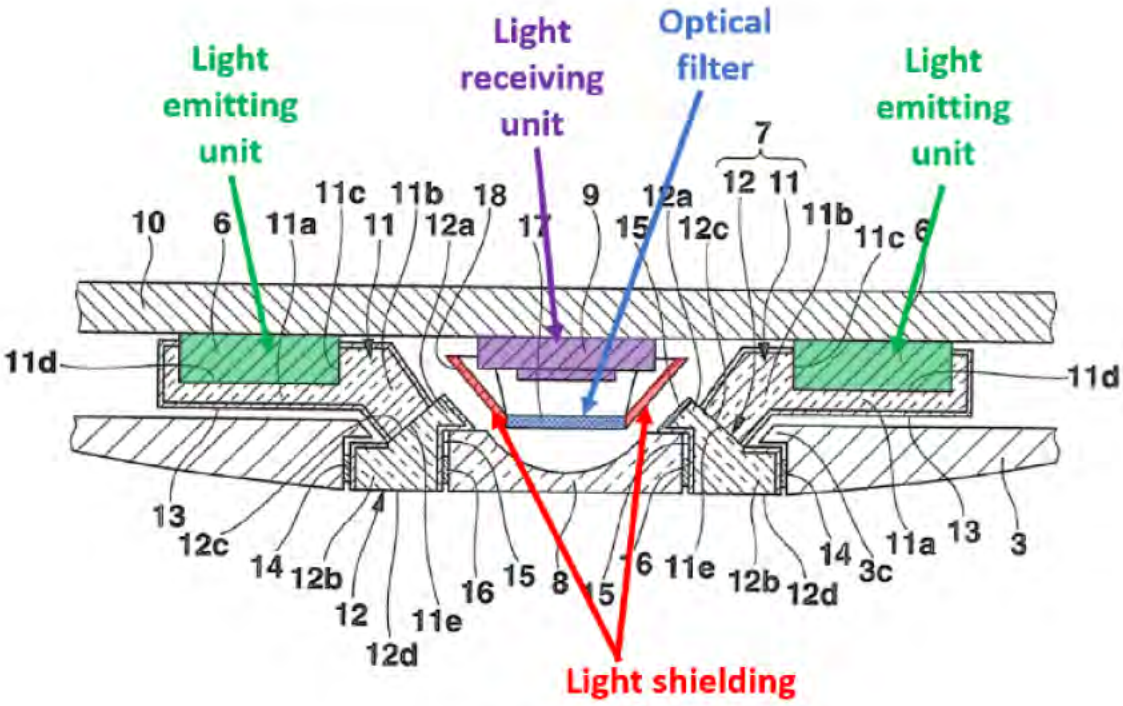

FIG.3

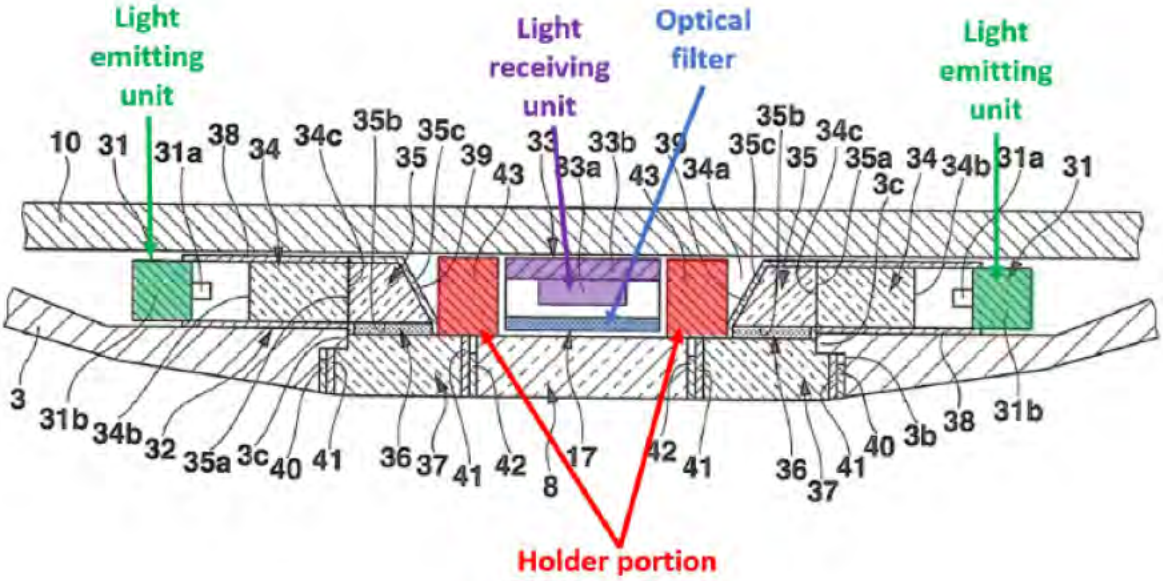

FIG.13

EX2002-1291, ¶97 (annotating EX1004, Figs. 3, 13). In view of the teachings throughout Iwamiya that "light shielding" materials are reflective, a POSITA

[redacted]

would have understood that the light shielding frame 18 is also made, or should be made, with a reflective material. There would have been no reason for a POSITA to ignore those repeated teachings. This suggests to me that hindsight analysis based on the '745 Patent claims motivated the combination rather than any teaching in the alleged prior art.

14. Apple also argues in Reply that I did not acknowledge that the light shielding frame 18 and holder portion 43 are in different embodiments with different structures. But that criticism, even if it were somehow correct, does not account for the specification's teaching that the "light shielding property" is formed of a metal with reflective treatment. And the criticism is not correct. My original declarations (EX2002 in both IPRs) acknowledged that these structures are in different embodiments, explained why a POSITA would have understood them to be analogous structures and applied the teachings regarding holder portion 43 to the light shielding frame 18. EX2002-1291, ¶¶96-98; EX2002-1465, ¶¶75-77. That analysis never changed in my most recent declaration (EX2070). EX2070, ¶¶59-60.

15. Apple argues in Reply that the reflective layers 13 and 15 serve different functions than the light shielding frame 18. 1291 Reply, 6-7; 1465 Reply, 4-5. But reflective layers 13 and 15 block light from going directly from the LED to the photodetector without passing through the user's tissue. The light shielding

MASIMO 2122
Apple v. Masimo
IPR2024-00241

[redacted]

frame 18 also blocks light from reaching the photodetector without first passing through the optical filter 17. As I explained in my prior declaration, ***every time*** Iwamiya discusses the need to block light, it is done with a reflective material. EX2070, ¶¶59-60. Iwamiya repeatedly teaches that the "light shielding property" is formed of a metal with reflective treatment that results in a feature being "optically protected." EX1004 at 18:61-65, 28:64-29:1; 39:20-25. Iwamiya thus teaches analogous structures in other embodiments like the holder portion 43, as well as other structures also designed to block light, are made from reflective materials. EX1004 at 18:61-65, 28:64-29:1; 39:20-25; *see also* Iwamiya's discussion of reflection layers 13 and 15 (6:62-7:3, 7:41-49). Apple's and Anthony's analysis about so-called "different functions" does not actually address those teachings in Iwamiya.

16. Apple's Reply argues that "dark-colored coatings for light shielding as taught in Sarantos was a common practice well before the '745 Patent." 1291 Reply, 4; 1465 Reply, 2. Apple and Anthony cite Sarantos (EX1005), Webster (EX1013), and a new reference, Schulz (EX1067), to argue that "dark-colored coatings" were "common practice." 1291 Reply, 4; 1465 Reply, 2; EX1042, ¶7. But none of the cited references apply a dark-colored coating to a structure that even remotely resembles the light shielding frame 18 and optical filter 17 structure that is in Iwamiya. Iwamiya has a specific structure unlike those in the cited

[redacted]

references. In Iwamiya, the light receiving unit (photodetector) 9 is recessed inside a cavity (highlighted yellow below). *See* EX1004, Fig. 4 (annotated below). Within the cavity, a light shielding frame 18 holds an optical filter 17 in front of the photodetector. *See* EX1004, 8:38-42; Fig. 4.

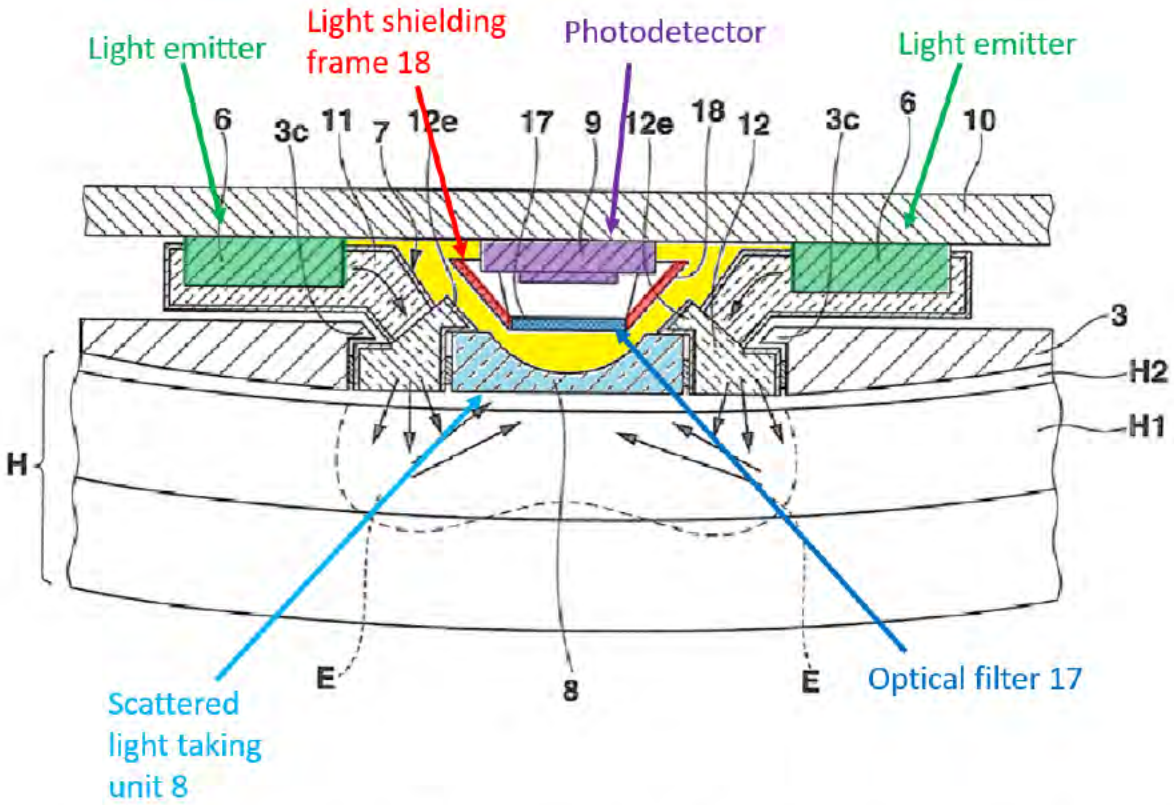

EX1004, Fig. 4 (annotated). As shown above, light inside the cavity (highlighted yellow) has already passed through the tissue and through the scattered light taking unit 8. In contrast, none of the other references Apple cited have an analogous structure to Iwamiya's light shielding frame or use a dark-colored coating on such a structure. Sarantos, for example, uses a dark-colored in-mold label to create window regions in a transparent material that contacts the user's skin. EX1005,

[redacted]

17:1-25, Fig. 22. The most similar structure in Iwamiya would be the "scattered light taking unit 8." Sarantos does not have any structure like Iwamiya's light shielding frame 18. Neither Apple nor Anthony provide any rationale for applying the Sarantos "in-mold label" to an internal component in Iwamiya that is behind the scattered light taking unit 8. Iwamiya also already has an optical filter. Thus, a POSITA would have no reason to take Sarantos' disclosure regarding the in-mold label and apply it to Iwamiya's light shielding frame 18.

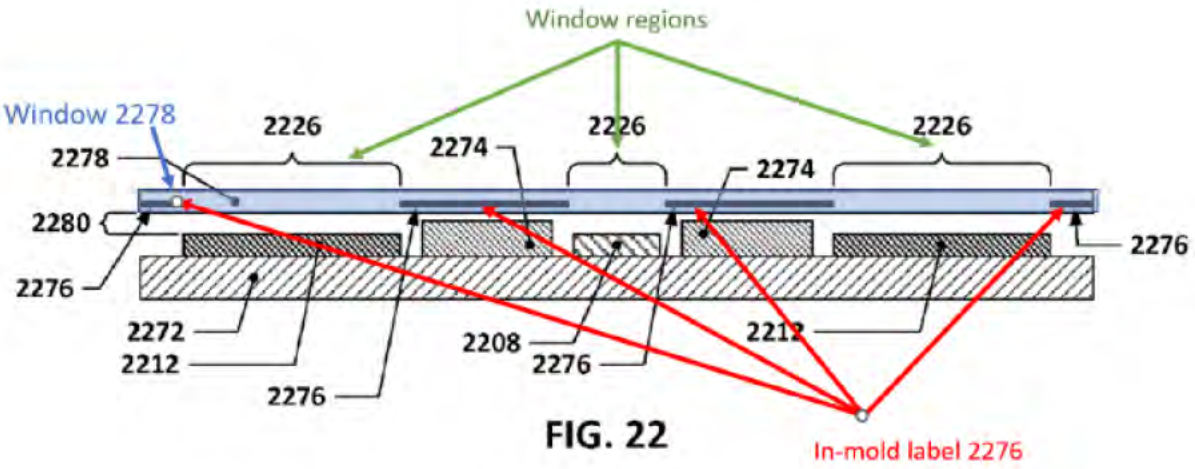

FIG. 22

EX1005, Fig. 22 (annotated). Webster (EX1013) at 96-97 and 111 likewise does not discuss a structure remotely similar to Iwamiya's light shielding frame. Schulz (EX1067) also does not remotely resemble Iwamiya. Schulz depicts a sensor and coats the exterior surfaces of the sensor with a light absorbing material. EX1067, 9:58-10:23, Figs. 2A-2C.

[redacted]

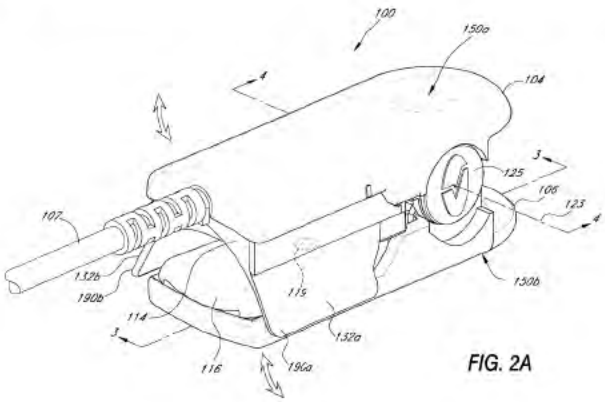

FIG. 2A

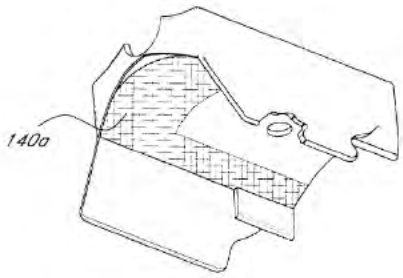

FIG. 2B

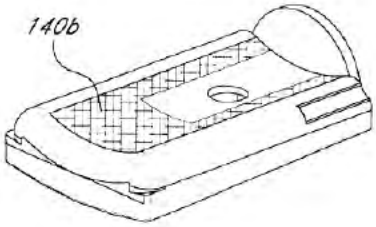

FIG. 2C

EX1067, Figs. 2A-2C. Notably, while Apple and Anthony cited EX1067 at 9:58-10:23, the last sentence of that paragraph at 10:23-25 states, "In one embodiment, the elements 114 and 116 are ***white or reflective*** in the vicinity immediately surrounding the apertures 117, 119." EX1067, 10:23-25 (emphasis added), 7:56-62. Those apertures are for the LED and the photodiode. Thus, even Schulz (the reference cited by Apple and Anthony) teaches Iwamiya's filter-holder should be reflective, and not coated with a dark-colored, light-absorbing material as Apple and Anthony propose.

[redacted]

17. As I explained in my prior declaration, a POSITA would understand that Iwamiya's light shielding frame reflects light and prevents light from bypassing the optical filter. EX2070, ¶62. It also allows scattered light ***from the measurement site*** to be redirected towards the optical filter and eventually to the light receiving unit. *Id.* A POSITA would have understood that this funneling of scattered light that has passed through the light taking unit 8 (highlighted light blue below) and into the cavity (highlighted yellow below) back to the light receiving unit 9 (the photodetector, purple) would be desirable in the context of Iwamiya. Iwamiya describes detecting weak signals with various features specifically designed to avoid the absorption of light by melanin in the skin. A POSITA would have wanted as much of the scattered light from the tissue to reach the photodetector as possible. Using a dark-colored coating on the light shielding frame in Iwamiya would have eliminated that effect of funneling light back to the light receiving unit, and thus would reduce the strength of the received signal.

[redacted]

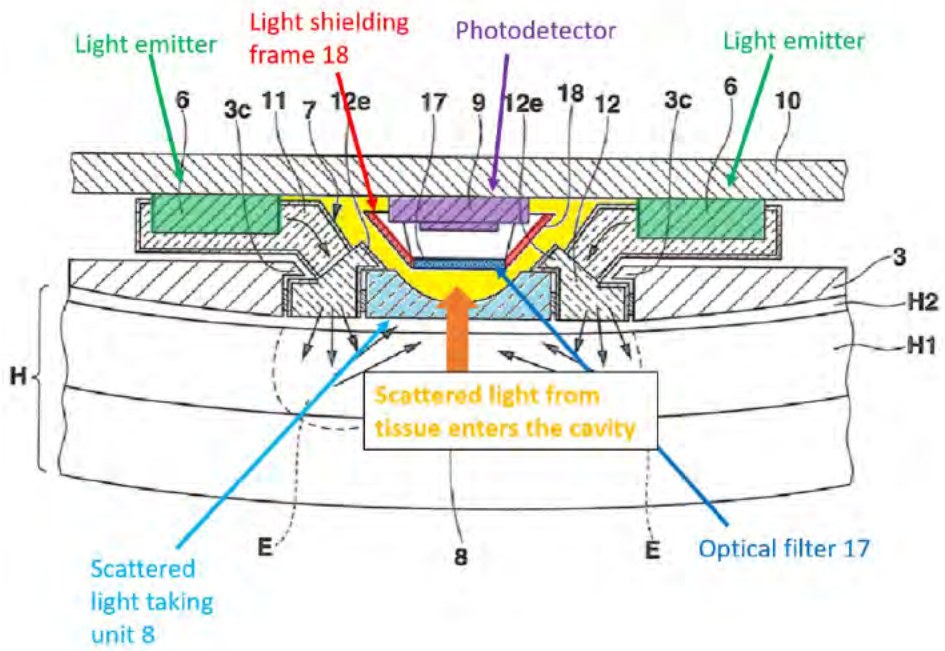

EX1004, Fig. 4 (annotated).

18. Contrary to Iwamiya's teachings to use reflective materials for light shielding purposes, Apple and Dr. Anthony argue that a dark-colored coating that absorbs light would be preferable because it would "***reduce reflections*** and light scatter in the empty space surrounding frame 18." 1291 Reply, 6 (citing EX1042, ¶¶9, 12); 1465 Reply, 4. Anthony argues that a "POSITA would have sought to reduce these effects since any light that reflected back from the space surrounding frame 18 and through the optical filter 17 to the photodiodes would have different path lengths that could increase optical interference and reduce measurement accuracy." EX1042, ¶9. Anthony also argues that having a reflective light shielding frame in the cavity in Iwamiya "introduces greater risk of multiple

[redacted]

scattering and pathlength variations not present in the embodiments that employ holder portion 43 (where no comparable cavity exists)." EX1042, ¶12.

19. Apple criticizes my declaration for not addressing a so-called pathlength issue. But Anthony's argument that the reflected light inside of the cavity would have different pathlengths that could increase optical interference is unsupported. Pathlength refers to the interaction of light and tissue, ***not*** light and empty space. Indeed, even the references Anthony relied upon explain that distinction. For example, Anthony cited Webster (EX1013) at PDF pages 69, and 96-97. But those portions do not discuss reflections within empty space (such as a sensor cavity) as a potential source of pathlength variation. Rather, page 96 of Webster discusses how the Beer-Lambert law does not perfectly explain the interaction of light and blood because the Beer-Lambert law "assumes no light scattering, which is not true ***in whole blood***." EX1013, 96. This part of Webster refers to scattering in ***tissue***. Pages 96-97 of Webster do not discuss pathlength variations at all. That section discusses optical interference caused by (1) ambient light, and (2) emitted light that bypasses the tissue. EX1013, 96. None of it describes light that has already passed through tissue. And the light in Iwamiya's cavity would have already passed through tissue and through the scattered light taking unit (8) before entering the cavity. There would be no further tissue for such light to interrogate. And none of the references Anthony cited support a

MASIMO 2122
Apple v. Masimo
IPR2024-00241

"pathlength" problem for light after it has already interacted with the user's tissue. Moreover, Iwamiya addresses both the issues described by Webster: (1) ambient light and (2) emitted light that bypasses the tissue. Iwamiya addresses ambient light with the optical filter 17 which filters out light below 900 nm and the problem of light bypassing tissue by using reflection layers 13 and 15 in the light guide unit to prevent the light from going directly from emitter to detector.

20. Anthony also cites Schulz (EX1067) at 1:65-2:16 and 9:58-10:23. It does not provide a POSITA with any reason to modify Iwamiya. Schulz at 1:65-2:16 discusses the problem where "light generated by the light source within the measuring device … which is not transmitted through or reflected by the body part under examination will also result in signal error if such light is received by the detector." EX1067, 2:8-11. Similarly, Schulz at 9:58-10:23 discusses using a light absorbing material on surface elements to eliminate undesirable light paths from the LED to the sensor. EX1067, 9:64-10:3 ("Specifically, light generated by the light source 103 can take several paths in reaching the detector, only one of which is the desired path via the aforementioned first and second apertures 117, 119 and through the interposed tissue material. Preferably, in order to obtain more accurate measurement of transmitted light intensity, these other paths are eliminated or attenuated."). As discussed above, Iwamiya's lightguide already includes features blocking such undesirable light. The light that enters Iwamiya's light collecting

MASIMO 2122
Apple v. Masimo
IPR2024-00241

[redacted]

unit 8 is either ambient light or light that has passed through the user's tissue and contains the desired signal. Iwamiya's filter removes ambient light, leaving only the light with the desired signal. There is no reason to discard a portion of this light, as Apple's proposed coating would do. Indeed, it would potentially absorb desirable light, which would be a detriment rather than a benefit. And as I noted above, Schulz itself describes using a "white or ***reflective coating***" in the "vicinity immediately surrounding the apertures" for the LED and photodetector. EX1067, 10:23-25.

21. Apple's and Anthony's arguments are also inconsistent. Apple suggests that a POSITA would be motivated to ***remove*** the optical filter 17 entirely from Iwamiya. 1291 Reply, 14; 1465 Reply, 12; EX1042, ¶25. But the optical filter 17 was designed to prevent external light from reaching the photodetector. EX1004, 8:38-47. Iwamiya's teachings include the optical filter 17 in ***every*** embodiment. EX1004, 8:38-47, 18:55-60, 28:56-63, 39:9-19. Apple presents no reason a POSITA would simultaneously remove a feature that Iwamiya specifically taught to reduce noise (the optical filter) yet add dark-colored coating supposedly to reduce noise.

22. Moreover, Apple's proposed modifications make no sense. The purpose of Iwamiya's light shielding frame is to mount the optical filter and ensure light passes through that filter. EX1004, 8:38-47. Apple presents no reason to

MASIMO 2122
Apple v. Masimo
IPR2024-00241

[redacted]

remove the optical filter yet keep the structure designed to mount that filter. The inconsistency in these arguments strongly suggests that Anthony relied on hindsight by working backwards from the '745 Patent claims to combine the prior art.

23. Finally, Apple and Anthony argue that "even if design tradeoffs exist between the selection of a dark-colored coating and a reflective material, these tradeoffs would only render each option obvious." 1291 Reply, 7; 1465 Reply, 5; EX1042, ¶14 ("the mere existence of design tradeoffs would not have detracted from the obviousness of using a dark-colored coating…"). However, a tradeoff typically results in some advantage to be gained in exchange for a disadvantage. But here, there is no benefit to using a dark-colored coating. Rather, as I explained above, such a coating would reduce the amount of light that has already passed through the tissue that can ultimately reach Iwamiya's photodetector, weakening the signal. A POSITA would not have considered a "tradeoff" to be something that only brings disadvantages without any attendant benefits. Here, there is no tradeoff. Accordingly, a POSITA would not have been motivated to modify Iwamiya's light shielding frame with a dark-colored coating.

B. A POSITA Would Not Have Modified Iwamiya with the Six Photodetector Arrangement Shown in the Reply

24. Apple's Reply and Anthony's supplemental declaration argue that a POSITA would have modified Iwamiya, which uses a single photodetector 9, to

[redacted]

instead use six smaller photodetectors arranged in a circular pattern as shown in Apple's annotated figure below:

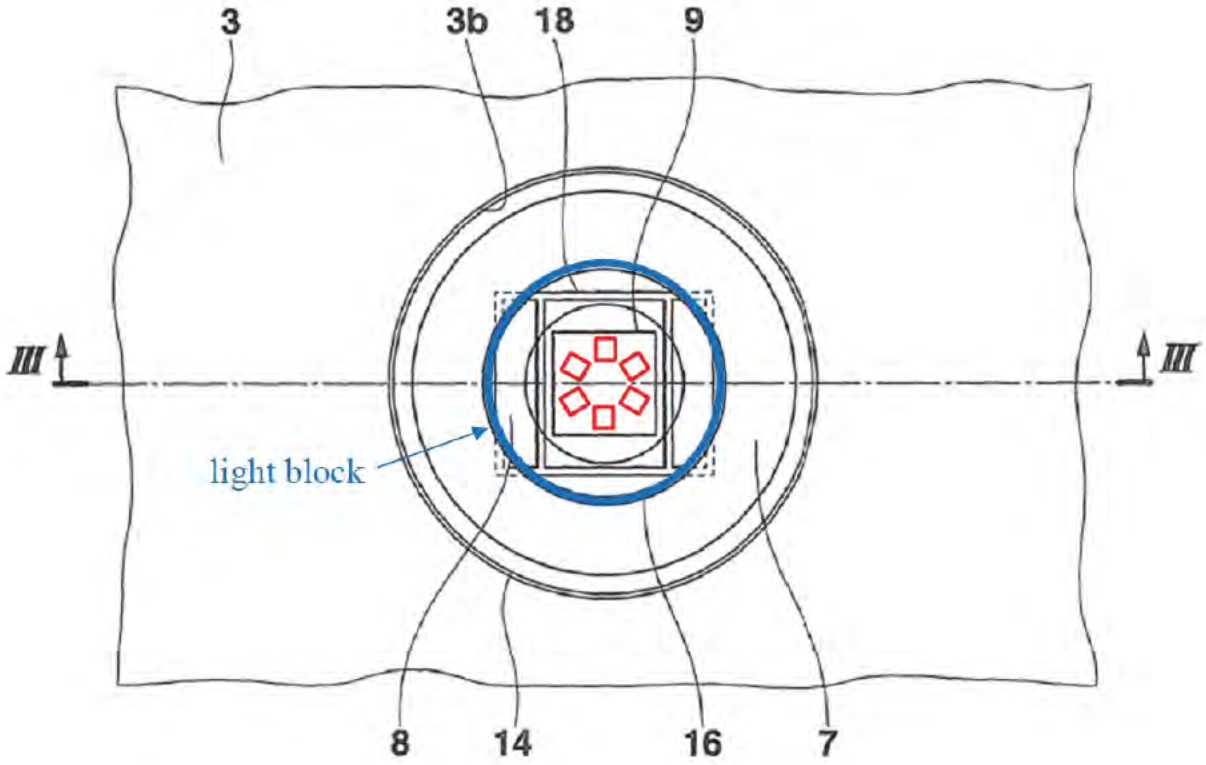

1291 Reply, 9 (Apple's annotations of Iwamiya's Fig. 2); 1465 Reply, 7; *see also* EX1042, ¶16.

25. But as I explained previously, this arrangement would leave a spot in the center of the photodetectors that is unable to detect any light. EX2070, ¶100. Apple's new illustration confirms my explanation by showing that the light detection area would be significantly decreased with Apple's proposed modification. The illustration below shows that there is a large empty spot without

[redacted]

light detection in the center of the six photodetectors. A POSITA would not have understood from Iwamiya's disclosure that such a modification would be desirable.

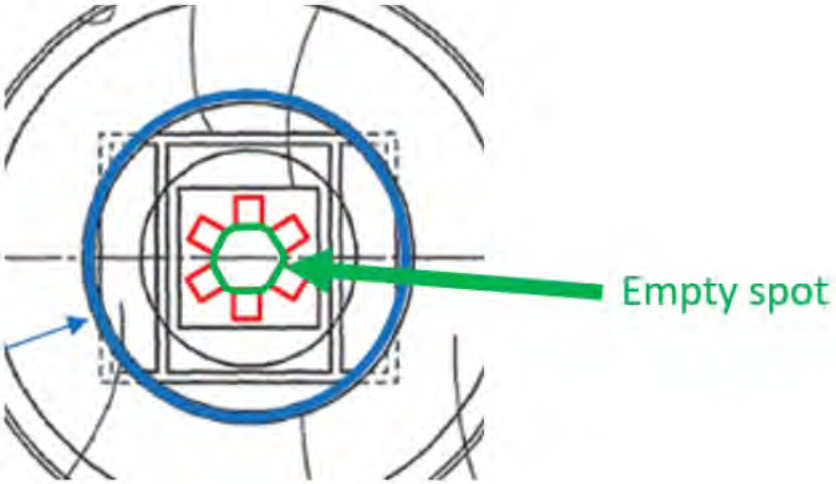

EX1004, Fig. 2 (annotated, including Apple's annotations in blue and red).

26. Anthony argues that this arrangement would have resulted in "increasing detection area, light sensitivity, and overall signal-to-noise ratio." EX1042, ¶17. Anthony's annotations to the figure show the flaw in this reasoning. The figure shows that the total amount of light detection area is less than half of its original area. It is impossible that such an arrangement would increase detection area, light sensitivity, or signal-to-noise ratio when. A POSITA would recognize this arrangement as being objectively ***worse*** in detection area, light sensitivity and signal-to-noise ratio. In the figures below, Iwamiya's original photodetector (left, highlighted green) is substantially larger than Apple's proposed modification of six photodiodes (middle, Apple's annotations). As shown on the right, Apple's

MASIMO 2122
Apple v. Masimo
IPR2024-00241

[redacted]

modification no longer covers the area of the original photodetector that is shown in orange. These images illustrate how a POSITA would understand the overall light detection area would be reduced significantly, by well over half. This would substantially decrease the ability of the sensor to detect light, and a POSITA would have found this particularly undesirable considering the already weak signals at the wrist.

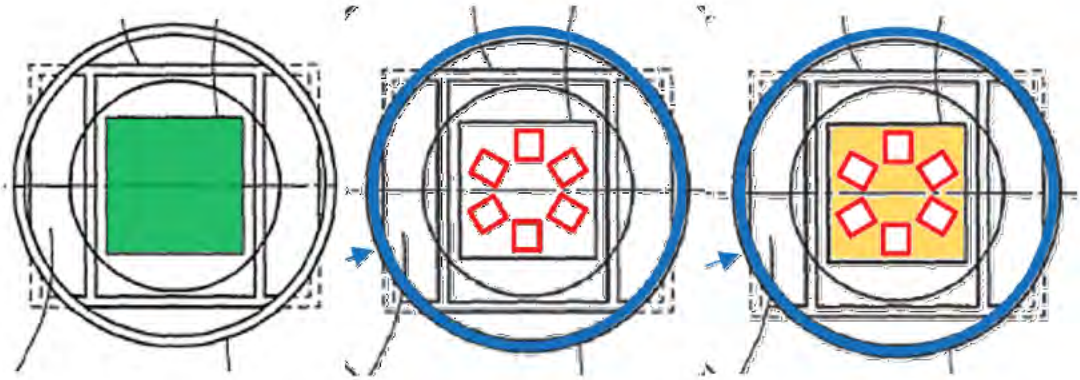

Left: EX1004, Fig. 2 (photodetector highlighted green); Middle: EX1042, ¶16 (Anthony's proposed six-photodetector arrangement); Right: My annotations on top of Anthony's annotations.

27. Anthony and Apple cite several references (including one I co-authored, EX1060) that discuss using a circular array of photodetectors. EX1042, ¶17 (citing Webster (EX1013), Mendelson (EX1008), Mendelson & Duckworth (EX1060), and Johnson (EX1068)); 1291 Reply, 9-10; 1465 Reply, 7-8. However, all those references discuss a sensor arrangement with a light ***emitter in the center*** of the photodetectors. This is ***opposite*** of Iwamiya's arrangement. In Iwamiya, the

MASIMO 2122
Apple v. Masimo
IPR2024-00241

[redacted]

photodetector is in the center of emitted light. In the references, the alleged benefits of a circular array of photodetectors are tied to the particular arrangement of photodetectors around light ***emitter in the center***, as shown below. EX1013, 107; EX1008, Fig. 7 (annotated below).

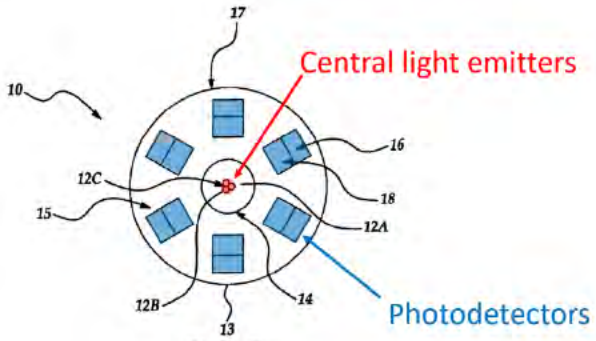

Figure 7

In contrast, using the proposed circular array of photodetectors makes no sense with Iwamiya because its photodetector is in the center. Iwamiya's Figure 4 shows how the light from the emitters 6 is directed towards the photodetector 9 in the center.

[redacted]

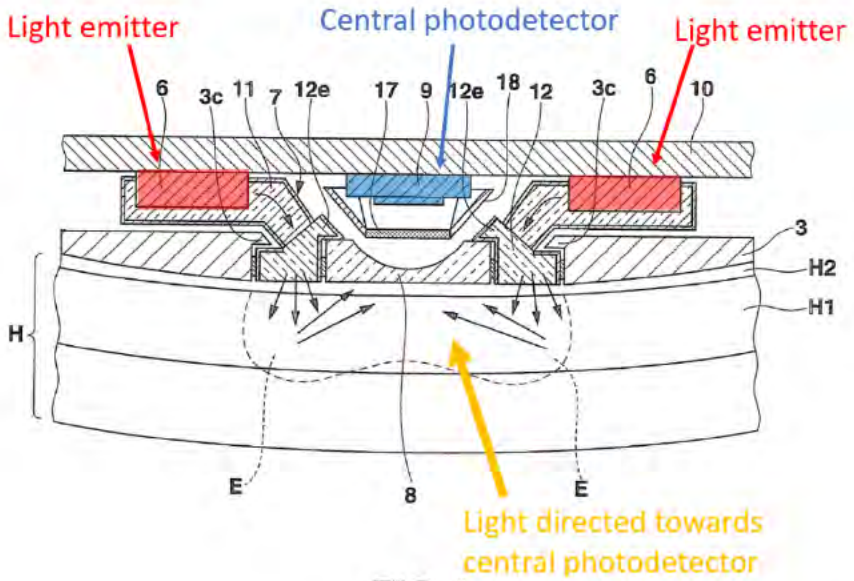

FIG.4

EX1004, Fig. 4 (original arrows in this figure show light path from emitter 6, through the user's tissue, and towards the photodetector 9). A POSITA would not understand a benefit to change Iwamiya to use a circular array of photodetectors. As explained above, that arrangement would significantly decrease the detected light.

28. As a reason to change Iwamiya's single detector into a circular array, Apple and Anthony rely on Iwamiya's discussion of "plural light receiving units 9 … two-dimensionally disposed … on the same circumference centered on an optical axis of the scattered light taking unit 8." EX1042, ¶16 (quoting EX1004, 14:36-41). But a POSITA would understand "circumference" to refer to the photodetectors' relative location, not a circular array of detectors. A POSITA would understand that describes using a plurality of smaller photodetectors to

[redacted]

cover the same area as the larger photodetector, for example, by using four smaller square photodetectors in place of the single larger photodetector. I have illustrated this below.

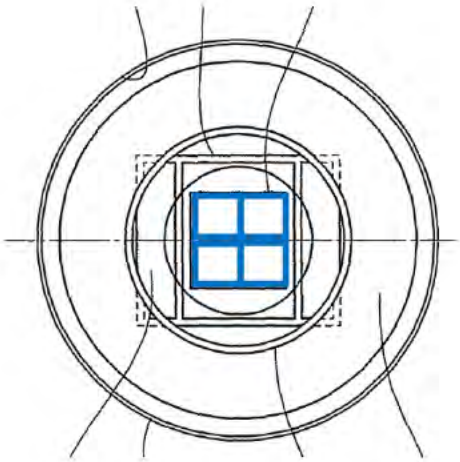

29. This arrangement is consistent with Iwamiya's description of "plural light receiving units 9 … disposed on the same circumference centered on an optical axis of the scattered light taking unit 8." Unlike Apple's and Anthony's proposal, it does not reduce the light detection area. There is no "tradeoff" to Apple's and Anthony's circular arrangement—only a substantially worse signal.

30. Apple also argues in Reply that "the specific number of photodiodes alleged to be required by the claims is not even a patentable distinction." 1291 Reply, 10; 1465 Reply, 8. But the claims do not recite a specific number of photodiodes. Rather, they require a specific arrangement of photodiodes, and the prosecution history explains how a particular arrangement for a circular shape can be made. However, as I explained above in Section IV.B, Apple and Anthony did

MASIMO 2122
Apple v. Masimo
IPR2024-00241

[redacted]

not apply the correct construction because they ignored the prosecution history in favor of general dictionary definitions of the term "correspond." The prosecution history informs a POSITA that six photodiodes are needed to be "arranged in an array having a spatial configuration corresponding to a shape of the portion of the tissue measurement site encircled by the light block," (which is circular), and that two or three photodetectors are not sufficient. *See* EX2057, 322; EX2070, ¶67; EX2002-1291, ¶¶ 47-48; EX2002-1465, ¶¶47-49. Iwamiya does not disclose such an arrangement and as explained above, a POSITA would not have modified Iwamiya as Apple and Anthony propose.

C. Apple's Reply Tries to Fix the Inoperable Iwamiya+Sarantos Combination by Making New Changes Contrary to Iwamiya's Teachings

31. Apple and Anthony do not contest that their original combination of Iwamiya and Sarantos would have been inoperable to support oxygen saturation measurements. Instead, they raise new arguments about how it would have been "obvious and straightforward" to further modify Iwamiya by adding red LEDs, changing the sensitivity of the photodetectors to accommodate red light, and changing or removing the optical filter entirely. 1291 Reply, 13-14; 1465 Reply, 12; EX1042, ¶¶24-25. But it was not so straightforward or obvious as Apple and Anthony suggest to support oxygen saturation measurements.

MASIMO 2122
Apple v. Masimo
IPR2024-00241

[redacted]

32. Apple argues that it would have been obvious to "augment [Iwamiya's] device with one or more LEDs emitting red light, e.g., by adding one or more red LEDs or replacing one of Iwamiya's two original infrared LEDs with a red LED." 1291 Reply, 13; 1465 Reply, 12. Anthony argues that it could have been done multiple ways, including as the two illustrations from his declaration below, and that a "POSITA would have considered the specific placement of the red LED(s) relative to the infrared LED(s) to be a design choice." EX1042, ¶25.

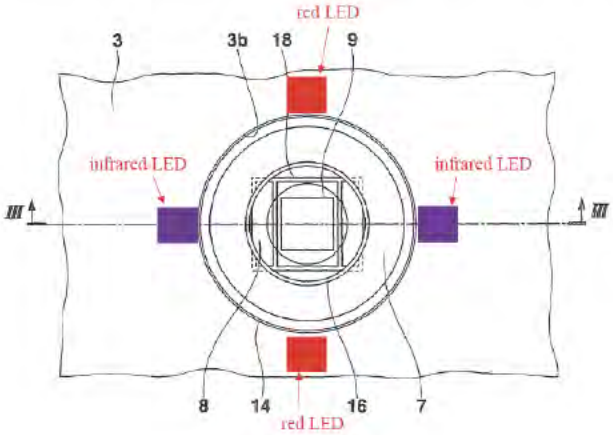

FIG.2

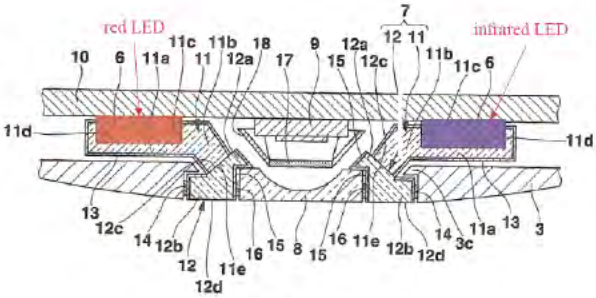

FIG.3

EX1042, ¶25 (Anthony's annotations of EX1004, Figs. 2 and 3). But this was not a mere "design choice." A POSITA would understand the modifications to Iwamiya that Anthony presented above would create signal problems because the red and infrared LEDs are not in the same location. Indeed, Anthony's proposals above show the red and IR LEDs placed as far apart as possible. The light from the red LEDs would travel through a very different path and through different tissue than the infrared light. The red and infrared light would not be interrogating

MASIMO 2122
Apple v. Masimo
IPR2024-00241

the same tissue, rendering the signals unsuitable for determining oxygen saturation. Anthony does not address this problem whatsoever and seems unaware of this basic requirement of LED placement in pulse oximeters. . *See* EX2079, 836:3-16, 838:4-25, 845:7-16.

33. Anthony cites a statement in Sarantos that multiple LEDs "may[] … be spaced apart from one another" and leaps to the conclusion that somehow suggests that "the red and infrared LEDs can be located near each other or in different locations, so long as each set of LEDs adequately illuminates the measurement site as they would in Iwamiya." EX1042, ¶25 (citing EX1005, 13:34-36). But that conclusion would not apply to pulse oximetry. As explained above, for pulse oximetry it is imperative that the red and infrared light travel through as close to the same path as possible through the tissue.

34. Moreover, Apple's and Anthony's proposed changes to Iwamiya are directly contrary to Iwamiya's teachings and eliminate the benefits that Iwamiya taught. As I explained previously, Iwamiya was particularly focused on using infrared light at 940 nm to avoid a problem with weak signals due to absorbance of visible light by melanin in the skin. *See* EX2070, ¶¶46-52. Iwamiya included

MASIMO 2122
Apple v. Masimo
IPR2024-00241

numerous features in all its embodiments that were carefully designed to exclude visible light (including red light) and detect the desired 940 nm infrared light, including:

- using only a single wavelength of light at 940 nm (EX1004, 6:31-34, 15:26-29, 29:45-50, 32:57-60),
- using a photodetector that is sensitive to infrared light but not visible light (*Id.* at 8:29-37, 18:41-50, 26:55-57, 38:66-39:8), and
- using an optical filter to filter out all light below 900 nm (*Id.* at 8:38-47, 18:51-60, 28:56-63, 39:9-19).

35. Now, however, Apple and Anthony argue that a POSITA would have added red LEDs, changed the sensitivity of the photodetectors to accommodate red light, and changed or removed the optical filter entirely. EX1042, ¶25; 1291 Reply, 13-14; 1465 Reply, 12. All these modifications are contrary to Iwamiya's repeated teachings. Indeed, the core of Iwamiya's disclosure reduces noise caused by light below 900 nm and the weak signals caused by absorption of light by melanin in the skin. A POSITA would not have read Iwamiya's specification, which repeatedly described at length multiple features designed to block visible light in order to reduce noise and improve the signal, and then eliminate all of those teachings to pursue the addition of a feature for which there was no reasonable expectation of success. Notably, Anthony's suggestion of removing the

[redacted]

optical filter entirely removes the reason for the light shielding frame 18 in Iwamiya, which was to hold the optical filter in place between the photodetector and the user's tissue. EX1004, 8:38-42. Apple fails to identify any reason to remove the filter yet keep the structure designed to hold it. Without that light shielding frame, which Apple argues would be modified with a dark-colored coating, Apple's combination fails to satisfy the claims.

36. Anthony's references to changing the "cutoff frequency" or using a "multi-band pass filter[]" are also contrary to Iwamiya's teachings and fail to show obviousness. EX1042, ¶25. As explained above, Iwamiya teaches multiple features designed to avoid light under 900 nm. Thus, a POSITA would have been dissuaded from adding red light to begin with, much less change the optical filter to let in light below 900 nm including red light. Anthony cites three exhibits, EX1070, EX1071, and EX1080, but these exhibits do not support a motivation to modify Iwamiya's optical filter. EX1070 describes a manufacturing process for a "two band filter," but only provides an example of a filter that appears to pass 2.5 and 4.0 micron light (2500 and 4000 nm, respectively). EX1070 does not show the existence of any two band filter that would work at the 660 nm and 940 nm ranges for red and infrared light, much less the obviousness of using such a filter in Iwamiya. EX1071 describes a "filter wheel" which is a rotating object powered by a motor. EX1071, ¶¶55-56. Anthony provides no explanation how a motorized

MASIMO 2122
Apple v. Masimo
IPR2024-00241

[redacted]

spinning object can replace Iwamiya's optical filter. And EX1080 describes multiple "optical filters" without any detail on their implementation. EX1080, ¶137. EX1080 does not have a structure similar to the light shielding frame and optical filter of Iwamiya. *Id.* at ¶137, Fig. 17.

37. Moreover, Apple argues that these are "design tradeoffs" in the pursuit of "adding a red wavelength to measure oxygen saturation." 1291 Reply, 15; 1465 Reply, 13. But it is not a "design tradeoff" to destroy the functionality of Iwamiya to pursue oxygen saturation measurements at the wrist. And as I have previously explained in detail, the proposed modification would not have any reasonable expectation of success. *See, e.g.,* EX2070, ¶¶20-34.

D. Anthony's Multiple Different Theories about Claim 25 Show the Combination Does Not Satisfy the Limitation

38. Claim 25 requires "wherein the second shape comprises a width and a length, wherein the width is different from the length." In my original declaration, EX2002-1465, I explained that Apple's argument was incorrect because (1) it merely labeled two arbitrary dimensions as a length and a width without regard to whether a POSITA would consider those dimensions a length or a width, and (2) Apple presented an alternative argument that labeled the dimension of some internal structure, not the shape of the light. *See* EX2002-1465, ¶¶92-94. In Reply, Apple and Anthony present yet another theory on how Iwamiya supposedly discloses the limitation, as shown below:

MASIMO 2122
Apple v. Masimo
IPR2024-00241

[redacted]

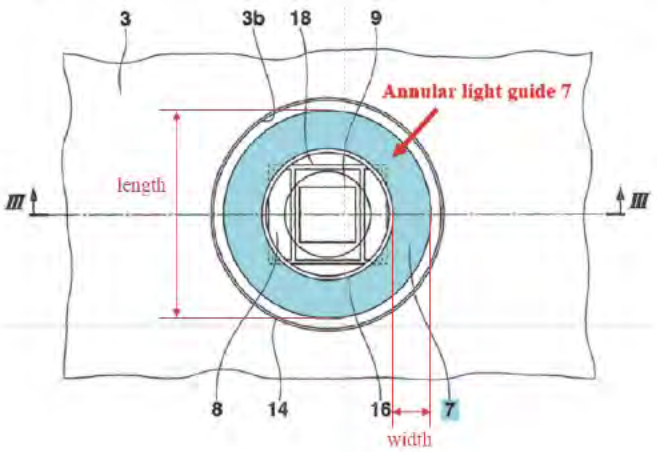

See 1465 Reply, 21-22; EX1042, ¶¶51-52.

39. A POSITA would not consider an annular shape to have a width or a length. EX2002-1465, ¶92. Indeed, Apple's different labeling in the Petition (shown below) demonstrates that a POSITA would not consider Iwamiya's annulus to have a width or length.

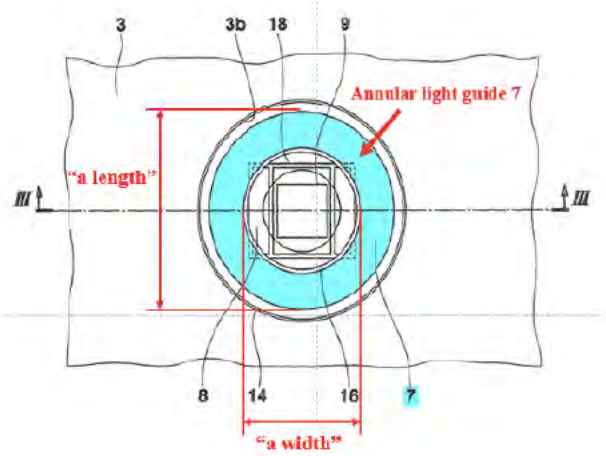

1465 Petition, 37.

40. Apple also argues that "Iwamiya's disclosure illustrates the broad scope of the claim language, which merely requires that the second shape have two

[redacted]

dimensions that are different." 1465 Reply, 21. I disagree with that new claim construction. Iwamiya is not the '745 Patent and does not inform the scope of Claim 25.

VI. THE SARANTOS+SHIE GROUNDS DO NOT SHOW OBVIOUSNESS

A. Shie Has Nothing to Do with Physiological Monitoring

41. The Petition never explained what optical element of Shie would supposedly be combined with Sarantos. EX2070, ¶75. Apple now argues in Reply: (1) "The proposed Sarantos-Shie relies on Shie's general teaching of an optical element that shapes the light output, not any of Shie's particular optical elements," and (2) "Shie discloses both cylindrical and Fresnel-type lenses, referenced by cited disclosure in the Petition, that would have been obvious to transform light from a first shape to a second shape (e.g., between circular and elliptical shapes or between square and circular shapes). 1291 Reply, 25; 1465 Reply, 23-24. However, the Petition did not identify a cylindrical lens or Fresnel lens for Claims 1 and 20. And as I explained in my all my previous declarations, Shie has nothing to do with physiological sensors. *See* EX2070, ¶¶17, 79; EX2002-1291, ¶66; EX2002-1465, ¶66. Instead, Shie describes Fresnel lenses as used in, *e.g.*, "automotive applications for objects as simple as interior dome lights, simple trailer lights and in various vehicle taillamp construction." EX1007, 6:8-11. Apple never explains why a POSITA would have looked to Shie in the first

MASIMO 2122
Apple v. Masimo
IPR2024-00241

[redacted]

place or would have known which out of the many optical elements would have been combined with Sarantos.

42. Apple's Reply points to a page in an exhibit (EX1046) that references "[v]arious optical elements are used routinely to manipulate light in optical instrumentation." 1291 Reply, 25; 1465 Reply, 24. However, that exhibit identifies numerous optical elements like "lenses, mirrors, light choppers, beam splitters, and couplers." EX1046, 10. That optical elements *could* be used in some instruments does not explain why a POSITA *would* have looked to Shie, much less any particular element like a cylindrical or Fresnel lens in Shie. Moreover, EX1046 does not discuss changing the shape of light from a first shape to a second shape as claimed, and involves a "fiber optic sensor" that is put into a sampled medium, which is not relevant to Sarantos:

MASIMO 2122
Apple v. Masimo
IPR2024-00241

[redacted]

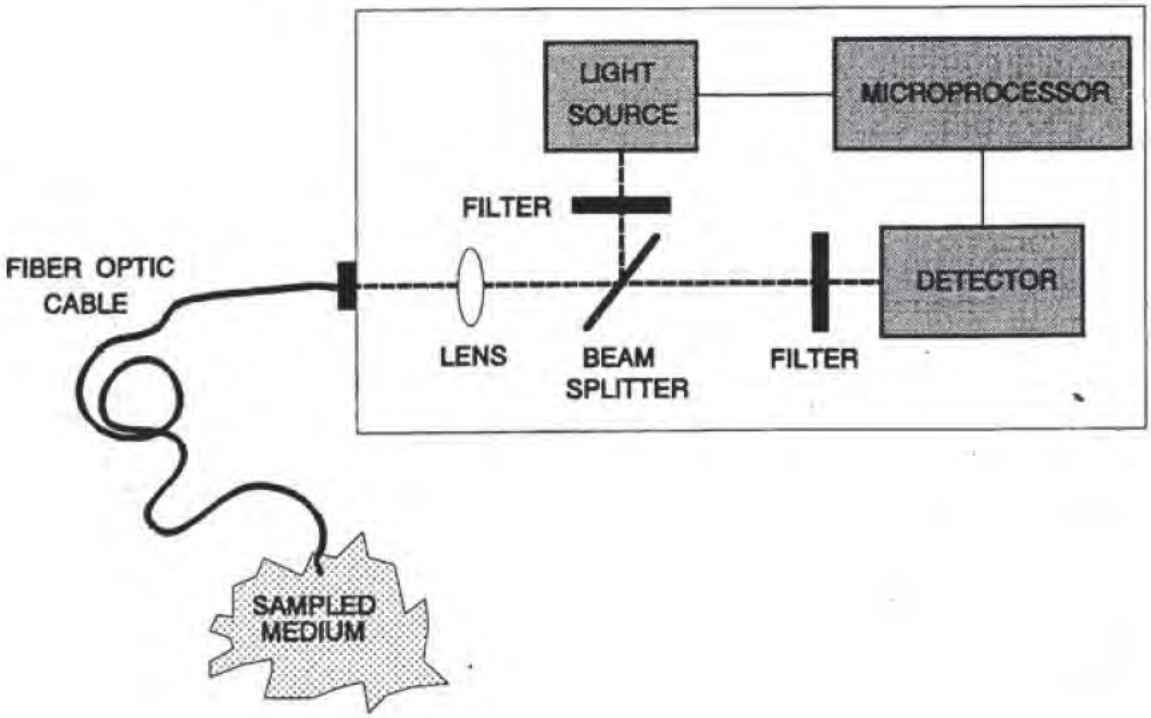

EX1046, 10.

43. Apple argues that Shie describes changing the shape of light by referring to Shie's vague references to "shape" and "shaping." 1291 Reply, 24-25; 1465 Reply, 22-24; EX1042, ¶¶53-59. Apple criticizes my deposition answers about Shie's disclosure regarding those words in Shie. 1291 Reply, 24; 1465 Reply, 22-23. But as I explained previously, Shie's description does not explain what it means by "shape" or "shaping", and Apple never explains how it contends any particular optical element would be combined with Sarantos to be able to determine whether the combination would satisfy the "first shape" and "second shape" limitations. EX2070, ¶¶110-112. Apple still has not explained how a

[redacted]

cylindrical lens or Fresnel lens would be integrated into Sarantos with sufficient detail to evaluate the claim limitation.

44. Anthony also proposes using a cylindrical lens that he asserts will spread light "in a direction perpendicular to its width." EX1042 ¶¶57-58. As Dr. Anthony concedes, a cylindrical lens would spread light in just one direction. EX1042 ¶57. But the Sarantos-combinations all involve symmetrically placed detectors. There is no need to direct light in one direction to reach those detectors because the detectors are on all sides. Indeed, spreading light in only one direction, as Dr. Anthony proposes, would decrease light reaching the combination's other detectors in the other plane. A POSITA would have understood that this result is particularly problematic and undesirable because spreading light out from its distribution pattern would undermine Sarantos's HAR detector design, which is constructed in a way that maximizes the capture of an already defined light distribution. *See, e.g.,* EX1005, 10:27-36, Figs. 4-6; *see also* EX2070, ¶81. Anthony also suggests Shie discusses a Fresnel lens. EX1042 ¶59. But he merely observes that a Fresnel lens could change the shape of emitted light without ever explaining why a POSITA would have wanted to arbitrarily use a Fresnel lens with microstructures to change light from a square-shaped light beam into a circle, or a circular light beam into a square. While Anthony asserts a Fresnel lens "is commonly used in a reflective pulse oximeter," (EX1042 ¶59) the

[redacted]

cited references (EX1073, [0004], [0020]-[0021], [0031]-[0032], [0035]; EX1074, [0050], [0061]-[0064]) treat the use of a Fresnel lens as innovative. They do not suggest a Fresnel lens was a commonly used feature in reflective devices generally, or in pulse oximeters specifically. Indeed, my understanding is that [redacted]. EX2070, ¶¶20-34 ([redacted]).

B. A POSITA Would Not Have Been Motivated to Combine Sarantos and Shie

45. In my prior declaration, I criticized Apple's motivations to combine Sarantos and Shie for many reasons. *See* EX2070 ¶¶78-87 (summarized below). Apple's Reply argues that these criticisms "are based on Masimo's incomplete understanding of the prior art, as Anthony explains." 1291 Reply, 26; 1465 Reply, 24. However, Anthony's supplemental declaration does not address the majority of my criticisms. For reference, Apple's Petition and Dr. Anthony's original declaration set forth three motivations to combine Sarantos and Shie, none of which were supported by any evidence:

- "to precisely direct the light emitted toward the tissue so as to increase power efficiency by shining light closer to photodiodes"

[redacted]

- "increase accuracy of measurements by directing light towards a larger area to decrease irregular readings caused by moles or other aberrations on the skin," and
- "to obscure the LED's appearance from a user."

1291 Petition, 32; 1465 Petition, 40-41; EX1003-1291, ¶76; EX1003-1465, ¶119.

46. In my previous declaration, I criticized these motivations to combine for many reasons, including:

- Shie has nothing to do with physiological monitoring, so a POSITA would have no reason to even look to it (EX2070, ¶79);
- directing light towards the tissue makes no sense in the context of Sarantos' sensor design because the LED is already placed next to the tissue (*Id.* ¶80);
- there is no need to direct light because Sarantos designed the HAR photodetectors to capture nearly all of the light emitted by the LED and scattered by the tissue (*Id.* ¶81);
- Apple did not explain how or identify any material from Shie that could direct the light towards the tissue to shine light closer to photodiodes (*Id.* ¶82);

[redacted]

- Apple's two motivations of "precisely direct the light" closer to the photodiodes and directing light towards a larger area describe opposite results and are incompatible with each other (*Id.* ¶82);
- shining light closer to photodiodes is ordinarily accomplished by physically placing the LED and photodiodes closer together and Sarantos already disclosed the optimum distance, and shining light even closer would be detrimental to the signal because it would be dominated by the DC component (*Id.* ¶¶83-84);
- using a diffuser does not increase power efficiency, but rather decreases it because it spreads light over a larger area and reduces the local intensity of the light (*Id.* ¶85);
- there is no evidence that POSITA would have been motivated to use a light shape changing material or any diffuser from Shie to address moles or skin aberrations (*Id.* ¶86); and
- the cosmetic obscuration motivation makes no sense because the LEDs are normally hidden from the user's view and obscuration would decrease power efficiency (*Id.* ¶87).

47. Anthony's supplemental declaration does not respond to many of those criticisms listed above. *See* EX1042, ¶¶60-64. The only criticism that Anthony directly addresses is that Sarantos already designed the HAR

MASIMO 2122
Apple v. Masimo
IPR2024-00241

[redacted]

photodetectors to capture as much of the light as possible and that adding a diffuser or material to change the shape of light would have negated Sarantos' design. EX1042, ¶64. Anthony argues that there would be unidentified "design tradeoffs" to implementing the light-shape changing features and argues that changing the shape of the light as shown in these two alternative figures below would result in increased light detection:

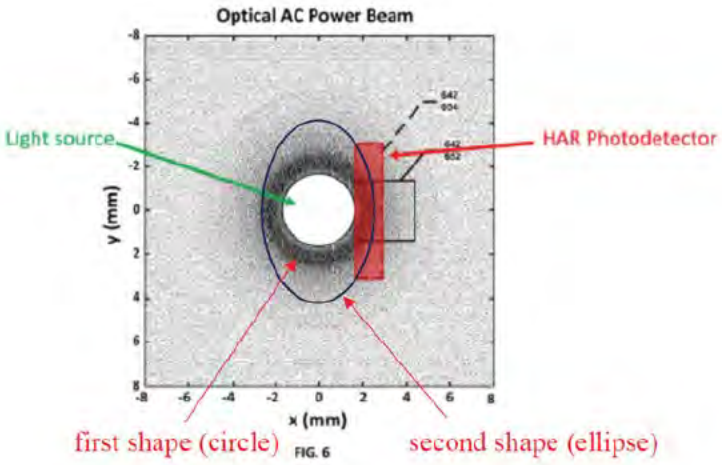

APPLE-1005, FIG. 6 (annotated)

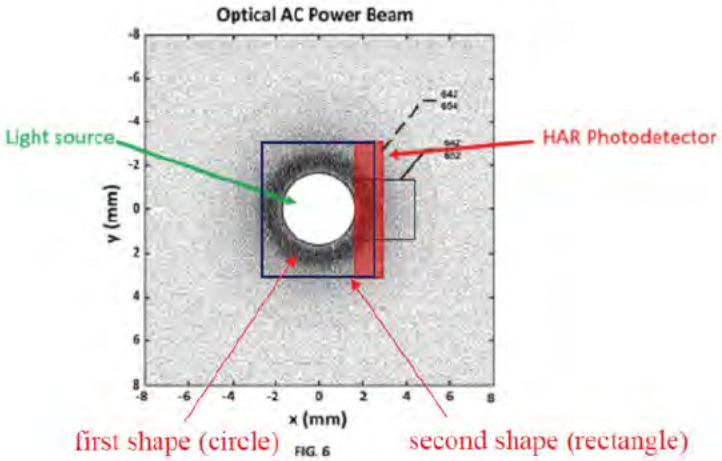

APPLE-1005, FIG. 6 (annotated)

MASIMO 2122
Apple v. Masimo
IPR2024-00241

[redacted]

EX1042, ¶64 (Anthony's annotations of Sarantos' Fig. 6). But Anthony's argument and annotations make no sense.

48. First, Anthony labels the dark ring in Sarantos' Figure 6 as the "first shape (circle)." Anthony also labels an ellipse in the left figure as "second shape (ellipse)" and the rectangle in the right figure as "second shape (rectangle)." However, these are not the "first shape" and "second shape" recited in Claims 1 and 20. Claims 1 and 20 require a plurality of LEDs "configured to emit light in a first shape." Sarantos' Figure 6 does not show the first shape of light emitted by the LEDs. The dark ring that Anthony identified is a simulation of the "intensity or power of light that is emanated within a 16 mm by 16 mm region of skin as a result of light that is shined into the skin at the center of the region." EX1005, 6:5-8, *see also id.* at 10:51-11:3. In other words, that dark ring, which Anthony identified as the "first shape (circle)" is the ***light that is reflecting out of the user's tissue after it has already been scattered, absorbed, and reflected by the user's tissue.*** Thus, the "first shape" of light that is emitted from the LEDs, whatever it may be, is not shown at all in this figure. Because Anthony's premise is wrong, his annotated figures do not show the claimed "second shape" either.

49. Second, Anthony identifies no mechanism that a POSITA would have used to change how the light is reflected back through the tissue in the precise shapes that Anthony drew. A POSITA would not understand that it is even

MASIMO 2122
Apple v. Masimo
IPR2024-00241

possible for the shapes of light reflected back from the user's tissue to appear like the ellipse and rectangle that Anthony drew on Sarantos' Figure 6. Light scatters randomly in all directions in tissue. Indeed, in other places in his declaration, Anthony argues that A POSITA would have understood that in a reflectance oximeter, the light from LEDs passing through the skin "forms a circular pattern." EX1042 ¶21. It would not be possible to obtain the precise targeting that Anthony claims would be possible with the Sarantos+Shie combination and relies on as evidence of a motivation to combine.

50. Instead of responding to the rest of my criticisms, Anthony cites new references to support the three motivations to combine, for which he originally cited nothing. *Id.*; *see also* EX1003-1291, ¶76 (citing nothing but an unknown document to support the motivations to combine); EX1003-1465, ¶119 (same). I have reviewed that new evidence and it does not support the supposed motivations to combine.

51. ***First***, Anthony cites three references, EX1047, EX1013, and EX1006, for the unremarkable proposition that the photodetector needs to receive sufficient light for the signal. EX1042, ¶61. But Apple does not identify any deficiency with Sarantos' light collection ability that requires modification. Indeed, Sarantos optimized the design of the HAR photodetectors. *See* EX2070, ¶81. Thus, Anthony provides no reason to turn to EX1047, EX1013, and EX1006. Anthony

MASIMO 2122
Apple v. Masimo
IPR2024-00241

[redacted]

also cites Han (EX1074), an Apple patent filed in December 2014 with a watch design:

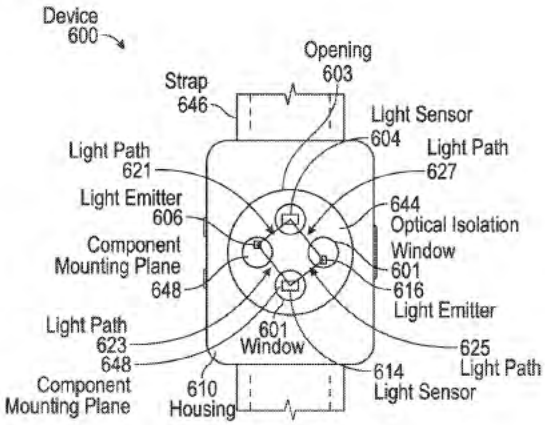

FIG. 6A

EX1074, Fig. 6A. But Han is an inapt reference because it does not change the shape of light. In fact, Han is listed on the '745 Patent as one of the references cited. *See* EX1001, page 8 (References Cited listing 2016/0058312 to Han et al.). Thus, it is my understanding that the Patent Office already considered Han. Moreover, the portion of Han that Anthony block quoted in his paragraph 61 was related to "electronic devices … for determining a ***heart rate*** signal," and discusses using a Fresnel lens for "steer[ing] the light." EX1074, ¶¶49 (emphasis added), 50. Han is also unrelated to SpO_2 measurements. Han was filed in December 2014—years before Apple was able to successfully design a product that determined oxygen saturation at the wrist. And as I discuss in more detail in Section VI.C., Apple's engineer testified that [redacted]

[redacted]

[redacted] *See supra* Section VI.C; EX2085, 9; EX2070, ¶¶20-34 (Apple engineer testimony and documents showing [redacted]

52. ***Second***, Anthony now cites EX1013, EX1046, and EX1048 to support his argument about spreading light over a larger area to "reduce the effect of moles and skin aberrations." EX1042, ¶62. But none of those references discuss using an optical material to change the shape of light to address any problems based on skin moles or skin aberrations. Anthony cites EX1013 (Webster) at PDF page 105 as his sole support that a "POSITA understood that illuminating a larger pulsatile vascular bed would reduce the effect of moles and skin aberrations." EX1042, ¶62. But that page in Webster has nothing to do with "illuminating a larger pulsatile vascular bed" to reduce the effect of moles or skin aberrations, much less using an optical material to change the shape of light. EX1013, 105. Rather, that section of Webster discusses increasing the brightness of an LED so that the light can penetrate deeper in the tissue. *Id.* It says nothing that would motivate a POSITA to modify Sarantos in any way other than increasing the brightness of the LED.

53. ***Third***, Anthony also relies on Han (EX1074) to argue that "An optical element with diffusing microstructures, which forms a portion of the back cover,

MASIMO 2122
Apple v. Masimo
IPR2024-00241

would obscure the LED's appearance from the user while allowing light transmission toward the tissue." EX1042, ¶63 (citing EX1074, ¶¶60-63). But that has nothing to do with a material that changes the shape of light as claimed. Furthermore, Han does not disclose an optical element with "diffusing microstructures." Rather, Han describes using a Fresnel lens to obscure the LED. EX1074, ¶¶60-63. Thus, Han does not provide any reason to modify Sarantos to add any optical material from Shie. Furthermore, as I explain below, there would not have been a reasonable expectation of success in combining Sarantos with a Fresnel lens to determine oxygen saturation at the wrist.

54. Anthony offers a separate opinion about Claim 25. EX1042, ¶77. I disagree with Anthony that Claim 25 would have been obvious for the same reasons discussed above.

C. There Is No Reasonable Expectation of Success for Apple's New Combination of Sarantos and Shie

55. Apple's Reply and Anthony's supplemental declaration argue, for the first time, that Sarantos would be combined with specific structures not identified in the Petition: a cylindrical lens or a Fresnel lens from Shie. However, there would not have been any reasonable expectation of success that those combinations would be able to determine oxygen saturation at the wrist.

56. First, regarding the cylindrical lens, Apple and Anthony cite no example where a cylindrical lens is used in a pulse oximeter at the wrist. Apple

MASIMO 2122
Apple v. Masimo
IPR2024-00241

and Anthony cited no evidence that Sarantos, combined with a cylindrical lens from Shie, would be able to determine oxygen saturation at the wrist.

57. Second, regarding the Fresnel lens, Apple and Anthony cite no evidence that Sarantos combined with a Fresnel lens would be able to determine oxygen saturation at the wrist. Indeed, Apple reported: "conventional sensing methods do not result in waveforms that are consistent enough for SpO2 measurements at the wrist." EX2085, 13.

EX2085, 9.

MASIMO 2122
Apple v. Masimo
IPR2024-00241

[redacted]

[redacted] EX2079, 835:2-4, 836:3-16. [redacted] *Id.* at 837:4-18. [redacted]

D. Sarantos' Figures 22 and 25 Are Distinct Embodiments and Apple Presented New Theories Combining Those Two Embodiments (Limitations [15.3] and [15.4])

58. Apple's Reply argues that no combination of Sarantos' Figures 22 and 25 "was required to show unpatentability." 1291 Reply, 26; 1465 Reply, 25. Apple goes so far as to label Sarantos' description of Figures 22-25 as "***cohesive***" and a "natural extension of the device." *Id.* Neither Apple nor Anthony explains what this means. But to the extent Apple and Anthony use that as shorthand for the same embodiment, that is incorrect. A POSITA reading Sarantos would understand that Figures 22 and 25 are two distinct embodiments. Sarantos explains that Figure 22 shows "two ***HAR*** photodetector elements." EX1005, 17:1-3 (emphasis added), *see also id.* at Fig. 22. In contrast, Figure 25 shows a "***non-***

MASIMO 2122
Apple v. Masimo
IPR2024-00241

HAR" photodetector element. *Id.* at 19:22-32 (emphasis added). Moreover, as I previously explained, Figure 22 shows ***two*** photodetectors while Figure 25 shows ***one*** annular photodetector. *See* EX1005, Figs. 22, 25, 17:1-3 ("***two*** HAR photodetector elements 2212"), 19:33-35 ("***an*** annular photodetector element 2512").

59. Sarantos confirms they are not the same embodiment. The specification groups "FIGS. 22 through 24," but separately describes Figure 25. EX1005, 6:52-57. Further, Sarantos at 16:60-62 references "FIGS. 22 through 24" only and explains that some components in "FIGS. 22 through 24 are indicated by numeric indicators having the last two digits in common, and may only be described once with respect to FIG. 22." The specification did not include Figure 25 in that section. Accordingly, Figures 22 and 25 are not "cohesive" and the Petition did not combine them in a way that would result in a "light block having a circular shape" for Limitation [15.3].

60. Furthermore, Apple and Anthony presented yet another new modification to Sarantos' Fig. 25 to address Limitation [15.4]. As I noted in my original declaration, EX2002-1291, Apple's Petition did not set forth how Sarantos+Shie discloses "the plurality of photodiodes are arranged in an array having a spatial configuration corresponding to a shape of the portion of the tissue measurement site encircled by the light block." *See* EX2002-1291, ¶129. The

[redacted]

Petition's entire argument relied on Sarantos' Fig. 22 only, which has ***two*** photodetector elements, and stated that "Photodetector elements 2212 are positioned just outside of walls 2274." 1291 Pet., 37-38. Apple presented no further elaboration or explanation. The Petition never referenced Figure 25 for Limitation [15.4]. *See id.* But now, Apple's Reply and Anthony's supplemental declaration rely on Figure 25 and argue it would be further modified by replacing the single non-HAR annular photodetector with many smaller photodetectors, as shown in Apple's drawing below:

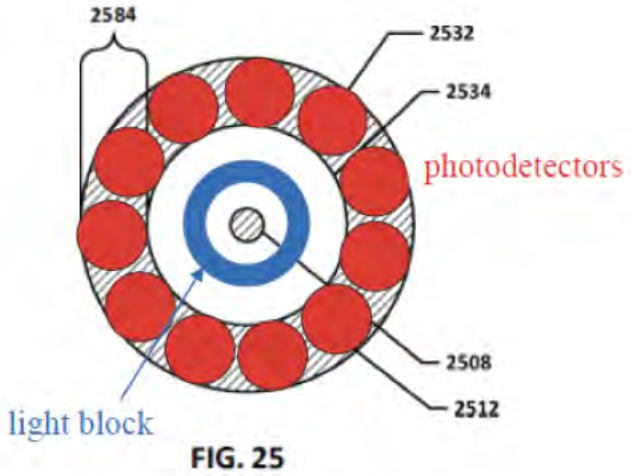

APPLE-1005, FIG. 25 (modified)

1291 Reply, 28; 1465 Reply, 26. Apple never explains any source for its red circular photodetectors. They appear to be imagined to better fill the space of the annular photodetector in Sarantos Fig. 25. *See* EX1042, ¶72 (explaining that the red circles can be square or rectangle photodetectors). Regardless, any of the shapes identified by Anthony would result in a loss of surface area for the detector

[redacted]

compared to the original Sarantos annular detector. In my opinion, that would decrease performance and be undesirable. For at least these reasons, Apple has set forth no reason to begin with Figure 25, much less to modify it.

61. Nothing would have motivated a POSITA to modify the embodiment shown in Figure 25. Sarantos teaches that "[i]n addition to the HAR photodetectors … performance increases over square-photodetector-based PPGs for heart rate measurement may be realized through the use of non-HAR and non-square photodetector elements that generally encircle the light source and that have a central opening in the middle for the light source to shine through." EX1005, 19:22-27. Thus, Sarantos discouraged the use of conventional photodetectors in favor of its ring-shaped photodetectors. Indeed, as shown above, Apple's proposed modification reduces the light detection area compared to Sarantos' annular photodetector.

62. Apple and Anthony also rely on a statement in Sarantos in the reservation and catch-all language at the end of the specification that "any of the implementations discussed above with respect to a single photodetector element spaced apart from a light source may also be implemented using a plurality of photodetector elements arranged about the light source." EX1042, ¶72 (citing EX1005, 20:52-57). But a POSITA would not have understood that to mean modifying Figure 25 in the manner that Apple now advocates. Rather, Sarantos

MASIMO 2122
Apple v. Masimo
IPR2024-00241

[redacted]

shows how to implement a "plurality of photodetector elements arranged about the light source" in Figures 17 and 18:

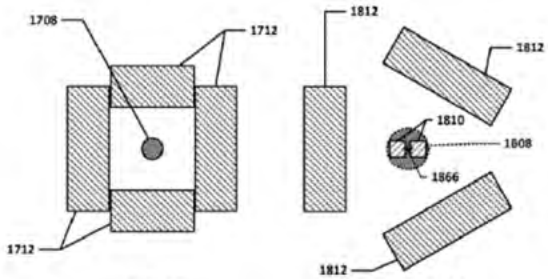

FIG. 17 FIG. 18

EX1005, Figs. 17-18. Apple and Anthony never address this teaching or explain why a POSITA would jump past it to Apple's hindsight modification. Thus, in my opinion, a POSITA would not have been motivated to modify Figure 25 as Apple did in its Reply.

VII. NO REASONABLE EXPECTATION OF SUCCESS IN DETERMINING OXYGEN SATURATION AT THE WRIST

A. The New References Do Not Show a Reasonable Expectation of Success, but Rather a Long-Felt but Unmet Need for Determining Oxygen Saturation at the Wrist

63. Apple and Anthony rely on many new references in support of their reasonable expectation of success arguments. EX1042 ¶¶27-34. Because neither Apple nor Anthony previously indicated that these references were relevant to their analysis, I did not address them in my previous declarations. As discussed below, I disagree that the newly cited references demonstrate a reasonable expectation of success for determining oxygen saturation at the wrist.

64. As an initial point, as discussed above in Section IV.A., determining oxygen saturation as recited in the claims requires calculating oxygen saturation. Oxygen saturation determinations, at a high level, depend on a complicated ratio of different signal components obtained from different PPG signals. If the ratio between different signal components at different wavelengths are not sufficiently consistent and comparable, the sensor will not be able to determine oxygen saturation. Obtaining a PPG signal is a necessary but not sufficient part of determining oxygen saturation. Thus, in my opinion, a POSITA would not have viewed a disclosure that describes merely obtaining a PPG signal at the wrist as supporting a reasonable expectation of success for determining oxygen saturation at the wrist.

MASIMO 2122
Apple v. Masimo
IPR2024-00241

[redacted]

EX2085, 5.

65. The following analysis addresses the new references (EX1050-EX1056, EX1058, and EX1061-EX1066) Anthony cites in support of his reasonable expectation of success arguments in the same order as they appear in Anthony's declaration. EX1042 ¶¶27-34. As explained below, EX1050 (Pang), EX1051 (Li), EX1053 (Cai), EX1055 (Maatala), and EX1056 (Fontaine) are, at most, preliminary work that does not demonstrate any successful oxygen saturation determinations at the wrist and would not have provided a POSITA with a reasonable expectation that the prior art could be combined to achieve the claimed invention. Moreover, the apparent sensor setup in each exhibit is different than the claimed sensor.

MASIMO 2122
Apple v. Masimo
IPR2024-00241

[redacted]

66. In paragraph 28 Anthony provides his analysis of EX1055 (Maattala). I disagree that EX1055 supports a reasonable expectation of success for determining oxygen saturation at the wrist. As the authors expressly state, in the study "we concentrated on studying SNRs and signal amplitudes instead of finding out actual SpO2-readings." EX1055, 1858. Thus, the signal recorded was not a determination of oxygen saturation. Indeed, the authors indicated "[m]any problems still have to be overcome…." EX1055, 1860; *see also* Abstract (". . . many problems, that should be overcome, were detected.") I note the apparent sensor setup used in EX1055 is different from the claimed invention. EX1055, 1858 (Figure 5).

67. In paragraph 29 Anthony provides his analysis of EX1053 (Cai). I disagree that EX1053 supports a reasonable expectation of success for determining oxygen saturation at the wrist. EX1053 has no experimental data results showing that this sensor can accurately measure oxygen saturation. There is only one pulse wave signal shown. EX1053, 1899 (Figure 5). The pulse wave is not identified as either a red or infrared signal. Under "Experimental Results," the only disclosure is a "Change map of the value of R after breath holding for 10s and 25s." EX1053, 1900. There is no indication of how "R" was calculated. Although EX1053 states the system can "detect the change of oxygen saturation," that is different from determining oxygen saturation because detecting a change is not the same as

MASIMO 2122
Apple v. Masimo
IPR2024-00241

[redacted]

calculating the oxygen saturation value. EX1053 has no successful determination of oxygen saturation. I further note the apparent sensor setup used in EX1053 is different from the claimed invention.

68. In paragraph 30 Anthony provides his analysis of EX1051 (Li). I disagree that EX1051 supports a reasonable expectation of success for determining oxygen saturation at the wrist. EX1051 appears to be another publication from the Warren group. EX1051 does not present any oxygen saturation data. EX1051 presents a PPG waveform, but does not indicate whether the data is from red or IR wavelengths. I note that EX1051 points out the problems with trying to obtain high quality PPG data from the wrist (page 276 Section B.) stating, *e.g.*, "it is difficult to consistently obtain high quality PPG data from the wrist," and that PPG measurement "often requires the application of pressure to bring the optical sensor closer to the major arteries" or bending the wrist at an awkward 45 degree angle. EX1051 also noted that PPG determination required testing and placing the sensor at multiple different locations to acquire data. EX1051 at 276, Section B. The paper concludes that the sensor was "designed for research and education" and "potential as a research and teaching platform." I further note the apparent sensor setup used in EX1051 is different from the claimed invention. EX1051 at 274 (Figure 10).

MASIMO 2122
Apple v. Masimo
IPR2024-00241

[redacted]

69. In paragraph 31 Dr. Anthony provides his analysis of EX1056 (Fontaine). I disagree that EX1056 supports a reasonable expectation of success for determining oxygen saturation at the wrist. A POSITA would not have relied on EX1056. EX1056 is an undated, unsigned document. It is not a publication in a journal or a presentation or abstract from a scientific conference. The front page of EX1056 indicates it is "A Major Qualifying Report" from four undergraduates. EX1056 at 1. However, the document is not signed by any of the students and was not signed for approval by Professor Mendelson. *Id.* For these reasons alone, a POSITA would not have relied upon EX1056.

70. Anthony points to an accuracy claim of "±1% and ±3% for SpO_2 and PR respectively from the wrist." EX1042, ¶31. However, a POSITA would not have accepted that claim because it is completely unreliable and untrustworthy. Indeed, a POSITA would have immediately regarded the claim that the SpO_2 measurements were more accurate than the much easier pulse rate measurements with *extreme* skepticism. Indeed, the students did not calculate the reported accuracy using a generally accepted methodology (which would have been root-mean-square error as compared to the actual arterial oxygen saturation as determined by blood draws, not against another pulse oximeter with its own associated errors).

MASIMO 2122
Apple v. Masimo
IPR2024-00241

[redacted]

71. Diving deeper into the paper reveals that the accuracy of the device and the reported values are entirely untrustworthy. The students did not perform a proper desaturation test to determine the accuracy of the sensor over the range of 70-100%, as a POSITA would have expected. Nearly all the of listed data was in the extremely narrow range of 97%-99%. EX1056, 119-128. Calculating error over such a tiny range of values produces a meaningless result because it says nothing of the error outside that range. Indeed, the students recognized the limited range of data as a deficiency in their report. EX1056, 72 ("To correctly plot a regression line, one would need to change the SpO_2 levels over a larger range such as 70-100% in order to have a better idea of how well our device compares to the reference pulse oximeter."), 101 ("To ascertain a more precise accuracy for the prototype, further testing should be done in which the SpO_2 levels range from 70-100%"). In fact, the students' dataset shows that their prototype sensor was wildly off. *See* EX1056, 73 (showing prototype measured 99% while reference measured 93%). Additionally, the paper also shows that the students' prototype was very inaccurate for the easier pulse rate measurements, often off by 20 bpm or more. *See id.*, 71. This suggests to a POSITA that the students' collected PPG data were more corrupted than they realized and would indicate that the SpO_2 results the students provided were not reliable. Given the lack of any meaningful testing and incorrect calculations, a POSITA would not have viewed these results as

MASIMO 2122
Apple v. Masimo
IPR2024-00241

[redacted]

trustworthy or indicating any expectation of success. The sensor also routinely obtained "corrupted" data, reporting that "the PPG was somehow affected by factors such as motion artifact or inconsistent pressure." EX1056, 61. I further note that the apparent sensor design in EX1056 is very different from the claimed invention. EX1056 at 52. Thus, the student project does not show any reliable or trustworthy data that would provide a POSITA with a reasonable expectation of success.

72. In paragraph 32 Anthony provides his analysis of EX1050 ("Pang"). I disagree that EX1050 supports a reasonable expectation of success for determining oxygen saturation at the wrist. EX1050 does not present any oxygen saturation determinations from the wrist. Instead, the only data presented are separate red and IR waveforms. There is no indication that these waveforms are time correlated, which is a very important factor. I note that EX1050 relies on simulated—not actual—data in Figure 13, further confirming that the authors were not able to take that final step and actually determine oxygen saturation. EX1050 at 1566 (noting use of simulator). I further note the apparent sensor setup used in EX1050 is different from the claimed invention.

73. I searched for any subsequent successful determinations of oxygen saturation at the wrist from the authors of EX1050, EX1051, EX1053, EX1055, and EX1056, discussed above. I found no evidence any of these authors were ever

MASIMO 2122
Apple v. Masimo
IPR2024-00241

[redacted]

able to successfully determine oxygen saturation at the wrist. I note that although Dr. Mendelson (the project advisor for the student project in EX1056) published subsequent articles on pulse oximetry, he did not determine oxygen saturation at the wrist and instead determined oxygen saturation at other locations. If the authors of EX1050, EX1051, EX1053, EX1055, and EX1056 had been able to successfully determine oxygen saturation at the wrist, I would have expected at least a follow-on publication disclosing these results. The absence of any such work indicates to me that the authors were never able to successfully determine oxygen saturation at the wrist.

74. In paragraph 33 Anthony includes a footnote citing EX1039-EX1041, but provides no analysis. I presented my analysis of EX1039-EX1041 in my previous declaration and there is nothing to respond to in Anthony's declaration. *See* EX2070, ¶¶38-43.

75. In paragraph 34 Anthony cites ten patents, which are exhibits EX1052, EX1054, EX1058, EX1061, EX1062, EX1063, EX1064, EX1038, EX1065, and EX1066, and states that "[t]hese prior art patent and patent application references publicly available years before the '745 Patent show that wrist-worn pulse oximetry sensors, such as that described in Sarantos, were well-known in the art." EX1042, ¶34. As explained below, I disagree. I also note that Anthony provided no analysis of these references. He simply cited portions of the

MASIMO 2122
Apple v. Masimo
IPR2024-00241

[redacted]

references without any further explanation. In fact, one of the references he cited, Scharf (EX1038), is a reference that I already criticized at length in my prior declaration. *See* EX2070, ¶¶40-43. But Anthony did not respond to any of my criticisms and provided no analysis of Scharf beyond citing it.

76. I reviewed each of EX1052, EX1054, EX1058, EX1061, EX1062, EX1063, EX1064, EX1038, EX1065, and EX1066 and they do not support a reasonable expectation of success in determining oxygen saturation at the wrist. Many of these references, including Brady (EX1052), Rulkov (EX1058), Ackermans (EX1061), Goldreich (EX1062), Shmueli (EX1063), Sarussi (EX1064), Kondo (EX1065), and Fraser (EX1066) contain only passing mentions to oxygen saturation with little to no details on the implementation. At best, some references might include a reference to red and infrared light, but that is not sufficient to provide a POSITA with a reasonable expectation of being able to determine oxygen saturation at the wrist. Indeed, Brady (EX1052), for example, is focused on calculating burned calories and only contains passing mentions to oxygen saturation. As another example, Goldreich (EX1062), describes a wrist device where the user has to place their finger on top of the device in order to measure SpO_2. *See* EX1062, ¶126 ("To perform SpO2 measurement, the user presses a finger against sensor 566…"), Fig. 5 (SpO2 sensor 566 is located on the top face of the watch-like device).

MASIMO 2122
Apple v. Masimo
IPR2024-00241

[redacted]

77. Lindberg (EX1054) is another patent that Anthony references for reasonable expectation of success. Anthony points to pages 80-81 of this patent which are figures that appear to show a "Experimental set-up" with a wrist device with six LEDs and one photodetector. EX1054, 80-81. However, the description of these figures explains that those six LEDs all had the same 875 nm wavelength. EX1054, 50. That device would not have been capable of determining oxygen saturation.

78. Overall, none of the new papers, student projects, or patent references that Anthony cited in his Reply declaration show a reasonable expectation of success for determining oxygen saturation at the wrist.

79. I also note that during my deposition on August 9, 2023, Apple's lawyers introduced EX1050-EX1058 and asked if I had considered those documents in forming my opinions in my most recent declaration, EX2070. *See* EX1059, 65:3-77:20. Anthony cited all of those exhibits ***except for EX1057*** in his supplemental declaration as supposedly supporting his opinion on reasonable expectation of success. Apple also omitted any mention of EX1057 from its Reply brief. As explained below, EX1057 shows that there would not have been any reasonable expectation of success and intentionally avoided discussing it.

80. EX1057 is a review on CNET.com (a relatively popular consumer electronics website) posted on April 25, 2014 (about a year before the '745 Patent

MASIMO 2122
Apple v. Masimo
IPR2024-00241

[redacted]

filing date) about the Withings Pulse O2. The Pulse O2 is a device that is worn on the user's wrist, as shown in the photo below:

EX1057, 2. The Pulse O2 also had a heart rate and SpO_2 sensor, according to the review. EX1057, 3 ("It's now essentially a pulse oximeter, like what you'd use in a hospital."). However, the Pulse O2 ***could not determine oxygen saturation from the wrist.*** Instead, the article states "both the heart rate monitoring and O2 reading ***have to be done when standing still and using your finger.***" *Id.* at 3 (emphasis added). As shown below, the Pulse O2 had to be ***removed from its wrist clip*** and placed ***on the fingertip*** in order to measure heart rate and SpO_2.

MASIMO 2122
Apple v. Masimo
IPR2024-00241

[redacted]

EX1057, 3. The review even confirms that the Pulse O2 design is unable to measure from the wrist because "it requires your finger to use, and ***there's no hole in the back of the band to take readings.***" *Id.* at 5 (emphasis added). The review described that design as "***seriously annoying.***" *Id.* (emphasis added). Withings' design confirms that a POSITA at the relevant time would not have considered measuring oxygen saturation at the wrist to be well-known. Consistent with the testimony of Apple's engineers, Withings shows that determining oxygen saturation at the wrist was not well-known and was still an unsolved challenge at the time of the '745 Patent.

81. After reviewing Anthony's declaration and the newly cited references, I maintain my opinion that a POSITA would not have had a reasonable expectation of success of determining oxygen saturation at the wrist. In fact, the references

MASIMO 2122
Apple v. Masimo
IPR2024-00241

only further support my opinion that there would not have been a reasonable expectation of success. The newly cited references date back as early as 2001 (e.g., EX1054, dated 2001), yet there were still no such devices that could determine oxygen saturation at the wrist as of 2014/2015 EX2076, 964:4-6. Rather than showing any reasonable expectation of success or that determining oxygen saturation at the wrist was "well-known," the references collectively show that there was a great desire and need in the industry to achieve a device that could determine oxygen saturation at the wrist. Yet, a decade and half later, nobody had capitalized on that untapped market. If these references actually showed a reasonable expectation of success, then one would expect there to have been at least one device that could actually determine oxygen saturation at the wrist. Indeed, despite citing numerous aspirational or self-serving disclosures, Apple and Anthony could not cite even a single device that actually determined oxygen saturation at the wrist. Instead, as the Withings Pulse O2 (EX1057) shows, the state-of-the-art device before the '745 Patent had an awkward, "seriously annoying" design where the device was worn on the wrist, yet had to be removed and placed on the finger in order to determine SpO_2. EX1057, 5. This shows that there was a long-felt but unmet need for determining oxygen saturation at the

MASIMO 2122
Apple v. Masimo
IPR2024-00241

[redacted]

wrist, and strongly indicates that the '745 Patent claims would not have been obvious.

B. The Testimony of Apple's Engineers at the Relevant Time Shows that There Was No Reasonable Expectation of Success

82. In my original declarations (both EX1003 and EX2070), I explained that Apple engineers' testimony during the ITC Investigation showed that there was no reasonable expectation of success in determining oxygen saturation at the wrist. *See* EX2070, ¶¶20-34; EX2002-1291, ¶¶177-192; EX2002-1465 ¶¶184-200. Apple and Anthony now argue that (1) Apple's engineers did not testify at the ITC from the perspective of a POSITA, (2) that "there is no evidence that the engineers were even aware (as a POSITA would have been) of the trove of prior art references and studies that had established the feasibility of determining oxygen saturation at the wrist," and (3) that the challenges Apple's engineers faced were related to other issues like [redacted] Reply, 20-21. I disagree with these arguments.

83. Apple's suggestion that its engineers did not testify at the ITC from the perspective of a POSITA is baffling. There is no question that Apple's engineers met the definition of a POSITA at the time of the '745 Patent. The level

MASIMO 2122
Apple v. Masimo
IPR2024-00241

[redacted]

of ordinary skill that is applicable in these proceedings requires a "Bachelor of Science degree in an academic discipline emphasizing the design of electrical, computer, or software technologies, in combination with training or at least one to two years of related work experience with capture and processing of data or information, including but not limited to physiological monitoring technologies. … Alternatively, the person could have also had a Master of Science degree in a relevant academic discipline with less than a year of related work experience in the same discipline." 1291 Petition, 5-6. Each of Apple's engineers who testified at the ITC exceeded these qualifications. For example, Dr. Paul Mannheimer has a Ph.D. in Biomedical Engineering and had spent ***over twenty years designing pulse oximeters*** at one of Masimo's major competitors, Nellcor, and ***considered his specialty to be the physio-optics of pulse oximetry***. EX2077, 994:2-25, 1009:1-8; EX2080, 180:22-181:4; *see also* EX2070, ¶22. Mannheimer joined Apple in 2014, thus he more than met the requirements for a POSITA before the '745 Patent filing date in 2015. EX2077, 996:9-997:8. The other engineers similarly exceeded the POSITA qualifications:

- Dr. Stephen Waydo:
    - Ph.D. in Control and Dynamical Systems from Caltech. EX2078, 919:9-14.

MASIMO 2122
Apple v. Masimo
IPR2024-00241

[redacted]

- Four years of experience working on developing a noninvasive glucose measuring device. EX2078, 920:3-6.

- Mr. Brian Land:
  - Master's degree in Material Science and Engineering from Stanford. EX2076, 952:19-953:17.
  - Twelve years of experience designing sensors. *Id.*
  - Head of the entire Health Sensing Hardware team of over 50 engineers at Apple. *Id.* at 954:4-956:8.

- Dr. Tao Shui:
  - Ph.D. [redacted] EX2082, 9:20-11:8.

84. Apple and Anthony also argue that "no record evidence indicates … that the engineers were even aware of the wealth of prior art references in the field that confirm the feasibility of measuring oxygen saturation at the wrist." EX1042, ¶39; Reply, 20. Apple does not explain how its own highly experienced and educated engineers with access to practically unlimited research and development resources at Apple would have been ignorant of what it now calls a "wealth of prior art references" and that were "well-known in the art." EX1042, ¶¶39, 48.

85. Apple's documents show that [redacted]

MASIMO 2122
Apple v. Masimo
IPR2024-00241

EX2089, 2.

EX2089, 2.

86. Apple's documents and engineer testimony also show that

[redacted]

EX2086, 3. Apple's and Anthony's suggestion that its own engineers were ignorant does not comport with their engineers' testimony and their research and development documents.

87. Finally, Apple and Anthony argue that Apple's engineers had a reasonable expectation of success in determining oxygen saturation at the wrist, but that their testimony about the challenges they faced were about other issues unrelated to the claims. I disagree. Apple claims the testimony I cited was taken out of context, but the testimony I cited was about Apple's engineers work in determining the feasibility of determining oxygen saturation at the wrist. It was at that initial feasibility determination step that Mannheimer, with his over twenty years of experience directly with pulse oximetry, rolled his eyes, thought to

MASIMO 2122
Apple v. Masimo
IPR2024-00241

himself, "good luck with that," and [redacted] *See* EX2070, ¶23 (citing Mannheimer testimony); EX2080, 173:9-174:6.

88. Anthony relied on testimony that was clearly not about the oxygen saturation feature. For example, Anthony quotes Brian Land's testimony that they had to "make a product that checked all the boxes of low power, fit in this tiny form factor, worked well across all the use cases." EX1042, ¶42 (citing EX2076, 958:19-24). But Land was talking about the challenges they faced in developing the original Series 0 Apple Watch. *See* EX2076, 957:18-960:2.

89. Apple's Reply also argues that [redacted] 1291 Reply, 21; 1465 Reply, 19 ("[redacted]"). But that argument is irrelevant because [redacted] Apple's website even expressly states that "Blood Oxygen app measurements ***are not intended for medical use***, including self-diagnoses or consultation with a doctor, and are only designed for general fitness and wellness purposes." EX2028, 21.

90. Anthony also relies on testimony from Dr. Saahil Mehra to suggest that Apple faced challenges due to the "[redacted]" of the watch. EX1042, ¶42B (page 60). But as I already explained in my original declaration, EX2070, Mehra was not involved in the initial research and development of the feature.

MASIMO 2122
Apple v. Masimo
IPR2024-00241

[redacted]

EX2070, ¶37. Mehra testified that he began working on the blood oxygen feature for the Apple Watch "around mid 2018 ***after the early prototyping feasibility had been established***, and they were looking for my expertise to help integrate this feature into a system in the Apple Watch." EX2008, 852:1-6. Mehra's testimony is not relevant to the initial skepticism and difficulties Apple's engineers faced in determining whether oxygen saturation at the wrist was feasible at all.

91. Anthony also cited testimony from Waydo about "[redacted]" EX1042, ¶46 (citing EX2081, 173:13-174:8). That testimony was about [redacted], not the oxygen saturation sensor in the Apple Watch. EX2081, 172:12-174:8. Moreover, Waydo testified that the [redacted]. EX2078, 926:23-927:5, 927:19-928:8. Anthony's suggestion that Apple's challenges with determining oxygen saturation at the wrist were due to challenges in [redacted] is wrong.

92. Anthony also cites testimony from Mannheimer that "[redacted]." EX1042, ¶47 (citing EX2077, 1015:13-1016:1). But Anthony did not address the

MASIMO 2122
Apple v. Masimo
IPR2024-00241

[redacted]

fact that [redacted]

[redacted]

EX2085, 9. [redacted] *Id.*

93. Finally, as a general matter, the fact that Apple's engineers also faced additional challenges in developing the oxygen saturation sensor for the Apple Watch does not negate the very real challenges they described in determining whether such measurements at the wrist were feasible at all, or the clear skepticism that highly experienced engineers like Mannheimer expressed about the idea in late 2014/early 2015, right before the '745 Patent was filed. The challenges that

MASIMO 2122
Apple v. Masimo
IPR2024-00241

Apple's engineers faced with respect to

EX2083, 7.

94. Moreover, the challenges with are also challenges that any

MASIMO 2122
Apple v. Masimo
IPR2024-00241

[redacted]

POSITA would have faced in trying to modify Iwamiya and Sarantos or Sarantos and Shie to determine oxygen saturation at the wrist. Iwamiya and Sarantos are both references that discuss wrist-worn pulse sensors, and the challenges that Apple's engineers faced with [redacted] would have been equally applicable to Iwamiya and Sarantos. If anything, Anthony's reliance on such testimony only confirms that there would not have been a reasonable expectation of success in modifying Iwamiya or Sarantos to determine oxygen saturation at the wrist.

95. Accordingly, Apple's and Anthony's arguments that try to downplay the testimony of Apple's engineers are irrelevant because they (1) rely on testimony not related to the oxygen saturation feature, (2) rely on testimony by engineers who were not involved in the research into the feasibility of oxygen saturation determinations at the wrist, (3) conflate later development difficulties with the earlier problems of feasibility, (4) suggest that Apple's engineers faced difficulties with the oxygen saturation feature relating [redacted]

MASIMO 2122
Apple v. Masimo
IPR2024-00241

[redacted]

APPENDIX A

The following is a copy of the legal standards set forth in my original declaration, EX2002-1291, ¶¶20-27:

Claim Construction

I understand that, in assessing the patentability of a patent claim, the Patent Office generally construes claim terms by giving them their ordinary and customary meaning, as they would have been understood by a POSITA at the time of the invention in view of the intrinsic record (patent specification and file history). However, I understand that the inventors may, in the patent specification, expressly define a claim term to have a meaning that differs from the term's ordinary and customary meaning. I also understand that the inventors may disavow or disclaim certain claim scope, thereby departing from the ordinary and customary meaning, when the intrinsic record demonstrates that a clear and unambiguous disavowal or disclaimer has occurred. I understand that extrinsic evidence, such as relevant technical literature and dictionaries, may be useful in ascertaining how a POSITA would have understood a claim term, but the intrinsic record is the primary source for determining the meaning of claim terms. For the purposes of this review, and to the extent necessary, I have interpreted each claim term in accordance with the principles set forth in this paragraph.

Obviousness

MASIMO 2122
Apple v. Masimo
IPR2024-00241

[redacted]

I understand that a claim is unpatentable as "obvious" under 35 U.S.C. § 103 if the claimed subject matter as a whole would have been obvious to a POSITA at the time of the invention. I also understand that an obviousness analysis takes into account the following factors, which are sometimes referred to as the *Graham* factors: (1) the scope and content of the prior art, (2) the differences between the claimed subject matter and the prior art, (3) the level of ordinary skill in the art at the time of the invention, and (4) "objective indicia of non-obviousness," also referred to as secondary considerations of non-obviousness. I understand that these objective indicia include considerations such as whether there was: (i) any unexpected result(s); (ii) skepticism of the invention; (iii) a teaching away from the invention; (iv) failure of others to find the solution(s) provided by the claimed invention; (v) copying by other companies; (vi) commercial success due to the merits of the claimed invention; (vii) praise by others for the invention; and (viii) a long-felt need in the industry for the claimed invention.

In determining the scope and content of the prior art, it is my understanding that a reference is considered appropriate prior art if it falls within the field of the inventor's endeavor. In addition, a reference is appropriate prior art if it is reasonably pertinent to the particular problem with which the inventor was involved. A reference is reasonably pertinent if it logically would have commended itself to an inventor's attention in considering his or her problem. If a

MASIMO 2122
Apple v. Masimo
IPR2024-00241

[redacted]

reference relates to the same problem as the claimed invention, that supports use of the reference as prior art in an obviousness analysis.

To assess the differences between prior art and the claimed subject matter, it is my understanding that 35 U.S.C. § 103 requires the claimed invention to be considered as a whole. This "as a whole" assessment requires showing that a POSITA at the time of invention, confronted by the same problems as the inventor and with no knowledge of the claimed invention, would have selected the elements from the prior art and combined them in the claimed manner.

It is my further understanding that the Supreme Court has recognized several rationales for combining references or modifying a reference to show obviousness of claimed subject matter. Some of these rationales include: combining prior art elements according to known methods to yield predictable results; simple substitution of one known element for another to obtain predictable results; a predictable use of prior art elements according to their established functions; applying a known technique to a known device (method or product) ready for improvement to yield predictable results; choosing from a finite number of identified, predictable solutions, with a reasonable expectation of success; and some teaching, suggestion, or motivation that would have led a POSITA to modify the prior art reference or to combine prior art reference teachings to arrive at the claimed invention.

[redacted]

I understand that the obviousness analysis must be performed from the perspective of a POSITA at the time of the alleged invention. I understand this requirement is to help avoid using impermissible hindsight in the analysis. I further understand that the claims of the patent-at-issue must not be used to provide a road map for obviousness; instead, the claims would have been obvious only if a POSITA, without knowledge of the patent-at-issue, would have been motivated to combine the teachings of the prior art to arrive at the claimed invention and had a reasonable expectation of success in doing so.

I understand that an assessment of what a reference discloses or teaches—for purposes of an anticipation analysis or an obviousness analysis—must be conducted from the perspective of a POSITA at the time of the invention. In other words, a reference discloses or teaches a claim limitation if a POSITA would, at the relevant time, interpret the reference as expressly, implicitly, or inherently disclosing the claim limitation. I further understand that a reference does not need to use the exact language of the claim to disclose a claim limitation. I also understand that something is only "inherent in," and therefore taught by, the prior art if it necessarily flows from the explicit disclosure of the prior art. I understand the fact that a certain result or characteristic may be present in the prior art is not sufficient to establish inherency.

MASIMO 2122
Apple v. Masimo
IPR2024-00241

[redacted]

I understand that the obviousness analysis also must show that the prior art, taken as a whole, enables a POSITA to make and use the claimed invention.

MASIMO 2122
Apple v. Masimo
IPR2024-00241