US010687743B1

(12) **United States Patent**
Al-Ali

(10) **Patent No.: US 10,687,743 B1**
(45) **Date of Patent: *Jun. 23, 2020**

(54) **PHYSIOLOGICAL MEASUREMENT DEVICES, SYSTEMS, AND METHODS**

(71) Applicant: **MASIMO CORPORATION**, Irvine, CA (US)

(72) Inventor: **Ammar Al-Ali**, San Juan Capistrano, CA (US)

(73) Assignee: **Masimo Corporation**, Irvine, CA (US)

(*) Notice: Subject to any disclaimer, the term of this patent is extended or adjusted under 35 U.S.C. 154(b) by 0 days.

This patent is subject to a terminal disclaimer.

(21) Appl. No.: **16/791,955**

(22) Filed: **Feb. 14, 2020**

Related U.S. Application Data

(63) Continuation of application No. 16/532,061, filed on Aug. 5, 2019, which is a continuation of application
(Continued)

(51) **Int. Cl.**
A61B 5/1455 (2006.01)
A61B 5/145 (2006.01)
(Continued)

(52) **U.S. Cl.**
CPC ***A61B 5/14552*** (2013.01); ***A61B 5/0002*** (2013.01); ***A61B 5/02416*** (2013.01);
(Continued)

(58) **Field of Classification Search**
None
See application file for complete search history.

(56) **References Cited**

U.S. PATENT DOCUMENTS

4,960,128 A 10/1990 Gordon et al.
4,964,408 A 10/1990 Hink et al.
(Continued)

FOREIGN PATENT DOCUMENTS

CN 101484065 B 7/2009
CN 101564290 B 10/2009
(Continued)

OTHER PUBLICATIONS

US 8,845,543 B2, 09/2014, Diab et al. (withdrawn)
(Continued)

Primary Examiner — Eric F Winakur
Assistant Examiner — Marjan Fardanesh
(74) *Attorney, Agent, or Firm* — Knobbe, Martens, Olson & Bear, LLP

(57) **ABSTRACT**

A non-invasive, optical-based physiological monitoring system is disclosed. One embodiment includes an emitter configured to emit light. A diffuser is configured to receive and spread the emitted light, and to emit the spread light at a tissue measurement site. The system further includes a concentrator configured to receive the spread light after it has been attenuated by or reflected from the tissue measurement site. The concentrator is also configured to collect and concentrate the received light and to emit the concentrated light to a detector. The detector is configured to detect the concentrated light and to transmit a signal representative of the detected light. A processor is configured to receive the transmitted signal and to determine a physiological parameter, such as, for example, arterial oxygen saturation, in the tissue measurement site.

25 Claims, 7 Drawing Sheets

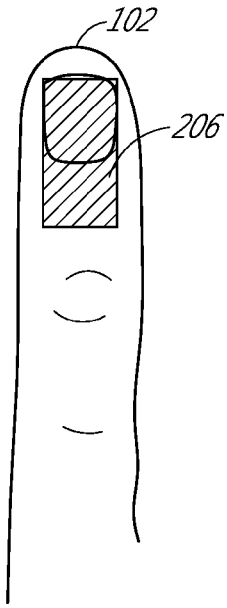

APPLE 1001

Related U.S. Application Data

No. 15/195,199, filed on Jun. 28, 2016, now Pat. No. 10,448,871.

(60) Provisional application No. 62/188,430, filed on Jul. 2, 2015.

(51) **Int. Cl.**
A61B 5/024 (2006.01)
A61B 5/00 (2006.01)

(52) **U.S. Cl.**
CPC ***A61B 5/14532*** (2013.01); ***A61B 5/14546*** (2013.01); ***A61B 5/4875*** (2013.01); ***A61B 5/6826*** (2013.01); ***A61B 5/7278*** (2013.01); ***A61B 5/742*** (2013.01); *A61B 2562/04* (2013.01)

(56) **References Cited**

U.S. PATENT DOCUMENTS

5,041,187 A 8/1991 Hink et al.
5,069,213 A 12/1991 Polczynski
5,099,842 A 3/1992 Mannheimer et al.
5,158,091 A 10/1992 Butterfield et al.
5,163,438 A 11/1992 Gordon et al.
5,203,329 A 4/1993 Takatani et al.
5,228,449 A 7/1993 Christ et al.
5,319,355 A 6/1994 Russek
5,337,744 A 8/1994 Branigan
5,341,805 A 8/1994 Stavridi et al.
D353,195 S 12/1994 Savage et al.
D353,196 S 12/1994 Savage et al.
5,377,676 A 1/1995 Vari et al.
D359,546 S 6/1995 Savage et al.
5,431,170 A 7/1995 Mathews
D361,840 S 8/1995 Savage et al.
D362,063 S 9/1995 Savage et al.
5,452,717 A 9/1995 Branigan et al.
D363,120 S 10/1995 Savage et al.
5,456,252 A 10/1995 Vari et al.
5,462,051 A 10/1995 Oka et al.
5,479,934 A 1/1996 Imran
5,482,036 A 1/1996 Diab et al.
5,490,505 A 2/1996 Diab et al.
5,494,043 A 2/1996 O'Sullivan et al.
5,497,771 A 3/1996 Rosenheimer
5,533,511 A 7/1996 Kaspari et al.
5,534,851 A 7/1996 Russek
5,561,275 A 10/1996 Savage et al.
5,562,002 A 10/1996 Lalin
5,564,429 A 10/1996 Bornn et al.
5,584,296 A 12/1996 Cui et al.
5,590,649 A 1/1997 Caro et al.
5,601,079 A 2/1997 Wong et al.
5,602,924 A 2/1997 Durand et al.
5,623,925 A 4/1997 Swenson et al.
5,632,272 A 5/1997 Diab et al.
5,638,816 A 6/1997 Kiani-Azarbayjany et al.
5,638,818 A 6/1997 Diab et al.
5,645,440 A 7/1997 Tobler et al.
5,685,299 A 11/1997 Diab et al.
5,699,808 A 12/1997 John
5,729,203 A 3/1998 Oka et al.
D393,830 S 4/1998 Tobler et al.
5,743,262 A 4/1998 Lepper, Jr. et al.
5,758,644 A 6/1998 Diab et al.
5,760,910 A 6/1998 Lepper, Jr. et al.
5,769,785 A 6/1998 Diab et al.
5,782,757 A 7/1998 Diab et al.
5,785,659 A 7/1998 Caro et al.
5,791,347 A 8/1998 Flaherty et al.
5,792,052 A 8/1998 Isaacson et al.
5,800,349 A 9/1998 Isaacson et al.
5,810,734 A 9/1998 Caro et al.
5,823,950 A 10/1998 Diab et al.
5,830,131 A 11/1998 Caro et al.
5,830,137 A 11/1998 Scharf
5,833,618 A 11/1998 Caro et al.
5,860,919 A 1/1999 Kiani-Azarbayjany et al.
5,890,929 A 4/1999 Mills et al.
5,904,654 A 5/1999 Wohltmann et al.
5,919,134 A 7/1999 Diab
5,934,925 A 8/1999 Tobler et al.
5,940,182 A 8/1999 Lepper, Jr. et al.
5,987,343 A 11/1999 Kinast
5,995,855 A 11/1999 Kiani et al.
5,997,343 A 12/1999 Mills et al.
6,002,952 A 12/1999 Diab et al.
6,011,986 A 1/2000 Diab et al.
6,027,452 A 2/2000 Flaherty et al.
6,036,642 A 3/2000 Diab et al.
6,045,509 A 4/2000 Caro et al.
6,067,462 A 5/2000 Diab et al.
6,081,735 A 6/2000 Diab et al.
6,088,607 A 7/2000 Diab et al.
6,102,856 A 8/2000 Groff et al.
6,110,522 A 8/2000 Lepper, Jr. et al.
6,124,597 A 9/2000 Shehada
6,128,521 A 10/2000 Marro et al.
6,129,675 A 10/2000 Jay
6,144,868 A 11/2000 Parker
6,151,516 A 11/2000 Kiani-Azarbayjany et al.
6,152,754 A 11/2000 Gerhardt et al.
6,157,850 A 12/2000 Diab et al.
6,165,005 A 12/2000 Mills et al.
6,184,521 B1 2/2001 Coffin, IV et al.
6,206,830 B1 3/2001 Diab et al.
6,223,063 B1 4/2001 Chaiken et al.
6,229,856 B1 5/2001 Diab et al.
6,232,609 B1 5/2001 Snyder et al.
6,236,872 B1 5/2001 Diab et al.
6,241,680 B1 6/2001 Miwa
6,241,683 B1 6/2001 Macklem et al.
6,253,097 B1 6/2001 Aronow et al.
6,256,523 B1 7/2001 Diab et al.
6,263,222 B1 7/2001 Diab et al.
6,278,522 B1 8/2001 Lepper, Jr. et al.
6,280,213 B1 8/2001 Tobler et al.
6,285,896 B1 9/2001 Tobler et al.
6,301,493 B1 10/2001 Marro et al.
6,308,089 B1 10/2001 von der Ruhr et al.
6,317,627 B1 11/2001 Ennen et al.
6,321,100 B1 11/2001 Parker
6,325,761 B1 12/2001 Jay
6,334,065 B1 12/2001 Al-Ali et al.
6,343,223 B1 1/2002 Chin et al.
6,343,224 B1 1/2002 Parker
6,349,228 B1 2/2002 Kiani et al.
6,356,203 B1 3/2002 Halleck et al.
6,360,114 B1 3/2002 Diab et al.
6,368,283 B1 4/2002 Xu et al.
6,371,921 B1 4/2002 Caro et al.
6,377,829 B1 4/2002 Al-Ali
6,388,240 B2 5/2002 Schulz et al.
6,397,091 B2 5/2002 Diab et al.
6,430,437 B1 8/2002 Marro
6,430,525 B1 8/2002 Weber et al.
6,463,311 B1 10/2002 Diab
6,470,199 B1 10/2002 Kopotic et al.
6,501,975 B2 12/2002 Diab et al.
6,505,059 B1 1/2003 Kollias et al.
6,515,273 B2 2/2003 Al-Ali
6,519,487 B1 2/2003 Parker
6,525,386 B1 2/2003 Mills et al.
6,526,300 B1 2/2003 Kiani et al.
6,541,756 B2 4/2003 Schulz et al.
6,542,764 B1 4/2003 Al-Ali et al.
6,580,086 B1 6/2003 Schulz et al.
6,584,336 B1 6/2003 Ali et al.
6,595,316 B2 7/2003 Cybulski et al.
6,597,932 B2 7/2003 Tian et al.
6,597,933 B2 7/2003 Kiani et al.
6,606,511 B1 8/2003 Ali et al.

(56) **References Cited**

U.S. PATENT DOCUMENTS

6,632,181	B2	10/2003	Flaherty et al.
6,639,668	B1	10/2003	Trepagnier
6,640,116	B2	10/2003	Diab
6,643,530	B2	11/2003	Diab et al.
6,650,917	B2	11/2003	Diab et al.
6,654,624	B2	11/2003	Diab et al.
6,658,276	B2	12/2003	Kiani et al.
6,661,161	B1	12/2003	Lanzo et al.
6,671,526	B1	12/2003	Aoyagi et al.
6,671,531	B2	12/2003	Al-Ali et al.
6,678,543	B2	1/2004	Diab et al.
6,684,090	B2	1/2004	Ali et al.
6,684,091	B2	1/2004	Parker
6,697,656	B1	2/2004	Al-Ali
6,697,657	B1	2/2004	Shehada et al.
6,697,658	B2	2/2004	Al-Ali
RE38,476	E	3/2004	Diab et al.
6,699,194	B1	3/2004	Diab et al.
6,714,804	B2	3/2004	Al-Ali et al.
RE38,492	E	4/2004	Diab et al.
6,721,582	B2	4/2004	Trepagnier et al.
6,721,585	B1	4/2004	Parker
6,725,075	B2	4/2004	Al-Ali
6,728,560	B2	4/2004	Kollias et al.
6,735,459	B2	5/2004	Parker
6,745,060	B2	6/2004	Diab et al.
6,760,607	B2	7/2004	Al-Ali
6,770,028	B1	8/2004	Ali et al.
6,771,994	B2	8/2004	Kiani et al.
6,785,568	B2	8/2004	Chance
6,792,300	B1	9/2004	Diab et al.
6,801,799	B2	10/2004	Mendelson
6,813,511	B2	11/2004	Diab et al.
6,816,741	B2	11/2004	Diab
6,822,564	B2	11/2004	Al-Ali
6,826,419	B2	11/2004	Diab et al.
6,830,711	B2	12/2004	Mills et al.
6,831,266	B2	12/2004	Paritsky et al.
6,850,787	B2	2/2005	Weber et al.
6,850,788	B2	2/2005	Al-Ali
6,852,083	B2	2/2005	Caro et al.
6,861,639	B2	3/2005	Al-Ali
6,898,452	B2	5/2005	Al-Ali et al.
6,920,345	B2	7/2005	Al-Ali et al.
6,931,268	B1	8/2005	Kiani-Azarbayjany et al.
6,934,570	B2	8/2005	Kiani et al.
6,939,305	B2	9/2005	Flaherty et al.
6,943,348	B1	9/2005	Coffin, IV
6,950,687	B2	9/2005	Al-Ali
6,961,598	B2	11/2005	Diab
6,970,792	B1	11/2005	Diab
6,979,812	B2	12/2005	Al-Ali
6,985,764	B2	1/2006	Mason et al.
6,993,371	B2	1/2006	Kiani et al.
6,996,427	B2	2/2006	Ali et al.
6,999,904	B2	2/2006	Weber et al.
7,003,338	B2	2/2006	Weber et al.
7,003,339	B2	2/2006	Diab et al.
7,015,451	B2	3/2006	Dalke et al.
7,024,233	B2	4/2006	Ali et al.
7,027,849	B2	4/2006	Al-Ali
7,030,749	B2	4/2006	Al-Ali
7,039,449	B2	5/2006	Al-Ali
7,041,060	B2	5/2006	Flaherty et al.
7,044,918	B2	5/2006	Diab
7,048,687	B1	5/2006	Reuss et al.
7,060,963	B2	6/2006	Maegawa et al.
7,067,893	B2	6/2006	Mills et al.
7,096,052	B2	8/2006	Mason et al.
7,096,054	B2	8/2006	Abdul-Hafiz et al.
7,132,641	B2	11/2006	Schulz et al.
7,142,901	B2	11/2006	Kiani et al.
7,149,561	B2	12/2006	Diab
7,186,966	B2	3/2007	Al-Ali
7,190,261	B2	3/2007	Al-Ali
7,215,984	B2	5/2007	Diab
7,215,986	B2	5/2007	Diab
7,221,971	B2	5/2007	Diab
7,225,006	B2	5/2007	Al-Ali et al.
7,225,007	B2	5/2007	Al-Ali
RE39,672	E	6/2007	Shehada et al.
7,227,156	B2	6/2007	Colvin, Jr. et al.
7,239,905	B2	7/2007	Kiani-Azarbayjany et al.
7,245,953	B1	7/2007	Parker
7,254,429	B2	8/2007	Schurman et al.
7,254,431	B2	8/2007	Al-Ali
7,254,433	B2	8/2007	Diab et al.
7,254,434	B2	8/2007	Schulz et al.
7,272,425	B2	9/2007	Al-Ali
7,274,955	B2	9/2007	Kiani et al.
D554,263	S	10/2007	Al-Ali
7,280,858	B2	10/2007	Al-Ali et al.
7,289,835	B2	10/2007	Mansfield et al.
7,292,883	B2	11/2007	De Felice et al.
7,295,866	B2	11/2007	Al-Ali
7,328,053	B1	2/2008	Diab et al.
7,332,784	B2	2/2008	Mills et al.
7,340,287	B2	3/2008	Mason et al.
7,341,559	B2	3/2008	Schulz et al.
7,343,186	B2	3/2008	Lamego et al.
D566,282	S	4/2008	Al-Ali et al.
7,355,512	B1	4/2008	Al-Ali
7,356,365	B2	4/2008	Schurman
7,371,981	B2	5/2008	Abdul-Hafiz
7,373,193	B2	5/2008	Al-Ali et al.
7,373,194	B2	5/2008	Weber et al.
7,376,453	B1	5/2008	Diab et al.
7,377,794	B2	5/2008	Al Ali et al.
7,377,899	B2	5/2008	Weber et al.
7,383,070	B2	6/2008	Diab et al.
7,415,297	B2	8/2008	Al-Ali et al.
7,428,432	B2	9/2008	Ali et al.
7,438,683	B2	10/2008	Al-Ali et al.
7,440,787	B2	10/2008	Diab
7,454,240	B2	11/2008	Diab et al.
7,467,002	B2	12/2008	Weber et al.
7,469,157	B2	12/2008	Diab et al.
7,471,969	B2	12/2008	Diab et al.
7,471,971	B2	12/2008	Diab et al.
7,483,729	B2	1/2009	Al-Ali et al.
7,483,730	B2	1/2009	Diab et al.
7,489,958	B2	2/2009	Diab et al.
7,496,391	B2	2/2009	Diab et al.
7,496,393	B2	2/2009	Diab et al.
D587,657	S	3/2009	Al-Ali et al.
7,499,741	B2	3/2009	Diab et al.
7,499,835	B2	3/2009	Weber et al.
7,500,950	B2	3/2009	Al-Ali et al.
7,509,154	B2	3/2009	Diab et al.
7,509,494	B2	3/2009	Al-Ali
7,510,849	B2	3/2009	Schurman et al.
7,519,327	B2	4/2009	White
7,526,328	B2	4/2009	Diab et al.
7,530,942	B1	5/2009	Diab
7,530,949	B2	5/2009	Al Ali et al.
7,530,955	B2	5/2009	Diab et al.
7,563,110	B2	7/2009	Al-Ali et al.
7,596,398	B2	9/2009	Al-Ali et al.
7,601,123	B2	10/2009	Tweed et al.
7,613,490	B2	11/2009	Sarussi et al.
7,618,375	B2	11/2009	Flaherty
D606,659	S	12/2009	Kiani et al.
7,647,083	B2	1/2010	Al-Ali et al.
D609,193	S	2/2010	Al-Ali et al.
D614,305	S	4/2010	Al-Ali et al.
RE41,317	E	5/2010	Parker
7,726,209	B2	6/2010	Ruotoistenmäki
7,729,733	B2	6/2010	Al-Ali et al.
7,734,320	B2	6/2010	Al-Ali
7,740,588	B1	6/2010	Sciarra
7,740,589	B2	6/2010	Maschke et al.
7,761,127	B2	7/2010	Al-Ali et al.
7,761,128	B2	7/2010	Al-Ali et al.
7,764,982	B2	7/2010	Dalke et al.

(56) **References Cited**

U.S. PATENT DOCUMENTS

D621,516	S	8/2010	Kiani et al.
7,791,155	B2	9/2010	Diab
7,801,581	B2	9/2010	Diab
7,822,452	B2	10/2010	Schurman et al.
RE41,912	E	11/2010	Parker
7,844,313	B2	11/2010	Kiani et al.
7,844,314	B2	11/2010	Al-Ali
7,844,315	B2	11/2010	Al-Ali
7,862,523	B2	1/2011	Ruotoistenmaki
7,865,222	B2	1/2011	Weber et al.
7,869,849	B2	1/2011	Ollerdessen et al.
7,873,497	B2	1/2011	Weber et al.
7,880,606	B2	2/2011	Al-Ali
7,880,626	B2	2/2011	Al-Ali et al.
7,891,355	B2	2/2011	Al-Ali et al.
7,894,868	B2	2/2011	Al-Ali et al.
7,899,507	B2	3/2011	Al-Ali et al.
7,899,510	B2	3/2011	Hoarau
7,899,518	B2	3/2011	Trepagnier et al.
7,904,132	B2	3/2011	Weber et al.
7,909,772	B2	3/2011	Popov et al.
7,910,875	B2	3/2011	Al-Ali
7,919,713	B2	4/2011	Al-Ali et al.
7,937,128	B2	5/2011	Al-Ali
7,937,129	B2	5/2011	Mason et al.
7,937,130	B2	5/2011	Diab et al.
7,941,199	B2	5/2011	Kiani
7,951,086	B2	5/2011	Flaherty et al.
7,957,780	B2	6/2011	Lamego et al.
7,962,188	B2	6/2011	Kiani et al.
7,962,190	B1	6/2011	Diab et al.
7,976,472	B2	7/2011	Kiani
7,988,637	B2	8/2011	Diab
7,990,382	B2	8/2011	Kiani
7,991,446	B2	8/2011	Ali et al.
8,000,761	B2	8/2011	Al-Ali
8,008,088	B2	8/2011	Bellott et al.
RE42,753	E	9/2011	Kiani-Azarbayjany et al.
8,019,400	B2	9/2011	Diab et al.
8,028,701	B2	10/2011	Al-Ali et al.
8,029,765	B2	10/2011	Bellott et al.
8,036,727	B2	10/2011	Schurman et al.
8,036,728	B2	10/2011	Diab et al.
8,046,040	B2	10/2011	Ali et al.
8,046,041	B2	10/2011	Diab et al.
8,046,042	B2	10/2011	Diab et al.
8,048,040	B2	11/2011	Kiani
8,050,728	B2	11/2011	Al-Ali et al.
8,071,935	B2	12/2011	Besko et al.
RE43,169	E	2/2012	Parker
8,118,620	B2	2/2012	Al-Ali et al.
8,126,528	B2	2/2012	Diab et al.
8,128,572	B2	3/2012	Diab et al.
8,130,105	B2	3/2012	Al-Ali et al.
8,145,287	B2	3/2012	Diab et al.
8,150,487	B2	4/2012	Diab et al.
8,175,672	B2	5/2012	Parker
8,180,420	B2	5/2012	Diab et al.
8,182,443	B1	5/2012	Kiani
8,185,180	B2	5/2012	Diab et al.
8,190,223	B2	5/2012	Al-Ali et al.
8,190,227	B2	5/2012	Diab et al.
8,203,438	B2	6/2012	Kiani et al.
8,203,704	B2	6/2012	Merritt et al.
8,204,566	B2	6/2012	Schurman et al.
8,219,172	B2	7/2012	Schurman et al.
8,224,411	B2	7/2012	Al-Ali et al.
8,228,181	B2	7/2012	Al-Ali
8,229,533	B2	7/2012	Diab et al.
8,233,955	B2	7/2012	Al-Ali et al.
8,244,325	B2	8/2012	Al-Ali et al.
8,255,026	B1	8/2012	Al-Ali
8,255,027	B2	8/2012	Al-Ali et al.
8,255,028	B2	8/2012	Al-Ali et al.
8,260,577	B2	9/2012	Weber et al.
8,265,723	B1	9/2012	McHale et al.
8,274,360	B2	9/2012	Sampath et al.
8,280,469	B2	10/2012	Baker, Jr. et al.
8,280,473	B2	10/2012	Al-Ali
8,289,130	B2	10/2012	Nakajima et al.
8,301,217	B2	10/2012	Al-Ali et al.
8,306,596	B2	11/2012	Schurman et al.
8,310,336	B2	11/2012	Muhsin et al.
8,315,683	B2	11/2012	Al-Ali et al.
RE43,860	E	12/2012	Parker
8,337,403	B2	12/2012	Al-Ali et al.
8,346,330	B2	1/2013	Lamego
8,353,842	B2	1/2013	Al-Ali et al.
8,355,766	B2	1/2013	MacNeish, III et al.
8,359,080	B2	1/2013	Diab et al.
8,364,223	B2	1/2013	Al-Ali et al.
8,364,226	B2	1/2013	Diab et al.
8,364,389	B2	1/2013	Dorogusker et al.
8,374,665	B2	2/2013	Lamego
8,385,995	B2	2/2013	Al-Ali et al.
8,385,996	B2	2/2013	Smith et al.
8,388,353	B2	3/2013	Kiani et al.
8,399,822	B2	3/2013	Al-Ali
8,401,602	B2	3/2013	Kiani
8,405,608	B2	3/2013	Al-Ali et al.
8,414,499	B2	4/2013	Al-Ali et al.
8,418,524	B2	4/2013	Al-Ali
8,423,106	B2	4/2013	Lamego et al.
8,428,967	B2	4/2013	Olsen et al.
8,430,817	B1	4/2013	Al-Ali et al.
8,437,825	B2	5/2013	Dalvi et al.
8,452,364	B2	5/2013	Hannula et al.
8,455,290	B2	6/2013	Siskavich
8,457,703	B2	6/2013	Al-Ali
8,457,707	B2	6/2013	Kiani
8,463,349	B2	6/2013	Diab et al.
8,466,286	B2	6/2013	Bellot et al.
8,471,713	B2	6/2013	Poeze et al.
8,473,020	B2	6/2013	Kiani et al.
8,483,787	B2	7/2013	Al-Ali et al.
8,489,364	B2	7/2013	Weber et al.
8,496,595	B2	7/2013	Jornod
8,498,684	B2	7/2013	Weber et al.
8,504,128	B2	8/2013	Blank et al.
8,509,867	B2	8/2013	Workman et al.
8,515,509	B2	8/2013	Bruinsma et al.
8,515,515	B2	8/2013	McKenna et al.
8,523,781	B2	9/2013	Al-Ali
8,529,301	B2	9/2013	Al-Ali et al.
8,532,727	B2	9/2013	Ali et al.
8,532,728	B2	9/2013	Diab et al.
D692,145	S	10/2013	Al-Ali et al.
8,547,209	B2	10/2013	Kiani et al.
8,548,548	B2	10/2013	Al-Ali
8,548,549	B2	10/2013	Schurman et al.
8,548,550	B2	10/2013	Al-Ali et al.
8,560,032	B2	10/2013	Al-Ali et al.
8,560,034	B1	10/2013	Diab et al.
8,570,167	B2	10/2013	Al-Ali
8,570,503	B2	10/2013	Vo et al.
8,571,617	B2	10/2013	Reichgott et al.
8,571,618	B1	10/2013	Lamego et al.
8,571,619	B2	10/2013	Al-Ali et al.
8,577,431	B2	11/2013	Lamego et al.
8,581,732	B2	11/2013	Al-Ali et al.
8,584,345	B2	11/2013	Al-Ali et al.
8,588,880	B2	11/2013	Abdul-Hafiz et al.
8,591,426	B2	11/2013	Onoe et al.
8,600,467	B2	12/2013	Al-Ali et al.
8,606,342	B2	12/2013	Diab
8,615,290	B2	12/2013	Lin et al.
8,626,255	B2	1/2014	Al-Ali et al.
8,630,691	B2	1/2014	Lamego et al.
8,634,889	B2	1/2014	Al-Ali et al.
8,641,631	B2	2/2014	Sierra et al.
8,652,060	B2	2/2014	Al-Ali
8,655,004	B2	2/2014	Prest et al.
8,663,107	B2	3/2014	Kiani
8,666,468	B1	3/2014	Al-Ali

(56) **References Cited**

U.S. PATENT DOCUMENTS

8,667,967	B2	3/2014	Al-Ali et al.
8,670,811	B2	3/2014	O'Reilly
8,670,814	B2	3/2014	Diab et al.
8,676,286	B2	3/2014	Weber et al.
8,682,407	B2	3/2014	Al-Ali
RE44,823	E	4/2014	Parker
RE44,875	E	4/2014	Kiani et al.
8,690,799	B2	4/2014	Telfort et al.
8,700,111	B2	4/2014	Leboeuf et al.
8,700,112	B2	4/2014	Kiani
8,702,627	B2	4/2014	Telfort et al.
8,706,179	B2	4/2014	Parker
8,712,494	B1	4/2014	MacNeish, III et al.
8,715,206	B2	5/2014	Telfort et al.
8,718,735	B2	5/2014	Lamego et al.
8,718,737	B2	5/2014	Diab et al.
8,718,738	B2	5/2014	Blank et al.
8,720,249	B2	5/2014	Al-Ali
8,721,541	B2	5/2014	Al-Ali et al.
8,721,542	B2	5/2014	Al-Ali et al.
8,723,677	B1	5/2014	Kiani
8,740,792	B1	6/2014	Kiani et al.
8,754,776	B2	6/2014	Poeze et al.
8,755,535	B2	6/2014	Telfort et al.
8,755,856	B2	6/2014	Diab et al.
8,755,872	B1	6/2014	Marinow
8,760,517	B2	6/2014	Sarwar et al.
8,761,850	B2	6/2014	Lamego
8,764,671	B2	7/2014	Kiani
8,768,423	B2	7/2014	Shakespeare et al.
8,768,426	B2	7/2014	Haisley et al.
8,771,204	B2	7/2014	Telfort et al.
8,777,634	B2	7/2014	Kiani et al.
8,781,543	B2	7/2014	Diab et al.
8,781,544	B2	7/2014	Al-Ali et al.
8,781,549	B2	7/2014	Al-Ali et al.
8,788,003	B2	7/2014	Schurman et al.
8,790,268	B2	7/2014	Al-Ali
8,801,613	B2	8/2014	Al-Ali et al.
8,821,397	B2	9/2014	Al-Ali et al.
8,821,415	B2	9/2014	Al-Ali et al.
8,830,449	B1	9/2014	Lamego et al.
8,831,700	B2	9/2014	Schurman et al.
8,838,210	B2	9/2014	Wood et al.
8,840,549	B2	9/2014	Al-Ali et al.
8,847,740	B2	9/2014	Kiani et al.
8,849,365	B2	9/2014	Smith et al.
8,852,094	B2	10/2014	Al-Ali et al.
8,852,994	B2	10/2014	Wojtczuk et al.
8,868,147	B2	10/2014	Stippick et al.
8,868,150	B2	10/2014	Al-Ali et al.
8,870,792	B2	10/2014	Al-Ali et al.
8,886,271	B2	11/2014	Kiani et al.
8,888,539	B2	11/2014	Al-Ali et al.
8,888,708	B2	11/2014	Diab et al.
8,892,180	B2	11/2014	Weber et al.
8,897,847	B2	11/2014	Al-Ali
8,909,310	B2	12/2014	Lamego et al.
8,911,377	B2	12/2014	Al-Ali
8,912,909	B2	12/2014	Al-Ali et al.
8,920,317	B2	12/2014	Al-Ali et al.
8,920,332	B2	12/2014	Hong et al.
8,921,699	B2	12/2014	Al-Ali et al.
8,922,382	B2	12/2014	Al-Ali et al.
8,929,964	B2	1/2015	Al-Ali et al.
8,942,777	B2	1/2015	Diab et al.
8,948,834	B2	2/2015	Diab et al.
8,948,835	B2	2/2015	Diab
8,965,471	B2	2/2015	Lamego
8,983,564	B2	3/2015	Al-Ali
8,989,831	B2	3/2015	Al-Ali et al.
8,996,085	B2	3/2015	Kiani et al.
8,998,809	B2	4/2015	Kiani
9,028,429	B2	5/2015	Telfort et al.
9,037,207	B2	5/2015	Al-Ali et al.
9,060,721	B2	6/2015	Reichgott et al.
9,066,666	B2	6/2015	Kiani
9,066,680	B1	6/2015	Al-Ali et al.
9,072,437	B2	7/2015	Paalasmaa
9,072,474	B2	7/2015	Al-Ali et al.
9,078,560	B2	7/2015	Schurman et al.
9,081,889	B2	7/2015	Ingrassia, Jr. et al.
9,084,569	B2	7/2015	Weber et al.
9,095,316	B2	8/2015	Welch et al.
9,106,038	B2	8/2015	Telfort et al.
9,107,625	B2	8/2015	Telfort et al.
9,107,626	B2	8/2015	Al-Ali et al.
9,113,831	B2	8/2015	Al-Ali
9,113,832	B2	8/2015	Al-Ali
9,119,595	B2	9/2015	Lamego
9,131,881	B2	9/2015	Diab et al.
9,131,882	B2	9/2015	Al-Ali et al.
9,131,883	B2	9/2015	Al-Ali
9,131,917	B2	9/2015	Telfort et al.
9,138,180	B1	9/2015	Coverston et al.
9,138,182	B2	9/2015	Al-Ali et al.
9,138,192	B2	9/2015	Weber et al.
9,142,117	B2	9/2015	Muhsin et al.
9,153,112	B1	10/2015	Kiani et al.
9,153,121	B2	10/2015	Kiani et al.
9,161,696	B2	10/2015	Al-Ali et al.
9,161,713	B2	10/2015	Al-Ali et al.
9,167,995	B2	10/2015	Lamego et al.
9,176,141	B2	11/2015	Al-Ali et al.
9,186,102	B2	11/2015	Bruinsma et al.
9,192,312	B2	11/2015	Al-Ali
9,192,329	B2	11/2015	Al-Ali
9,192,351	B1	11/2015	Telfort et al.
9,195,385	B2	11/2015	Al-Ali et al.
9,210,566	B2	12/2015	Ziemianska et al.
9,211,072	B2	12/2015	Kiani
9,211,095	B1	12/2015	Al-Ali
9,218,454	B2	12/2015	Kiani et al.
9,226,696	B2	1/2016	Kiani
9,241,662	B2	1/2016	Al-Ali et al.
9,245,668	B1	1/2016	Vo et al.
9,259,185	B2	2/2016	Abdul-Hafiz et al.
9,267,572	B2	2/2016	Barker et al.
9,277,880	B2	3/2016	Poeze et al.
9,289,167	B2	3/2016	Diab et al.
9,295,421	B2	3/2016	Kiani et al.
9,307,928	B1	4/2016	Al-Ali et al.
9,311,382	B2	4/2016	Varoglu et al.
9,323,894	B2	4/2016	Kiani
D755,392	S	5/2016	Hwang et al.
9,326,712	B1	5/2016	Kiani
9,333,316	B2	5/2016	Kiani
9,339,220	B2	5/2016	Lamego et al.
9,339,236	B2	5/2016	Frix et al.
9,341,565	B2	5/2016	Lamego et al.
9,351,673	B2	5/2016	Diab et al.
9,351,675	B2	5/2016	Al-Ali et al.
9,357,665	B2	5/2016	Myers et al.
9,364,181	B2	6/2016	Kiani et al.
9,368,671	B2	6/2016	Wojtczuk et al.
9,370,325	B2	6/2016	Al-Ali et al.
9,370,326	B2	6/2016	McHale et al.
9,370,335	B2	6/2016	Al-Ali et al.
9,375,185	B2	6/2016	Ali et al.
9,386,953	B2	7/2016	Al-Ali
9,386,961	B2	7/2016	Al-Ali et al.
9,392,945	B2	7/2016	Al-Ali et al.
9,397,448	B2	7/2016	Al-Ali et al.
9,408,542	B1	8/2016	Kinast et al.
9,436,645	B2	9/2016	Al-Ali et al.
9,445,759	B1	9/2016	Lamego et al.
9,466,919	B2	10/2016	Kiani et al.
9,474,474	B2	10/2016	Lamego et al.
9,480,422	B2	11/2016	Al-Ali
9,480,435	B2	11/2016	Olsen
9,489,081	B2	11/2016	Anzures et al.
9,492,110	B2	11/2016	Al-Ali et al.
9,497,534	B2	11/2016	Prest et al.
9,510,779	B2	12/2016	Poeze et al.

(56) **References Cited**

U.S. PATENT DOCUMENTS

9,517,024	B2	12/2016	Kiani et al.
9,526,430	B2	12/2016	Srinivas et al.
9,532,722	B2	1/2017	Lamego et al.
9,538,949	B2	1/2017	Al-Ali et al.
9,538,980	B2	1/2017	Telfort et al.
9,549,696	B2	1/2017	Lamego et al.
9,553,625	B2	1/2017	Hatanaka et al.
9,554,737	B2	1/2017	Schurman et al.
9,560,996	B2	2/2017	Kiani
9,560,998	B2	2/2017	Al-Ali et al.
9,566,019	B2	2/2017	Al-Ali et al.
9,579,039	B2	2/2017	Jansen et al.
9,591,975	B2	3/2017	Dalvi et al.
9,593,969	B2	3/2017	King
9,622,692	B2	4/2017	Lamego et al.
9,622,693	B2	4/2017	Diab
D788,312	S	5/2017	Al-Ali et al.
9,636,055	B2	5/2017	Al-Ali et al.
9,636,056	B2	5/2017	Al-Ali
9,649,054	B2	5/2017	Lamego et al.
9,651,405	B1	5/2017	Gowreesunker et al.
9,662,052	B2	5/2017	Al-Ali et al.
9,668,676	B2	6/2017	Culbert
9,668,679	B2	6/2017	Schurman et al.
9,668,680	B2	6/2017	Bruinsma et al.
9,668,703	B2	6/2017	Al-Ali
9,675,286	B2	6/2017	Diab
9,681,812	B2	6/2017	Presura
9,684,900	B2	6/2017	Motoki et al.
9,687,160	B2	6/2017	Kiani
9,693,719	B2	7/2017	Al-Ali et al.
9,693,737	B2	7/2017	Al-Ali
9,697,928	B2	7/2017	Al-Ali et al.
9,699,546	B2	7/2017	Qian et al.
9,716,937	B2	7/2017	Qian et al.
9,717,425	B2	8/2017	Kiani et al.
9,717,448	B2	8/2017	Frix et al.
9,717,458	B2	8/2017	Lamego et al.
9,723,997	B1	8/2017	Lamego
9,724,016	B1	8/2017	Al-Ali et al.
9,724,024	B2	8/2017	Al-Ali
9,724,025	B1	8/2017	Kiani et al.
9,730,640	B2	8/2017	Diab et al.
9,743,887	B2	8/2017	Al-Ali et al.
9,749,232	B2	8/2017	Sampath et al.
9,750,442	B2	9/2017	Olsen
9,750,443	B2	9/2017	Smith et al.
9,750,461	B1	9/2017	Telfort
9,752,925	B2	9/2017	Chu et al.
9,775,545	B2	10/2017	Al-Ali et al.
9,775,546	B2	10/2017	Diab et al.
9,775,570	B2	10/2017	Al-Ali
9,778,079	B1	10/2017	Al-Ali et al.
9,781,984	B2	10/2017	Baranski et al.
9,782,077	B2	10/2017	Lamego et al.
9,782,110	B2	10/2017	Kiani
9,787,568	B2	10/2017	Lamego et al.
9,788,735	B2	10/2017	Al-Ali
9,788,768	B2	10/2017	Al-Ali et al.
9,795,300	B2	10/2017	Al-Ali
9,795,310	B2	10/2017	Al-Ali
9,795,358	B2	10/2017	Telfort et al.
9,795,739	B2	10/2017	Al-Ali et al.
9,801,556	B2	10/2017	Kiani
9,801,588	B2	10/2017	Weber et al.
9,808,188	B1	11/2017	Perea et al.
9,814,418	B2	11/2017	Weber et al.
9,820,691	B2	11/2017	Kiani
9,833,152	B2	12/2017	Kiani et al.
9,833,180	B2	12/2017	Shakespeare et al.
9,838,775	B2	12/2017	Qian et al.
9,839,379	B2	12/2017	Al-Ali et al.
9,839,381	B1	12/2017	Weber et al.
9,847,002	B2	12/2017	Kiani et al.
9,847,749	B2	12/2017	Kiani et al.
9,848,800	B1	12/2017	Lee et al.
9,848,806	B2	12/2017	Al-Ali et al.
9,848,807	B2	12/2017	Lamego
9,848,823	B2	12/2017	Raghuram et al.
9,861,298	B2	1/2018	Eckerbom et al.
9,861,304	B2	1/2018	Al-Ali et al.
9,861,305	B1	1/2018	Weber et al.
9,866,671	B1	1/2018	Thompson et al.
9,867,575	B2	1/2018	Maani et al.
9,867,578	B2	1/2018	Al-Ali et al.
9,872,623	B2	1/2018	Al-Ali
9,876,320	B2	1/2018	Coverston et al.
9,877,650	B2	1/2018	Muhsin et al.
9,877,686	B2	1/2018	Al-Ali et al.
9,891,079	B2	2/2018	Dalvi
9,891,590	B2	2/2018	Shim et al.
9,895,107	B2	2/2018	Al-Ali et al.
9,898,049	B2	2/2018	Myers et al.
9,913,617	B2	3/2018	Al-Ali et al.
9,918,646	B2	3/2018	Singh Alvarado et al.
9,924,893	B2	3/2018	Schurman et al.
9,924,897	B1	3/2018	Abdul-Hafiz
9,936,917	B2	4/2018	Poeze et al.
9,943,269	B2	4/2018	Muhsin et al.
9,949,676	B2	4/2018	Al-Ali
9,952,095	B1	4/2018	Hotelling et al.
9,955,937	B2	5/2018	Telfort
9,965,946	B2	5/2018	Al-Ali
9,980,667	B2	5/2018	Kiani et al.
D820,865	S	6/2018	Muhsin et al.
9,986,919	B2	6/2018	Lamego et al.
9,986,952	B2	6/2018	Dalvi et al.
9,989,560	B2	6/2018	Poeze et al.
9,993,207	B2	6/2018	Al-Ali et al.
10,007,758	B2	6/2018	Al-Ali et al.
D822,215	S	7/2018	Al-Ali et al.
D822,216	S	7/2018	Barker et al.
10,010,276	B2	7/2018	Al-Ali et al.
10,032,002	B2	7/2018	Kiani et al.
10,039,080	B2	7/2018	Miller et al.
10,039,482	B2	8/2018	Al-Ali et al.
10,039,491	B2	8/2018	Thompson et al.
10,052,037	B2	8/2018	Kinast et al.
10,055,121	B2	8/2018	Chaudhri et al.
10,058,275	B2	8/2018	Al-Ali et al.
10,064,562	B2	9/2018	Al-Ali
10,066,970	B2	9/2018	Gowreesunker et al.
10,076,257	B2	9/2018	Lin et al.
10,078,052	B2	9/2018	Ness et al.
10,086,138	B1	10/2018	Novak, Jr.
10,092,200	B2	10/2018	Al-Ali et al.
10,092,244	B2	10/2018	Chuang et al.
10,092,249	B2	10/2018	Kiani et al.
10,098,550	B2	10/2018	Al-Ali et al.
10,098,591	B2	10/2018	Al-Ali et al.
10,098,610	B2	10/2018	Al-Ali et al.
D833,624	S	11/2018	DeJong et al.
10,117,587	B2	11/2018	Han
10,123,726	B2	11/2018	Al-Ali et al.
10,130,289	B2	11/2018	Al-Ali et al.
10,130,291	B2	11/2018	Schurman et al.
D835,282	S	12/2018	Barker et al.
D835,283	S	12/2018	Barker et al.
D835,284	S	12/2018	Barker et al.
D835,285	S	12/2018	Barker et al.
10,149,616	B2	12/2018	Al-Ali et al.
10,154,815	B2	12/2018	Al-Ali et al.
10,159,412	B2	12/2018	Lamego et al.
10,165,954	B2	1/2019	Lee
10,188,296	B2	1/2019	Al-Ali et al.
10,188,331	B1	1/2019	Al-Ali et al.
10,188,348	B2	1/2019	Kiani et al.
RE47,218	E	2/2019	Al-Ali
RE47,244	E	2/2019	Kiani et al.
RE47,249	E	2/2019	Kiani et al.
10,194,847	B2	2/2019	Al-Ali
10,194,848	B1	2/2019	Kiani et al.
10,201,286	B2	2/2019	Waydo
10,201,298	B2	2/2019	Al-Ali et al.

(56) **References Cited**

U.S. PATENT DOCUMENTS

10,205,272	B2	2/2019	Kiani et al.
10,205,291	B2	2/2019	Scruggs et al.
10,213,108	B2	2/2019	Al-Ali
10,215,698	B2	2/2019	Han et al.
10,219,706	B2	3/2019	Al-Ali
10,219,746	B2	3/2019	McHale et al.
10,219,754	B1	3/2019	Lamego
10,226,187	B2	3/2019	Al-Ali et al.
10,226,576	B2	3/2019	Kiani
10,231,657	B2	3/2019	Al-Ali et al.
10,231,670	B2	3/2019	Blank et al.
10,231,676	B2	3/2019	Al-Ali et al.
RE47,353	E	4/2019	Kiani et al.
10,247,670	B2	4/2019	Ness et al.
10,251,585	B2	4/2019	Al-Ali et al.
10,251,586	B2	4/2019	Lamego
10,255,994	B2	4/2019	Sampath et al.
10,258,265	B1	4/2019	Poeze et al.
10,258,266	B1	4/2019	Poeze et al.
10,265,024	B2	4/2019	Lee et al.
10,271,748	B2	4/2019	Al-Ali
10,278,626	B2	5/2019	Schurman et al.
10,278,648	B2	5/2019	Al-Ali et al.
10,279,247	B2	5/2019	Kiani
10,285,626	B1	5/2019	Kestelli et al.
10,292,628	B1	5/2019	Poeze et al.
10,292,657	B2	5/2019	Abdul-Hafiz et al.
10,292,664	B2	5/2019	Al-Ali
10,299,708	B1	5/2019	Poeze et al.
10,299,709	B2	5/2019	Perea et al.
10,305,775	B2	5/2019	Lamego et al.
10,307,111	B2	6/2019	Muhsin et al.
10,325,681	B2	6/2019	Sampath et al.
10,327,337	B2	6/2019	Triman et al.
10,390,716	B2	8/2019	Shimuta
10,398,383	B2	9/2019	van Dinther et al.
10,406,445	B2	9/2019	Vock et al.
10,416,079	B2	9/2019	Magnussen et al.
2002/0042558	A1	4/2002	Mendelson
2003/0036690	A1	2/2003	Geddes et al.
2004/0054290	A1	3/2004	Chance
2004/0114783	A1	6/2004	Spycher et al.
2005/0277819	A1	12/2005	Kiani et al.
2006/0009607	A1	1/2006	Lutz et al.
2006/0161054	A1	7/2006	Reuss et al.
2006/0182659	A1	8/2006	Unlu et al.
2007/0282478	A1	12/2007	Al-Ali et al.
2008/0030468	A1	2/2008	Al-Ali et al.
2009/0177097	A1	7/2009	Ma et al.
2009/0247984	A1	10/2009	Lamego et al.
2009/0275813	A1	11/2009	Davis
2009/0275844	A1	11/2009	Al-Ali
2010/0004518	A1	1/2010	Vo et al.
2010/0030040	A1	2/2010	Poeze et al.
2010/0030043	A1	2/2010	Kuhn
2010/0113948	A1	5/2010	Yang et al.
2011/0004106	A1	1/2011	Iwamiya et al.
2011/0082711	A1	4/2011	Poeze et al.
2011/0085721	A1	4/2011	Guyon et al.
2011/0105854	A1	5/2011	Kiani et al.
2011/0125060	A1	5/2011	Telfort et al.
2011/0208015	A1	8/2011	Welch et al.
2011/0213212	A1	9/2011	Al-Ali
2011/0230733	A1	9/2011	Al-Ali
2011/0237969	A1	9/2011	Eckerbom et al.
2011/0245697	A1	10/2011	Miettinen
2011/0288383	A1	11/2011	Diab
2011/0301444	A1	12/2011	Al-Ali
2012/0041316	A1	2/2012	Al-Ali et al.
2012/0046557	A1	2/2012	Kiani
2012/0059267	A1	3/2012	Lamego et al.
2012/0088984	A1	4/2012	Al-Ali et al.
2012/0150052	A1	6/2012	Buchheim et al.
2012/0165629	A1	6/2012	Merritt et al.
2012/0179006	A1	7/2012	Jansen et al.
2012/0197093	A1	8/2012	LeBoeuf et al.
2012/0197137	A1	8/2012	Jeanne et al.
2012/0209082	A1	8/2012	Al-Ali
2012/0209084	A1	8/2012	Olsen et al.
2012/0283524	A1	11/2012	Kiani et al.
2012/0296178	A1	11/2012	Lamego et al.
2012/0319816	A1	12/2012	Al-Ali
2012/0330112	A1	12/2012	Lamego et al.
2013/0006076	A1	1/2013	McHale
2013/0018233	A1	1/2013	Cinbis et al.
2013/0023775	A1	1/2013	Lamego et al.
2013/0041591	A1	2/2013	Lamego
2013/0046204	A1	2/2013	Lamego et al.
2013/0060147	A1	3/2013	Welch et al.
2013/0085346	A1	4/2013	Lin et al.
2013/0096405	A1	4/2013	Garfio
2013/0096936	A1	4/2013	Sampath et al.
2013/0131474	A1	5/2013	Gu et al.
2013/0190581	A1	7/2013	Al-Ali et al.
2013/0204112	A1	8/2013	White et al.
2013/0211214	A1	8/2013	Olsen
2013/0243021	A1	9/2013	Siskavich
2013/0253334	A1	9/2013	Al-Ali et al.
2013/0262730	A1	10/2013	Al-Ali et al.
2013/0267804	A1	10/2013	Al-Ali
2013/0274572	A1	10/2013	Al-Ali et al.
2013/0296672	A1	11/2013	O'Neil et al.
2013/0296713	A1	11/2013	Al-Ali et al.
2013/0317370	A1	11/2013	Dalvi et al.
2013/0324808	A1	12/2013	Al-Ali et al.
2013/0331660	A1	12/2013	Al-Ali et al.
2013/0331670	A1	12/2013	Kiani
2014/0012100	A1	1/2014	Al-Ali et al.
2014/0034353	A1	2/2014	Al-Ali et al.
2014/0051953	A1	2/2014	Lamego et al.
2014/0051955	A1	2/2014	Tiao et al.
2014/0066783	A1	3/2014	Kiani et al.
2014/0073887	A1	3/2014	Petersen et al.
2014/0073960	A1	3/2014	Rodriguez-Llorente et al.
2014/0077956	A1	3/2014	Sampath et al.
2014/0081100	A1	3/2014	Muhsin et al.
2014/0081175	A1	3/2014	Telfort
2014/0094667	A1	4/2014	Schurman et al.
2014/0100434	A1	4/2014	Diab et al.
2014/0107493	A1	4/2014	Yuen et al.
2014/0114199	A1	4/2014	Lamego et al.
2014/0120564	A1	5/2014	Workman et al.
2014/0121482	A1	5/2014	Merritt et al.
2014/0121483	A1	5/2014	Kiani
2014/0127137	A1	5/2014	Bellott et al.
2014/0129702	A1	5/2014	Lamego et al.
2014/0135588	A1	5/2014	Al-Ali et al.
2014/0142401	A1	5/2014	Al-Ali et al.
2014/0163344	A1	6/2014	Al-Ali
2014/0163402	A1	6/2014	Lamego et al.
2014/0166076	A1	6/2014	Kiani et al.
2014/0171146	A1	6/2014	Ma et al.
2014/0171763	A1	6/2014	Diab
2014/0180038	A1	6/2014	Kiani
2014/0180154	A1	6/2014	Sierra et al.
2014/0180160	A1	6/2014	Brown et al.
2014/0187973	A1	7/2014	Brown et al.
2014/0192177	A1	7/2014	Bartula et al.
2014/0194766	A1	7/2014	Al-Ali et al.
2014/0206954	A1	7/2014	Yuen et al.
2014/0206963	A1	7/2014	Al-Ali
2014/0213864	A1	7/2014	Abdul-Hafiz et al.
2014/0221854	A1	8/2014	Wai
2014/0266790	A1	9/2014	Al-Ali et al.
2014/0275808	A1	9/2014	Poeze et al.
2014/0275835	A1	9/2014	Lamego et al.
2014/0275871	A1	9/2014	Lamego et al.
2014/0275872	A1	9/2014	Merritt et al.
2014/0275881	A1	9/2014	Lamego et al.
2014/0276013	A1	9/2014	Muehlemann et al.
2014/0276115	A1	9/2014	Dalvi et al.
2014/0276116	A1	9/2014	Takahashi et al.
2014/0288400	A1	9/2014	Diab et al.
2014/0303520	A1	10/2014	Telfort et al.

(56) **References Cited**

U.S. PATENT DOCUMENTS

2014/0316217 A1 10/2014 Purdon et al.
2014/0316218 A1 10/2014 Purdon et al.
2014/0316228 A1 10/2014 Blank et al.
2014/0323825 A1 10/2014 Al-Ali et al.
2014/0323897 A1 10/2014 Brown et al.
2014/0323898 A1 10/2014 Purdon et al.
2014/0330092 A1 11/2014 Al-Ali et al.
2014/0330098 A1 11/2014 Merritt et al.
2014/0330099 A1 11/2014 Al-Ali et al.
2014/0336481 A1 11/2014 Shakespeare et al.
2014/0357966 A1 12/2014 Al-Ali et al.
2014/0361147 A1 12/2014 Fei
2014/0371548 A1 12/2014 Al-Ali et al.
2014/0371632 A1 12/2014 Al-Ali et al.
2014/0378784 A1 12/2014 Kiani et al.
2014/0378844 A1 12/2014 Fei
2015/0005600 A1 1/2015 Blank et al.
2015/0011907 A1 1/2015 Purdon et al.
2015/0012231 A1 1/2015 Poeze et al.
2015/0018650 A1 1/2015 Al-Ali et al.
2015/0025406 A1 1/2015 Al-Ali
2015/0032029 A1 1/2015 Al-Ali et al.
2015/0038859 A1 2/2015 Dalvi et al.
2015/0045637 A1 2/2015 Dalvi
2015/0045685 A1 2/2015 Al-Ali et al.
2015/0051462 A1 2/2015 Olsen
2015/0065889 A1 3/2015 Gandelman et al.
2015/0080754 A1 3/2015 Purdon et al.
2015/0087936 A1 3/2015 Al-Ali et al.
2015/0094546 A1 4/2015 Al-Ali
2015/0097701 A1 4/2015 Al-Ali et al.
2015/0099324 A1 4/2015 Wojtczuk et al.
2015/0099950 A1 4/2015 Al-Ali et al.
2015/0099951 A1 4/2015 Al-Ali et al.
2015/0099955 A1 4/2015 Al-Ali et al.
2015/0101844 A1 4/2015 Al-Ali et al.
2015/0106121 A1 4/2015 Muhsin et al.
2015/0112151 A1 4/2015 Muhsin et al.
2015/0116076 A1 4/2015 Al-Ali et al.
2015/0119725 A1 4/2015 Martin et al.
2015/0126830 A1 5/2015 Schurman et al.
2015/0133755 A1 5/2015 Smith et al.
2015/0140863 A1 5/2015 Al-Ali et al.
2015/0141781 A1 5/2015 Weber et al.
2015/0165312 A1 6/2015 Kiani
2015/0173671 A1 6/2015 Paalasmaa et al.
2015/0196237 A1 7/2015 Lamego
2015/0201874 A1 7/2015 Diab
2015/0208966 A1 7/2015 Al-Ali
2015/0216459 A1 8/2015 Al-Ali et al.
2015/0230755 A1 8/2015 Al-Ali et al.
2015/0238722 A1 8/2015 Al-Ali
2015/0245773 A1 9/2015 Lamego et al.
2015/0245793 A1 9/2015 Al-Ali et al.
2015/0245794 A1 9/2015 Al-Ali
2015/0255001 A1 9/2015 Haughav et al.
2015/0257689 A1 9/2015 Al-Ali et al.
2015/0272514 A1 10/2015 Kiani et al.
2015/0281424 A1 10/2015 Vock et al.
2015/0318100 A1 11/2015 Rothkopf et al.
2015/0351697 A1 12/2015 Weber et al.
2015/0351704 A1 12/2015 Kiani et al.
2015/0359429 A1 12/2015 Al-Ali et al.
2015/0366472 A1 12/2015 Kiani
2015/0366507 A1 12/2015 Blank
2015/0374298 A1 12/2015 Al-Ali et al.
2015/0380875 A1 12/2015 Coverston et al.
2016/0000362 A1 1/2016 Diab et al.
2016/0007930 A1 1/2016 Weber et al.
2016/0019360 A1 1/2016 Pahwa et al.
2016/0022160 A1 1/2016 Pi et al.
2016/0023245 A1 1/2016 Zadesky et al.
2016/0029932 A1 2/2016 Al-Ali
2016/0029933 A1 2/2016 Al-Ali et al.
2016/0038045 A1 2/2016 Shapiro
2016/0041531 A1 2/2016 Mackie et al.
2016/0045118 A1 2/2016 Kiani
2016/0051157 A1 2/2016 Waydo
2016/0051158 A1 2/2016 Silva
2016/0051205 A1 2/2016 Al-Ali et al.
2016/0058302 A1 3/2016 Raghuram et al.
2016/0058309 A1 3/2016 Han
2016/0058310 A1 3/2016 Lijima
2016/0058312 A1 3/2016 Han et al.
2016/0058338 A1 3/2016 Schurman et al.
2016/0058347 A1 3/2016 Reichgott et al.
2016/0058356 A1 3/2016 Raghuram et al.
2016/0058370 A1 3/2016 Raghuram et al.
2016/0066823 A1 3/2016 Kind et al.
2016/0066824 A1 3/2016 Al-Ali et al.
2016/0066879 A1 3/2016 Telfort et al.
2016/0071392 A1 3/2016 Hankey et al.
2016/0072429 A1 3/2016 Kiani et al.
2016/0073967 A1 3/2016 Lamego et al.
2016/0081552 A1 3/2016 Wojtczuk et al.
2016/0095543 A1 4/2016 Telfort et al.
2016/0095548 A1 4/2016 Al-Ali et al.
2016/0103598 A1 4/2016 Al-Ali et al.
2016/0106367 A1 4/2016 Jorov et al.
2016/0113527 A1 4/2016 Al-Ali et al.
2016/0143548 A1 5/2016 Al-Ali
2016/0154950 A1 6/2016 Nakajima et al.
2016/0157780 A1 6/2016 Rimminen et al.
2016/0166182 A1 6/2016 Al-Ali et al.
2016/0166183 A1 6/2016 Poeze et al.
2016/0196388 A1 7/2016 Lamego
2016/0197436 A1 7/2016 Barker et al.
2016/0213281 A1 7/2016 Eckerbom et al.
2016/0213309 A1 7/2016 Sannholm et al.
2016/0228043 A1 8/2016 O'Neil et al.
2016/0233632 A1 8/2016 Scruggs et al.
2016/0234944 A1 8/2016 Schmidt et al.
2016/0256058 A1 9/2016 Pham et al.
2016/0256082 A1 9/2016 Ely et al.
2016/0267238 A1 9/2016 Nag
2016/0270735 A1 9/2016 Diab et al.
2016/0283665 A1 9/2016 Sampath et al.
2016/0287090 A1 10/2016 Al-Ali et al.
2016/0287107 A1 10/2016 Szabados et al.
2016/0287181 A1 10/2016 Han et al.
2016/0287786 A1 10/2016 Kiani
2016/0296169 A1 10/2016 McHale et al.
2016/0296173 A1 10/2016 Culbert
2016/0296174 A1 10/2016 Isikman et al.
2016/0310027 A1 10/2016 Han
2016/0310052 A1 10/2016 Al-Ali et al.
2016/0314260 A1 10/2016 Kiani
2016/0324488 A1 11/2016 Olsen
2016/0327984 A1 11/2016 Al-Ali et al.
2016/0331332 A1 11/2016 Al-Ali
2016/0367173 A1 12/2016 Dalvi et al.
2016/0378069 A1 12/2016 Rothkopf
2016/0378071 A1 12/2016 Rothkopf
2017/0000394 A1 1/2017 Al-Ali et al.
2017/0007134 A1 1/2017 Al-Ali et al.
2017/0007183 A1 1/2017 Dusan et al.
2017/0007198 A1 1/2017 Al-Ali et al.
2017/0010858 A1 1/2017 Prest et al.
2017/0014083 A1 1/2017 Diab et al.
2017/0014084 A1 1/2017 Al-Ali et al.
2017/0024748 A1 1/2017 Haider
2017/0042488 A1 2/2017 Muhsin
2017/0055851 A1 3/2017 Al-Ali
2017/0055882 A1 3/2017 Al-Ali et al.
2017/0055887 A1 3/2017 Al-Ali
2017/0055896 A1 3/2017 Al-Ali et al.
2017/0074897 A1 3/2017 Mermel et al.
2017/0079594 A1 3/2017 Telfort et al.
2017/0084133 A1 3/2017 Cardinali et al.
2017/0086689 A1 3/2017 Shui et al.
2017/0086723 A1 3/2017 Al-Ali et al.
2017/0086742 A1 3/2017 Harrison-Noonan et al.
2017/0086743 A1 3/2017 Bushnell et al.
2017/0094450 A1 3/2017 Tu et al.

(56) **References Cited**

U.S. PATENT DOCUMENTS

2017/0143281 A1 5/2017 Olsen
2017/0147774 A1 5/2017 Kiani
2017/0156620 A1 6/2017 Al-Ali et al.
2017/0164884 A1 6/2017 Culbert et al.
2017/0172435 A1 6/2017 Presura
2017/0172476 A1 6/2017 Schilthuizen
2017/0173632 A1 6/2017 Al-Ali
2017/0187146 A1 6/2017 Kiani et al.
2017/0188919 A1 7/2017 Al-Ali et al.
2017/0196464 A1 7/2017 Jansen et al.
2017/0196470 A1 7/2017 Lamego et al.
2017/0202505 A1 7/2017 Kirenko et al.
2017/0209095 A1 7/2017 Wagner et al.
2017/0224262 A1 8/2017 Al-Ali
2017/0228516 A1 8/2017 Sampath et al.
2017/0245790 A1 8/2017 Al-Ali et al.
2017/0248446 A1 8/2017 Gowreesunker et al.
2017/0251974 A1 9/2017 Shreim et al.
2017/0251975 A1 9/2017 Shreim et al.
2017/0258403 A1 9/2017 Abdul-Hafiz et al.
2017/0273619 A1 9/2017 Alvarado et al.
2017/0281024 A1 10/2017 Narasimhan et al.
2017/0293727 A1 10/2017 Klaassen et al.
2017/0311851 A1 11/2017 Schurman et al.
2017/0311891 A1 11/2017 Kiani et al.
2017/0325698 A1 11/2017 Allec et al.
2017/0325728 A1 11/2017 Al-Ali et al.
2017/0325744 A1 11/2017 Allec et al.
2017/0332976 A1 11/2017 Al-Ali et al.
2017/0340209 A1 11/2017 Klaassen et al.
2017/0340219 A1 11/2017 Sullivan et al.
2017/0340293 A1 11/2017 Al-Ali et al.
2017/0347885 A1 12/2017 Tan et al.
2017/0354332 A1 12/2017 Lamego
2017/0354795 A1 12/2017 Blahnik et al.
2017/0358239 A1 12/2017 Arney et al.
2017/0358240 A1 12/2017 Blahnik et al.
2017/0358242 A1 12/2017 Thompson et al.
2017/0360306 A1 12/2017 Narasimhan et al.
2017/0360310 A1 12/2017 Kiani et al.
2017/0366657 A1 12/2017 Thompson et al.
2017/0367632 A1 12/2017 Al-Ali et al.
2018/0008146 A1 1/2018 Al-Ali et al.
2018/0013562 A1 1/2018 Haider et al.
2018/0014752 A1 1/2018 Al-Ali et al.
2018/0014781 A1 1/2018 Clavelle et al.
2018/0025287 A1 1/2018 Mathew et al.
2018/0028124 A1 2/2018 Al-Ali et al.
2018/0042556 A1 2/2018 Shahparnia et al.
2018/0049694 A1 2/2018 Singh Alvarado et al.
2018/0050235 A1 2/2018 Tan et al.
2018/0055375 A1 3/2018 Martinez et al.
2018/0055385 A1 3/2018 Al-Ali
2018/0055390 A1 3/2018 Kiani et al.
2018/0055430 A1 3/2018 Diab et al.
2018/0055439 A1 3/2018 Pham et al.
2018/0056129 A1 3/2018 Narasimha Rao et al.
2018/0064381 A1 3/2018 Shakespeare et al.
2018/0069776 A1 3/2018 Lamego et al.
2018/0070867 A1 3/2018 Smith et al.
2018/0078151 A1 3/2018 Allec et al.
2018/0078182 A1 3/2018 Chen et al.
2018/0082767 A1 3/2018 Al-Ali et al.
2018/0085068 A1 3/2018 Telfort
2018/0087937 A1 3/2018 Al-Ali et al.
2018/0103874 A1 4/2018 Lee et al.
2018/0103905 A1 4/2018 Kiani
2018/0110469 A1 4/2018 Maani et al.
2018/0110478 A1 4/2018 Al-Ali
2018/0116575 A1 5/2018 Perea et al.
2018/0125368 A1 5/2018 Lamego et al.
2018/0125430 A1 5/2018 Al-Ali et al.
2018/0125445 A1 5/2018 Telfort et al.
2018/0130325 A1 5/2018 Kiani et al.
2018/0132769 A1 5/2018 Weber et al.
2018/0132770 A1 5/2018 Lamego
2018/0146901 A1 5/2018 Al-Ali et al.
2018/0146902 A1 5/2018 Kiani et al.
2018/0153418 A1 6/2018 Sullivan et al.
2018/0153442 A1 6/2018 Eckerbom et al.
2018/0153446 A1 6/2018 Kiani
2018/0153447 A1 6/2018 Al-Ali et al.
2018/0153448 A1 6/2018 Weber et al.
2018/0161499 A1 6/2018 Al-Ali et al.
2018/0164853 A1 6/2018 Myers et al.
2018/0168491 A1 6/2018 Al-Ali et al.
2018/0174679 A1 6/2018 Sampath et al.
2018/0174680 A1 6/2018 Sampath et al.
2018/0182484 A1 6/2018 Sampath et al.
2018/0184917 A1 7/2018 Kiani
2018/0192924 A1 7/2018 Al-Ali
2018/0192953 A1 7/2018 Shreim et al.
2018/0192955 A1 7/2018 Al-Ali et al.
2018/0196514 A1 7/2018 Allec et al.
2018/0199871 A1 7/2018 Pauley et al.
2018/0206795 A1 7/2018 Al-Ali
2018/0206815 A1 7/2018 Telfort
2018/0213583 A1 7/2018 Al-Ali
2018/0214031 A1 8/2018 Kiani et al.
2018/0214090 A1 8/2018 Al-Ali et al.
2018/0218792 A1 8/2018 Muhsin et al.
2018/0225960 A1 8/2018 Al-Ali et al.
2018/0228414 A1 8/2018 Shao et al.
2018/0238718 A1 8/2018 Dalvi
2018/0238734 A1 8/2018 Hotelling et al.
2018/0242853 A1 8/2018 Al-Ali
2018/0242921 A1 8/2018 Muhsin et al.
2018/0242923 A1 8/2018 Al-Ali et al.
2018/0242924 A1 8/2018 Barker et al.
2018/0242926 A1 8/2018 Muhsin et al.
2018/0247353 A1 8/2018 Al-Ali et al.
2018/0247712 A1 8/2018 Muhsin et al.
2018/0249933 A1 9/2018 Schurman et al.
2018/0253947 A1 9/2018 Muhsin et al.
2018/0256087 A1 9/2018 Al-Ali et al.
2018/0256113 A1 9/2018 Weber et al.
2018/0279956 A1 10/2018 Waydo et al.
2018/0285094 A1 10/2018 Housel et al.
2018/0289325 A1 10/2018 Poeze et al.
2018/0289337 A1 10/2018 Al-Ali et al.
2018/0296161 A1 10/2018 Shreim et al.
2018/0300919 A1 10/2018 Muhsin et al.
2018/0310822 A1 11/2018 Indorf et al.
2018/0310823 A1 11/2018 Al-Ali et al.
2018/0317826 A1 11/2018 Muhsin
2018/0317841 A1 11/2018 Novak, Jr.
2018/0333055 A1 11/2018 Lamego et al.
2018/0333087 A1 11/2018 Al-Ali
2019/0000317 A1 1/2019 Muhsin et al.
2019/0000362 A1 1/2019 Kiani et al.
2019/0015023 A1 1/2019 Monfre
2019/0021638 A1 1/2019 Al-Ali et al.
2019/0029574 A1 1/2019 Schurman et al.
2019/0029578 A1 1/2019 Al-Ali et al.
2019/0038143 A1 2/2019 Al-Ali
2019/0058280 A1 2/2019 Al-Ali et al.
2019/0058281 A1 2/2019 Al-Ali et al.
2019/0069813 A1 3/2019 Al-Ali
2019/0069814 A1 3/2019 Al-Ali
2019/0076028 A1 3/2019 Al-Ali et al.
2019/0082979 A1 3/2019 Al-Ali et al.
2019/0090748 A1 3/2019 Al-Ali
2019/0090760 A1 3/2019 Kinast et al.
2019/0090764 A1 3/2019 Al-Ali
2019/0104973 A1 4/2019 Poeze et al.
2019/0110719 A1 4/2019 Poeze et al.
2019/0117070 A1 4/2019 Muhsin et al.
2019/0117139 A1 4/2019 Al-Ali et al.
2019/0117140 A1 4/2019 Al-Ali et al.
2019/0117141 A1 4/2019 Al-Ali
2019/0117930 A1 4/2019 Al-Ali
2019/0122763 A1 4/2019 Sampath et al.
2019/0133525 A1 5/2019 Al-Ali et al.
2019/0142283 A1 5/2019 Lamego et al.

(56) **References Cited**

U.S. PATENT DOCUMENTS

2019/0142344	A1	5/2019	Telfort et al.
2019/0150800	A1	5/2019	Poeze et al.
2019/0150856	A1	5/2019	Kiani et al.
2019/0167161	A1	6/2019	Al-Ali et al.
2019/0175019	A1	6/2019	Al-Ali et al.
2019/0192076	A1	6/2019	McHale et al.

FOREIGN PATENT DOCUMENTS

CN	103906468	A	7/2014
EP	0630208	A1	12/1994
EP	0770349	A1	5/1997
EP	0781527	A1	7/1997
EP	0880936	A2	12/1998
EP	0985373	A1	3/2000
EP	1124609	B1	8/2001
EP	2277440	A1	1/2011
GB	2243691	A	11/1991
JP	H09257508	A	10/1997
JP	H10314133	A	12/1998
JP	H1170086	A	3/1999
JP	2919326	B2	7/1999
KR	2010/0091592	A	8/2010
KR	20100091592	A	8/2010
WO	WO 1994/23643	A1	10/1994
WO	WO 1995/000070	A1	1/1995
WO	WO 1995000070	A1	1/1995
WO	WO 1996/027325	A1	9/1996
WO	WO 1997/00923	A1	1/1997
WO	WO 1997009923	A1	3/1997
WO	WO 1996/063883	A1	12/1999
WO	WO 1999063883	A1	12/1999
WO	WO 2000/028892	A1	5/2000
WO	WO 2000028892	A1	5/2000
WO	WO 02/028274	A1	4/2002
WO	WO 2006/113070	A1	10/2006
WO	WO 2008/107238	A1	9/2008
WO	WO 2009/001988	A1	12/2008
WO	WO 2009/137524	A1	11/2009
WO	WO 2011/069122	A1	6/2011
WO	WO 2013/030744	A1	3/2013
WO	WO 2013030744	A1	3/2013
WO	WO 2013/106607	A1	7/2013
WO	WO 2013/181368	A1	12/2013
WO	WO 2014/18447	A1	1/2014
WO	WO 2014/115075	A1	7/2014
WO	WO 2014/153200	A1	9/2014
WO	WO 2014/178793	A1	11/2014
WO	WO 2014184447	A1	11/2014
WO	WO 2015/187732	A1	12/2015
WO	WO 2016/066312	A1	5/2016

OTHER PUBLICATIONS

"Heart Rate Measurement Technology" EPSON, 2019.
"Introducing Easy Pulse: A DIY Photoplethysmographic Sensor for Measuring Heart Rate", Embedded Lab, 2012.
"PerformTek Precision Biometrics", ValenCell, 2013.
"Galaxy S5 Explained: the Heart Rate Sensor and S Health 3.0." Samsung Global Newsroom, 2014.
"Withings Pulse: Activity Tracker—Sleep Analyzer Hear Rate Analyzer; Installation and Operating Instructions", Withings, 2015.
Jan. 9, 2020 Complaint for (1) Patent Infringement (2) Trade Secret Misappropriation and (3) Ownership of Patents and Demand for Jury Trial, *Masimo Corporation and Cercacor Laboratories, Inc.* v. *Apple Inc.*, Case No. 8:20-cv-00048, 64 pages.
Anliker et al., "AMON: a wearable multiparameter medical monitoring and alert system," in *IEEE Transactions on Information Technology in Biomedicine*, vol. 8, No. 4, Dec. 2004.
Asada, et al. "Mobile Monitoring with Wearable Photoplethysmographic Biosensors", IEEE Engineering in Medicine and Biology Magazine, 2003.
Bagha, et al. "A Real Time Analysis of PPG Signal for Measurement of SpO2 and Pulse Rate", International Journal of Computer Applications (0975-8887), vol. 36—No. 11, 2011.
Branche, et al. "Measurement Reproducibility and Sensor Placement Considerations in Designing a Wearable Pulse Oximeter for Military Applications", IEEE, 2004.
Branche, et al. "Signal Quality and Power Consumption of a New Prototype Reflectance Pulse Oximeter Sensor", IEEE, 2005.
Celka, et al. "Motion resistant earphone located infrared based heart rate measurement device", Research Gate, 2004.
Comtois, et al. "A Comparative Evaluation of Adaptive Noise Cancellation Algorithms for Minimizing Motion Artifacts in a Forehead-Mounted Wearable Pulse Oximeter", IEEE, 2007.
Comtois, et al. "A Noise Reference Input to an Adaptive Filter Algorithm for Signal Processing in a Wearable Pulse Oximeter", IEEE, 2007.
Conway, et al. "Wearable computer as a multi-parametric monitor for physiological signals," Proceedings IEEE International Symposium on Bio-Informatics and Biomedical Engineering, pp. 236-242, 2000.
Crilly, et al. "An Integrated Pulse Oximeter System for Telemedicine Applications", IEEE Instrumentation and Measurement Technology Conference, 1997.
Dassel, et al. "Reflective Pulse Oximetry at the Forehead Improves by Pressure on the Probe", J. Clin. Monit, 11:237-244, 1995.
Dresher, et al. "A New Reflectance Pulse Oximeter Housing to Reduce Contact Pressure Effects", IEEE, 2006.
Dresher, et al. "Reflectance Forehead Pulse Oximetry: Effects of Contact Pressure During Walking", IEEE, 2006.
Faulkner, "Apple Watch Heart Rate Sensor: Everything You Need to Know." TechRadar India, TechRadar, 2015.
Gibbs, et al. "Active motion artifact cancellation for wearable health monitoring sensors using collocated MEMS accelerometers", SPIE, vol. 5765, 2005.
Hayes, "How the Sensors inside Fitness Tracker Work." Digital Trends, 2014.
Heerlein, et al. "LED-Based Sensor for Wearable Fitness Tracking Products", EDN, 2014.
Johnston, et al. "Extracting Breathing Rate Information from a Wearable Reflectance Pulse Oximeter Sensor", IEEE, 2004.
Johnston, et al. "Extracting Heart Rate Variability From a Wearable Reflectance Pulse Oximeter", IEEE, 2005.
Keikhosravi, et al. "Effect of deep breath on the correlation between the wrist and finger photoplethysmograms", pp. 135-138, 2012.
Kilbane, et al. "Design Considerations for Wrist-Wearable Heart Rate Monitors," Arrow Intelligent Systems, 2015.
Konig, V. et al., "Reflectance Pulse Oximetry—Principles and Obstetric Application in the Zurich System," J Clin Monit 1998; 14: 403-412.
Konstantas, et al. "Mobile Patient Monitoring: The MobiHealth System", Research Gate, 2004.
Kuboyama, "Motion Artifact Cancellation for Wearable Photoplethysmographic Sensor", Massachusetts Institute of Technology, pp. 1-66, 2010.
Kviesis-Kipge, et al., "Miniature Wireless Photoplethysmography Devices: Integration in Garments and Test Measurements", SPIE vol. 8427 84273H-6, 2012.
Lee, et al. "Development of a Wristwatch-Type PPG Array Sensor Module", IEEE, 2011.
Lin, et al. "RTWPMS: A Real-Time Wireless Physiological Monitoring System", IEEE Transactions on Information Technology in Biomedicine, vol. 10, No. 4, 2006.
Lingaiah, et al. "Measurement of Pulse rate and SPo2 using Pulse Oximeter developed using LabVIEW", IOSR Journal of Electrical and Electronics Engineering (IOSR-JEEE), e-Issn: 2278-1676,p-ISSN: 2320-3331, vol. 8, Issue 1, pp. 22-26, 2013.
Lukowicz, et al. "AMON: A wearable medical computer for high risk patients," *Proceedings. Sixth International Symposium on Wearable Computers*, 2002.
Lukowicz, et al. "The Weararm Modular, Low-Power Computing Core", IEEE Micro, 2001.
Mapar "Wearable Sensor for Continuously Cigilant Blood Perfusion and Oxygenation", UCLA, 2012.

(56) **References Cited**

OTHER PUBLICATIONS

Mendelson et al. "Noninvasive Pulse Oximetry Utilizing Skin Reflectance Photoplethysmography", IEEE Biomedical Engineering, vol. 35 No. 10, 1988.
Mendelson et al., "A Mobile PDA-Based Wireless Pulse Oximeter," Proceedings of the IASTED International Conference Telehealth, Jul. 19-21, 2005, pp. 1-6.
Mendelson et al., "A Wearable Reflectance Pulse Oximeter for Remote Physiological Monitoring," Proceedings of the 28th IEEE EMBS Annual International Conference, Aug. 30-Sep. 3, 2006, pp. 912-915.
Mendelson et al., "Accelerometery-Based Adaptive Noise Cancellation for Remote Physiological Monitoring by a Wearable Pulse Oximeter," Proceedings of the 3rd IASTED International Conference TELEHEALTH, May 31-Jun. 1, 2007, pp. 28-33.
Mendelson et al., "Measurement Site and Photodetector Size Considerations in Optimizing Power Consumption of a Wearable Reflectance Pulse Oximeter," Proceedings of the 25th Annual International Conference of the IEEE EMBS, Sep. 17-21, 2003, pp. 3016-3019.
Mendelson et al., "Minimization of LED Power Consumption in the Design of a Wearable Pulse Oximeter,"Proceedings of the IASTED International Conference Biomedical Engineering, Jun. 25-27, 2003, 6 pages.
Oliver et al., "HealthGear: A Real-time Wearable System for Monitoring and Analyzing Physiological Signals," Proceedings of the International Workshop on Wearable and Implantable Body Sensor Networks, IEEE Computer Society, 2006, pp. 1-4.
Pandian et al., "Smart Vest: Wearable Multi-Parameter Remote Physiological Monitoring System," Medical Engineering & Physics 30, 2008. pp. 466-477.
Phattraprayoon, et al. "Accuracy of Pulse Oximeter Readings From Probe Placementon Newborn Wrist and Ankle", Journal of Perinatology, vol. 32, pp. 276-280, 2012.
Poh et al. "Motion-Tolerant Magnetic Earring Sensor and Wireless Earpiece for Wearable Photoplethysmography", IEEE Transactions on Information Technology in Biomedicine, vol. 14, No. 3, 2010.
Pujary, "Investigation of Photodetector Optimization in Reducing Power Consumption by a Noninvasive Pulse Oximeter Sensor", Worcester Polytechnic Institute, pp. 1-133, 2004.
Purjary et al., "Photodetector Size Considerations in the Design of a Noninvasive Reflectance Pulse Oximeter for Telemedicine Applications", IEEE, 2003.
Renevey et al., "Wrist-Located Pulse Detection Using IR Signals, Activity and Nonlinear Artifact Cancellation," Proceedings of the 23rd Annual EMBS International Conference, Oct. 25-28, 2001, pp. 3030-3033.
Rhee et al. "Artifact-Resistant Power-Efficient Design of Finger-Ring Plethysmographic Sensors," IEEE Transactions on Biomedical Engineering, vol. 48, No. 7, Jul. 2001, pp. 795-805.
Rhee et al. "Artifact-Resistant, Power Efficient Design of Finger-Ring Plethysmographic Sensors, Part I: Design and Analysis," 22nd Annual International Conference IEEE Engineering in Medicine and Biology Society, Jul. 23-28, 2000, pp. 2792-2795.
Rhee et al., "Design of a Artifact-Free Wearable Plethysmographic Sensor," 21st Annual International Conferemce IEEE Engineering in Medicine and Biology Society, Oct. 13-16, 1999, p. 786.
Rhee et al., "The Ring Sensor: a New Ambulatory Wearable Sensor for Twenty-Four Hour Patient Monitoring," Proceedings of the 20th Annual International Conference of the IEEE Engineering in Medicine and Biology Society, Oct. 29-Nov. 1 1998, 4 pages.
Savage et al., "Optimizing Power Consumption in the Design of a Wearable Wireless Telesensor: Comparison of Pulse Oximeter Modes," Proceedings of IEEE 29th Annual Nonheust Bioengineering Conference, 2003, pp. 150-151.
Scully, et al. "Physiological Parameter Monitoring from Optical Recordings with a Mobile Phone", IEEE Trans Biomed Eng. ; 59(2): 303-306, 2012.
Shaltis et al., "Novel Design for a Wearable, Rapidly Depolyable, Wireless Noninvasive Triage Sensor," Proceedings of the 2005 IEEE, Engineering in Medicine and Biology 27th Annual Conference, Sep. 1-4, 2005, pp. 3567-3570.
Shin et al., "A Novel Headset with a Transmissive PPG Sensor for Heart Rate Measurement", ICBME 2008, Proceedings 23, pp. 519-522, 2009.
Shyamkumar, et al. "Wearable Wireless Cardiovascular Monitoring Using Textile-Based Nanosensor and Nanomaterial Systems", Electronics 3, pp. 504-520, 2014.
Stojanovic, et al. "Design of an Oximeter Based on LED-LED Configuration and FPGA Technology", Sensors, 13, 574-586, 2013.
Stuban, et al. "Optimal filter bandwidth for pulse oximetry", Rev. Sci. Instrum. 83, 104708, 2012.
Tamannagari, "Power Efficient Design of Finder-Ring Sensor for Patient Monitoring," Master of Science in Electrical Engineering, The University of Texas at San Antonio, College of Engineering, Department of Electrical Engineering, Dec. 2008, 74 pages.
Tamura et al. "Wearable Photoplethysmographic Sensors—Past and Present", Electronics, 3, 282-302, 2014.
Tofs, et al. "Body-Heat Powered Autonomous Pulse Oximeter", IEEE Sensors, 2006.
Townsend, et al. "Pulse Oximetry", Medical Electronics, 2001.
Tura, et al., "A Medical Wearable Device with Wireless Bluetooth-based Data Transmission", Measurement Science Review, vol. 3, Section 2, 2003.
Vogel, et al. "In-Ear Vital Signs Monitoring Using a Novel Microoptic Reflective Sensor", IEEE Transactions on Information Technology in Biomedicine, vol. 13, No. 6, 2009.
Warren, et al. "Designing Smart Health Care Technology into the Home of the Future", United States: N. p., 1999.
Written Opinion received in International Application No. PCT/US2016/040190, dated Jan. 2, 2018.
Yamashita et al., "Development of a Ring-Type Vital Sign Telemeter," Biotelemetry XIII, Mar. 26-31, 1995, pp. 145-150.
Yan,et al. "An Efficient Motion-Resistant Method for Wearable Pulse Oximeter", IEEE Transactions on Information Technology in Biomedicine, vol. 12, No. 3, 2008.
Yang, et al. "A Twenty-Four Hour Tele-Nursing System Using a Ring Sensor", Proc. Of 1998 Int. Conf. On Robotics and Automation, 1998.
Yang, et al. "Development of the Ring Sensor for Healthcare Automation", Robotics and Autonomous Systems, 30, pp. 273-281, 2000.
Yang, et al. "SpO2 and Heart Rate Measurement with Wearable Watch Based on PPG", IEEE, 2015.
Zhai, et al. "A Wireless Sensor Network for Hospital Patient Monitoring", University of Calgary, 2007.
Mar. 25, 2020 First Amended Complaint for (1) Patent Infringement (2) Trade Secret Misappropriation (3) Correction of Inventorship and (4) Ownership of Patents and Demand for Jury Trial, and including Exhibits 13-24 (Exhibits 1-12 and 25-31 comprise copies of publicly available U.S. patents and U.S. patent application publications, and are not included herein for ease of transmission), *Masimo Corporation*and *Cercacor Laboratories, Inc.*v. *Apple Inc.*, Case No. 8:20-cv-00048, pp. 1-94, 983-1043 (total of 156 pages).

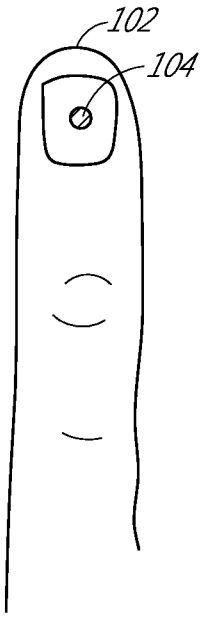

FIG. 1
(PRIOR ART)

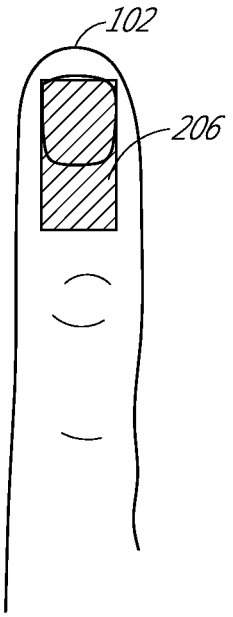

FIG. 2

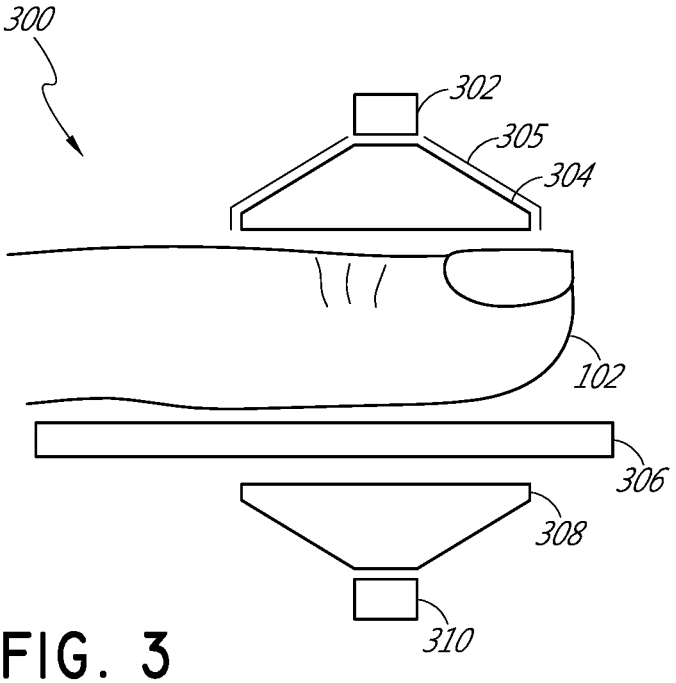

FIG. 3

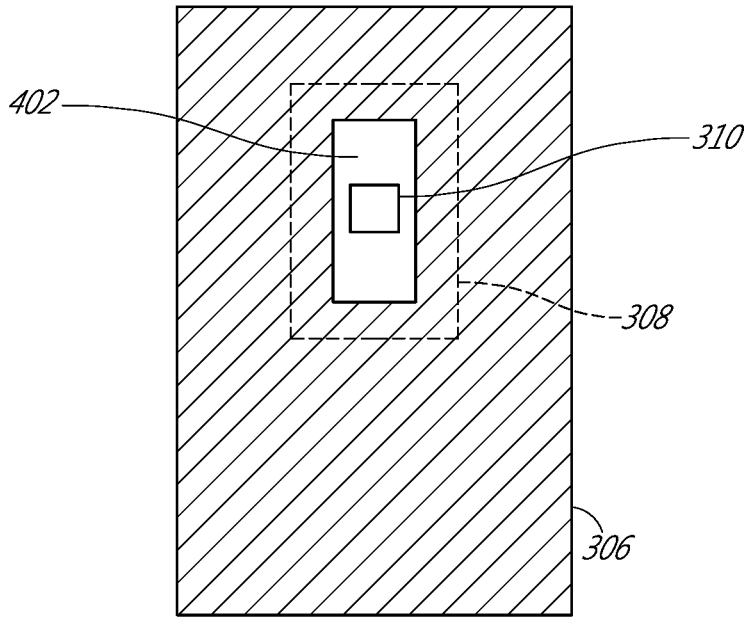

FIG. 4A

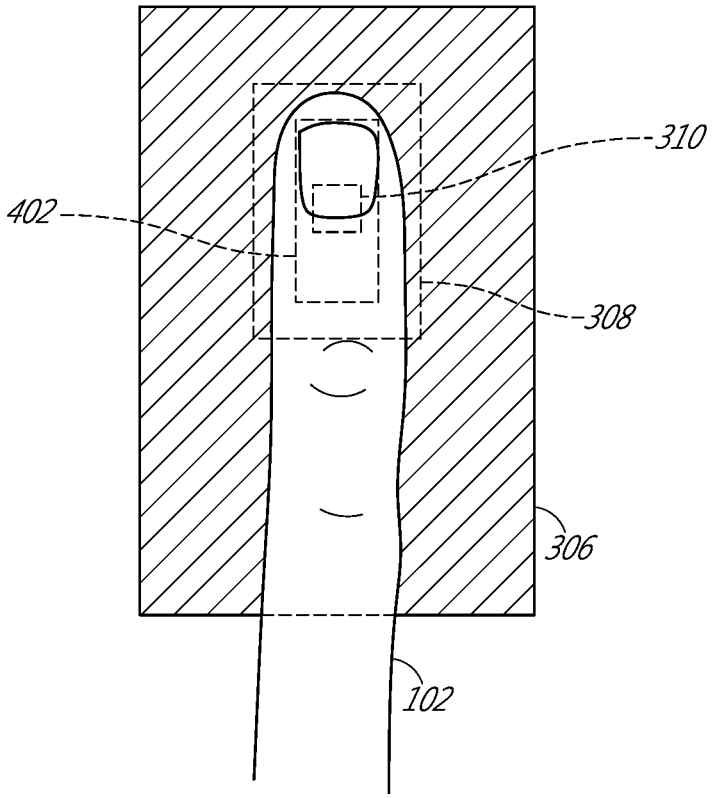

FIG. 4B

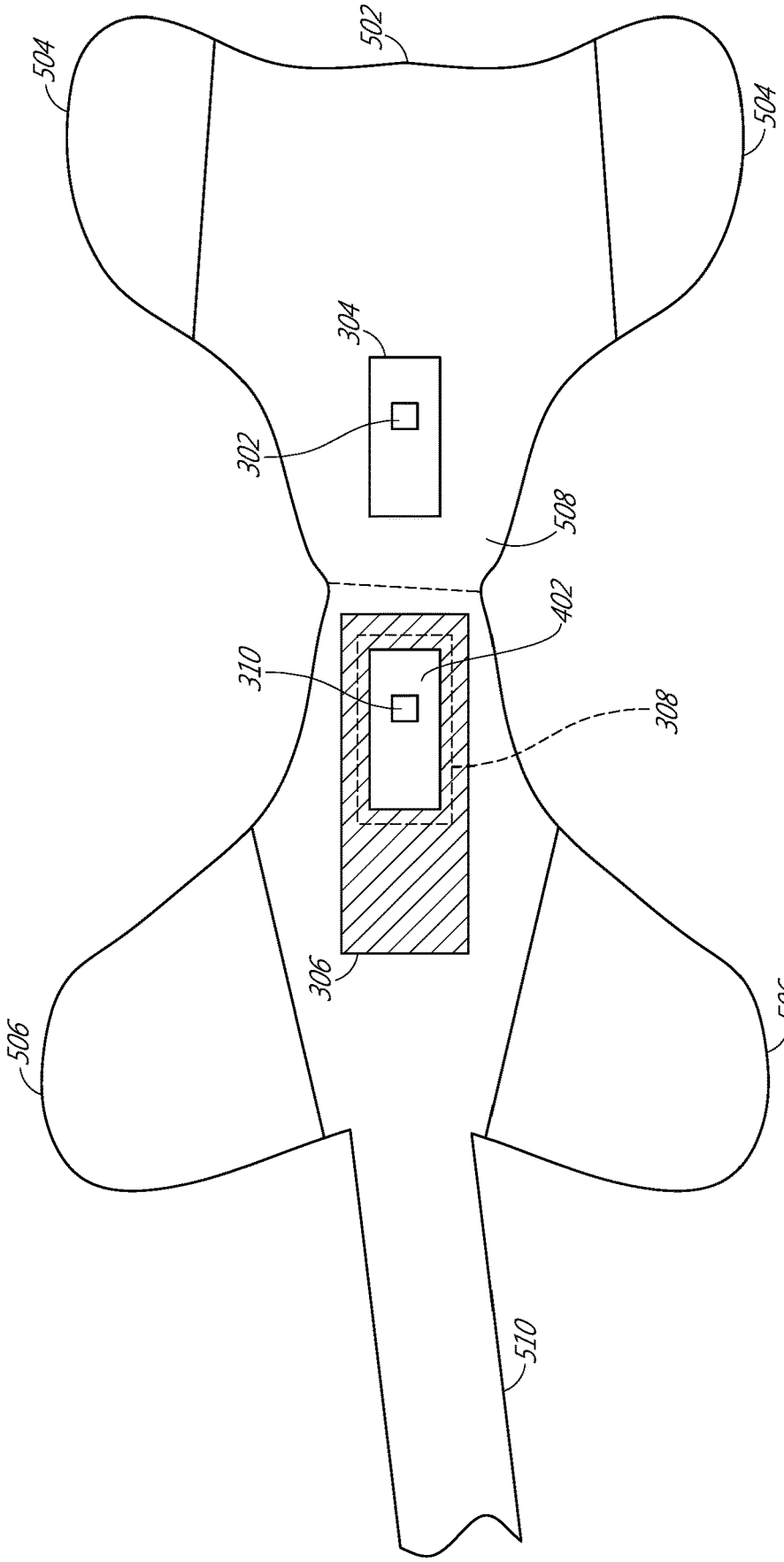

FIG. 5

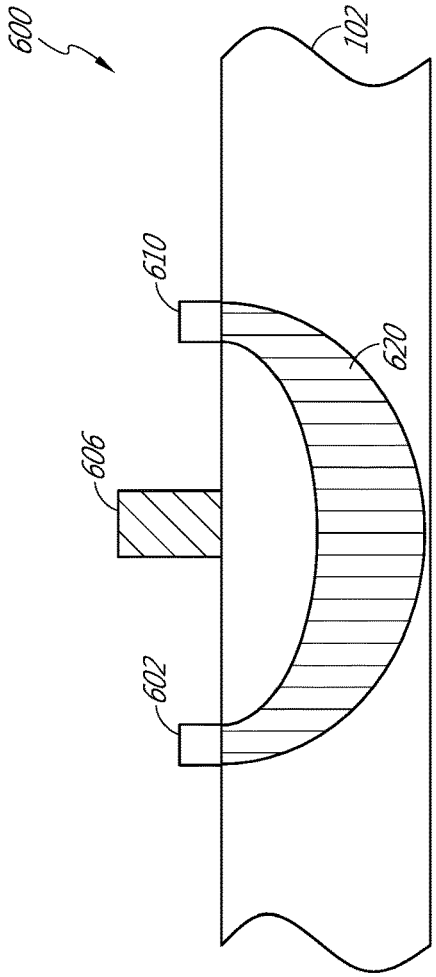

FIG. 6
(PRIOR ART)

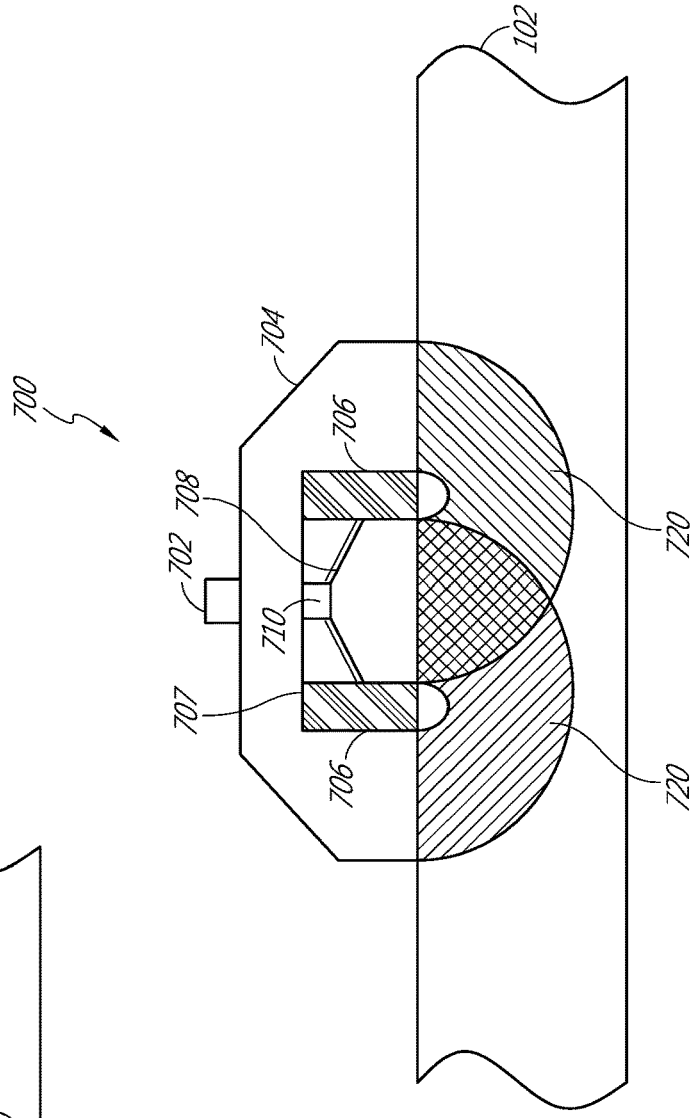

FIG. 7A

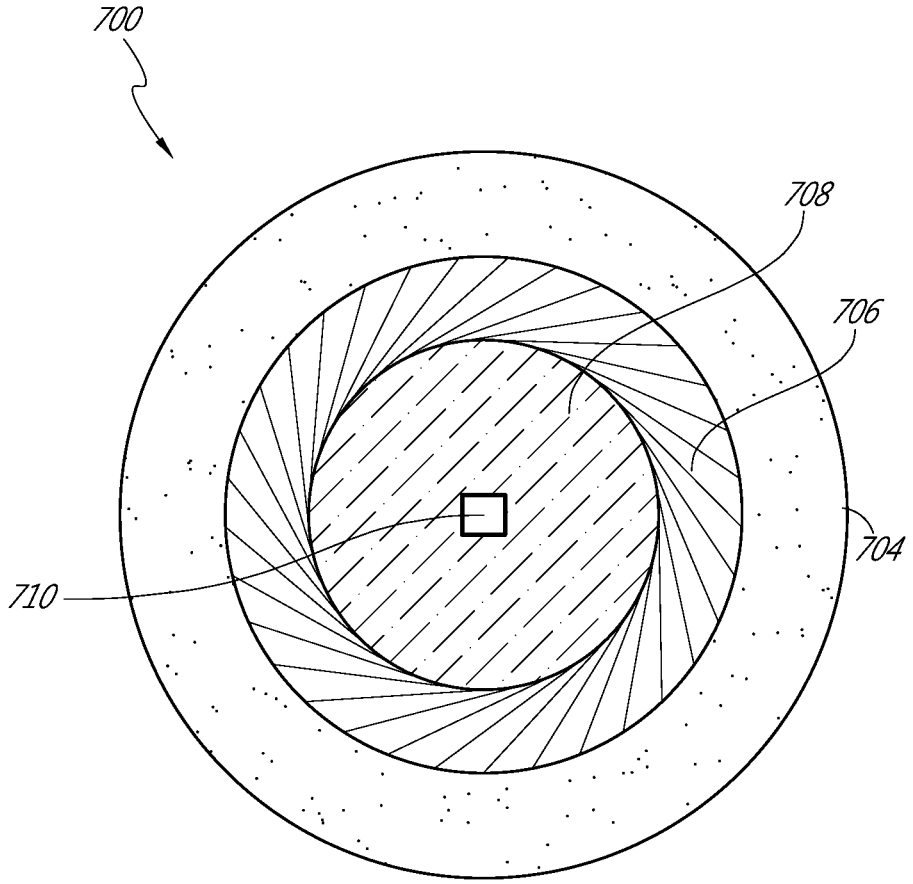

FIG. 7B

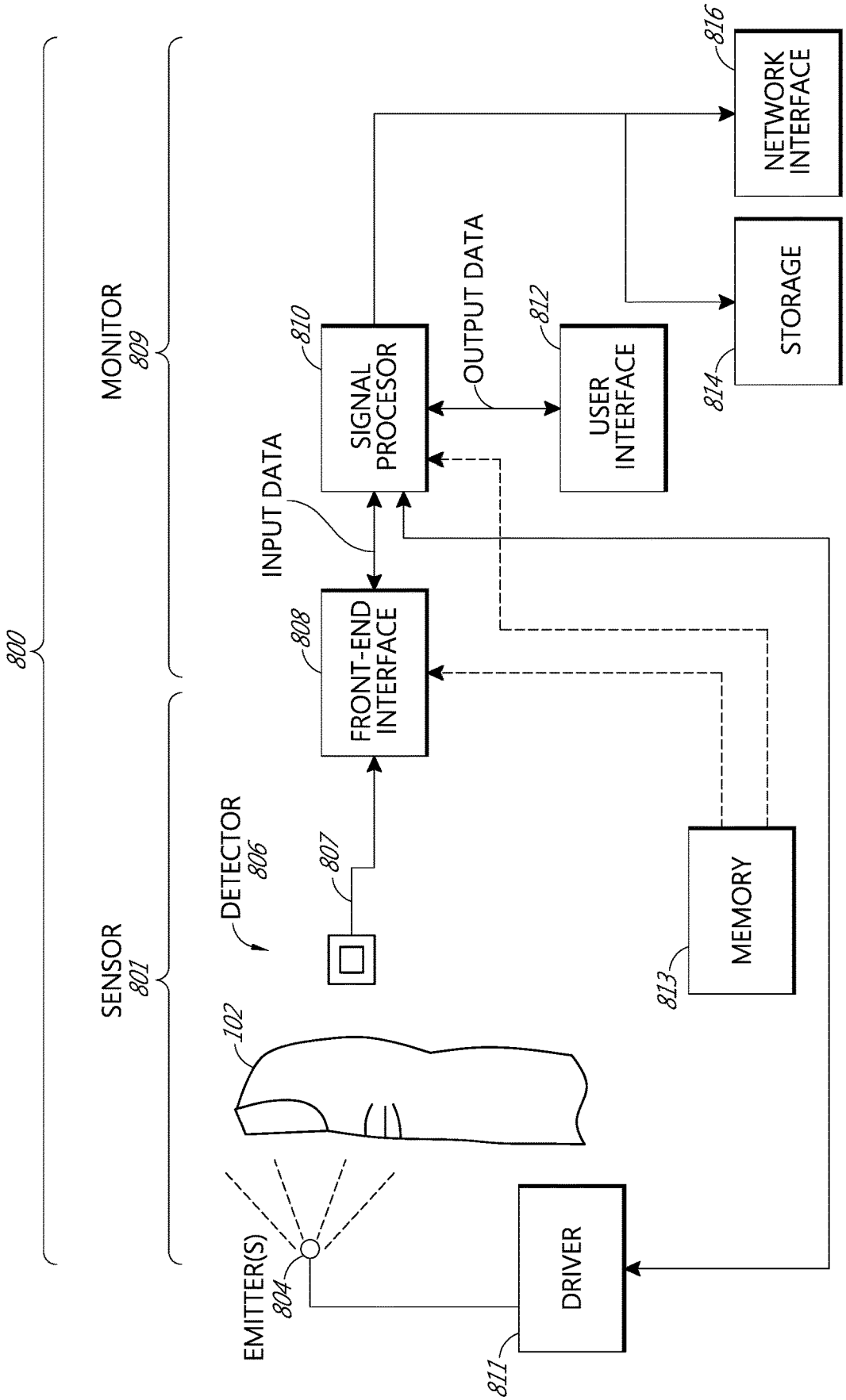
800
MONITOR
809
SENSOR
801
EMITTER(S)
804
102
DETECTOR
806
807
FRONT-END INTERFACE
808
INPUT DATA
SIGNAL PROCESOR
810
OUTPUT DATA
USER INTERFACE
812
NETWORK INTERFACE
816
STORAGE
814
MEMORY
813
DRIVER
811

FIG. 8

PHYSIOLOGICAL MEASUREMENT DEVICES, SYSTEMS, AND METHODS

INCORPORATION BY REFERENCE TO ANY PRIORITY APPLICATIONS

The present application is a continuation of U.S. patent application Ser. No. 16/532,061 filed Aug. 5, 2019, which is a continuation of U.S. patent application Ser. No. 15/195,199 filed Jun. 28, 2016, which claims priority benefit under 35 U.S.C. § 119(e) from U.S. Provisional Application No. 62/188,430, filed Jul. 2, 2015, which is incorporated by reference herein. Any and all applications for which a foreign or domestic priority claim is identified in the Application Data Sheet as filed with the present application are hereby incorporated by reference under 37 CFR 1.57.

FIELD OF THE DISCLOSURE

The present disclosure relates to the field of non-invasive optical-based physiological monitoring sensors, and more particularly to systems, devices and methods for improving the non-invasive measurement accuracy of oxygen saturation, among other physiological parameters.

BACKGROUND

Spectroscopy is a common technique for measuring the concentration of organic and some inorganic constituents of a solution. The theoretical basis of this technique is the Beer-Lambert law, which states that the concentration c_i of an absorbent in solution can be determined by the intensity of light transmitted through the solution, knowing the path-length d_λ, the intensity of the incident light $I_{0,\lambda}$, and the extinction coefficient $\varepsilon_{i,\lambda}$ at a particular wavelength λ.

In generalized form, the Beer-Lambert law is expressed as:

$$I_\lambda = I_{0,\lambda} e^{-d_\lambda \cdot \mu_{a,\lambda}} \tag{1}$$

$$\mu_{a,\lambda} = \sum_{i=1}^{n} \varepsilon_{i,\lambda} \cdot c_i \tag{2}$$

where $\mu_{\alpha,\lambda}$ is the bulk absorption coefficient and represents the probability of absorption per unit length. The minimum number of discrete wavelengths that are required to solve equations 1 and 2 is the number of significant absorbers that are present in the solution.

A practical application of this technique is pulse oximetry, which utilizes a noninvasive sensor to measure oxygen saturation and pulse rate, among other physiological parameters. Pulse oximetry relies on a sensor attached externally to the patient to output signals indicative of various physiological parameters, such as a patient's blood constituents and/or analytes, including for example a percent value for arterial oxygen saturation, among other physiological parameters. The sensor has an emitter that transmits optical radiation of one or more wavelengths into a tissue site and a detector that responds to the intensity of the optical radiation after absorption by pulsatile arterial blood flowing within the tissue site. Based upon this response, a processor determines the relative concentrations of oxygenated hemoglobin (HbO_2) and deoxygenated hemoglobin (Hb) in the blood so as to derive oxygen saturation, which can provide early detection of potentially hazardous decreases in a patient's oxygen supply.

A pulse oximetry system generally includes a patient monitor, a communications medium such as a cable, and/or a physiological sensor having one or more light emitters and a detector, such as one or more light-emitting diodes (LEDs) and a photodetector. The sensor is attached to a tissue site, such as a finger, toe, earlobe, nose, hand, foot, or other site having pulsatile blood flow which can be penetrated by light from the one or more emitters. The detector is responsive to the emitted light after attenuation or reflection by pulsatile blood flowing in the tissue site. The detector outputs a detector signal to the monitor over the communication medium. The monitor processes the signal to provide a numerical readout of physiological parameters such as oxygen saturation (SpO2) and/or pulse rate. A pulse oximetry sensor is described in U.S. Pat. No. 6,088,607 entitled Low Noise Optical Probe; pulse oximetry signal processing is described in U.S. Pat. Nos. 6,650,917 and 6,699,194 entitled Signal Processing Apparatus and Signal Processing Apparatus and Method, respectively; a pulse oximeter monitor is described in U.S. Pat. No. 6,584,336 entitled Universal/Upgrading Pulse Oximeter; all of which are assigned to Masimo Corporation, Irvine, Calif., and each is incorporated by reference herein in its entirety.

There are many sources of measurement error introduced to pulse oximetry systems. Some such sources of error include the pulse oximetry system's electronic components, including emitters and detectors, as well as chemical and structural physiological differences between patients. Another source of measurement error is the effect of multiple scattering of photons as the photons pass through the patient's tissue (arterial blood) and arrive at the sensor's light detector.

SUMMARY

This disclosure describes embodiments of non-invasive methods, devices, and systems for measuring blood constituents, analytes, and/or substances such as, by way of non-limiting example, oxygen, carboxyhemoglobin, methemoglobin, total hemoglobin, glucose, proteins, lipids, a percentage thereof (e.g., saturation), pulse rate, perfusion index, oxygen content, total hemoglobin, Oxygen Reserve Index™ (ORI™) or for measuring many other physiologically relevant patient characteristics. These characteristics can relate to, for example, pulse rate, hydration, trending information and analysis, and the like.

In an embodiment, an optical physiological measurement system includes an emitter configured to emit light of one or more wavelengths. The system also includes a diffuser configured to receive the emitted light, to spread the received light, and to emit the spread light over a larger tissue area than would otherwise be penetrated by the emitter directly emitting light at a tissue measurement site. The tissue measurement site can include, such as, for example, a finger, a wrist, or the like. The system further includes a concentrator configured to receive the spread light after it has been attenuated by or reflected from the tissue measurement site. The concentrator is also configured to collect and concentrate the received light and to emit the concentrated light to a detector. The detector is configured to detect the concentrated light and to transmit a signal indicative of the detected light. The system also includes a processor configured to receive the transmitted signal indicative of the detected light and to determine, based on an

amount of absorption, an analyte of interest, such as, for example, arterial oxygen saturation or other parameter, in the tissue measurement site.

In certain embodiments of the present disclosure, the diffuser comprises glass, ground glass, glass beads, opal glass, or a microlens-based, band-limited, engineered diffuser that can deliver efficient and uniform illumination. In some embodiments the diffuser is further configured to define a surface area shape by which the emitted spread light is distributed onto a surface of the tissue measurement site. The defined surface area shape can include, by way of non-limiting example, a shape that is substantially rectangular, square, circular, oval, or annular, among others.

According to some embodiments, the optical physiological measurement system includes an optical filter having a light-absorbing surface that faces the tissue measurement site. The optical filter also has an opening that is configured to allow the spread light, after being attenuated by the tissue measurement site, to be received by the concentrator. In an embodiment, the opening has dimensions, wherein the dimensions of the opening are similar to the defined surface area shape by which the emitted spread light is distributed onto the surface of the tissue measurement site. In an embodiment, the opening has dimensions that are larger than the defined surface area shape by which the emitted spread light is distributed onto the surface of the tissue measurement site. In other embodiments, the dimensions of the opening in the optical filter are not the same as the diffuser opening, but the dimensions are larger than the detector package.

In other embodiments of the present disclosure, the concentrator comprises glass, ground glass, glass beads, opal glass, or a compound parabolic concentrator. In some embodiments the concentrator comprises a cylindrical structure having a truncated circular conical structure on top. The truncated section is adjacent the detector. The light concentrator is structured to receive the emitted optical radiation, after reflection by the tissue measurement site, and to direct the reflected light to the detector.

In accordance with certain embodiments of the present disclosure, the processor is configured to determine an average level of the light detected by the detector. The average level of light is used to determine a physiological parameter in the tissue measurement site.

According to another embodiment, a method to determine a constituent or analyte in a patient's blood is disclosed. The method includes emitting, from an emitter, light of at least one wavelength; spreading, with a diffuser, the emitted light and emitting the spread light from the diffuser to a tissue measurement site; receiving, by a concentrator, the spread light after the spread light has been attenuated by the tissue measurement site; concentrating, by the concentrator, the received light and emitting the concentrated light from the concentrator to a detector; detecting, with the detector, the emitted concentrated light; transmitting, from the detector, a signal responsive to the detected light; receiving, by a processor, the transmitted signal responsive to the detected light; and processing, by the processor, the received signal responsive to the detected light to determine a physiological parameter.

In some embodiments, the method to determine a constituent or analyte in a patient's blood includes filtering, with a light-absorbing detector filter, scattered portions of the emitted spread light. According to an embodiment, the light-absorbing detector filter is substantially rectangular in shape and has outer dimensions in the range of approximately 1-5 cm in width and approximately 2-8 cm in length, and has an opening through which emitted light may pass, the opening having dimensions in the range of approximately 0.25-3 cm in width and approximately 1-7 cm in length. In another embodiment, the light-absorbing detector filter is substantially square in shape and has outer dimensions in the range of approximately 0.25-10 cm^2, and has an opening through which emitted light may pass, the opening having dimensions in the range of approximately 0.1-8 cm^2. In yet another embodiment, the light-absorbing detector filter is substantially rectangular in shape and has outer dimensions of approximately 3 cm in width and approximately 6 cm in length, and has an opening through which emitted light may pass, the opening having dimensions of approximately 1.5 cm in width and approximately 4 cm in length.

In still other embodiments of the method to determine a constituent or analyte in a patient's blood, spreading, with a diffuser, the emitted light and emitting the spread light from the diffuser to a tissue measurement site is performed by at least one of a glass diffuser, a ground glass diffuser, a glass bead diffuser, an opal glass diffuser, and an engineered diffuser. In some embodiments the emitted spread light is emitted with a substantially uniform intensity profile. And in some embodiments, emitting the spread light from the diffuser to the tissue measurement site includes spreading the emitted light so as to define a surface area shape by which the emitted spread light is distributed onto a surface of the tissue measurement site.

According to yet another embodiment, a pulse oximeter is disclosed. The pulse oximeter includes an emitter configured to emit light at one or more wavelengths. The pulse oximeter also includes a diffuser configured to receive the emitted light, to spread the received light, and to emit the spread light directed at a tissue measurement sight. The pulse oximeter also includes a detector configured to detect the emitted spread light after being attenuated by or reflected from the tissue measurement site and to transmit a signal indicative of the detected light. The pulse oximeter also includes a processor configured to receive the transmitted signal and to process the received signal to determine an average absorbance of a blood constituent or analyte in the tissue measurement site over a larger measurement site area than can be performed with a point light source or point detector. In some embodiments, the diffuser is further configured to define a surface area shape by which the emitted spread light is distributed onto a surface of the tissue measurement site, and the detector is further configured to have a detection area corresponding to the defined surface area shape by which the emitted spread light is distributed onto the surface of the tissue measurement site. According to some embodiments, the detector comprises an array of detectors configured to cover the detection area. In still other embodiments, the processor is further configured to determine an average of the detected light.

For purposes of summarizing, certain aspects, advantages and novel features of the disclosure have been described herein. It is to be understood that not necessarily all such advantages can be achieved in accordance with any particular embodiment of the systems, devices and/or methods disclosed herein. Thus, the subject matter of the disclosure herein can be embodied or carried out in a manner that achieves or optimizes one advantage or group of advantages as taught herein without necessarily achieving other advantages as can be taught or suggested herein.

BRIEF DESCRIPTION OF THE DRAWINGS

Throughout the drawings, reference numbers can be reused to indicate correspondence between referenced ele-

ments. The drawings are provided to illustrate embodiments of the disclosure described herein and not to limit the scope thereof.

FIG. **1** illustrates a conventional approach to two-dimensional pulse oximetry in which the emitter is configured to emit optical radiation as a point optical source.

FIG. **2** illustrates the disclosed three-dimensional approach to pulse oximetry in which the emitted light irradiates a substantially larger volume of tissue as compared to the point source approach described with respect to FIG. **1**.

FIG. **3** illustrates schematically a side view of a three-dimensional pulse oximetry sensor according to an embodiment of the present disclosure.

FIG. **4**A is a top view of a portion of a three-dimensional pulse oximetry sensor according to an embodiment of the present disclosure.

FIG. **4**B illustrates the top view of a portion of the three-dimensional pulse oximetry sensor shown in FIG. **4**A, with the addition of a tissue measurement site in operational position.

FIG. **5** illustrates a top view of a three-dimensional pulse oximetry sensor according to an embodiment of the present disclosure.

FIG. **6** illustrates a conventional two-dimensional approach to reflective pulse oximetry in which the emitter is configured to emit optical radiation as a point optical source.

FIG. **7**A is a simplified schematic side view illustration of a reflective three-dimensional pulse oximetry sensor according to an embodiment of the present disclosure.

FIG. **7**B is a simplified schematic top view illustration of the three-dimensional reflective pulse oximetry sensor of FIG. **7**A.

FIG. **8** illustrates a block diagram of an example pulse oximetry system capable of noninvasively measuring one or more blood analytes in a monitored patient, according to an embodiment of the disclosure.

DETAILED DESCRIPTION

FIG. **1** illustrates schematically a conventional pulse oximetry sensor having a two-dimensional (2D) approach to pulse oximetry. As illustrated, the emitter **104** is configured to emit optical radiation as a point optical source, i.e., an optical radiation source that has negligible dimensions such that it may be considered as a point. This approach is referred to herein as "two-dimensional" pulse oximetry because it applies a two-dimensional analytical model to the three-dimensional space of the tissue measurement site **102** of the patient. Point optical sources feature a defined, freely selectable, and homogeneous light beam area. Light beams emitted from LED point sources often exhibit a strong focus which can produce a usually sharply-defined and evenly-lit illuminated spot often with high intensity dynamics. Illustratively, when looking at the surface of the tissue measurement site **102** (or "sample tissue"), which in this example is a finger, a small point-like surface area of tissue **204** is irradiated by a point optical source. In some embodiments, the irradiated circular area of the point optical source is in the range between 8 and 150 microns. Illustratively, the emitted point optical source of light enters the tissue measurement site **102** as a point of light. As the light penetrates the depth of the tissue **102**, it does so as a line or vector, representing a two-dimensional construct within a three-dimensional structure, namely the patient's tissue **102**.

Use of a point optical source is believed to reduce variability in light pathlength which would lead to more accurate oximetry measurements. However, in practice, photons do not travel in straight paths. Instead, the light particles scatter, bouncing around between various irregular objects (such as, for example, red blood cells) in the patient's blood. Accordingly, photon pathlengths vary depending on, among other things, their particular journeys through and around the tissue at the measurement site **102**. This phenomenon is referred to as "multiple scattering." In a study, the effects of multiple scattering were examined by comparing the results of photon diffusion analysis with those obtained using an analysis based on the Beer-Lambert law, which neglects multiple scattering in the determination of light pathlength. The study found that that the difference between the average lengths of the paths traveled by red and infrared photons makes the oximeter's calibration curve (based on measurements obtained from normal subjects) sensitive to the total attenuation coefficients of the tissue in the two wavelength bands used for pulse oximetry, as well as to absorption by the pulsating arterial blood.

FIG. **2** illustrates schematically the disclosed systems, devices, and methods to implement three-dimensional (3D) pulse oximetry in which the emitted light irradiates a larger volume of tissue at the measurement site **102** as compared to the 2D point optical source approach described with respect to FIG. **1**. In an embodiment, again looking at the surface of the tissue measurement site **102**, the irradiated surface area **206** of the measurement site **102** is substantially rectangular in shape with dimensions in the range of approximately 0.25-3 cm in width and approximately 1-6 cm in length. In another embodiment, the irradiated surface area **206** of the measurement site **102** is substantially rectangular in shape and has dimensions of approximately 1.5 cm in width and approximately 2 cm in length. In another embodiment, the irradiated surface area **206** of the measurement site **102** is substantially rectangular in shape and has dimensions of approximately 0.5 cm in width and approximately 1 cm in length. In another embodiment, the irradiated surface area **206** of the measurement site **102** is substantially rectangular in shape has dimensions of approximately 1 cm in width and approximately 1.5 cm in length. In yet another embodiment, the irradiated surface area **206** of the measurement site **102** is substantially square in shape and has dimensions in a range of approximately 0.25-9 cm^2. In certain embodiments, the irradiated surface area **206** of the measurement site **102** is within a range of approximately 0.5-2 cm in width, and approximately 1-4 cm in length. Of course a skilled artisan will appreciate that many other shapes and dimensions of irradiated surface area **206** can be used. Advantageously, by irradiating the tissue measurement site **102** with a surface area **206**, the presently disclosed systems, devices, and methods apply a three-dimensional analytical model to the three-dimensional structure being measured, namely, the patient's sample tissue **102**.

According to the Beer-Lambert law, the amount of light absorbed by a substance is proportional to the concentration of the light-absorbing substance in the irradiated solution (i.e., arterial blood). Advantageously, by irradiating a larger volume of tissue **102**, a larger sample size of light attenuated (or reflected) by the tissue **102** is measured. The larger, 3D sample provides a data set that is more representative of the complete interaction of the emitted light as it passes through the patient's blood as compared to the 2D point source approach described above with respect to FIG. **1**. By taking an average of the detected light, as detected over a surface area substantially larger than a single point, the disclosed pulse oximetry systems, devices, and methods will yield a

more accurate measurement of the emitted light absorbed by the tissue, which will lead to a more accurate oxygen saturation measurement.

FIG. **3** illustrates schematically a side view of a pulse oximetry 3D sensor **300** according to an embodiment of the present disclosure. In the illustrated embodiment, the 3D sensor **300** irradiates the tissue measurement site **102** and detects the emitted light, after being attenuated by the tissue measurement site **102**. In other embodiments, for example, as describe below with respect to FIGS. **7**A and **7**B, the 3D sensor **300** can be arranged to detect light that is reflected by the tissue measurement site **102**. The 3D sensor **300** includes an emitter **302**, a light diffuser **304**, a light-absorbing detector filter **306**, a light concentrator **308**, and a detector **310**. In some optional embodiments, the 3D sensor **300** further includes a reflector **305**. The reflector **305** can be a metallic reflector or other type of reflector. Reflector **305** can be a coating, film, layer or other type of reflector. The reflector **305** can serve as a reflector to prevent emitted light from emitting out of a top portion of the light diffuser **304** such that light from the emitter **302** is directed in the tissue rather than escaping out of a side or top of the light diffuser **304**. Additionally, the reflector **305** can prevent ambient light from entering the diffuser **304** which might ultimately cause errors within the detected light. The reflector **305** also prevent light piping that might occur if light from the detector **302** is able to escape from the light diffuser **304** and be pipped around a sensor securement mechanism to detector **310** without passing through the patient's tissue **102**.

The emitter **302** can serve as the source of optical radiation transmitted towards the tissue measurement site **102**. The emitter **302** can include one or more sources of optical radiation, such as LEDs, laser diodes, incandescent bulbs with appropriate frequency-selective filters, combinations of the same, or the like. In an embodiment, the emitter **302** includes sets of optical sources that are capable of emitting visible and near-infrared optical radiation. In some embodiments, the emitter **302** transmits optical radiation of red and infrared wavelengths, at approximately 650 nm and approximately 940 nm, respectively. In some embodiments, the emitter **302** includes a single source optical radiation.

The light diffuser **304** receives the optical radiation emitted from the emitter **302** and spreads the optical radiation over an area, such as the area **206** depicted in FIG. **2**. In some embodiments, the light diffuser **304** is a beam shaper that can homogenize the input light beam from the emitter **302**, shape the output intensity profile of the received light, and define the way (e.g., the shape or pattern) the emitted light is distributed to the tissue measurement site **102**. Examples of materials that can be used to realize the light diffuser **304** include, without limitation, a white surface, glass, ground glass, glass beads, polytetrafluoroethylene (also known as Teflon®, opal glass, and greyed glass, to name a few. Additionally, engineered diffusers can be used to realize the diffuser **304** by providing customized light shaping with respect to intensity and distribution. Such diffusers can, for example, deliver substantially uniform illumination over a specified target area (such as, for example, irradiated surface area **206**) in an energy-efficient manner. Examples of engineered diffusers can include molded plastics with specific shapes, patterns or textures designed to diffuse the emitter light across the entirety of the patient's tissue surface.

Advantageously, the diffuser **304** can receive emitted light in the form of a point optical source and spread the light to fit a desired surface area on a plane defined by the surface of the tissue measurement site **102**. In an embodiment, the diffuser **304** is made of ground glass which spreads the emitted light with a Gausian intensity profile. In another embodiment the diffuser **304** includes glass beads. In some embodiments, the diffuser **304** is constructed so as to diffuse the emitted light in a Lambertian pattern. A Lambertian pattern is one in which the radiation intensity is substantially constant throughout the area of dispersion. One such diffuser **304** is made from opal glass. Opal glass is similar to ground glass, but has one surface coated with a milky white coating to diffuse light evenly. In an embodiment, the diffuser **304** is capable of distributing the emitted light on the surface of a plane (e.g., the surface of the tissue measurement site **102**) in a predefined geometry (e.g., a rectangle, square, or circle), and with a substantially uniform intensity profile and energy distribution. In some embodiments, the efficiency, or the amount of light transmitted by the diffuser **304**, is greater than 70% of the light emitted by the emitter **302**. In some embodiments, the efficiency is greater than 90% of the emitted light. Other optical elements known in the art may be used for the diffuser **304**.

In an embodiment, the diffuser **304** has a substantially rectangular shape having dimensions within a range of approximately 0.5-2 cm in width and approximately 1-4 centimeters in length. In another embodiment, the substantially rectangular shape of the diffuser **304** has dimensions of approximately 0.5 cm in width and approximately 1 cm in length. In another embodiment, the diffuser's **304** substantially rectangular shape has dimensions of approximately 1 cm in width and approximately 1.5 cm in length. In yet another embodiment, the diffuser **304** has a substantially square shape with dimensions in the range of approximately 0.25-10 cm^2.

The light-absorbing detector filter **306**, which is also depicted in FIG. **4**A in a top view, is a planar surface having an opening **402** through which the emitted light may pass after being attenuated by the tissue measurement site **102**. In the depicted embodiment, the opening **402** is rectangular-shaped, with dimensions substantially similar to the irradiated surface area **206**. According to an embodiment, the light-absorbing detector filter is substantially rectangular in shape and has outer dimensions of 4 cm in width and 8 cm in length, and has an opening through which emitted light may pass, the opening having dimensions of 2 cm in width and 5 cm in length. In another embodiment, the light-absorbing detector filter is substantially rectangular in shape and has outer dimensions in the range of 1-3 cm in width and 2-8 cm in length, and has an opening through which emitted light may pass, the opening having dimensions in the range of 0.25-2 cm in width and 1-4 cm in length. In yet another embodiment, the light-absorbing detector filter is substantially rectangular in shape and has outer dimensions of 3 cm in width and 6 cm in length, and has an opening through which emitted light may pass, the opening having dimensions of 1.5 cm in width and 4 cm in length.

The top surface of the light-absorbing filter **306** (facing the tissue measurement site **102** and the emitter **302**) is coated with a material that absorbs light, such as, for example, black pigment. Many other types of light-absorbing materials are well known in the art and can be used with the detector filter **306**. During operation, light emitted from the emitter **302** can reflect off of the tissue measurement site **102** (or other structures within the 3D sensor **300**) to neighboring portions of the 3D sensor **300**. If those neighboring portions of the 3D sensor **300** possess reflective surfaces, then the light can reflect back to the tissue measurement site **102**, progress through the tissue and arrive at the detector **310**. Such multiple scattering can result in detecting photons whose pathlengths are considerably lon-

ger than most of the light that is detected, thereby introducing variations in pathlength which will affect the accuracy of the measurements of the pulse oximetry 3D sensor **300**. Advantageously, the light-absorbing filter **306** reduces or eliminates the amount of emitted light that is reflected in this manner because it absorbs such reflected light, thereby stopping the chain of scattering events. In certain embodiments, the sensor-facing surfaces of other portions of the 3D sensor **300** are covered in light-absorbing material to further decrease the effect of reflective multiple scattering.

The light concentrator **308** is a structure to receive the emitted optical radiation, after attenuation by the tissue measurement site **102**, to collect and concentrate the dispersed optical radiation, and to direct the collected and concentrated optical radiation to the detector **310**. In an embodiment, the light concentrator **308** is made of ground glass or glass beads. In some embodiments, the light concentrator **308** includes a compound parabolic concentrator.

As described above with respect to FIG. **1**, the detector **310** captures and measures light from the tissue measurement site **102**. For example, the detector **310** can capture and measure light transmitted from the emitter **302** that has been attenuated by the tissue in the measurement site **102**. The detector **310** can output a detector signal responsive to the light captured or measured. The detector **310** can be implemented using one or more photodiodes, phototransistors, or the like. In addition, a plurality of detectors **310** can be arranged in an array with a spatial configuration corresponding to the irradiated surface area **206** to capture the attenuated or reflected light from the tissue measurement site.

Referring to FIG. **4**A, a top view of a portion of the 3D sensor **300** is provided. The light-absorbing detector filter **306** is illustrated having a top surface coated with a light-absorbing material. The light-absorbing material can be a black opaque material or coating or any other dark color or coating configured to absorb light. Additionally, a rectangular opening **402** is positioned relative to the light concentrator **308** (shown in phantom) and the detector **310** such that light may pass through the rectangular opening **402**, into the light concentrator **308**, and to the detector **310**. FIG. **4**B illustrates the top view of a portion of the 3D sensor **300** as in FIG. **4**A, with the addition of the tissue measurement site **102** in operational position. Accordingly, the rectangular opening **402**, the light concentrator **308** and the detector **310** are shown in phantom as being under the tissue measurement site **102**. In FIGS. **4**A and **4**B, the light concentrator **308** is shown to have dimensions significantly larger than the dimensions of the rectangular opening **402**. In other embodiments, the dimensions of the light concentrator **308**, the rectangular opening **402**, and the irradiated surface area **206** are substantially similar.

FIG. **5** illustrates a top view of a 3D pulse oximetry sensor **500** according to an embodiment of the present disclosure. The 3D sensor **500** is configured to be worn on a patient's finger **102**. The 3D sensor **500** includes an adhesive substrate **502** having front flaps **504** and rear flaps **506** extending outward from a center portion **508** of the 3D sensor **500**. The center portion **508** includes components of the 3D pulse oximetry sensor **300** described with respect to FIGS. **3**, **4**A and **4**B. On the front side of the adhesive substrate **502** the emitter **302** and the light diffuser **304** are positioned. On the rear side of the adhesive substrate **502** the light-absorbent detector filter **306**, the light concentrator **308** and the detector **310** are positioned. In use, the patient's finger serving as the tissue measurement site **102** is positioned over the rectangular opening **402** such that when the front portion of the adhesive substrate is folded over on top of the patient's finger **102**, the emitter **302** and the light diffuser **304** are aligned with the measurement site **102**, the filter **306**, the light concentrator **308** and the detector **310**. Once alignment is established, the front and rear flaps **504**, **506** can be wrapped around the finger measurement site **102** such that the adhesive substrate **502** provides a secure contact between the patient's skin and the 3D sensor **500**. FIG. **5** also illustrates an example of a sensor connector cable **510** which is used to connect the 3D sensor **500** to a monitor **809**, as described with respect to FIG. **8**.

FIG. **6** is a simplified schematic illustration of a conventional, 2D approach to reflective pulse oximetry in which the emitter is configured to emit optical radiation as a point optical source. Reflective pulse oximetry is a method by which the emitter and detector are located on the same side of the tissue measurement site **102**. Light is emitted into a tissue measurement site **102** and attenuated. The emitted light passes into the tissue **102** and is then reflected back to the same side of the tissue measurement site **102** as the emitter. As illustrated in FIG. **6**, a depicted reflective 2D pulse oximetry sensor **600** includes an emitter **602**, a light block **606**, and a detector **610**. The light block **606** is necessary because the emitter **602** and the detector **610** are located on the same side of the tissue measurement site **102**. Accordingly, the light block **606** prevents incident emitter light, which did not enter the tissue measurement site **102**, from arriving at the detector **610**. The depicted 2D pulse oximetry sensor **600** is configured to emit light as a point source. As depicted in FIG. **6**, a simplified illustration of the light path **620** of the emitted light from the emitter **602**, through the tissue measurement site **102**, and to the detector **610** is provided. Notably, a point source of light is emitted, and a point source of light is detected. As discussed above with respect to FIG. **1**, use of a point optical source can result in substantial measurement error due to pathlength variability resulting from the multiple scatter phenomenon. The sample space provided by a 2D point optical emitter source is not large enough to account for pathlength variability, which will skew measurement results.

FIGS. **7**A and **7**B are simplified schematic side and top views, respectively, of a 3D reflective pulse oximetry sensor **700** according to an embodiment of the present disclosure. In the illustrated embodiment, the 3D sensor **700** irradiates the tissue measurement site **102** and detects the emitted light that is reflected by the tissue measurement site **102**. The 3D sensor **700** can be placed on a portion of the patient's body that has relatively flat surface, such as, for example a wrist, because the emitter **702** and detector **710** are on located the same side of the tissue measurement site **102**. The 3D sensor **700** includes an emitter **702**, a light diffuser **704**, a light block **706**, a light concentrator **708**, and a detector **710**.

As previously described, the emitter **702** can serve as the source of optical radiation transmitted towards the tissue measurement site **102**. The emitter **702** can include one or more sources of optical radiation. Such sources of optical radiation can include LEDs, laser diodes, incandescent bulbs with appropriate frequency-selective filters, combinations of the same, or the like. In an embodiment, the emitter **702** includes sets of optical sources that are capable of emitting visible and near-infrared optical radiation. In some embodiments, the emitter **702** transmits optical radiation of red and infrared wavelengths, at approximately 650 nm and approximately 940 nm, respectively. In some embodiments, the emitter **702** includes a single source of optical radiation.

The light diffuser **704** receives the optical radiation emitted from the emitter **702** and homogenously spreads the optical radiation over a wide, donut-shaped area, such as the

area outlined by the light diffuser **704** as depicted in FIG. 7B. Advantageously, the diffuser **704** can receive emitted light in the form of a 2D point optical source (or any other form) and spread the light to fit the desired surface area on a plane defined by the surface of the tissue measurement site **102**. In an embodiment, the diffuser **704** is made of ground glass or glass beads. A skilled artisan will understand that may other materials can be used to make the light diffuser **704**.

The light blocker **706** includes an annular ring having a cover portion **707** sized and shaped to form a light isolation chamber for the light concentrator **708** and the detector **710**. (For purposes of illustration, the light block cover **707** is not illustrated in FIG. 7B.) The light blocker **706** and the cover **707** can be made of any material that optically isolates the light concentrator **708** and the detector **710**. The light isolation chamber formed by the light blocker **706** and cover **707** ensures that the only light detected by the detector **710** is light that is reflected from the tissue measurement site.

The light concentrator **708** is a cylindrical structure with a truncated circular conical structure on top, the truncated section of which of which is adjacent the detector **710**. The light concentrator **708** is structured to receive the emitted optical radiation, after reflection by the tissue measurement site **102**, and to direct the reflected light to the detector **710**. In an embodiment, the light concentrator **708** is made of ground glass or glass beads. In some embodiments, the light concentrator **708** includes a compound parabolic concentrator.

As previously described, the detector **710** captures and measures light from the tissue measurement site **102**. For example, the detector **710** can capture and measure light transmitted from the emitter **702** that has been reflected from the tissue in the measurement site **102**. The detector **710** can output a detector signal responsive to the light captured or measured. The detector **710** can be implemented using one or more photodiodes, phototransistors, or the like. In addition, a plurality of detectors **710** can be arranged in an array with a spatial configuration corresponding to the irradiated surface area depicted in FIG. 7B by the light concentrator **708** to capture the reflected light from the tissue measurement site.

Advantageously, the light path **720** illustrated in FIG. 7A depicts a substantial sample of reflected light that enter the light isolation chamber formed by the light blocker **706** and cover **707**. As previously discussed, the large sample of reflected light (as compared to the reflected light collected using the 2D point optical source approach) provides the opportunity to take an average of the detected light, to derive a more accurate measurement of the emitted light absorbed by the tissue, which will lead to a more accurate oxygen saturation measurement.

Referring now to FIG. 7B, a top view of the 3D sensor **700** is illustrated with both the emitter **702** and the light blocker cover **707** removed for ease of illustration. The outer ring illustrates the footprint of the light diffuser **704**. As light is emitted from the emitter **702** (not shown in FIG. 7B), it is diffused homogenously and directed to the tissue measurement site **102**. The light blocker **706** forms the circular wall of a light isolation chamber to keep incident light from being sensed by the detector **710**. The light blocker cover **707** blocks incidental light from entering the light isolation chamber from above. The light concentrator **708** collects the reflected light from the tissue measurement site **102** and funnels it upward toward the detector **710** at the center of the 3D sensor **700**.

FIG. **8** illustrates an example of an optical physiological measurement system **800**, which may also be referred to herein as a pulse oximetry system **800**. In certain embodiments, the pulse oximetry system **800** noninvasively measures a blood analyte, such as oxygen, carboxyhemoglobin, methemoglobin, total hemoglobin, glucose, proteins, lipids, a percentage thereof (e.g., saturation), pulse rate, perfusion index, oxygen content, total hemoglobin, Oxygen Reserve Index™ (ORI™) or many other physiologically relevant patient characteristics. These characteristics can relate to, for example, pulse rate, hydration, trending information and analysis, and the like. The system **800** can also measure additional blood analytes and/or other physiological parameters useful in determining a state or trend of wellness of a patient.

The pulse oximetry system **800** can measure analyte concentrations at least in part by detecting optical radiation attenuated by tissue at a measurement site **102**. The measurement site **102** can be any location on a patient's body, such as a finger, foot, earlobe, wrist, forehead, or the like.

The pulse oximetry system **800** can include a sensor **801** (or multiple sensors) that is coupled to a processing device or physiological monitor **809**. In an embodiment, the sensor **801** and the monitor **809** are integrated together into a single unit. In another embodiment, the sensor **801** and the monitor **809** are separate from each other and communicate with one another in any suitable manner, such as via a wired or wireless connection. The sensor **801** and monitor **809** can be attachable and detachable from each other for the convenience of the user or caregiver, for ease of storage, sterility issues, or the like.

In the depicted embodiment shown in FIG. **8**, the sensor **801** includes an emitter **804**, a detector **806**, and a front-end interface **808**. The emitter **804** can serve as the source of optical radiation transmitted towards measurement site **102**. The emitter **804** can include one or more sources of optical radiation, such as light emitting diodes (LEDs), laser diodes, incandescent bulbs with appropriate frequency-selective filters, combinations of the same, or the like. In an embodiment, the emitter **804** includes sets of optical sources that are capable of emitting visible and near-infrared optical radiation.

The pulse oximetry system **800** also includes a driver **811** that drives the emitter **804**. The driver **111** can be a circuit or the like that is controlled by the monitor **809**. For example, the driver **811** can provide pulses of current to the emitter **804**. In an embodiment, the driver **811** drives the emitter **804** in a progressive fashion, such as in an alternating manner. The driver **811** can drive the emitter **804** with a series of pulses for some wavelengths that can penetrate tissue relatively well and for other wavelengths that tend to be significantly absorbed in tissue. A wide variety of other driving powers and driving methodologies can be used in various embodiments. The driver **811** can be synchronized with other parts of the sensor **801** to minimize or reduce jitter in the timing of pulses of optical radiation emitted from the emitter **804**. In some embodiments, the driver **811** is capable of driving the emitter **804** to emit optical radiation in a pattern that varies by less than about 10 parts-per-million.

The detector **806** captures and measures light from the tissue measurement site **102**. For example, the detector **806** can capture and measure light transmitted from the emitter **804** that has been attenuated or reflected from the tissue at the measurement site **102**. The detector **806** can output a detector signal **107** responsive to the light captured and measured. The detector **806** can be implemented using one

or more photodiodes, phototransistors, or the like. In some embodiments, a detector **806** is implemented in detector package to capture and measure light from the tissue measurement site **102** of the patient. The detector package can include a photodiode chip mounted to leads and enclosed in an encapsulant. In some embodiments, the dimensions of the detector package are approximately 2 square centimeters. In other embodiments, the dimensions of the detector package are approximately 1.5 centimeters in width and approximately 2 centimeters in length.

The front-end interface **808** provides an interface that adapts the output of the detectors **806**, which is responsive to desired physiological parameters. For example, the front-end interface **808** can adapt the signal **807** received from the detector **806** into a form that can be processed by the monitor **809**, for example, by a signal processor **810** in the monitor **809**. The front-end interface **808** can have its components assembled in the sensor **801**, in the monitor **809**, in a connecting cabling (if used), in combinations of the same, or the like. The location of the front-end interface **808** can be chosen based on various factors including space desired for components, desired noise reductions or limits, desired heat reductions or limits, and the like.

The front-end interface **808** can be coupled to the detector **806** and to the signal processor **810** using a bus, wire, electrical or optical cable, flex circuit, or some other form of signal connection. The front-end interface **808** can also be at least partially integrated with various components, such as the detectors **806**. For example, the front-end interface **808** can include one or more integrated circuits that are on the same circuit board as the detector **806**. Other configurations can also be used.

As shown in FIG. **8**, the monitor **909** can include the signal processor **810** and a user interface, such as a display **812**. The monitor **809** can also include optional outputs alone or in combination with the display **812**, such as a storage device **814** and a network interface **816**. In an embodiment, the signal processor **810** includes processing logic that determines measurements for desired analytes based on the signals received from the detector **806**. The signal processor **810** can be implemented using one or more microprocessors or sub-processors (e.g., cores), digital signal processors, application specific integrated circuits (ASICs), field programmable gate arrays (FPGAs), combinations of the same, and the like.

The signal processor **810** can provide various signals that control the operation of the sensor **801**. For example, the signal processor **810** can provide an emitter control signal to the driver **811**. This control signal can be useful in order to synchronize, minimize, or reduce jitter in the timing of pulses emitted from the emitter **804**. Accordingly, this control signal can be useful in order to cause optical radiation pulses emitted from the emitter **804** to follow a precise timing and consistent pattern. For example, when a transimpedance-based front-end interface **808** is used, the control signal from the signal processor **810** can provide synchronization with an analog-to-digital converter (ADC) in order to avoid aliasing, cross-talk, and the like. As also shown, an optional memory **813** can be included in the front-end interface **808** and/or in the signal processor **810**. This memory **813** can serve as a buffer or storage location for the front-end interface **808** and/or the signal processor **810**, among other uses.

The user interface **812** can provide an output, e.g., on a display, for presentation to a user of the pulse oximetry system **800**. The user interface **812** can be implemented as a touch-screen display, a liquid crystal display (LCD), an organic LED display, or the like. In alternative embodiments, the pulse oximetry system **800** can be provided without a user interface **812** and can simply provide an output signal to a separate display or system.

The storage device **814** and a network interface **816** represent other optional output connections that can be included in the monitor **809**. The storage device **814** can include any computer-readable medium, such as a memory device, hard disk storage, EEPROM, flash drive, or the like. The various software and/or firmware applications can be stored in the storage device **814**, which can be executed by the signal processor **810** or another processor of the monitor **809**. The network interface **816** can be a serial bus port (RS-232/RS-485), a Universal Serial Bus (USB) port, an Ethernet port, a wireless interface (e.g., WiFi such as any 802.1x interface, including an internal wireless card), or other suitable communication device(s) that allows the monitor **809** to communicate and share data with other devices. The monitor **809** can also include various other components not shown, such as a microprocessor, graphics processor, or controller to output the user interface **812**, to control data communications, to compute data trending, or to perform other operations.

Although not shown in the depicted embodiment, the pulse oximetry system **800** can include various other components or can be configured in different ways. For example, the sensor **801** can have both the emitter **804** and detector **806** on the same side of the tissue measurement site **102** and use reflectance to measure analytes.

Although the foregoing disclosure has been described in terms of certain preferred embodiments, many other variations than those described herein will be apparent to those of ordinary skill in the art.

Conditional language used herein, such as, among others, "can," "might," "may," "e.g.," and the like, unless specifically stated otherwise, or otherwise understood within the context as used, is generally intended to convey that certain embodiments include, while other embodiments do not include, certain features, elements and/or states. Thus, such conditional language is not generally intended to imply that features, elements and/or states are in any way required for one or more embodiments or that one or more embodiments necessarily include logic for deciding, with or without author input or prompting, whether these features, elements and/or states are included or are to be performed in any particular embodiment. The terms "comprising," "including," "having," and the like are synonymous and are used inclusively, in an open-ended fashion, and do not exclude additional elements, features, acts, operations, and so forth. Also, the term "or" is used in its inclusive sense (and not in its exclusive sense) so that when used, for example, to connect a list of elements, the term "or" means one, some, or all of the elements in the list. Further, the term "each," as used herein, in addition to having its ordinary meaning, can mean any subset of a set of elements to which the term "each" is applied.

While the above detailed description has shown, described, and pointed out novel features as applied to various embodiments, it will be understood that various omissions, substitutions, and changes in the form and details of the systems, devices or algorithms illustrated can be made without departing from the spirit of the disclosure. As will be recognized, certain embodiments of the disclosure described herein can be embodied within a form that does not provide all of the features and benefits set forth herein, as some features can be used or practiced separately from others.

The term "and/or" herein has its broadest, least limiting meaning which is the disclosure includes A alone, B alone, both A and B together, or A or B alternatively, but does not require both A and B or require one of A or one of B. As used herein, the phrase "at least one of" A, B, "and" C should be construed to mean a logical A or B or C, using a non-exclusive logical or.

The apparatuses and methods described herein may be implemented by one or more computer programs executed by one or more processors. The computer programs include processor-executable instructions that are stored on a non-transitory tangible computer readable medium. The computer programs may also include stored data. Non-limiting examples of the non-transitory tangible computer readable medium are nonvolatile memory, magnetic storage, and optical storage. Although the foregoing disclosure has been described in terms of certain preferred embodiments, other embodiments will be apparent to those of ordinary skill in the art from the disclosure herein. Additionally, other combinations, omissions, substitutions and modifications will be apparent to the skilled artisan in view of the disclosure herein. Accordingly, the present invention is not intended to be limited by the description of the preferred embodiments, but is to be defined by reference to claims.

Additionally, all publications, patents, and patent applications mentioned in this specification are herein incorporated by reference to the same extent as if each individual publication, patent, or patent application were specifically and individually indicated to be incorporated by reference.

What is claimed is:

1. A physiological measurement device comprising:

one or more emitters configured to emit light in an initial light pattern;

an optical transmission material configured to be positioned between the one or more emitters and a tissue measurement site, wherein the optical transmission material is configured to alter a direction of at least a portion of the light emitted from the one or more emitters to shape an output light pattern by which the emitted light is directed toward a surface of the tissue measurement site, wherein the output light pattern comprises a different geometric shape than the initial light pattern;

a plurality of detectors configured to detect at least a portion of the light after passing through tissue, the plurality of detectors further configured to output at least one signal responsive to the detected light;

a light block configured to prevent at least a portion of the light emitted from the one or more emitters from reaching the plurality of detectors without first reaching the tissue;

a surface comprising a dark-colored coating, the surface positioned between the plurality of detectors and the tissue, wherein an opening defined in the dark-colored coating is configured to allow at least a portion of light reflected from the tissue to pass through the surface; and

a processor configured to receive and process one or more signals responsive to the outputted at least one signal and determine a physiological parameter of a user responsive to the one or more signals.

2. The physiological measurement device of claim **1**, wherein the light block comprises an at least partially circular shape, and wherein the one or more emitters are positioned outside the light block and the plurality of detectors are positioned inside the light block.

3. The physiological measurement device of claim **1**, wherein the optical transmission material comprises glass.

4. The physiological measurement device of claim **1**, wherein the optical transmission material comprises plastic.

5. The physiological measurement device of claim **1**, wherein the plurality of detectors are arranged in an array having a spatial configuration corresponding to a shape of a portion of the tissue measurement site bounded by the light block.

6. The physiological measurement device of claim **1**, wherein the dark-colored coating comprises black pigment.

7. The physiological measurement device of claim **1**, wherein the device is configured to wirelessly transmit physiological parameter data to a separate device.

8. The physiological measurement device of claim **1**, further comprising a touch-screen display configured to present information related to the determined physiological parameter.

9. The physiological measurement device of claim **1**, wherein the output light pattern comprises a width and a length, and wherein the width is different than the length.

10. The physiological measurement device of claim **1**, wherein the output light pattern comprises an oval shape.

11. The physiological measurement device of claim **1**, wherein the physiological parameter is oxygen saturation.

12. The physiological measurement device of claim **1**, wherein the physiological parameter is pulse rate.

13. The physiological measurement device of claim **1**, wherein the opening defined in the dark-colored coating comprises a width and a length, and wherein the width is larger than the length.

14. A physiological measurement device comprising:

one or more optical sources configured to emit light of one or more wavelengths in an initial light pattern proximate a wrist of a user;

an optical transmission material configured to be positioned between the one or more optical sources and a tissue measurement site, wherein the optical transmission material is configured to alter a direction of at least a portion of the light emitted from the one or more optical sources to shape an output light pattern by which the emitted light is projected toward a surface of the tissue measurement site, the output light pattern comprising a different geometric shape than the initial light pattern;

a plurality of detectors configured to detect at least a portion of the light after passing through tissue, the plurality of detectors further configured to output at least one signal responsive to the detected light, wherein the one or more optical sources and the plurality of detectors are arranged in a reflectance measurement configuration;

a light block configured to prevent at least a portion of light emitted from the one or more optical sources from reaching the plurality of detectors without first reaching the tissue;

a surface comprising a dark-colored coating, the surface positioned between the plurality of detectors and the tissue, wherein an opening defined in the dark-colored coating is configured to allow at least a portion of light reflected from the tissue to pass through the surface;

a processor configured to receive and process one or more signals responsive to the outputted at least one signal and determine a physiological parameter of the user responsive to the one or more signals; and

a touch-screen display configured to present information responsive to the determined physiological parameter;

wherein the physiological measurement device is configured to wirelessly transmit physiological parameter data to a separate device.

15. The physiological measurement device of claim **14**, wherein the light block comprises an at least partially circular shape, and wherein the one or more optical sources are positioned outside the light block and the plurality of detectors are positioned inside the light block.

16. The physiological measurement device of claim **14**, wherein the optical transmission material comprises at least one of glass and plastic.

17. The physiological measurement device of claim **14**, wherein the output light pattern comprises a width and a length, and wherein the width is different than the length.

18. The physiological measurement device of claim **14**, wherein the physiological parameter is oxygen saturation.

19. The physiological measurement device of claim **14**, wherein the physiological parameter is pulse rate.

20. The physiological measurement device of claim **14**, wherein the opening defined in the dark-colored coating comprises a width and a length, and wherein the width is larger than the length.

21. The physiological measurement device of claim **14**, wherein the plurality of detectors are arranged in an array having a spatial configuration corresponding to a shape of a portion of the tissue measurement site bounded by the light block.

22. A physiological measurement device comprising:

one or more emitters configured to emit light;

a diffuser configured to be positioned between the one or more emitters and a tissue measurement site;

a circular shaped light block;

a plurality of detectors configured to detect at least a portion of the light after the light passes through a portion of the tissue measurement site bounded by the light block, wherein the plurality of detectors are arranged in an array having a spatial configuration corresponding to a shape of the portion of the tissue measurement site bounded by the circular shaped light block, wherein the plurality of detectors are further configured to output at least one signal responsive to the detected light;

wherein the light block is configured to prevent at least a portion of light emitted from the one or more emitters from reaching the plurality of detectors without first reaching tissue; and

a processor configured to receive and process one or more signals responsive to the outputted at least one signal and determine a physiological parameter of the user responsive to the one or more signals.

23. The physiological measurement device of claim **22**, wherein the one or more emitters are configured to emit the light in an initial light pattern, and wherein the diffuser comprises an optical transmission material configured to alter a direction of at least a portion of the light emitted from the one or more emitters to shape an output light pattern by which the emitted light is directed toward a surface of the tissue measurement site, and wherein the output light pattern comprises a different geometric shape than the initial light pattern.

24. The physiological measurement device of claim **22**, wherein the physiological parameter is oxygen saturation.

25. The physiological measurement device of claim **22**, wherein the physiological parameter is pulse rate.

* * * * *