Trials@uspto.gov
Tel: 571-272-7822

Paper 15
Entered: January 30, 2023

UNITED STATES PATENT AND TRADEMARK OFFICE

BEFORE THE PATENT TRIAL AND APPEAL BOARD

APPLE INC.,
Petitioner,

v.

MASIMO CORPORATION,
Patent Owner.

IPR2022-01275
Patent 10,945,648 B2

Before JOSIAH C. COCKS, NEIL T. POWELL, and JAMES A TARTAL, *Administrative Patent Judges.*

POWELL, *Administrative Patent Judge*.

DECISION
Denying Institution of *Inter Partes* Review
35 U.S.C. § 314

I. INTRODUCTION

A. BACKGROUND

Apple Inc. ("Petitioner") filed a Petition for *inter partes* review of claims 1–30 of U.S. Patent No. 10,945,648 B2 (Ex. 1001, "the '648 patent"). Paper 3 ("Pet."). Masimo Corporation ("Patent Owner") filed a Preliminary Response. Paper 10 ("Prelim. Resp.").

Under 35 U.S.C. § 314(a), an *inter partes* review may not be instituted unless the information presented in the Petition and any response thereto shows "there is a reasonable likelihood that the petitioner would prevail with respect to at least 1 of the claims challenged in the petition." Considering the Petition, the Preliminary Response, and the evidence of record, we determine that Petitioner does not show a reasonable likelihood that at least one of the challenged claims is unpatentable. Accordingly, we do not institute *inter partes* review.

B. RELATED PROCEEDINGS

The parties note that the '648 patent is involved in *Masimo Corporation, et al. v. Apple Inc.*, ITC Inv. No. 337-TA-1276. Pet. 94; Paper 5, 1. Additionally, Patent Owner notes that the '648 patent is involved in Apple Inc. v. Masimo Corporation and Sound United, LLC, U.S. District Court for the District of Delaware, Case No. 1:22-cv-01378-MN. Paper 14, 1. The parties also identify a number of related *inter partes* review proceedings. Pet. 95; Paper 5, 3. Additionally, Patent Owner identifies a number of related patents, patent applications, and litigations involving related patents. Paper 5, 1–4.

MASIMO 2008
Apple v. Masimo
IPR2024-00242

C. THE '648 PATENT

The '648 patent discusses devices using spectroscopic analysis in patient monitoring. Ex. 1001, 2:14–19. These devices may have at least a light source that sends light into or off a measurement site, such as flesh with blood pulsing through it. *Id.* at 2:16–19. A photo-detection device detects attenuated light from the measurement site, generating a signal in response to the detected light. *Id.* at 2:19–22. The signal is processed by a signal processing device to produce data for monitoring a patient's condition. *Id.* at 2:25–28. For example, the signal processing device may indicate "a blood constituent of interest, such as glucose, oxygen, met hemoglobin, total hemoglobin, or other physiological parameters." *Id.*

An example system for measuring one or more blood analytes noninvasively appears in Figure 1. *Id.* at 5:41–44. Figure 1 is reproduced below.

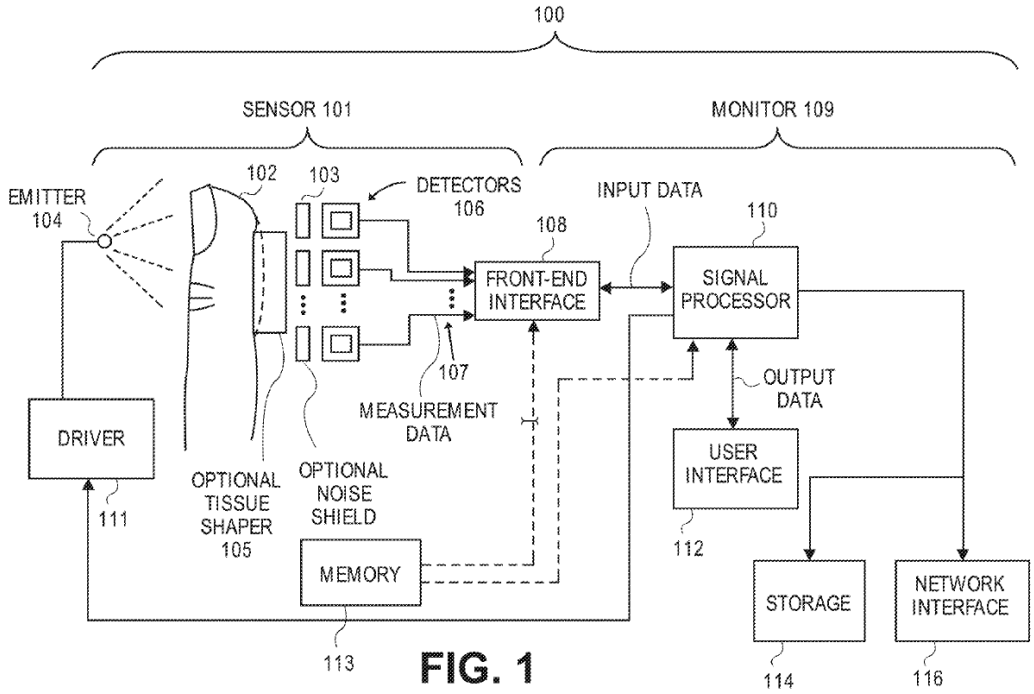

FIG. 1

MASIMO 2008
Apple v. Masimo
IPR2024-00242

Figure 1 shows data collection system 100, which includes sensor 101 and monitor 109. *Id.* at 11:51–53.

In the embodiment shown in Figure 1, sensor 101 "includes an emitter 104, a tissue shaper 105, a set of detectors 106, and a front-end interface 108." *Id.* at 11:63–65. Emitter 104 can send optical radiation to measurement site 102. *Id.* at 11:65–67. "[E]mitter 104 can include one or more sources of optical radiation, such as LEDs, laser diodes, incandescent bulbs with appropriate frequency-selective filters, combinations of the same, or the like." *Id.* at 12:1–4. Emitter 104 is driven by driver 111. *Id.* at 13:55–56. Monitor 109 may control driver 111, which can provide current pulses to emitter 104. *Id.* at 13:56–61.

Detectors 106 may capture and measure light generated by emitter 104 and attenuated or reflected from measurement site 102. *Id.* at 14:7–11. Responsive to the captured or measured light, detectors 106 can produce detector signal 107. *Id.* at 14:11–13. "[D]etectors 106 can be implemented using one or more photodiodes, phototransistors, or the like." *Id.* at 14:13–14.

The output of detectors 106 is adapted by front end interface 108. *Id.* at 14:31–33. "For example, the front end interface 108 can adapt a signal 107 received from one or more of the detectors 106 into a form that can be processed by the monitor 109." *Id.* at 14:33–36.

"[M]onitor 109 can include the signal processor 110 and a user interface, such as a display 112," as well as storage device 114, and network interface 116. *Id.* at 15:21–25. Signal processor 110 may have "processing logic that determines measurements for desired analytes, such as glucose, based on the signals received from the detectors 106." *Id.* at 15:25–29.

MASIMO 2008
Apple v. Masimo
IPR2024-00242

Signal processor 110 can control sensor 101's operation with signals, including an emitter control signal provided to driver 111 to control pulses from emitter 104. *Id.* at 15:34–39. "The user interface 112 can provide an output, e.g., on a display, for presentation to a user of the data collection system 100." *Id.* at 15:51–53. "The various software and/or firmware applications can be stored in the storage device 114, which can be executed by the signal processor 110 or another processor of the monitor 109." *Id.* at 16:2–5. Network interface 116 may enable monitor 109 to share data and communicate with other devices. *Id.* at 16:5–11.

"[M]ore detailed examples of embodiments of a sensor" appear in Figures 3A through 3C. *Id.* at 18:33–34. Figure 3A is reproduced below.

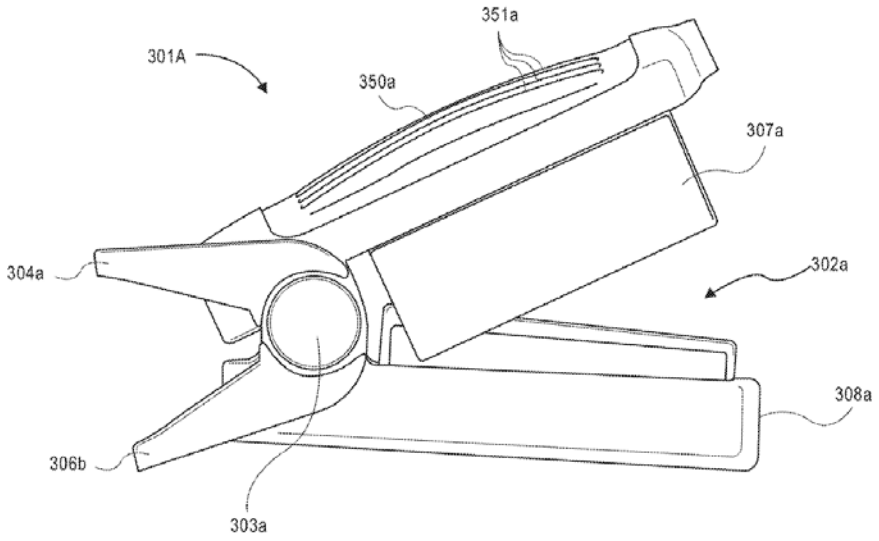

FIG. 3A

Figure 3A shows sensor 301a, which "is a clothespin-shaped clip sensor that includes an enclosure 302a for receiving a patient's finger. The enclosure 302a is formed by an upper section or emitter shell 304a, which is

MASIMO 2008
Apple v. Masimo
IPR2024-00242

pivotably connected with a lower section or detector shell 306a."[1] *Id.* at 18:37–42. Another view of sensor 301a appears in Figure 3C, which is reproduced below.

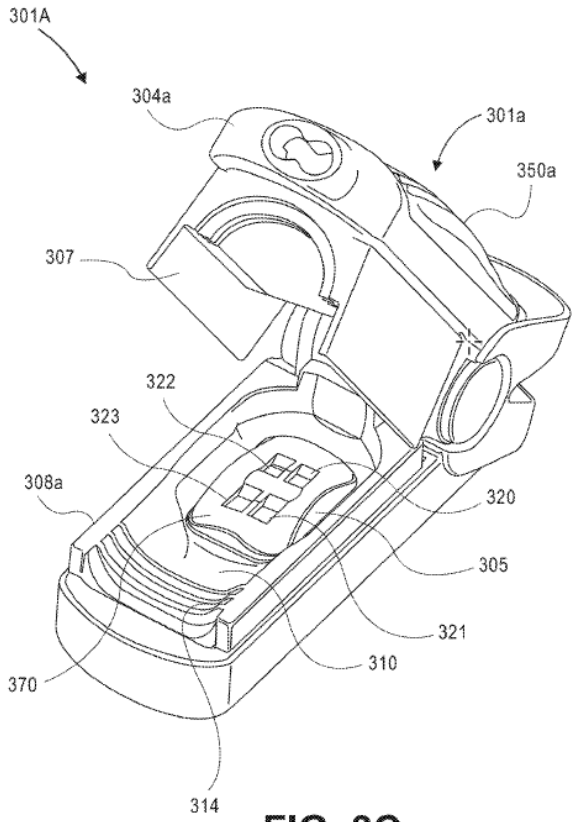

FIG. 3C

Figure 3C shows sensor 301a's finger bed 310. *Id.* at 19:7–8.

Finger bed 310 may have a generally curved surface suited for receiving flesh, e.g., a human digit. *Id.* at 19:8–10. Ridges 314 on finger bed 310 may help hold a patient's finger to finger bed 310, which can promote accurate spectroscopic analysis. *Id.* at 19:10–17.

Finger bed 310 can also comprise protrusion 305. *Id.* at 19:22–23. Protrusion 305 may be a convex bump. *Id.* at 21:18–19. Protrusion 305

[1] In this passage, it appears that "detector shell 306a" should read "detector shell 308a."

MASIMO 2008
Apple v. Masimo
IPR2024-00242

comprises measurement site contact area 370. *Id.* at 19:23–25. Contact area 370 has windows 320, 321, 322, and 323. *Id.* at 19:31–33. "[W]indows 320, 321, 322, and 323 can be made from materials, such as plastic or glass." *Id.* at 19:45–46.

In an embodiment, the location of windows 320, 321, 322, and 323 may mirror the location of photodetectors, allowing light from a measurement site to reach the photodetectors through windows 320, 321, 322, and 323. *Id.* at 19:33–41. Additionally, "[i]n an embodiment, the photodetectors can be positioned within or directly beneath the protrusion." *Id.* at 20:18–19. The '648 patent shows this in Figure 3E, which is reproduced below.

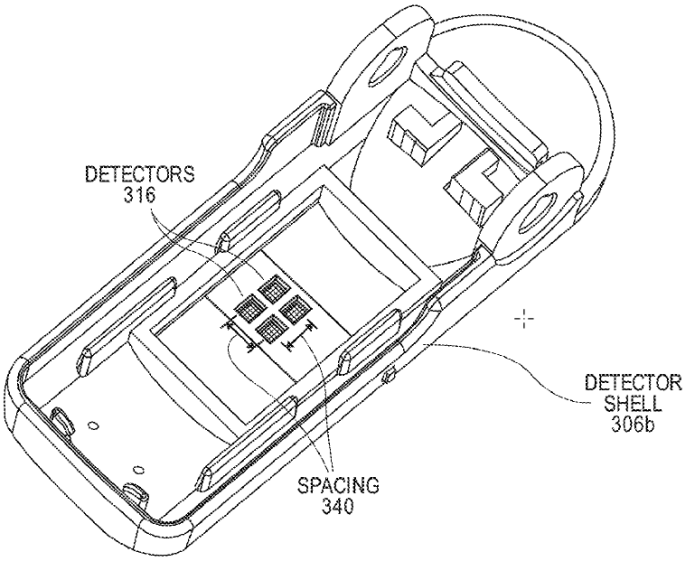

FIG. 3E

Figure 3E "illustrates a perspective view of an example noninvasive sensor detector shell including example detectors." *Id.* at 5:56–58.

MASIMO 2008
Apple v. Masimo
IPR2024-00242

Specifically, Figure 3E shows detectors 316. *Id.* at 22:28–32. "The detectors 316 can have a predetermined spacing 340 from each other, or a spatial relationship among one another that results in a spatial configuration." *Id.* at 22:33–35.

D. ILLUSTRATIVE CLAIM

Of the challenged claims, claims 1, 6, 8, and 20 are independent. Each of claims 2–5, 7, 9–19, and 21–30 depends, directly or indirectly, from one of independent claims 1, 6, 8, and 20. Claim 1 is illustrative and is reproduced below with certain reformatting:[2]

1. [1pre] A user-worn device configured to non-invasively determine measurements of physiological parameter of a user, the user-worn device comprising:

[1a] a plurality of light emitting diodes (LEDs);

[1b] four photodiodes configured to receive light emitted by the LEDs, the four photodiodes being arranged to capture light at different quadrants of tissue of a user;

[1c-1] a protrusion comprising a convex surface and

[1c-2] a plurality of openings extending through the protrusion, the openings arranged over the photodiodes and

[1c-3] configured to allow light to pass through the protrusion to the photodiodes; and

[1d] one or more processors configured to receive one or more signals from at least one of the photodiodes and determine measurements of oxygen saturation of the user.

Ex. 1001, 44:51–65.

E. EVIDENCE

Petitioner relies on the following evidence:

[2] We have added the same carriage returns and labels that Petitioner applies to different portions of claim 1. *See* Pet. vi.

MASIMO 2008
Apple v. Masimo
IPR2024-00242

(1) U.S. Patent No. 6,801,799 B2, issued Oct. 5, 2004 ("Mendelson-799") (Ex. 1006).

(2) U.S. Patent Application Publication No. 2002/0188210 A1, published Dec. 12, 2002 ("Aizawa") (Ex. 1007).

(3) U.S. Patent Application Publication No. 2001/0056243 A1, published Dec. 27, 2001 ("Ohsaki") (Ex. 1008).

(4) U.S. Patent Application Publication No. 2007/0093786, published Apr. 26, 2007 ("Goldsmith") (Ex. 1009).

(5) U.S. Patent Application Publication No. 2006/0211924, published Sep. 21, 2006 ("Dalke") (Ex. 1010).

(6) U.S. Patent No. 6,330,468 B1, issued Dec. 11, 2001 ("Scharf") (Ex. 1011).

(7) Published International Patent Application No. WO 2005/092182 A1, published Oct. 6, 2005 ("Kotanagi") (Ex. 1016).

(8) U.S. Patent No. 3,789,601, issued Feb. 5, 1974 ("Bergey") (Ex. 1021).

(9) U.S. Patent No. 5,952,084, issued Sep. 14, 1999 ("Anderson") (Ex. 1023).

(10) Declaration of Thomas W. Kenny, Ph.D. (Ex. 1003).

Patent Owner relies on the declaration of R. James Duckworth, Ph.D. (Ex. 2002).

MASIMO 2008
Apple v. Masimo
IPR2024-00242

F. Asserted Ground of Unpatentability

Petitioner challenges the patentability of claims 1–30 of the '648 patent on the following grounds (Pet. 6–7):

Claims Challenged	35 U.S.C. §	Reference(s)
1, 2, 4, 5	103	Mendelson-799, Aizawa, Ohsaki
3, 20, 21–30	103	Mendelson-799, Aizawa, Ohsaki, Scharf
6–16, 19	103	Mendelson-799, Aizawa, Ohsaki, Scharf, Dalke, Goldsmith
17	103	Mendelson-799, Aizawa, Ohsaki, Scharf, Dalke, Goldsmith, Bergey
18	103	Mendelson-799, Aizawa, Ohsaki, Scharf, Dalke, Goldsmith, Anderson
1, 2, 4, 5	103	Mendelson-799, Aizawa, Kotanagi
3, 20, 21–30	103	Mendelson-799, Aizawa, Kotanagi, Scharf
6–16, 19	103	Mendelson-799, Aizawa, Kotanagi, Scharf, Dalke, Goldsmith
17	103	Mendelson-799, Aizawa, Kotanagi, Scharf, Dalke, Goldsmith, Bergey
18	103	Mendelson-799, Aizawa, Kotanagi, Scharf, Dalke, Goldsmith, Anderson

II. ANALYSIS

A. Level of Ordinary Skill

Petitioner contends that

> [a] person of ordinary skill in the art relating to the subject matter of the '648 Patent as of July 3, 2008 ("POSITA") would have been a person with a working knowledge of physiological monitoring technologies. The person would have had a Bachelor of Science degree in an academic discipline emphasizing the design of electrical, computer, or software technologies, in

MASIMO 2008
Apple v. Masimo
IPR2024-00242

> combination with training or at least one to two years of related work experience with capture and processing of data or information, including but not limited to physiological monitoring technologies. APPLE-1003, ¶¶40-41. Alternatively, the person could have also had a Master of Science degree in a relevant academic discipline with less than a year of related work experience in the same discipline. *Id*.

Pet. 3–4. Patent Owner does not dispute Petitioner's description of a person of ordinary skill in the art. *See* Prelim. Resp. 10. For purposes of deciding whether Petitioner has demonstrated a reasonable likelihood of prevailing, we adopt Petitioner's definition of a person of ordinary skill in the art, which we find consistent with the '648 patent and the asserted prior art.

B. CLAIM CONSTRUCTION

In an *inter partes* review proceeding, a claim of a patent is construed using the same standard used in federal district court, including construing the claim in accordance with the ordinary and customary meaning of the claim as understood by one of ordinary skill in the art and the prosecution history pertaining to the patent. 37 C.F.R. § 42.100(b) (2020). According to the applicable standard, claim terms "are generally given their ordinary and customary meaning" as understood by a person of ordinary skill in the art in question at the time of the invention. *Phillips v. AWH Corp.*, 415 F.3d 1303, 1312–13 (Fed. Cir. 2005) (en banc) (citations omitted). Only those terms that are in controversy need be construed, and only to the extent necessary to resolve the controversy. *See Nidec Motor Corp. v. Zhongshan Broad Ocean Motor Co.*, 868 F.3d 1013, 1017 (Fed. Cir. 2017) (citing *Vivid Techs., Inc. v. America Sci. & Eng'g, Inc.*, 200 F.3d 795, 803 (Fed. Cir. 1999)).

Petitioner argues that "[n]o formal claim constructions are necessary in this proceeding." Pet. 3. Patent Owner contends we "should give the

MASIMO 2008
Apple v. Masimo
IPR2024-00242

claim terms their ordinary and customary meaning, consistent with the specification, as a [person of ordinary skill in the art] would understand them." Prelim. Resp. 10. We do not discern a need to construe any claim language expressly in order to determine whether Petitioner demonstrates a reasonable likelihood of prevailing.

C. ALLEGED OBVIOUSNESS OF CLAIMS 1, 2, 4, AND 5 OVER MENDELSON-799, AIZAWA, AND OHSAKI

1. *Overview of Mendelson-799*

Mendelson-799 is a U.S. patent titled "Pulse Oximeter and Method of Operation," and discloses a sensor for non-invasive measurement of a blood parameter, which includes a sensor housing, a radiation source, and a detector. Ex. 1006, codes (54), (57).

Figure 7 of Mendelson-799 is reproduced below.

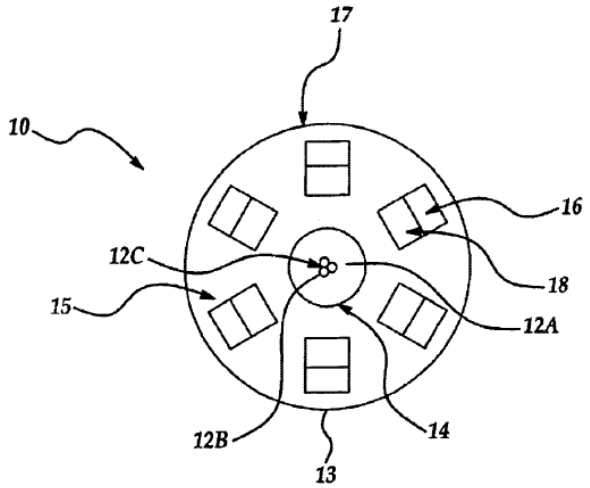

Figure 7

Figure 7 above illustrates optical sensor 10 with sensor housing 17 and light source 12, which includes three light emitting elements 12a, 12b, 12c. *Id.* at 9:22–28. Optical sensor 10 includes an array of discrete detectors, i.e., "far" detectors 16 and "near" detectors 18, "arranged in two concentric ring-like arrangements . . . surrounding the light emitting

MASIMO 2008
Apple v. Masimo
IPR2024-00242

elements." *Id.* at 9:29–34. Sensor housing 17 accommodates the light source and detectors. *Id.* at 9:34–35.

2. *Overview of Aizawa*

Aizawa is a U.S. patent application publication titled "Pulse Wave Sensor and Pulse Rate Detector," and discloses a pulse wave sensor that detects light output from a light emitting diode and reflected from a patient's artery. Ex. 1007, codes (54), (57).

Figure 1(a) of Aizawa is reproduced below.

FIG. 1 (a)

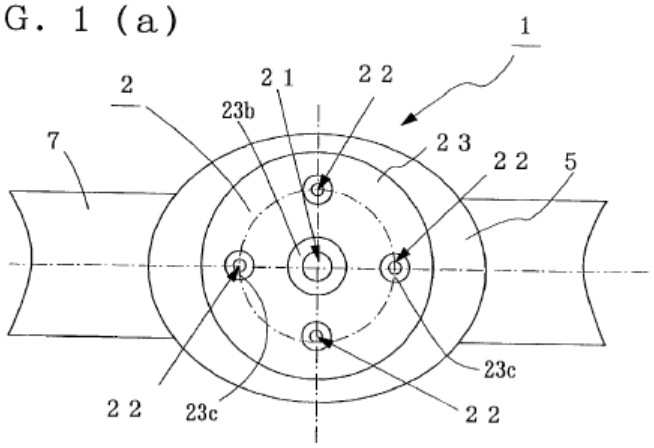

Figure 1(a) is a plan view of a pulse wave sensor. *Id.* ¶ 23. As shown in Figure 1(a), pulse wave sensor 2 includes light emitting diode ("LED") 21, four photodetectors 22 symmetrically disposed around LED 21, and holder 23 for storing LED 21 and photodetectors 22. *Id.* Aizawa discloses that, "to further improve detection efficiency, . . . the number of the photodetectors 22 may be increased." *Id.* ¶ 32, Fig. 4(a). "The same effect can be obtained when the number of photodetectors 22 is 1 and a plurality of light emitting diodes 21 are disposed around the photodetector 22." *Id.* ¶ 33.

MASIMO 2008
Apple v. Masimo
IPR2024-00242

Figure 1(b) of Aizawa is reproduced below.

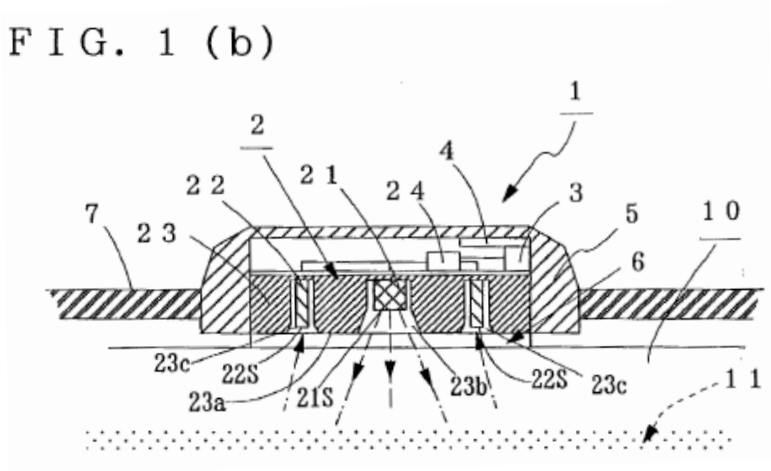

Figure 1(b) is a sectional view of the pulse wave sensor. *Id.* ¶ 23. As shown in Figure 1(b), pulse wave sensor 2 includes drive detection circuit 24 for detecting a pulse wave by amplifying the outputs of photodetectors 22. *Id.* ¶ 23. Arithmetic circuit 3 computes a pulse rate from the detected pulse wave and transmitter 4 transmits the pulse rate data to an "unshown display." *Id.* The pulse rate detector further includes outer casing 5 for storing pulse wave sensor 2, acrylic transparent plate 6 mounted to detection face 23a of holder 23, and attachment belt 7. *Id.* ¶ 23.

3. *Overview of Ohsaki*

Ohsaki is a U.S. patent application publication titled "Wristwatch-type Human Pulse Wave Sensor Attached on Back Side of User's Wrist," and discloses an optical sensor for detecting a pulse wave of a human body. Ex. 1008, code (54), ¶ 3.

MASIMO 2008
Apple v. Masimo
IPR2024-00242

Figure 1 of Ohsaki is reproduced below.

FIG. 1

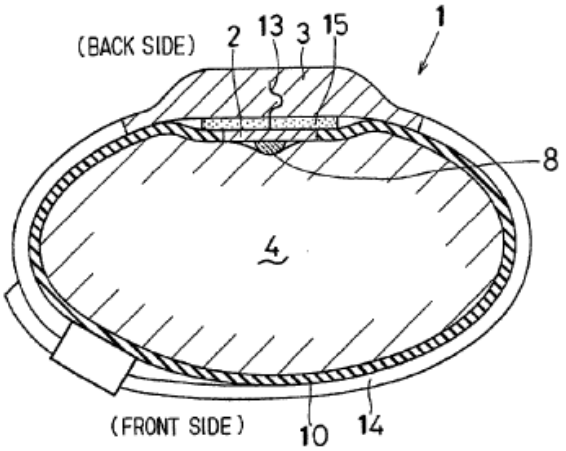

Figure 1 illustrates a cross-sectional view of pulse wave sensor 1 attached on the back side of user's wrist 4. *Id.* ¶¶ 12, 16. Pulse wave sensor 1 includes detecting element 2 and sensor body 3. *Id.* ¶ 16.

Figure 2 of Ohsaki, reproduced below, illustrates further detail of detecting element 2.

FIG. 2

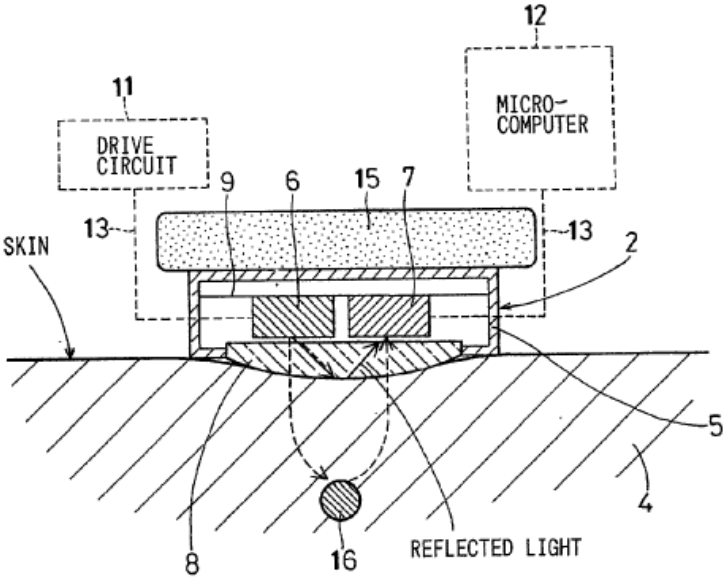

MASIMO 2008
Apple v. Masimo
IPR2024-00242

Figure 2 illustrates a mechanism for detecting a pulse wave. *Id.* ¶ 13. Detecting element 2 includes package 5, light emitting element 6, light receiving element 7, and translucent board 8. *Id.* ¶ 17. Light emitting element 6 and light receiving element 7 are arranged on circuit board 9 inside package 5. *Id.* ¶¶ 17, 19.

4. *Discussion*

A principal feature of independent claim 1 lies in the structure and arrangement of a "protrusion" located over four photodiodes arranged on a user-worn device. In this respect, claim 8 recites "a protrusion comprising a convex surface and a plurality of openings extending through the protrusion, the openings arranged over the photodiodes and configured to allow light to pass through the protrusion to the photodiodes." Ex. 1001, 44:58–62.

To arrive at the protrusion requirement in the claims, Petitioner presents a series of composite or modified figures that Petitioner contends would have emerged from the teachings of the prior art, specifically here, Mendelson-799, Aizawa, and Ohsaki. At the outset, we reproduce again Mendelson-799's unmodified Figure 7:

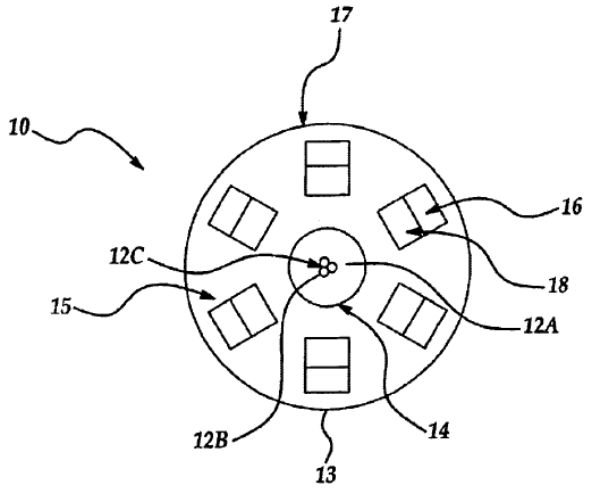

Figure 7

MASIMO 2008
Apple v. Masimo
IPR2024-00242

Figure 7 above illustrates Mendelson-799's optical sensor 10 with light sources 12a, 12b, and 12c and an "array of discrete detectors" (16 and 18) accommodated within sensor housing 17. Ex. 1006, 9:22–35. Although Mendelson-799 does not present a side view of the optical sensor illustrated in its Figure 7 (reproduced *supra*), Petitioner contends that Mendelson-799's Figure 7, when modified by the teachings of Aizawa to incorporate an opaque "holder," would appear as follows:

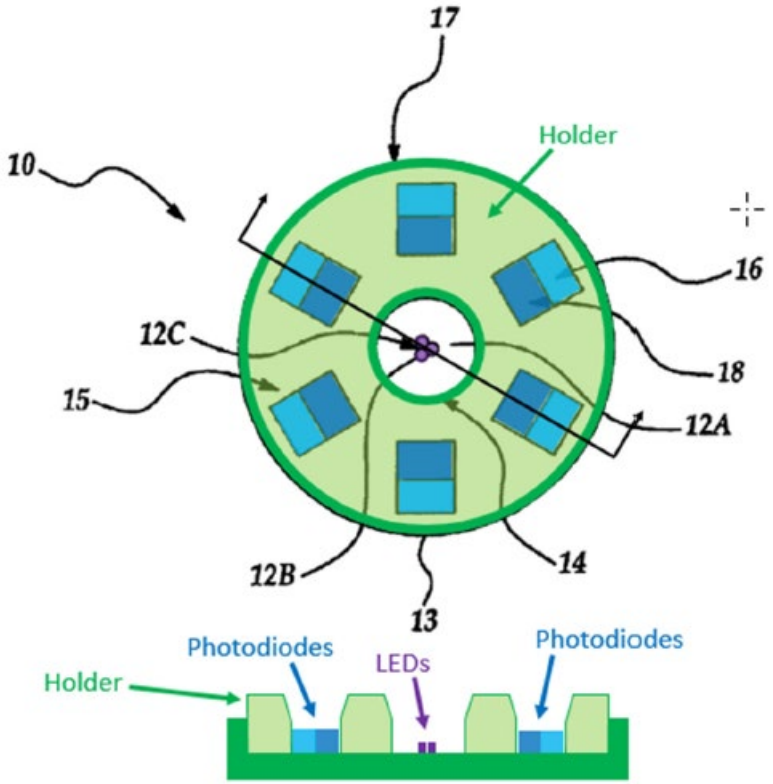

Pet. 19 (citing Ex. 1003 ¶ 54). In Petitioner's and Dr. Kenny's view, and as depicted in the modified figure above, the application of a holder from Aizawa onto Mendelson's optical sensor is asserted to result in multiple additional interior portions that extend in a manner so as to constitute a "protrusion" with multiple openings. *See, e.g.*, *id.* at 20. The basis of Petitioner's proposed ground of unpatentability, however, does not end

MASIMO 2008
Apple v. Masimo
IPR2024-00242

there. To account for the claim requirement pertaining to a convex surface, Petitioner proceeds to Ohsaki's teachings, and specifically its disclosure of translucent board 8 with convex surface, shown, for instance, in Ohsaki's Figure 2 (reproduce *supra*). Although, as Patent Owner notes, Ohsaki's board 8 is a singular structure that is translucent without openings (*see* Prelim. Resp. 38), Petitioner and Dr. Kenny are of the view that applying Ohsaki's teachings to Mendelson-799 and Aizawa, results in a further reconfiguration of the opaque holder said to arise from Mendeslon-799's and Aizawa's teachings as follows:

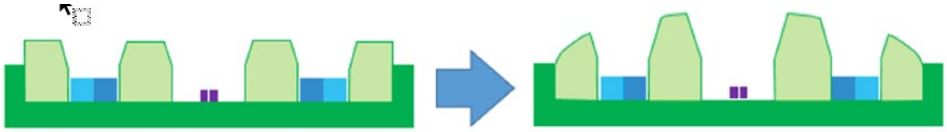

Id. at 24–25 (citing Ex. 1003 ¶ 62). Petitioner and Dr. Kenny generally contend that the above-reproduced figure on the right results from the combined teachings of Mendelson-799, Aizawa, and Ohsaki as a matter of simply being "use of a known technique to improve similar devices in the same way." *Id.* at 25 (citing Ex. 1003 ¶ 64).

Although it is certainly the case that an obviousness analysis may take into account the inferences and creative steps that a skilled artisan might glean from the teachings of the prior art (*see, e.g.*, *KSR Int'l Co. v. Teleflex Inc.*, 550 U.S. 398, 418 (2007)), one must be cognizant that "hindsight is not an available analytical mechanism to show obviousness." *See In re Omeprazole Patent Litig.*, 483 F.3d 1364, 1381 (Fed. Cir. 2007) (Newman, J., dissenting). Indeed, "we cannot allow hindsight bias to be the thread that stitches together prior art patches into something that is the claimed invention." *See Metalcraft of Mayville, Inc. v. The Toro Co.*, 848 F.3d 1358, 1367 (Fed. Cir. 2017). Without the guidance provided by the claims of the

MASIMO 2008
Apple v. Masimo
IPR2024-00242

'648 patent, it is difficult to conclude that Petitioner's postulation as to a particular structure that results from combining the teachings of Mendelson-799, Aizawa, and Ohsaki is based on an objective assessment of what those teachings would have conveyed to a skilled artisan. It is clear from the Petition, however, that such structural configuration is necessary as the basis for Petitioner's approach to arriving at the structural requirements of the claims.[3]

At the outset, we share Patent Owner's view, and that of its declarant, Dr. Duckworth (Ex. 2002), that none of the prior art on which Petitioner relies discloses a convex protrusion with multiple openings for multiple detectors. *See, e.g.*, Prelim. Resp 35; Ex. 2002 ¶ 76. The proposed amalgamation of prior art teachings includes, for instance, arranging a "holder" from Aizawa into a configuration that, for ill explained reasons, forms protruded portions of that holder containing multiple openings associated with photodetectors of Mendelson-799's optical sensor in an attempt to satisfy the structural requirements of the claim. *See, e.g.*, Pet. 19–20. In our view, however, Petitioner simply does not explain adequately why such configuration with respect to Mendelson-799's optical sensor results from the actual teachings of the prior art.

Further still, in an effort to next account for a convex shape of the protrusions and openings, Petitioner must rely on Ohsaki's convex translucent board under the premise that Ohsaki's board shape would

[3] Although Petitioner, in a footnote, generally contends that "other examples" of composite figure configurations "could be conceived" so as to render the challenged claims obvious, Petitioner does not provide further assessment or explanation in that regard. *See* Pet. 19 n.4. We find that general contention unavailing.

MASIMO 2008
Apple v. Masimo
IPR2024-00242

"improve adhesion" or provide "improved user comfort" for the detector formed from a combination of Mendelson-799 and Aizawa. *See, e.g.* Pet. 21–26. Yet, consistent with the arguments advanced by Patent Owner and Dr. Duckworth, we are not satisfied that Petitioner adequately explains why a skilled artisan would have expected that such benefits would apply to the convoluted combination of modifications Petitioner proposes to arrive at the claimed invention. *See, e.g.*, Prelim. Resp. 28–33, 59–61, 67–69; Ex. 2002 ¶¶ 109–111, 122–126. Nor has Petitioner explained adequately why a skilled artisan would have assessed that Petitioner's reasoning applies to a protrusion configured to have specific characteristics, e.g., multiple distinct openings, that are unaffiliated with adhesion or comfort. *See, e.g.*, Prelim. Resp. 28–33, 59–61, 67–69; Ex. 2002 ¶¶ 109–111, 122–126.

On the record before us here, we find questionable Petitioner's and Dr. Kenny's assessment and reasoning as to what a skilled artisan would have understood from the teachings of Mendelson-799, Aizawa, and Ohsaki as proposed by Petitioner here. We find persuasive Patent Owner's arguments that Petitioner's and Dr. Kenny's assessments are grounded in hindsight rather than based on due consideration of the teachings of the pertinent prior art. *See, e.g.*, Prelim. Resp. 30–34. Dr. Duckworth's testimony that one of ordinary skill in the art would not have combined the teachings of the prior art in the manner advocated by Petitioner further supports Patent Owner's arguments. *See, e.g.*, Ex. 2002 ¶¶ 109–111, 122–126.

MASIMO 2008
Apple v. Masimo
IPR2024-00242

D. ALLEGED OBVIOUSNESS OF CLAIMS 3, 20 AND 21–30 OVER MENDELSON-799, AIZAWA, OHSAKI, AND SCHARF

1. *Overview of Scharf*

Scharf is titled "System Using Green Light to Determine Parameters of a Cardiovascular System." Ex. 1011, code (54). Scharf describes a reflectance oximeter that uses two green light sources to detect oxygen saturation of hemoglobin in a volume of intravascular blood. *Id.* at 2:39–42.

Scharf's Figure 3 is reproduced below:

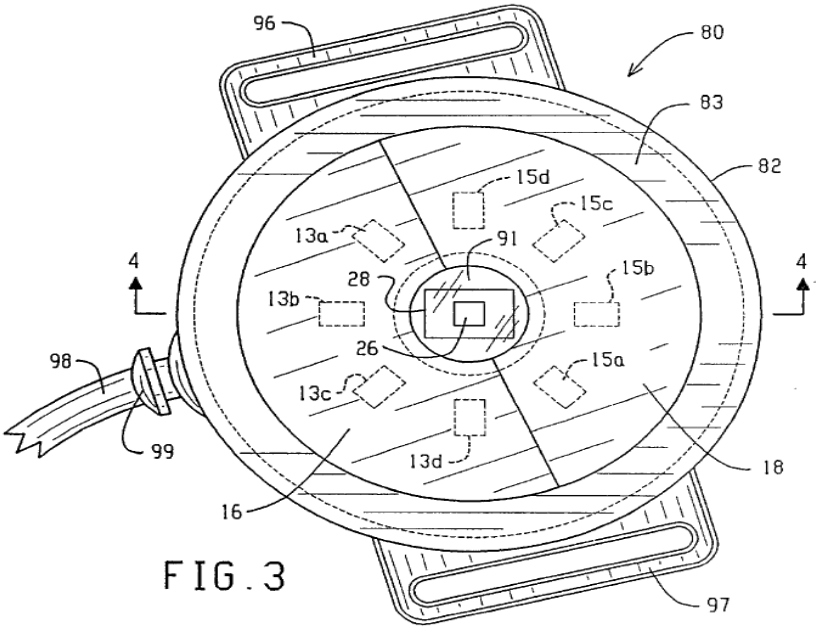

FIG. 3

Figure 3 above shows a bottom plan view of an oximeter probe according to an embodiment. *Id.* at 3:40–41. The oximeter probe may include green lights formed of light emitting diodes (LEDs) 13, 15. *Id.* at 4:18–20. Scharf explains that, depending on the particular type of green light sources, green optical filters 16, 18 may be needed. *Id.* at 4:30–34.

MASIMO 2008
Apple v. Masimo
IPR2024-00242

2. *Discussion*

In this challenge, the Petition cites Mendelson-799, Aizawa, and Ohsaki to address limitations of claims 3, 20, and 21–30 that are similar to limitations in claims 1, 2, 4, and 5. In many instances, Petitioner's arguments regarding the limitations of claims 3, 20, and 21–30 cite its arguments regarding similar limitations of claims 1, 2, 4, and 5. *See, e.g.*, Pet. 40–41 (for multiple limitations of independent claim 20, citing Petition's challenge of claim 1 based on Mendelson-799, Aizawa, and Ohsaki).

Petitioner cites Scharf when addressing certain limitations related to windows over photodiodes. *E.g.*, Pet. 42–44. Petitioner alleges that adding Scharf's teachings to those of Mendelson-799, Aizawa, and Ohsaki produces the configuration in the following illustration:

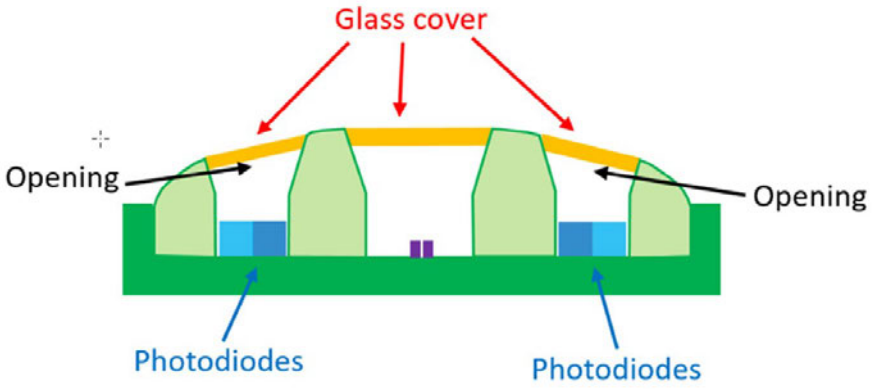

Pet. 39–40 (citing Ex. 1003 ¶¶ 91–92). The reasoning for that further modified figure based on Scharf's teachings is premised on a desire to protect electronic components "from contaminants like dirt and moisture." *Id.* at 40.

MASIMO 2008
Apple v. Masimo
IPR2024-00242

Petitioner's arguments about Scharf do not cure the deficiencies discussed above in Section II.C.4 in the combination of Mendelson-799, Aizawa, and Ohsaki.

Additionally, we find unpersuasive Petitioner's arguments about the modifications that a person of ordinary skill in the art allegedly would have made based on Scharf. We share Patent Owner's skepticism that the teachings of the prior art, and specifically Scharf, justifies Petitioner's theory that separate windows would be placed over different openings within a convex protrusion so as to provide a general benefit of protecting electronics "from contaminants like dirt and moisture." *See, e.g.*, Pet. 40. Although Petitioner expresses that a "glass cover" generally may provide such protections, Petitioner does not explain adequately why, even if true, that the teachings on which Petitioner relies give rise to the particular window configuration required by the claims. *See id.* We also find credible Dr. Duckworth's testimony that Scharf's teachings applied to a combination of Mendelson, Aizawa, and Ohsaki do not convey reasonably to a skilled artisan the positioning of windows over the openings of a convex protrusion in the manner urged by Petitioner. *See, e.g.*, Ex. 2002 ¶¶ 90–93.

We do not find that Petitioner has demonstrated a reasonable likelihood of prevailing on its challenge of any of claims 3, 20, and 21–30 as allegedly obvious over Mendelson-799, Aizawa, Ohsaki, and Scharf.

E. Alleged Obviousness of Claims 6–16 and 19 over Mendelson-799, Aizawa, Ohsaki, Scharf, Dalke, and Goldsmith

1. *Overview of Dalke*

Dalke notes that "[s]pectroscopy is a common technique for measuring the concentration of organic and some inorganic constituents of a

MASIMO 2008
Apple v. Masimo
IPR2024-00242

solution." Ex. 1010 ¶ 4. Dalke elaborates that "[a] practical application of this technique is pulse oximetry, which utilizes a noninvasive sensor to measure oxygen saturation (SpO_2) and pulse rate." *Id.* ¶ 5.

Dalke discloses a physiological sensor with light emitting sources that can transmit light with multiple wavelengths. *Id.* at code (57). After body tissue attenuates the emitted light, a detector responds to the light. *Id.* In pulse oximetry, the sensor generally "has light emitting diodes (LEDs) that transmit optical radiation or red and infrared wavelengths into a tissue site" and a detector "responds to the intensity of the optical radiation after absorption (e.g., by transmission or transreflectance) by pulsatile arterial blood flowing within the tissue site." *Id.* ¶ 5. Dalke discusses a particular example of a sensor in connection with Figure 3. Figure 3 is reproduced below.

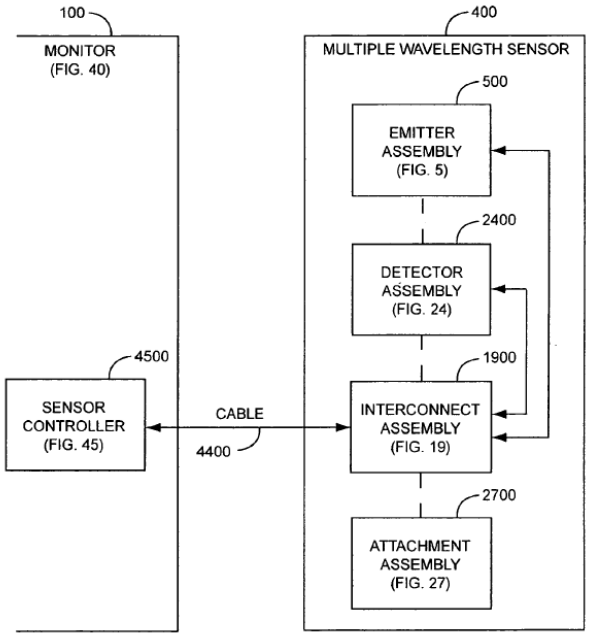

FIG. 3

MASIMO 2008
Apple v. Masimo
IPR2024-00242

Figure 3 "is a general block diagram of a multiple wavelength sensor and sensor control." *Id.* ¶ 12.

Figure 3 shows sensor assembly 400, which includes "an emitter assembly 500, a detector assembly 2400, an interconnect assembly 1900 and an attachment assembly 2400." *Id.* ¶ 58. In response to drive signals received from monitor 100's sensor controller 4500, emitter assembly 500 sends optical radiation with multiple wavelengths into a tissue site. *Id.* "The detector assembly 2400 provides a sensor signal to the monitor 100 via the cable 4400 in response to optical radiation received after attenuation by the tissue site." *Id.* Dalke discusses emitter array 500 further in connection with Figure 5. Figure 5 is reproduced below.

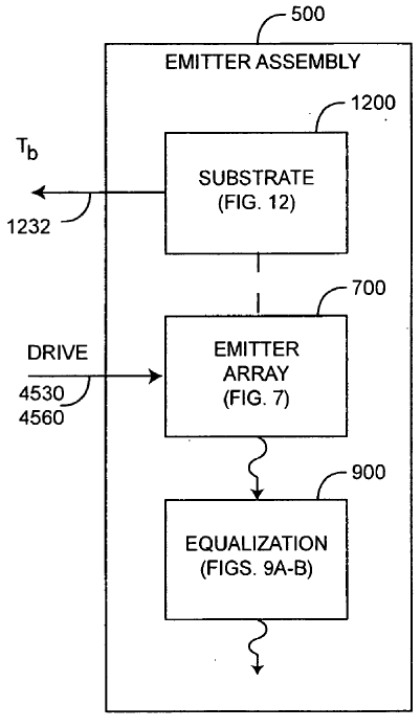

Figure 5 shows "an emitter assembly 500 having an emitter array 700, a substrate 1200, and equalization 900." *Id.* ¶ 61.

Emitter array 700 includes multiple light emitting sources that can transmit multiple wavelengths of optical radiation. *Id.* "LEDs within the

MASIMO 2008
Apple v. Masimo
IPR2024-00242

emitter array 700 may be grouped according to output intensity or wavelength or both." *Id.* ¶ 75.

Dalke also discloses "one embodiment of a substrate 1200 configured to provide thermal conductivity between an emitter array 700 . . . and a thermistor 1540." *Id.* ¶ 81. Dalke discusses this in connection with Figures 13–18. *Id.* Figures 15 and 16 are reproduced below.

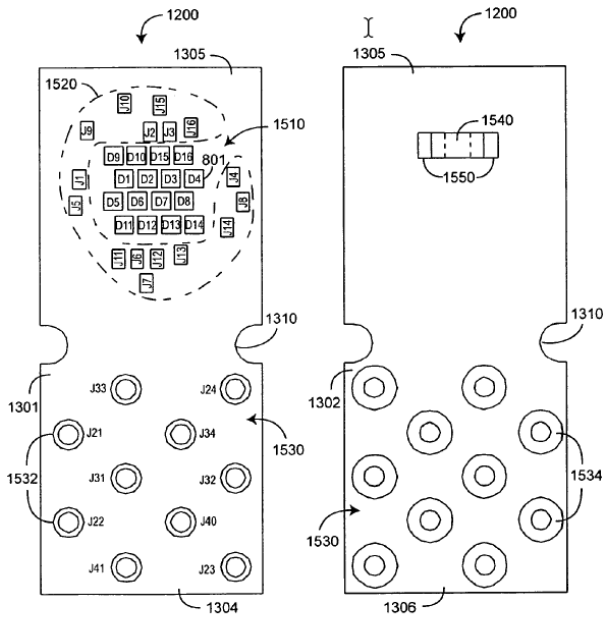

FIG. 15 FIG. 16

Figures 15 and 16 "are top and bottom component layout views of an emitter substrate embodiment." *Id.* ¶ 23. Measuring the resistance of thermistor 1540 allows determining the bulk temperature of LEDs mounted on substrate 1200. *Id.* ¶ 81.

2. *Overview of Goldsmith*

Goldsmith discloses "[a]n infusion system that includes a watch controller device and a communication system to transmit the communications from the watch controller device to an infusion device pump that controls delivery of fluids to the user's body." Ex. 1009, code

MASIMO 2008
Apple v. Masimo
IPR2024-00242

(57). Specifically, Goldsmith discloses using these devices for ascertaining how much insulin to supply. *Id.* Goldsmith discusses one embodiment in connection with Figure 9A. Figure 9A is reproduced below.

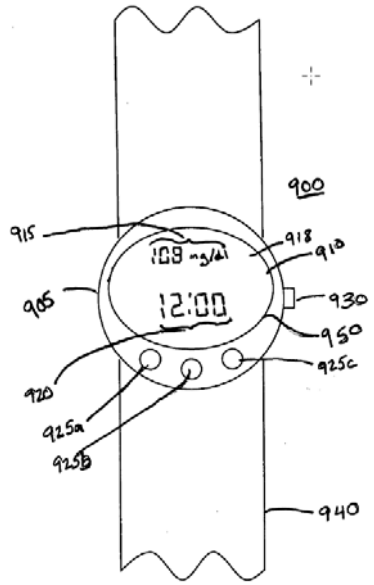

FIG. 9A

Figure 9A "is a front view of a combined watch and controller device according to an embodiment." *Id.* ¶ 30.

Specifically, Figure 9A shows combined watch and controller device 900, which includes housing 905 and wrist band 940. *Id.* ¶ 85. "The housing 905 may include a transparent member 950 on the front side over a display 910." *Id.* Additionally, "[t]he watch controller device may include one or more input devices 925a, 925b, 925c, 930 on the controller device housing, such as keys, buttons or the like, for the user to input data or commands." *Id.* Display 910 may show the time, as well as "whatever information and/or graph is being displayed on the infusion device display or the analyte monitor display." *Id.* ¶ 86. For example, the display may indicate glucose levels. *Id.*

MASIMO 2008
Apple v. Masimo
IPR2024-00242

3. *Discussion*

In this challenge, the Petition cites Mendelson-799, Aizawa, and Ohsaki to address limitations of claims 6–16 and 19 that are similar to limitations in claims 1, 2, 4, and 5. In many instances, Petitioner's arguments regarding the limitations of claims 6–16 and 19 cite its arguments regarding similar limitations of claims 1, 2, 4, and 5. *See, e.g.*, Pet. 63, 68 (for multiple limitations of independent claim 6, citing Petition's challenge of claim 1 based on Mendelson-799, Aizawa, and Ohsaki).

Petitioner cites Dalke as disclosing "[i]n addition to photodiodes, . . . a thermistor." *Id.* at 52–53. Petitioner also cites Dalke as "expressly recogniz[ing] that '***any number of LED groups***' may be used." Pet. 58 (citing Ex. 1010 ¶ 75). Accordingly, Petitioner argues, "simply doubling the LED cluster provided in Mendelson-799 . . . would have been obvious to a [person of ordinary skill in the art]." *Id.*

Petitioner relies on Goldsmith as disclosing "a touchscreen display." Pet. 53. Petitioner cites Goldsmith's "touch screen display," for example, when addressing claim 10's recitation of "a user interface including a touch-screen display configured to display indicia responsive to the measurements of the physiological parameter." Pet. 73.

Petitioner's arguments about Dalke and Goldsmith do not cure the deficiencies, discussed above in Section II.C.4, in its claim challenges based on Mendelson-799, Aizawa, and Ohsaki. We do not find that Petitioner has demonstrated a reasonable likelihood of prevailing on its challenge of any of claims 6–16 and 19 as allegedly obvious over Mendelson-799, Aizawa, Ohsaki, Dalke, and Goldsmith.

MASIMO 2008
Apple v. Masimo
IPR2024-00242

F. ALLEGED OBVIOUSNESS OF CLAIM 17 OVER MENDELSON-799, AIZAWA, OHSAKI, SCHARF, DALKE, GOLDSMITH, AND BERGEY

1. *Overview of Bergey*

Bergey discloses "a solid state electronic wristwatch with no moving parts." Ex. 1021, code [57]. Bergey discusses an embodiment in connection with Figure 1. Figure 1 is reproduced below.

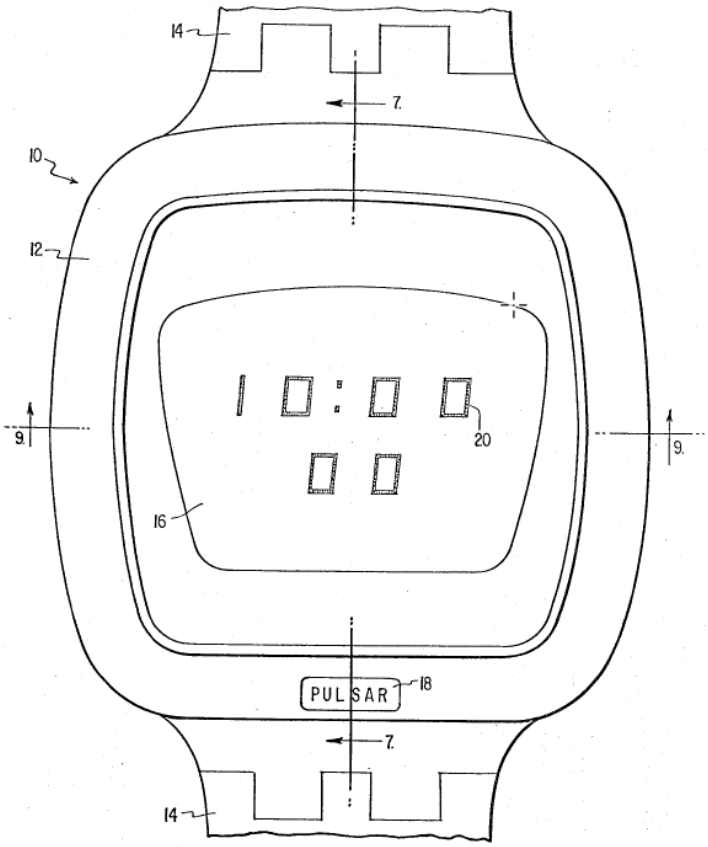

FIG. 1

Figure 1 shows watch 10, which includes watch case 12 attached to wristwatch bracelet 14. *Id.* at 3:57–62. Bergey provides additional details regarding the construction of watch 10 in Figure 9. Figure 9 is reproduced below.

MASIMO 2008
Apple v. Masimo
IPR2024-00242

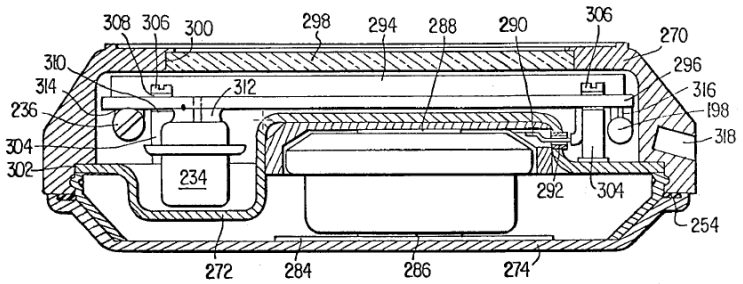

FIG. 9

Figure 9 "is a cross section . . . taken along line 9-9 of [Figure] 1." *Id.* at 3:46–47.

"The watch case 12 comprises a front plate 270, an inner cover 272, and a removable back plate 274." *Id.* at 8:32–34. Bergey explains that "the electronics 294 is hermetically sealed all the way around between inner cover 272 and front plate 270. This hermetic seal acts as protection to the electronics and also prevents condensation of water vapor on the filter 298." *Id.* at 9:22–26.

2. *Discussion*

Claim 17 depends from independent claim 8 and recites "wherein the housing hermetically seals at least a portion of an interior of the user-worn device." Ex. 1001, 46:26–28. Addressing this, Petitioner argues that Bergey discloses a hermetically sealed watch. Pet. 85. Petitioner contends that

> a [person of ordinary skill in the art] would have been motivated to look to prior art such as Bergey, for example, to obtain the advantages described by Bergey (e.g., to hermetically seal the components to produce a waterproof, shockproof device) by modifying the Mendelson-799-Aizawa-Ohsaki-Scharf-Dalke-Goldsmith device such that the sensor housing hermetically seals at least a portion of an interior of the user-worn device, as taught by Bergey, to protect the electronics and prevent "condensation of water vapor" inside of the case.

Id. at 86.

MASIMO 2008
Apple v. Masimo
IPR2024-00242

Petitioner's arguments regarding Bergey do not cure the deficiencies, discussed above in Sections II.C.4 and II.E.3, in Petitioner's challenge of independent claim 8 as allegedly obvious over Mendelson-799, Aizawa, Ohsaki, Dalke, and Goldsmith. We do not find Petitioner has demonstrated a reasonable likelihood of establishing obviousness of claim 17 over Mendelson-799, Aizawa, Ohsaki, Dalke, Goldsmith, and Bergey.

G. ALLEGED OBVIOUSNESS OF CLAIM 18 OVER MENDELSON-799, AIZAWA, OHSAKI, SCHARF, DALKE, GOLDSMITH, AND ANDERSON

1. *Overview of Anderson*

Anderson relates to "transparent substrates, in particular glass substrates, which are provided with coatings composed of one or more thin films . . . designed to give specific properties to the substrates which bear them, for example, thermal, optical, or electrical properties." Ex. 1023, 1:5–10. Anderson explains that an "anti-reflection coating" works to decrease a substrate's light reflection factor, thereby "increasing its light transmission factor." *Id.* at 1:22–28. This increases the visibility of objects behind the substrate. *Id.* at 1:28–30. An anti-reflection coating may be a stack of certain materials. *Id.* at 5:1–6. Additionally, including a conductive material film in the stack can provide an anti-static function. *Id.* at 5:32–38.

2. *Discussion*

Claim 18 recites "[t]he user-worn device of claim 8, wherein the windows comprise a conductive material." Ex. 1001, 46:29–30. Addressing this, Petitioner alleges that Anderson discloses a coating with "'a film of a conductive material' in its coating, in particular, 'a material of the doped metal oxide type, such as tin-doped indium oxide ITO." Pet. 88. Based on this and arguments that it would have been obvious to add Anderson's

MASIMO 2008
Apple v. Masimo
IPR2024-00242

disclosures to those of Mendelson-799, Aizawa, Ohsaki, Scharf, Dalke, and Goldsmith, Petitioner argues that "[i]n the combination, ***the windows include*** an anti-reflection coating containing a '**conductive material**,' such as '**a material of the doped metal oxide type, such as tin-doped indium oxide ITO**,' as taught by Anderson, on at least one surface." *Id.* at 91. Petitioner's arguments and evidence regarding Anderson do not cure the deficiencies, discussed above in Section II.C.4, in Petitioner's assertions that independent claim 8 would have been obvious over Lumidigm, Scharf, and Kotanagi. Petitioner has not demonstrated a reasonable likelihood of establishing that claim 18 would have been obvious over Mendelson-799, Aizawa, Ohsaki, Scharf, Dalke, and Goldsmith. We do not find Petitioner has demonstrated a reasonable likelihood of establishing obviousness of claim 18 over Mendelson-799, Aizawa, Ohsaki, Scharf, Dalke, Goldsmith, and Anderson.

H. GROUNDS BASED ON MENDELSON-799, AIZAWA, AND KOTANAGI

Petitioner also contends that all of the challenged claims are rendered obvious based largely on the combined teachings of Mendelson-799, Aizawa, and Kotanagi. Patent Owner does not agree.

1. *Overview of Kotanagi*

Kotanagi is titled "Biological Information Measuring Device." Ex. 1016, code (54). Kotanagi describes that a biological information measuring device can include a biological sensor including a body and a protrusion formed on the lower surface of the body. *Id.* at code (57). Kotanagi explains that the protrusion can be formed with a "curved surface." *Id.* at ¶ 80.

MASIMO 2008
Apple v. Masimo
IPR2024-00242

2. *Discussion*

Petitioner proposes that all of the challenged claims are unpatentable based, in whole or in part, on the combined teachings of Mendelson-799, Aizawa, and Kotanagi. Kotanagi's teachings are advanced by Petitioner as being analogous to, or alternative of, those of Ohsaki. *See, e.g.*, Pet. 93–96. In particular, Petitioner specifies that it applies Kotanagi's teachings for "the same reasons" as was proposed for the grounds including Ohsaki and that Kotanagi provides "additional/alternative motivations" to apply a convex protrusion in conjunction with the combined teachings of Mendelson-799 and Aizawa. *See, e.g.*, *id.* at 95.

In our view, Petitioner's proposed grounds of unpatentability for the challenged claims fare no better based on Kotanagi's teachings than they did for those grounds based on Ohsaki's teachings. For the same reasons discussed above, we conclude that Petitioner has not shown a reasonable likelihood of success in connection with any of its proposed grounds that involve the combined teachings of Mendelson-799, Aizawa, and Kotanagi.[4]

III. CONCLUSION

Because we determine that the information presented in the record does not establish there is a reasonable likelihood that Petitioner would prevail with respect to at least one challenged claim of the patent '648 patent, we do not institute an *inter partes* review.

IV. ORDER

For the reasons given, it is:

---

[4] Here, too, Petitioner's citations to Scharf, Dalke, Goldsmith, Bergey, and Anderson do not overcome the deficiencies identified with respect to the combination of Mendelson-799, Aizawa, and Kotanagi.

MASIMO 2008
Apple v. Masimo
IPR2024-00242

ORDERED that the Petition is *denied* as to all challenged claims of the '648 patent and no trial is instituted.

For PETITIONER:
W. Karl Renner
Andrew Patrick
Daniel D. Smith
Hyun Jin In
Grace Kim
Gretchen DeVries
Fish & Richardson P.C.
IPR50095-0042IP1@fr.com
PTABInbound@fr.com
axf-ptab@fr.com
patrick@fr.com
in@fr.com
gkim@fr.com
dsmith@fr.com
devries@fr.com

For PATENT OWNER:

Stephen W. Larson
Jarom D. Kesler
Irfan A. Lateef
Brian C. Claassen
Jacob L. Peterson
Knobbe, Martens, Olson, & Bear, LLP
2swl@knobbe.com
2jzk@knobbe.com
2ial@knobbe.com
2bcc@knobbe.com
2jup@knobbe.com

MASIMO 2008
Apple v. Masimo
IPR2024-00242