**IN THE UNITED STATES PATENT AND TRADEMARK OFFICE**

| | | |
|---|---|---|
| In re Patent of: | Ammar Al-Ali | |
| U.S. Patent No.: | 10,687,745 | Attorney Docket No.: 50095-0045IP2 |
| Issue Date: | June 23, 2020 | |
| Appl. Serial No.: | 16/835,772 | |
| Filing Date: | March 31, 2020 | |
| Title: | PHYSIOLOGICAL MONITORING DEVICES, SYSTEMS, AND METHODS | |

**Mail Stop Patent Board**
Patent Trial and Appeal Board
U.S. Patent and Trademark Office
P.O. Box 1450
Alexandria, VA 22313-1450

# PETITION FOR *INTER PARTES* REVIEW OF UNITED STATES PATENT NO. 10,687,745 PURSUANT TO 35 U.S.C. §§ 311–319, 37 C.F.R. § 42

# TABLE OF CONTENTS

I. REQUIREMENTS FOR IPR UNDER 37 C.F.R. § 42.104 ..... 1
A. Standing ..... 1
B. Challenge and Relief Requested ..... 1

II. SUMMARY OF THE '745 PATENT ..... 3
A. Brief Description ..... 3
B. Summary of the Prosecution History ..... 3
C. Level of Ordinary Skill in the Art ..... 5

III. CLAIM CONSTRUCTION UNDER 37 C.F.R. §§ 42.104(b)(3) ..... 6

IV. THE CHALLENGED CLAIMS ARE UNPATENTABLE ..... 6
A. Ground 1A: Claims 1, 9, 15, and 18 are obvious over Ackermans in view of Savant ..... 6
1. Overview of Ackermans ..... 6
2. Overview of Savant ..... 9
3. The combination of Ackermans and Savant ..... 10
4. Reasons to combine Ackermans and Savant ..... 10
5. Analysis ..... 12
B. Ground 1B: Claims 20 and 27 are obvious over Ackermans and Savant in view of Venkatraman ..... 31
1. Overview of Venkatraman ..... 31
2. The combination of Ackermans, Savant, and Venkatraman ..... 32
3. Reasons to combine Ackermans, Savant, and Venkatraman ..... 33
4. Analysis ..... 35
C. Ground 2A: Claims 1, 9, 15, 18, 20, and 27 are obvious over Mendelson-799 in view of Haar, Venkatraman, and Savant ..... 37
1. Overview of Mendelson-799 ..... 37
2. Overview of Haar ..... 41
3. The combination of Mendelson-799, Haar, Venkatraman, and Savant ..... 42
4. Reasons to combine Mendelson-799, Haar, Venkatraman, and Savant ..... 43
5. Analysis ..... 51

V. PTAB DISCRETION SHOULD NOT PRECLUDE INSTITUTION ..... 74
A. 314(a) – *Fintiv* ..... 75
B. 325(d) – Advanced Bionics ..... 76

VI. MANDATORY NOTICES UNDER 37 C.F.R. §42.8 ..... 79



**MASIMO 2033**
**Apple v. Masimo**
**IPR2024-00242**

A. Real Parties-In-Interest Under 37 C.F.R. §42.8(b)(1) .....79
B. Related Matters Under 37 C.F.R. §42.8(b)(2) .....79
C. Lead And Back-Up Counsel Under 37 C.F.R. §42.8(b)(3) .....80
D. Service Information .....80

VII. PAYMENT OF FEES – 37 C.F.R. §42.103 .....81

VIII. CONCLUSION.....81



**MASIMO 2033**
**Apple v. Masimo**
**IPR2024-00242**

## EXHIBITS

| | |
|---|---|
| APPLE-1001 | U.S. Pat. No. 10,687,745 to Al-Ali ("the '745 patent") |
| APPLE-1002 | Prosecution History of the '745 patent (Serial No. 16/835,772) |
| APPLE-1003 | Declaration of Dr. Brian Anthony |
| APPLE-1004 | U.S. Pat. No. 8,670,819 ("Iwamiya") |
| APPLE-1005 | U.S. Pat. No. 9,392,946 ("Sarantos") |
| APPLE-1006 | U.S. Pub. No. 2014/0275854 ("Venkataraman") |
| APPLE-1007 | U.S. Pat. No. 6,483,976 ("Shie") |
| APPLE-1008 | U.S. Pat. No. 6,801,799 ("Mendelson-799") |
| APPLE-1009 | U.S. Pub. No. 2015/0018647 ("Mandel") |
| APPLE-1010 | U.S. Pub. No. 2009/0275810 ("Ayers") |
| APPLE-1011 | PCT. Pub. No. 2011/051888 ("Ackermans") |
| APPLE-1012 | U.S. Pat. No. 6,158,245 ("Savant") |
| APPLE-1013 | Design of Pulse Oximeters, J.G. Webster; Institution of Physics Publishing, 1997 ("Webster") |
| APPLE-1014 | U.S. Pub. No. 2009/0054112 ("Cybart") |
| APPLE-1015 | U.S. Pat. No. 5,893,364 ("Haar") |
| APPLE-1016 | U.S. Pat. No. 5,952,084 ("Anderson") |



**MASIMO 2033**
**Apple v. Masimo**
**IPR2024-00242**

APPLE-1017 U.S. Pat. No. 10,470,695 (the "'695 patent")

APPLE-1018 *Apple v. Masimo*, Case No. IPR2020-01722, Paper 29 (Final Written Decision) (PTAB May 5, 2022) (the "'695 FWD")

APPLE-1019 – APPLE-1030 RESERVED

APPLE-1031 *Masimo Corporation, et al. v. Apple Inc*., Redacted Complaint, ITC Inv. No. 337-TA-1276

APPLE-1032 *Interim Procedure for Discretionary Denials in AIA Post-Grant Proceedings with Parallel District Court Litigation*, issued June 21, 2022 ("Interim Guidance")



**MASIMO 2033**
**Apple v. Masimo**
**IPR2024-00242**

Apple Inc. ("Petitioner" or "Apple") petitions for *Inter Partes* Review ("IPR") of claims 1, 9, 15, 18, 20, and 27 ("the Challenged Claims") of U.S. Patent 10,687,745 ("the '745 patent"). Compelling evidence presented in this Petition demonstrates at least a reasonable likelihood that Apple will prevail with respect to at least one of the Challenged Claims. Accordingly, Apple respectfully requests institution of IPR and cancellation of all Challenged Claims as unpatentable.

## I. REQUIREMENTS FOR IPR UNDER 37 C.F.R. § 42.104

### A. Standing

Apple certifies that the '745 patent is available for IPR. Apple is not barred or estopped from requesting this review challenging the Challenged Claims on the below-identified grounds.

### B. Challenge and Relief Requested

Apple requests IPR of the Challenged Claims on the grounds set forth in the table shown below. Additional explanation and support for each ground is set forth in the Declaration of Brian Anthony, Ph.D. (APPLE-1003), referenced throughout this Petition. APPLE-1003, [16]-[160].



**MASIMO 2033**
**Apple v. Masimo**
**IPR2024-00242**

| Ground | Claims | Basis for Rejection (35 U.S.C. § 103) |
|---|---|---|
| 1A | 1, 9, 15, and 18 | §103 over Ackermans and Savant |
| 1B | 20 and 27 | §103 over Ackermans, Savant, and Venkatraman |
| 2A | 1, 9, 15, 18, 20 and 27 | §103 over Mendelson-799, Haar, Venkatraman, and Savant |

The ’745 patent claims priority to an application filed July 2, 2015, which Petitioner treats as the earliest effective filing date (“Critical Date”) of the Challenged Claims for purposes of this IPR. Each of the prior art references applied in the Grounds listed above qualifies as prior art to the ’745 patent on at least the bases shown below:

| Reference | Date | 35 U.S.C. §102 Prior Art Basis |
|---|---|---|
| Ackermans | 5/5/2011 (published) | 102(a)(1), (a)(2) |
| Savant | 12/12/2000 (issued) | 102(a)(1), (a)(2) |
| Venkatraman | 4/7/2015 (issued) | 102(a)(1), (a)(2) |
| Mendelson-799 | 10/5/2004 (issued) | 102(a)(1), (a)(2) |
| Haar | 04/13/1999 (issued) | 102(a)(1), (a)(2) |

None of these references were previously cited by the Examiner or used in a rejection. As explained in more detail below, Apple respectfully submits that discretionary institution denial under 35 U.S.C. § 325(d) would be unwarranted under these circumstances. *Advanced Bionics, LLC v. MED-EL*



**MASIMO 2033**
**Apple v. Masimo**
**IPR2024-00242**

*Elektromedizinische Geräte GmbH*, IPR2019-01469, Paper 6 (PTAB Feb. 13, 2020) (precedential).

## II. SUMMARY OF THE '745 PATENT

### A. Brief Description

The '745 patent, entitled "Advanced Pulse Oximetry Sensor," describes a "non-invasive, optical-based physiological monitoring system…." APPLE-1001, Face, Abstract.

### B. Summary of the Prosecution History

Masimo filed the application that issued as the '745 Patent (16/835,772) ("'772 Application") with a request for accelerated examination on March 30, 2020, approximately three months after Masimo initiated its serial litigation campaign against Apple through its January 9, 2020 complaint in the U.S. District Court for the Central District of California (CDCA) (Case No. 8:20-cv-00048), and approximately seven months after Apple filed IPRs challenging claims of related U.S. Patent No. 10,470,695 ("'695 Patent").[1]

On May 4, 2020, only five weeks after Masimo filed the '772 Application, and without having issued a single rejection, the examiner issued a notice of

[1] *See*, *generally*, IPR2020-01722, -01723. The '772 Application claimed priority to the application from which the '695 Patent issued (16/226,249), and incorporated that application by reference. APPLE-1001, 1:4-20



**MASIMO 2033**
**Apple v. Masimo**
**IPR2024-00242**

allowance. APPLE-1002, 147-153. Notably absent from that notice was any discussion whatsoever of art applied in Apple's IPRs, including art on which the present Petition's grounds are premised. *Id.*

Also notable is the fact that, in a final written decision issued May 5, 2022, the Board went on to invalidate every challenged claim of the '695 Patent based on art applied in Apple's IPRs. *Apple Inc. v. Masimo Corp.*, IPR2020-01722 Pap. 29, 2 (PTAB May 5, 2022)(finding "claims 6, 14, and 21 of the '695 patent…unpatentable" based on grounds including Ackermans, Sarantos, Mendelson-1991, and Chin).

There is no indication in the '745 Patent's file history that the examiner substantively considered any of the prior art applied in this Petition prior to allowing the '772 Application. Instead, the notice of allowance limits its discussion to U.S. Patent Pub. No. 2014/0361147 ("Fei") and U.S. Patent No. 5,830,137 ("Scharf"). APPLE-1002, 147-153.

The references and grounds of rejection applied in this Petition are materially different from those addressed by the examiner during prosecution. Further, this Petition compellingly demonstrates the obviousness of the Challenged Claims, including the claim features relied upon by the examiner in issuing the notice of allowance.

For example, all Challenged Claims recite some form of the following



**MASIMO 2033**
**Apple v. Masimo**
**IPR2024-00242**

limitation: a "material configured to change the first shape into a second shape by which the light emitted from one or more of the plurality of light-emitting diodes is projected towards the tissue." *See, e.g.,* APPLE-1001, claim 1. The '745 specification makes clear that this limitation describes a diffuser. *See, e.g., id*., 3:5-15. In Apple's prior IPR of Masimo's '695 patent (of which the '745 patent is a continuation), the Board invalidated as obvious a claim reciting the addition of "***a diffuser*** which receives, spreads, and emits the spread light, wherein the emitted spread light is directed at the tissue measurement site" to a "physiological monitoring device" nearly identical to that recited in the Challenged Claims. *See, e.g.,* APPLE-1017, claim 6; APPLE-1018, 21-30 (final written decision finding above claim of the '695 patent obvious over multiple combinations of art, including one based on the Ackermans reference).[2]

### C. Level of Ordinary Skill in the Art

A person of ordinary skill in the art relating to, and at the time of, the invention of the '745 Patent ("POSITA") would have been a person with a working knowledge of physiological monitoring technologies. The person would have had a Bachelor of Science degree in an academic discipline emphasizing the design of electrical, computer, or software technologies, in combination with training or at least one to two years of related work experience with capture and processing of

[2] All emphasis added unless otherwise indicated.



MASIMO 2033
Apple v. Masimo
IPR2024-00242

data or information, including but not limited to physiological monitoring technologies. APPLE-1003, [18]-[20]. Alternatively, the person could have also had a Master of Science degree in a relevant academic discipline with less than a year of related work experience in the same discipline. Id.

## III. CLAIM CONSTRUCTION UNDER 37 C.F.R. §§ 42.104(b)(3)

Petitioner submits that all claim terms should be construed according to the Phillips standard. *Phillips v. AWH Corp.*, 415 F.3d 1303 (Fed. Cir. 2005); 37 C.F.R. § 42.100. Here, based on the evidence below and the prior art's description of the claimed elements being similar to that of the '745 patent specification, no formal claim constructions are necessary in this proceeding because "claim terms need only be construed to the extent necessary to resolve the controversy." *Wellman, Inc. v. Eastman Chem. Co.*, 642 F.3d 1355, 1361 (Fed. Cir. 2011). APPLE-1003, [21].

Furthermore, Apple is not conceding that each challenged feature satisfies all statutory requirements such as 35 U.S.C. § 112. As this is an IPR petition, Apple is pursuing prior art-based grounds. Apple is not waiving any arguments concerning other grounds that can only be raised in district court.

## IV. THE CHALLENGED CLAIMS ARE UNPATENTABLE

### A. Ground 1A: Claims 1, 9, 15, and 18 are obvious over Ackermans in view of Savant

#### 1. Overview of Ackermans



MASIMO 2033
Apple v. Masimo
IPR2024-00242

Ackermans describes an optical sensor 10 for measuring the blood oxygenation levels of a user. APPLE-1011, Abstract, 1, 2-5. As shown in FIGS. 1 and 2 below, the optical sensor 10 includes "at least one light emitter (20) for emitting light (21) directed to a part of the skin (50) of a patient and at least one photo-detector (30) for detecting light (31) reflected from the skin (50). A housing (40) for carrying the at least one light emitter (20) and the at least one photo-detector (30) is provided, where the housing (40) has a contact area with the skin (50)." APPLE-1011, Abstract, 4:22-25.

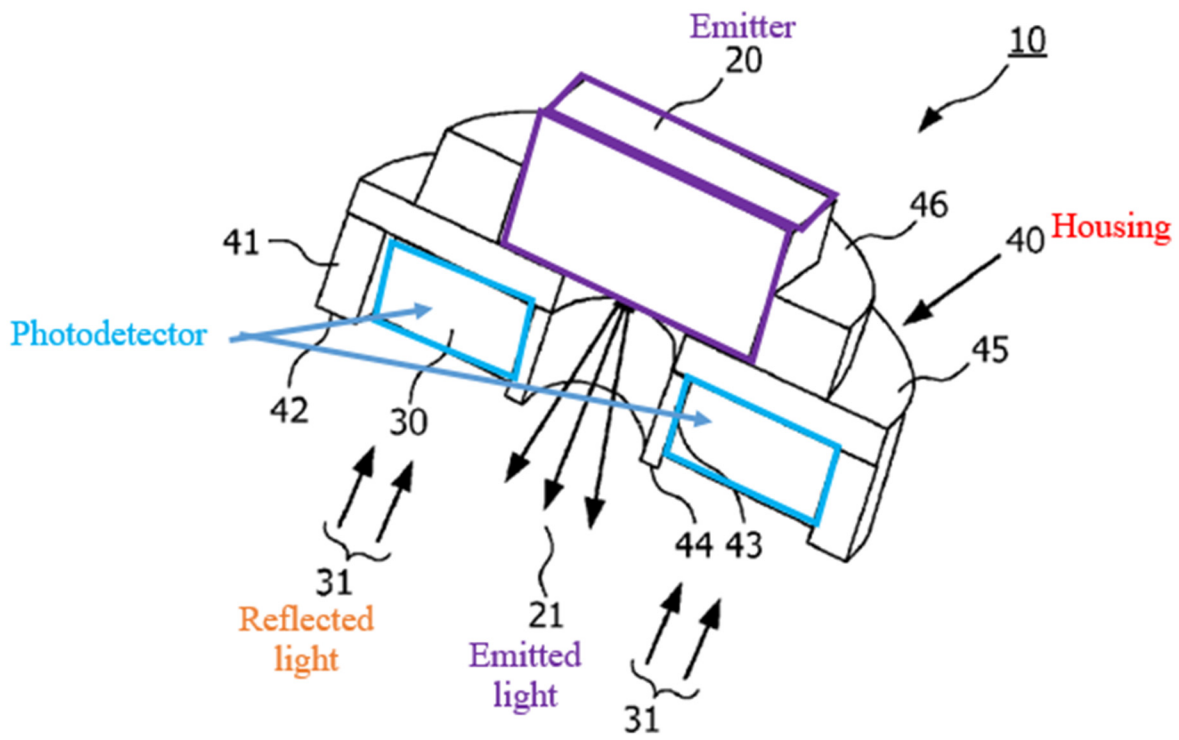


APPLE-1011, FIG. 1 (annotated)

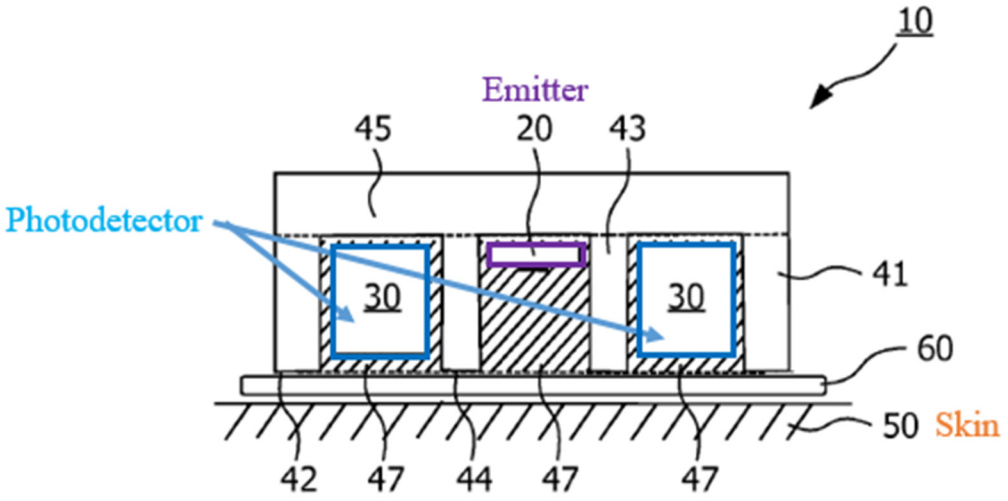


APPLE-1011, FIG. 2 (annotated)

In the example shown in FIG. 7, Ackermans' optical sensor 10 is implemented within a wristwatch for placement on a user at a tissue measurement site. APPLE-1011, 10:29-35.

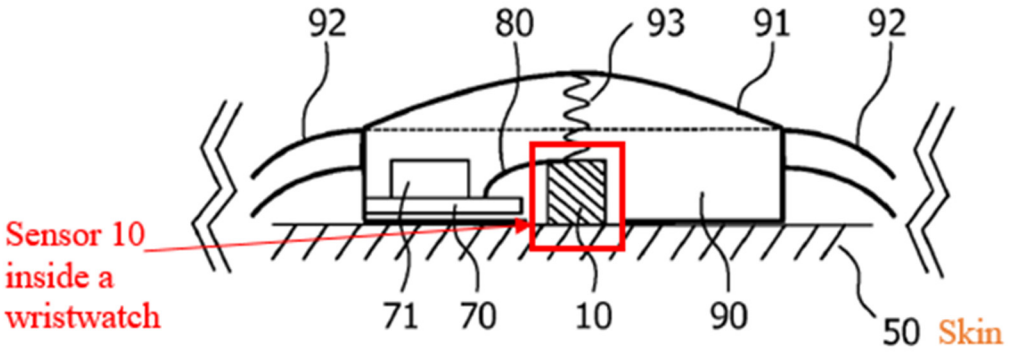


FIG. 7

APPLE-1011, FIG. 7 (annotated)

The frame 90 of the wristwatch is attachable to the skin 50 of a patient with an elastic band. APPLE-1011, 10:29-35. The "optical sensor 10 is positioned at



MASIMO 2033
Apple v. Masimo
IPR2024-00242

the center of the frame" 90. *Id*. Sensor 10 can be used to obtain physiological measurements such as blood oxygen levels (e.g., arterial oxygen saturation levels) and heart rates. APPLE-1011, 6:15-18, 1:8-18, 13:10-12 (claim 6). "Electrical signals from the at least one photo-detector are processed [by electrical elements] in order to determine an oximetry value." *Id.*, 3:10-12, 8:25-9:2, 10:3-10; APPLE-1003, [22]-[24].

### 2. Overview of Savant

Savant, titled "High Efficiency Monolithic Glass Light Shaping Diffuser and Method of Making," describes a "light shaping diffuser (LSD)" which "is a type of diffuser used in a variety of illuminating, imaging, and light projecting applications." APPLE-1012, 1:16-19. "A LSD is a transparent or translucent structure having an entrance surface, an exit surface, and light shaping structures formed on its entrance surface and/or in its interior." *Id*., 1:19-22. The "light shaping structures diffract light passing through the LSD so that the beam of light emitted from the LSD's exit surface exhibits a precisely controlled energy distribution along horizontal and vertical axes." *Id*., 1:30-33. Savant describes that "LSDs can be used to ***shape a light beam*** so that over 90% (and up to 95%-98%) of the light beam entering the LSD is directed towards and into contact with a target located downstream of the LSD." *Id*., 1:34-37. "A LSD can be made to collect incoming light and either (1) distribute it over a circular area from a

fraction of a degree to over 100°, or (2) send it into an almost unlimited range of elliptical angles." *Id*., 1:37-40. Savant describes that LSDs "exhibit a high degree of versatility because they may be employed with light from almost any source, including LEDs, daylight, a tungsten halogen lamp, or an arc lamp." *Id*., 1:49-51. LSD's can also be used to "control the angular spread of transmitted light." *Id*., 6:16-17; APPLE-1003, [25].

### 3. The combination of Ackermans and Savant

In the combination, the optical sensor 10 of Ackermans is modified to incorporate a light-shaping diffuser, such as those taught by Savant, between its emitters and the tissue measurement site. APPLE-1011, Abstract, 4:22-25, FIG. 1; APPLE-1012, 1:16-51, 6:16-17; APPLE-1003, [26].

### 4. Reasons to combine Ackermans and Savant

A POSITA would have been motivated and found it obvious to modify Ackermans to incorporate a light-shaping diffuser, such as those taught by Savant, between its emitters and the tissue measurement site in order to more precisely control the distribution of light from the emitters across the tissue measurement site. APPLE-1003, [27]. As described by Savant, a light-shaping diffuser provides precise control over the shape of the exiting light. APPLE-1012, 1:37-40 (a light-shaping diffuser "can be made to collect incoming light and either (1) distribute it over a circular area from a fraction of a degree to over 100°, or (2) send it into an



**MASIMO 2033**
**Apple v. Masimo**
**IPR2024-00242**

almost unlimited range of elliptical angles"). Such precise control would allow Ackermans' device to be calibrated to increase the amount of reflected light received by the photodiodes by precisely controlling the area of the tissue site being illuminated, thereby leading to more received light and a higher signal-to-noise ratio. APPLE-1011, Abstract, 4:22-25, FIG. 1; APPLE-1012, 1:16-51, 6:16-17; APPLE-1003, [27]. Use of a light-shaping diffuser would also enable different spatial configurations of photodiodes to be utilized in the optical sensor by allowing the distribution of light to be modified based on the specific diffuser chosen. *See id.*

Further, a POSITA would have found it obvious to modify Ackermans based on Savant's teachings because doing so entails the use of known solutions to improve similar systems and methods in the same way. APPLE-1003, [28]. Here, "when a patent 'simply arranges old elements with each performing the same function it had been known to perform' and yields no more than one would expect from such an arrangement, the combination is obvious." *KSR Int'l Co. v. Teleflex Inc.*, 550 U.S. 398, 417 (2007). A POSITA would have recognized that applying Savant's teachings to augment Ackermans would have led to predictable results without significantly altering or hindering the functions performed by Ackermans' system. APPLE-1003, [28].

In fact, a POSITA would have been motivated to incorporate the well-

known techniques of Savant into Ackermans to achieve the predictable benefits described in Savant. APPLE-1003, [29]; *see, e.g.,* APPLE-1012, 1:16-51, 6:16-17. Indeed, a POSITA would have had a reasonable expectation of success incorporating Savant's teachings into Ackermans, because Savant teaches that light-shaping diffusers are widely applicable to "almost any [light] source, including LEDs." *See* APPLE-1012, 1:49-51; APPLE-1003, [29].

Accordingly, for at least these reasons, augmenting Ackermans' device based on the teachings of Savant would have been routine and straightforward to a POSITA, and it would have been clear that such a combination would predictably work and provide the expected results. APPLE-1003, [30].

### 5. Analysis

#### (a) Claim 1

***[1.0] A physiological monitoring device comprising:***

Ackermans describes an optical sensor 10 for measuring the blood oxygenation levels of a user. APPLE-1011, Abstract, 1, 2-5. As shown in FIGS. 1 and 2 below, the optical sensor 10 includes "at least one light emitter (20) for emitting light (21) directed to a part of the skin (50) of a patient and at least one photo-detector (30) for detecting light (31) reflected from the skin (50). A housing (40) for carrying the at least one light emitter (20) and the at least one photo-detector (30) is provided, where the housing (40) has a contact area with the skin (50)." APPLE-1011, Abstract, 4:22-25; APPLE-1003, [31].



**MASIMO 2033**
**Apple v. Masimo**
**IPR2024-00242**

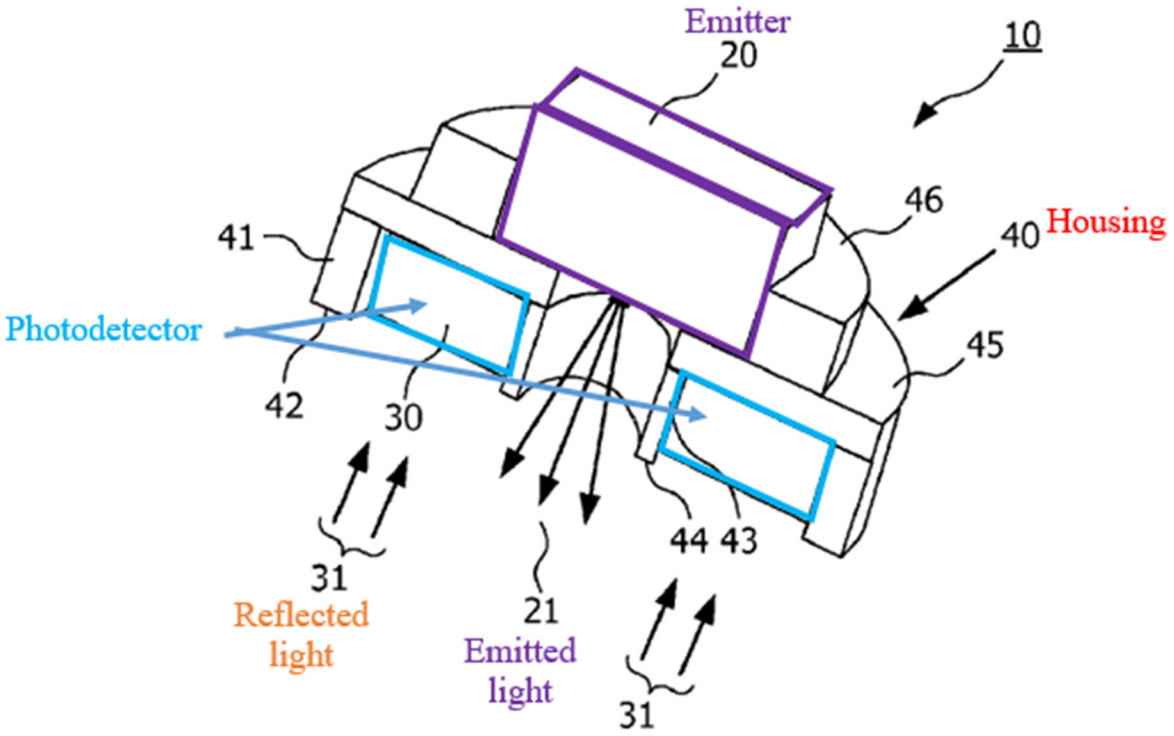


APPLE-1011, FIG. 1 (annotated)

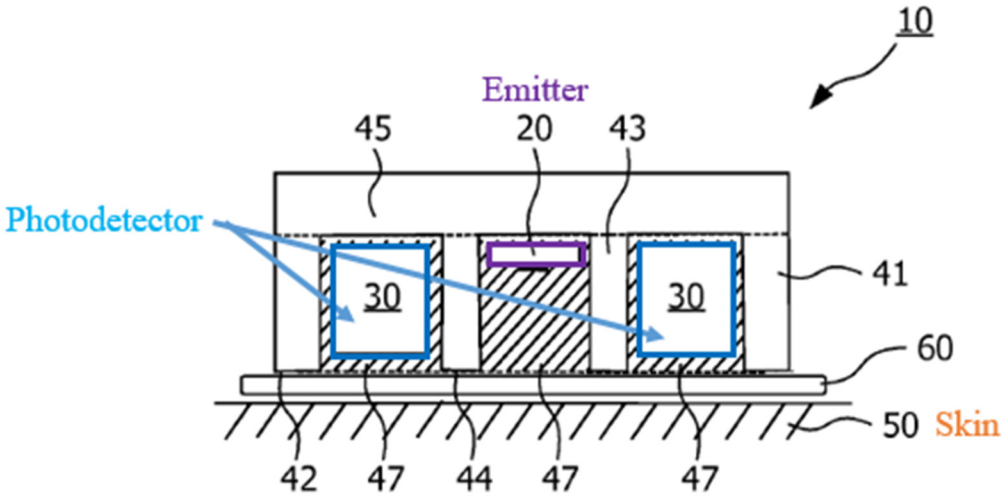


APPLE-1011, FIG. 2 (annotated)

In the example shown in FIG. 7, Ackermans' optical sensor 10 is implemented within a wristwatch for placement on a user at a tissue measurement site. APPLE-1011, 10:29-35; APPLE-1003, [32].



MASIMO 2033
Apple v. Masimo
IPR2024-00242

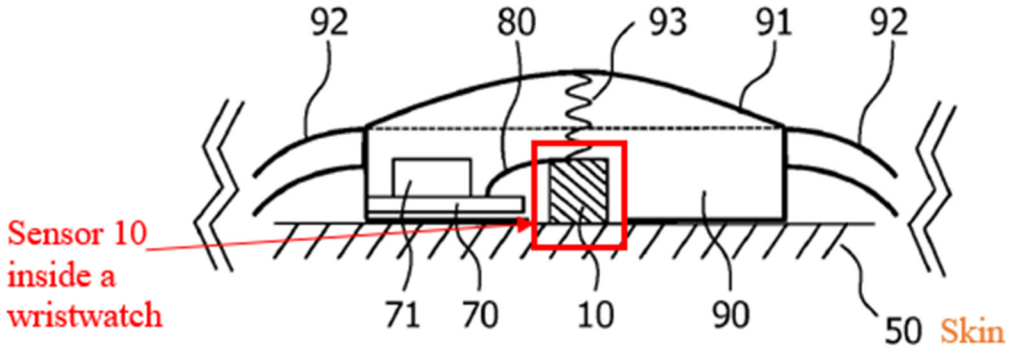


FIG. 7

APPLE-1011, FIG. 7 (annotated)

The frame 90 of the wristwatch is attachable to the skin 50 of a patient with an elastic band. APPLE-1011, 10:29-35. The "optical sensor 10 is positioned at the center of the frame" 90. *Id*. Sensor 10 can be used to obtain physiological measurements such as blood oxygen levels (e.g., arterial oxygen saturation levels) and heart rates. APPLE-1011, 6:15-18, 1:8-18, 13:10-12 (claim 6). "Electrical signals from the at least one photo-detector are processed [by electrical elements] in order to determine an oximetry value." *Id.*, 3:10-12, 8:25-9:2, 10:3-10; APPLE-1003, [33].

Accordingly, Ackermans renders obvious "a wrist-worn physiological monitoring device configured for placement on a user at a tissue measurement site." APPLE-1003, [34].



**MASIMO 2033**
**Apple v. Masimo**
**IPR2024-00242**

***[1.1] a plurality of light-emitting diodes configured to emit light in a first shape;***

As explained above with respect to [1.0], Ackermans describes an optical sensor 10 that includes "at least one light emitter (20) for emitting light (21) directed to a part of the skin (50) of a patient and at least one photo- detector (30) for detecting light (31) reflected from the skin (50)." APPLE-1011, Abstract, 4:22-25; APPLE-1003, [35].

In more detail, Ackermans' optical sensor 10 includes a light emission source (emitter 20 with housing 46) comprising a plurality of emitters in the form of LEDs that emit light at different wavelengths. APPLE-1011, 6:1-8. These LEDs are configured to irradiate the tissue measurement site by emitting light 21 towards the tissue measurement site as shown in FIGS. 1, 3A, and 3B. *Id.*, 6:1-8. Ackermans explains that emitted light enters the skin and photodetectors detect light that reflects back from the skin. *Id.*, 2:15-23, 6:1-8, 7:5-10, Abstract; APPLE-1003, [36].



**MASIMO 2033**
**Apple v. Masimo**
**IPR2024-00242**

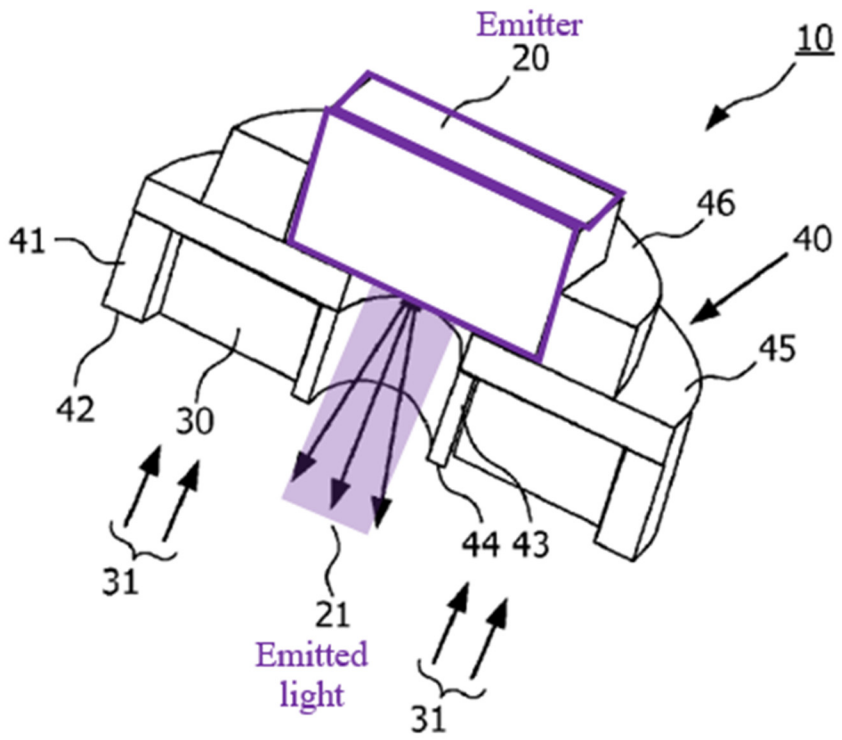


APPLE-1011, FIG. 1 (annotated).

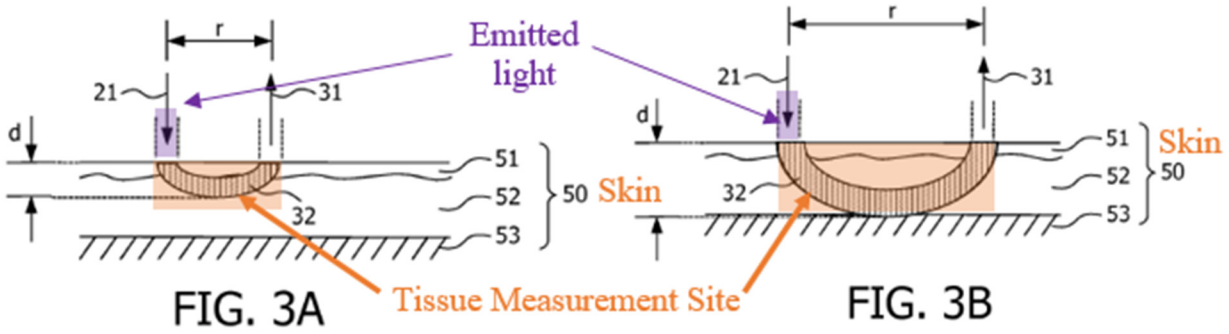


APPLE-1011, FIGS. 3A, 3B (depicting the tissue measurement site and reflection therefrom).

***[1.2] a material configured to be positioned between the plurality of light-emitting diodes and tissue on a wrist of a user when the physiological monitoring device is in use, the material configured to change the first shape into a second shape by which the light emitted from one or more of the plurality of light-emitting diodes is projected towards the tissue;***

In the combination, Ackermans describes that the optical sensor 10 is

implemented within a "wristwatch" that is "attachable to the skin 50 of a patient with an elastic band 92, for example an ***arm wrist***." APPLE-1011, 10:29-35; APPLE-1003, [38].

Also in the combination, Savant describes a "***light shaping diffuser*** (LSD)" which "is a type of diffuser used in a variety of illuminating, imaging, and light projecting applications." APPLE-1012, 1:16-19. Savant describes that "LSDs can be used to ***shape a light beam*** so that over 90% (and up to 95%-98%) of the light beam entering the LSD is directed towards and into contact with a target located downstream of the LSD." *Id*., 1:34-37. "A LSD can be made to collect incoming light and either (1) distribute it over a circular area from a fraction of a degree to over 100°, or (2) send it into an almost unlimited range of elliptical angles." *Id*., 1:37-40. Savant describes that LSDs "exhibit a high degree of versatility because they ***may be employed with light from almost any source, including LEDs, daylight***, a tungsten halogen lamp, or an arc lamp." *Id*., 1:49-51. LSD's can also be used to "control the angular spread of transmitted light." *Id*., 6:16-17; APPLE-1003, [39].

The following modified FIG. 1 from Ackermans shows the optical sensor 10 incorporating a light shaping diffuser, as described by Savant. APPLE-1003, [40]:



**MASIMO 2033**
**Apple v. Masimo**
**IPR2024-00242**

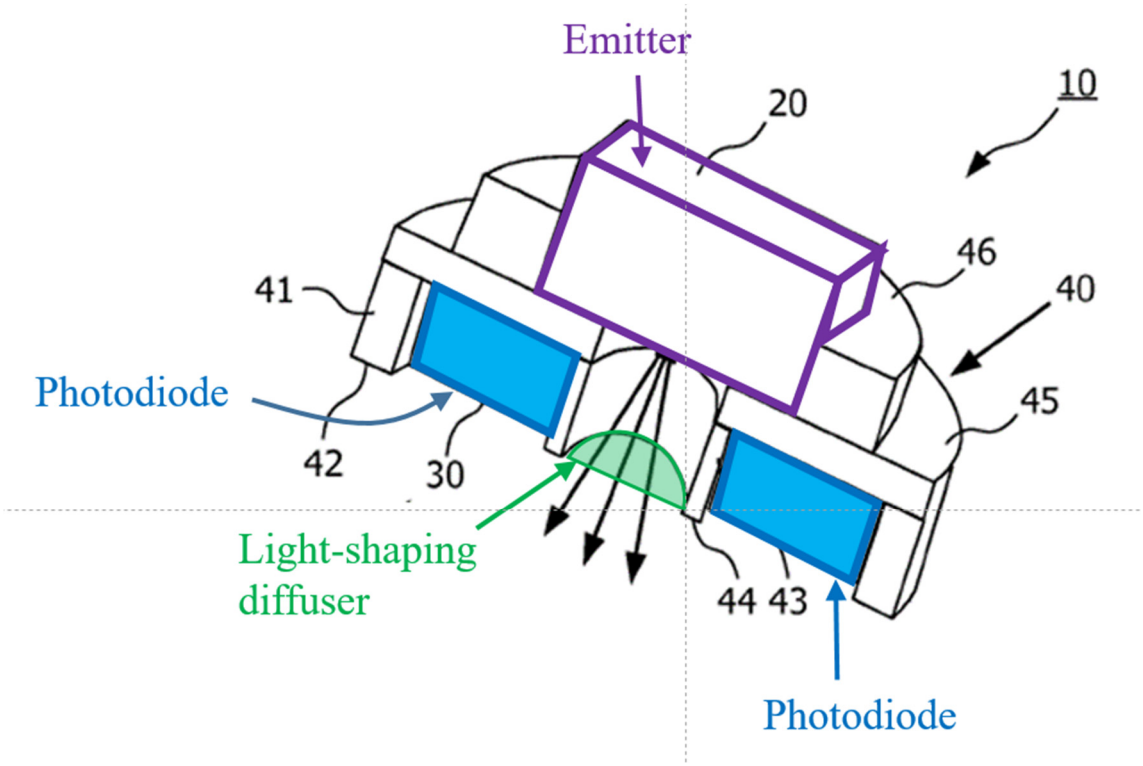


APPLE-1011, FIG. 1 (annotated and modified to add light-shaping diffuser from Savant, shown in green)

As previously discussed, a POSITA would have been motivated to implement a light-shaping diffuser, such as those described in Savant, in the optical sensor 10 of Ackermans. *See* Section IV.A.3-4, *supra*.

***[1.3] a plurality of photodiodes configured to detect at least a portion of the light after the at least the portion of the light passes through the tissue, the plurality of photodiodes further configured to output at least one signal responsive to the detected light;***

As explained above with respect to [1.0] and shown below in FIG. 1, Ackermans discloses at least one photo-detector (30) for detecting light (31) reflected from the skin (50). APPLE-1011, Abstract, 2:15-23, 4:22-25. "The [at

least one] photo-detector 30 is circular in shape and mounted in the circular groove formed by the base plate 45, the outer ring 41 and the inner ring 42." *Id*. In some implementations, a plurality of detectors can be implemented as "small photodiodes that are arranged between the inner ring 43 and the outer ring 41." *Id.*, 6:9-15. As noted in [1.1], light emitted by the plurality of emitters enters the skin, is attenuated, reflects back from the skin, and is subsequently detected by the photodetectors, as shown in the following annotated figures from Ackermans. *Id.*, 2:15-23, 6:1-8, 7:5-10, Abstract; FIGS. 3A, 3B; APPLE-1003, [42]:

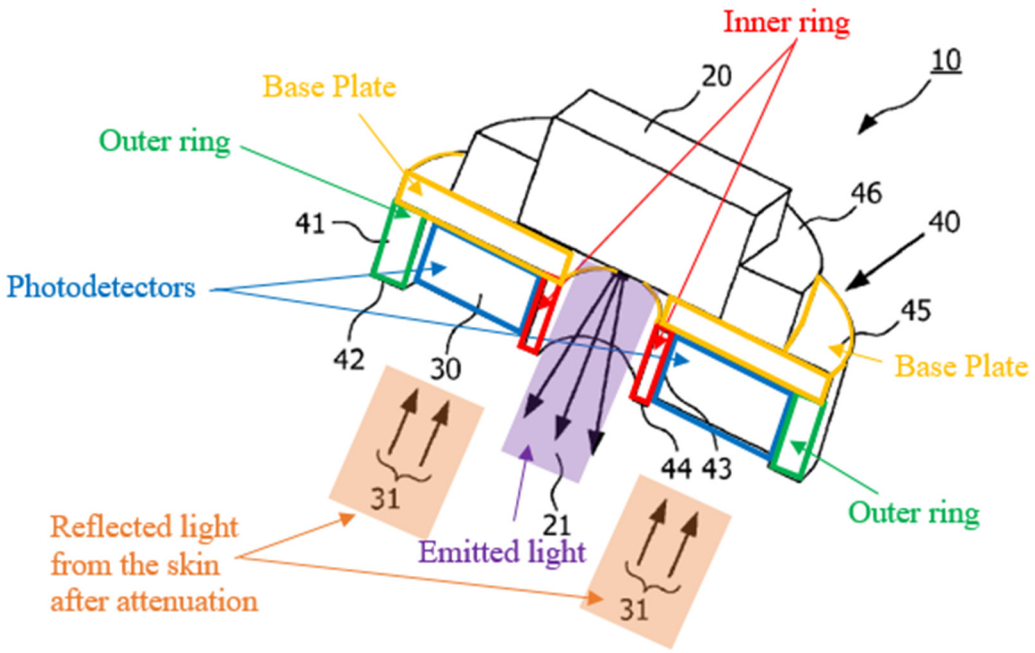


APPLE-1011, FIG. 1 (annotated)

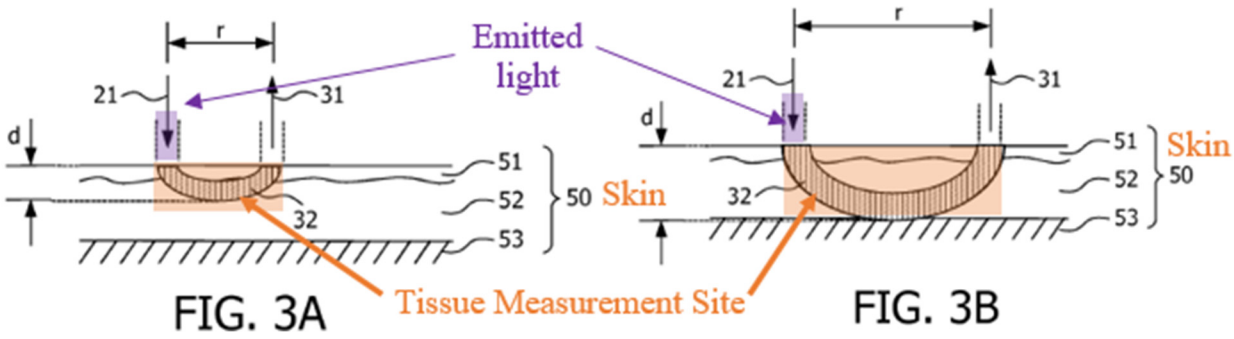


APPLE-1011, FIGS. 3A, 3B (annotated, depicting the tissue measurement site and reflection therefrom).

Ackermans further describes that each photodiode produces "***[e]lectrical signals***" representing detected light, which are then "processed in order to determine an oximetry value." *Id*., 3:11-12; APPLE-1003, [43].

***[1.4] a surface comprising a dark-colored coating, the surface configured to be positioned between the plurality of photodiodes and the tissue when the physiological monitoring device is in use,***

As previously discussed (*see* [1.0], *supra*), in the combination, Ackermans' optical sensor 10 is implemented within a wristwatch for placement on a user at a tissue measurement site, as shown in FIG. 7. APPLE-1011, 10:29-35; APPLE-1003, [44].



**MASIMO 2033**
**Apple v. Masimo**
**IPR2024-00242**

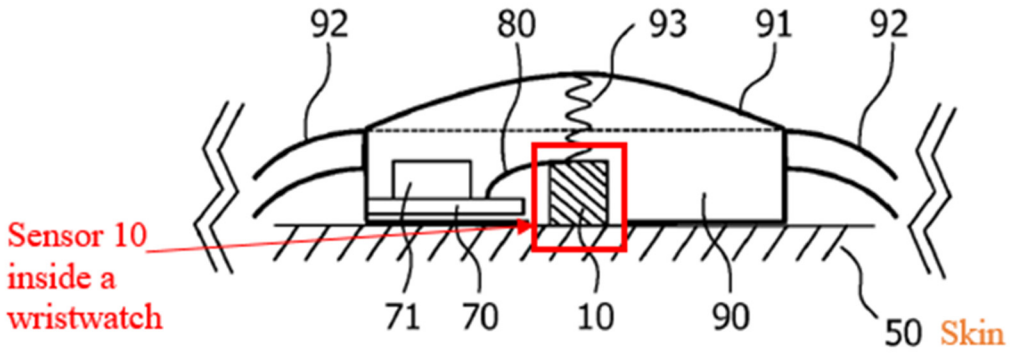


FIG. 7

APPLE-1011, FIG. 7 (annotated)

The frame 90 of the wristwatch is attachable to the skin 50 of a patient with an elastic band. APPLE-1011, 10:29-35. The "optical sensor 10 is positioned at the center of the frame" 90. *Id*. Ackermans further describes that "in addition to the elastic band 92, the frame 90 could be attached to the skin 50 by ***a medical grade adhesive***" (*i.e.*, a coating). *Id*., 11:10-11. Ackermans describes that "the adhesive could be transparent and fix the sensor 10 as well as the frame 90." *Id*., 11:11-12. Ackermans also describes that "***the adhesive could be provided with a central opening*** that leaves the vicinity of the sensor 10 on the skin blank and only fixes the frame 90." *Id*., 11:12-15. In such a case, Ackermans teaches that "***the adhesive does not have to be transparent***," and thus is opaque or dark-colored. *Id*.; APPLE-1003, [45].

***[1.5] wherein an opening defined in the dark-colored coating is configured to allow at least a portion of light reflected from the tissue to pass through the surface;***

As discussed above (*see* [1.4], *supra*), Ackermans describes that the sensor 10 is attached to the user's skin using a non-transparent adhesive (i.e., a dark-colored coating). Ackermans also describes that "the adhesive could be provided with ***a central opening*** that leaves the vicinity of the sensor 10 on the skin blank and only fixes the frame 90," thereby allowing light reflected from the tissue to pass through. APPLE-1011, 11:12-15; APPLE-1003, [46].

***[1.6] a light block configured to prevent at least a portion of the light emitted from the plurality of light-emitting diodes from reaching the plurality of photodiodes without first reaching the tissue; and***

As explained above with respect to [1.0], [1.3], Ackermans' inner ring 43 "shadows the photodetector 30 from emitted light 21" and operates as a light block that prevents light from the emitters 20 from being detected directly by the photodetectors 30 without attenuation by the user's skin. APPLE-1011, 5:10-15. APPLE-1003, [47].

In more detail, Ackermans' inner ring 43 includes rim 44. *Id.*, 4:25. As shown in FIGS. 1 and 2 below, A POSITA would have understood that the inner ring 43 and its rim 44 form a wall between the emitter 20 (light emission source) and the plurality of detectors 30. *Id.,* 4:22-32, 6:22-31; APPLE-1003, [48]. "Both the light emitter 20 and the photo-detector 30 are mounted recessed from the plane

defined by the rims 42 and 44. ***As a result, the inner ring 43 prevents light emitted by the light emitter 20 from shining directly into the photo–detector 30***." *Id.*, 6:31-35; APPLE-1003, [48].

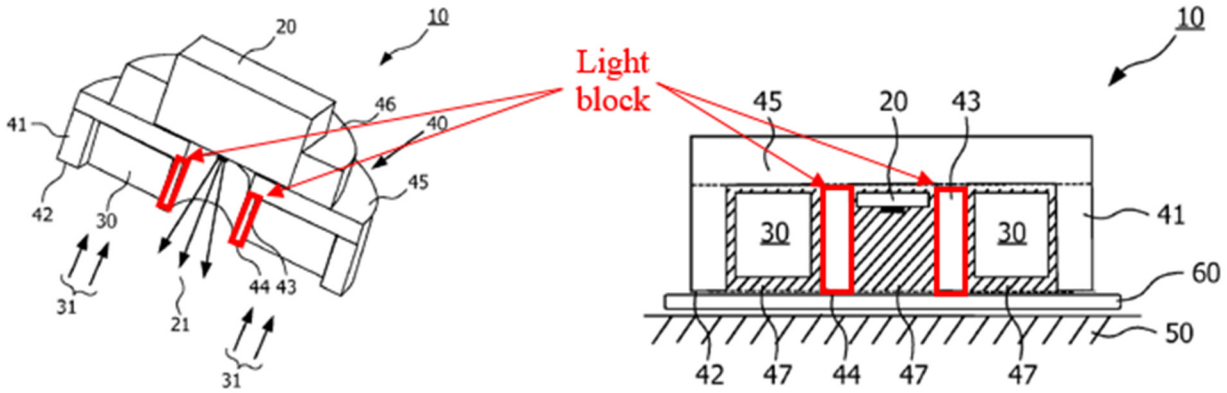


APPLE-1011, FIGS. 1 (left) and 2 (right), (annotated)

***[1.7] a processor configured to receive and process the outputted at least one signal and determine a physiological parameter of the user responsive to the outputted at least one signal.***

As previously discussed, Ackermans describes that the plurality of photodiodes produce "***[e]lectrical signals***" representing detected light, which are then "processed in order to ***determine an oximetry value***" (*i.e.*, a physiological parameter). APPLE-1011, 3:11-12; APPLE-1003, [49]. Ackermans further describes an "electrical element" (*i.e.*, a processor) for "***receiving and processing the electrical signals of the photo-detectors***." APPLE-1011, 10:6-8; APPLE-1003, [49].



**MASIMO 2033**
**Apple v. Masimo**
**IPR2024-00242**

### (b) Claim 9

***[9.0] The physiological monitoring device of claim 1, wherein the physiological parameter comprises oxygen saturation.***

In the combination, Ackermans describes that the sensor 10 determines physiological parameters including "oxygen saturation." APPLE-1011, 6:15-18 ("[a] typical application of the shown optical medical sensor 10 could be the measurement of the ***oxygenation level of blood*** in a pulse oximeter"), 1:8-18 ("[t]he non-invasive measurement of the ***oxygen saturation*** in arterial blood, also called pulse oximetry, is an application of optical medical sensors of particular importance"), 13:10-12 (claim 6) ("determining the arterial ***oxygen saturation*** and/or heart rate in a pulse oximeter"); APPLE-1003, [50].

### (c) Claim 15

***[15.0] A physiological monitoring device comprising:***

*See* [1.0].

***[15.1] a plurality of light-emitting diodes configured to emit light proximate a wrist of a user;***

As previously discussed (*see* 1.1]), Ackermans describes that the optical sensor 10 includes a plurality of light emitting diodes. Ackermans further describes that the optical sensor 10 is implemented within a "wristwatch" that is "attachable to the skin 50 of a patient with an elastic band 92, for example an ***arm wrist***." APPLE-1011, 10:29-35; APPLE-1003, [52]. This configuration is shown in FIG. 7 from Ackermans:



**MASIMO 2033**
**Apple v. Masimo**
**IPR2024-00242**

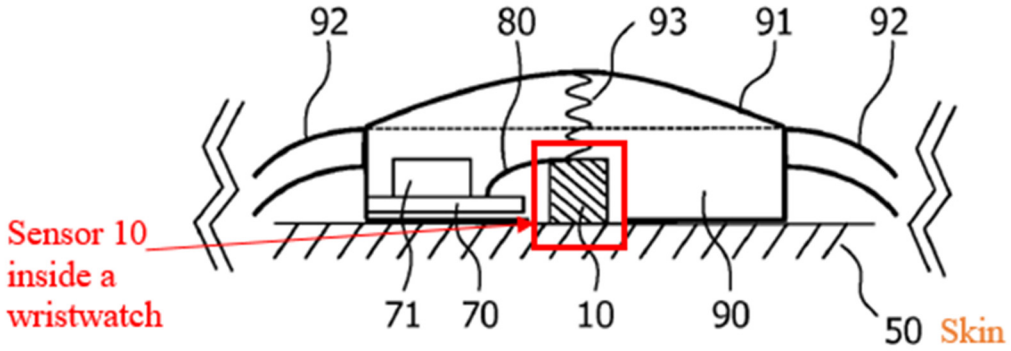


FIG. 7

APPLE-1011, FIG. 7 (annotated)

In this configuration, the plurality of light emitting diodes would be configured to emit light "directed onto the skin" of the user's wrist. APPLE-1011, 4:34-5:2; APPLE-1003, [53].

***[15.2] a light diffusing material configured to be positioned between the plurality of light-emitting diodes and a tissue measurement site on the wrist of the user when the physiological monitoring device is in use;***

*See* [1.2].

***[15.3] a light block having a circular shape;***

As previously discussed, in the combination, Ackermans describes that the optical sensor 10 includes a light block ("inner ring 43"). *See* [1.6]. The inner ring 43 is circular in shape, as denoted by the term "ring" and shown in FIGS. 1 and 2 from Ackermans. APPLE-1003, [55]:

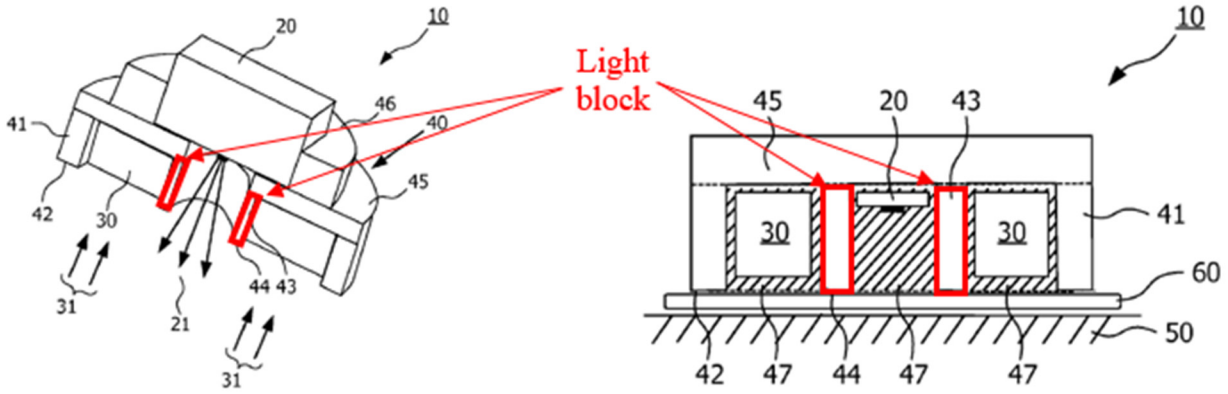


APPLE-1011, FIGS. 1 (left) and 2 (right), (annotated)

***[15.4] a plurality of photodiodes configured to detect at least a portion of the light emitted from the plurality of light-emitting diodes after the light passes through the light diffusing material and a portion of the tissue measurement site encircled by the light block[3]***

As previously discussed (*see* [1.3], *supra*), in the combination, Ackermans describes that the sensor 10 includes a plurality of photodiodes configured to detect light emitted by the light emitting diodes that is reflected by the tissue measurement site. As also previously discussed (*see* [15.3], *supra*), the sensor 10 includes a light block ("inner ring 43") having a circular shape. APPLE-1003, [56].

As explained above, Ackermans describes that the plurality of photodiodes "are arranged between the inner ring 43" (the light block) "and the outer ring 41."

---

[3] Petitioner does not concede that this limitation, or any other limitation of '745 patent, is not indefinite, and reserves the right to argue indefiniteness in other proceedings where such arguments are permitted.



MASIMO 2033
Apple v. Masimo
IPR2024-00242

APPLE-1011, 6:9-15; *see* [1.3], *supra*. Ackermans describes that the inner ring 43 (the light block) prevents light from the light-emitting diodes 20 from reaching the photodiodes 30 without traveling through the tissue measurement site. APPLE-1011, 6:32-34 ("the inner ring 43 prevents light emitted by the light emitter 20 from shining directly into the photo-detector 30."). Thus, any emitted light that reaches the photodiodes 30 will have traveled through the only area of the tissue measurement site that is exposed to the light emitted by the light emitting diodes 20: the area that is encircled by the inner ring 43 (*i.e.*, the light block). *See id.,* 6:32-34, FIG. 2; *see* [1.3], *supra*; APPLE-1003, [57]. The following annotated FIG. 2 from Ackermans shows this configuration:

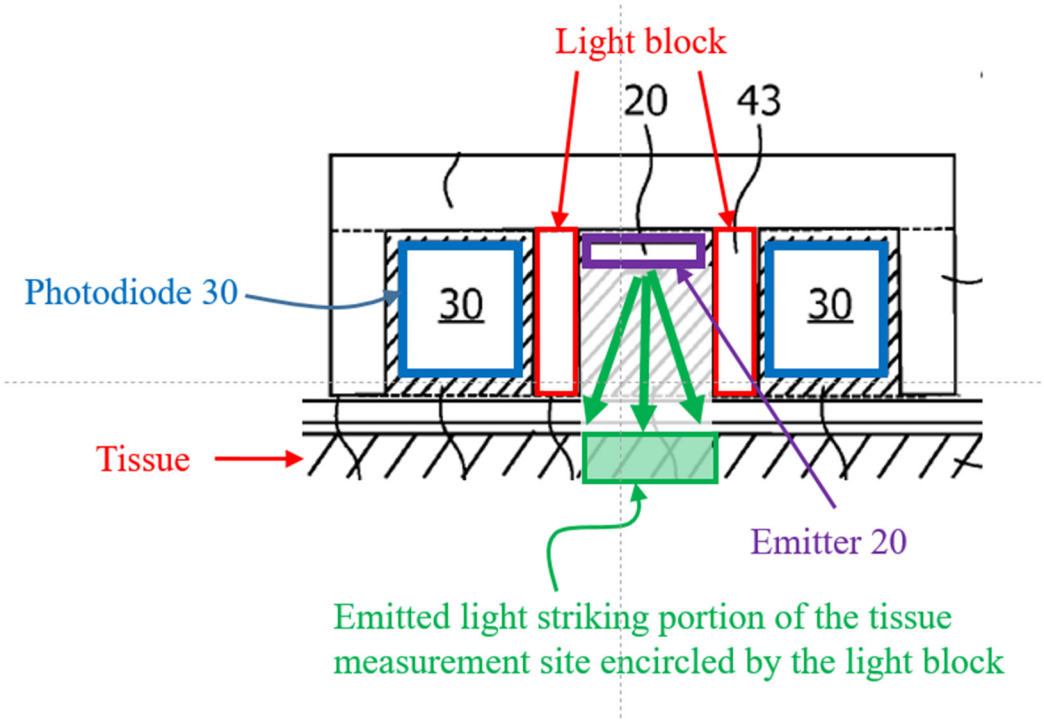


APPLE-1011, Detail of FIG. 2 (annotated)



MASIMO 2033
Apple v. Masimo
IPR2024-00242

***[15.5] wherein the plurality of photodiodes are arranged in an array having a spatial configuration corresponding to a shape of the portion of the tissue measurement site encircled by the light block***

As explained above, Ackermans describes that the plurality of photodiodes "are arranged between the inner ring 43 and the outer ring 41." APPLE-1011, 6:9-15; *see* [1.3], *supra*. Because the photodiodes 30 are arranged between two rings, a POSITA would have understood that detectors are arranged in an array having a circular spatial configuration. APPLE-1003, [58]; *see, e.g.,* APPLE-1011, 6:9-15. And because this array is shaped by the inner ring 43 (the light block, *see* [1.6], *supra*), it also corresponds to and encircles the circular portion of the tissue measurement site. In particular, as explained above, the inner ring 43 encircles the tissue measurement site because light from the emitters can only fall within this circular area (from which subsequent scattering and reflection occurs). APPLE-1003, [58]; *see* [1.3], [15.4], *supra*.

***[15.6] wherein the plurality of photodiodes are further configured to output at least one signal responsive to the detected light, and***

*See* [1.3].

***[15.7] wherein the plurality of light-emitting diodes and the plurality of photodiodes are arranged in a reflectance measurement configuration;***

As explained above in [1.0], in one of the embodiments shown in FIG. 7, Ackermans' optical sensor 10 is implemented within a wristwatch for placement on a user at a tissue measurement site. APPLE-1011, 10:29-35; APPLE-1003, [60].



**MASIMO 2033**
**Apple v. Masimo**
**IPR2024-00242**

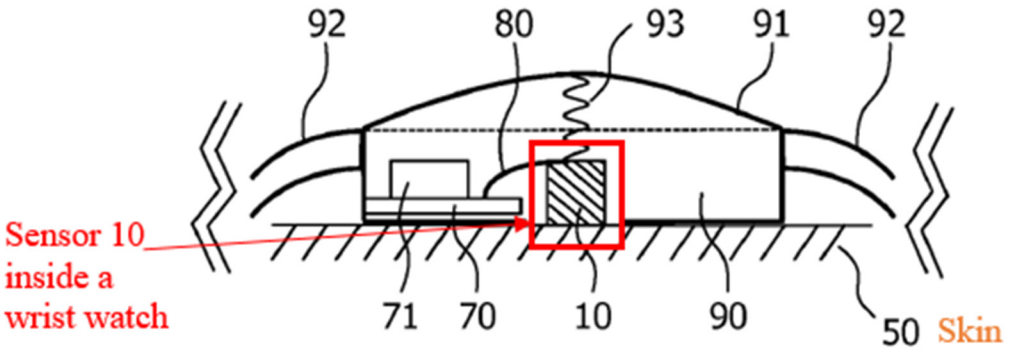


FIG. 7

APPLE-1011, FIG. 7 (annotated)

Ackermans explains that a transmissive pulse oximeter measurement configuration occurs when a light emitter and photo-detector are on opposite sides of skin tissue, and that a reflectance pulse oximeter measurement configuration occurs when a light emitter and photo-detector are adjacent to each other on the same side of skin tissue. APPLE-1011, 1:18-23; APPLE-1003, [61].

Consistent with this characterization of a reflectance measurement configuration, the configuration depicted in FIG. 7 (which includes emitters and detectors in sensor 10 on the same side of the tissue measurement site) would have been understood by a POSITA to be a reflectance measurement configuration. APPLE-1003, [62]; *see, e.g.* APPLE-1011, 2:15-23 ("a medical optical sensor comprises … at least one photo-detector for detecting light ***reflected from the skin***"), 3:8-12 ("light is then ***reflected by the patient's skin*** and received by at least one photo-detector"), 4:22-25, 2:15-23, 5:2-15, 6:1-8, 7:5-28, FIGS. 3A, 3B.

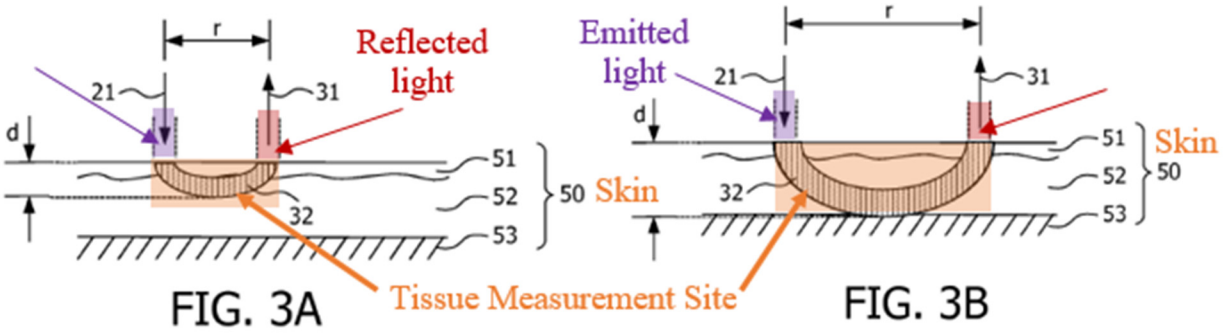


APPLE-1011, FIGS. 3A (left), 3B (right) (annotated, depicting a reflection measurement)

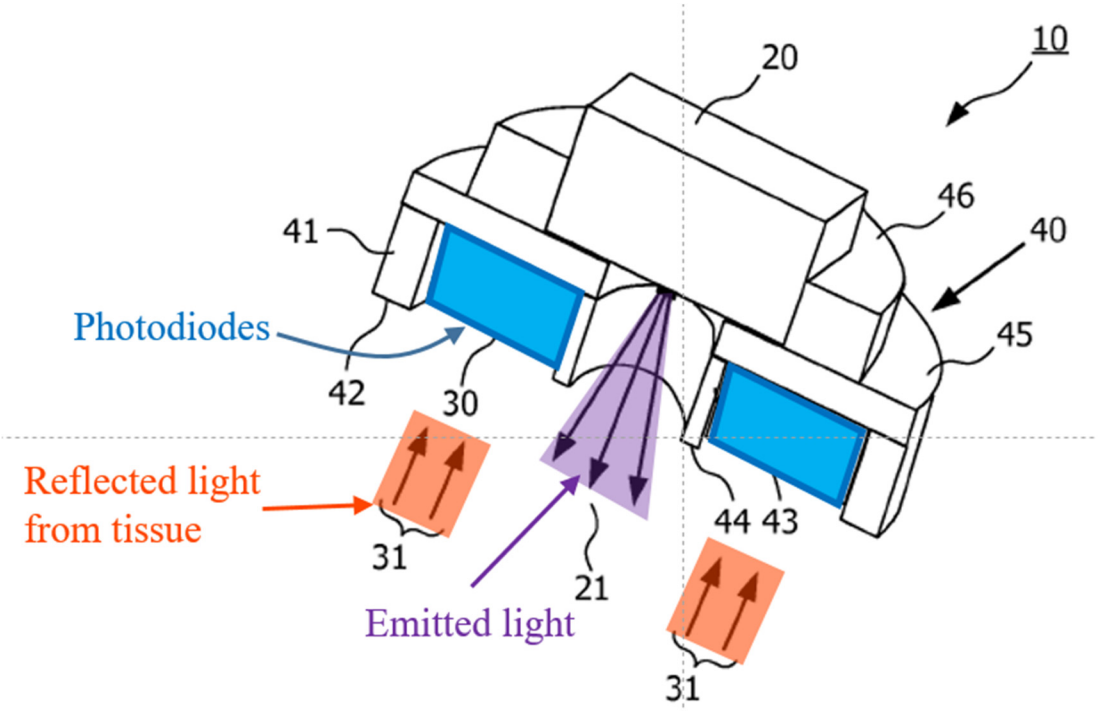


APPLE-1011, FIG. 1 (annotated, showing reflected light 31, and LEDs 20 and photodiodes 30 on the same side of the tissue measurement site)

***[15.8] wherein the light block is configured to optically isolate the plurality of light-emitting diodes from the plurality of photodiodes by preventing at least a portion of light emitted from the plurality of light-emitting diodes from reaching the plurality of photodiodes without first reaching the portion of the tissue measurement site;***

*See* [1.6].

***[15.9] a processor configured to receive and process the outputted at least one signal and determine a physiological parameter of the user responsive to the outputted at least one signal; and***

*See* [1.7].

***[15.10] wherein the physiological monitoring device is configured to transmit physiological parameter data to a separate processor.***

In the combination, Ackermans describes that the sensor 10 includes "wireless technology for ***transmitting the measured physiological parameters to a monitor station***." APPLE-1011, 10:24-25. A POSITA would have understood the "monitor station" to which the physiological parameters are transmitted to be a "processor." *See id.;* APPLE-1003, [65].

#### (d) Claim 18

***[18.0] The physiological monitoring device of claim 15, wherein the physiological parameter comprises oxygen saturation.***

*See* [9.0].

### B. Ground 1B: Claims 20 and 27 are obvious over Ackermans and Savant in view of Venkatraman

#### 1. Overview of Venkatraman

Venkatraman teaches a portable biometric monitoring device with a touchscreen display that can be worn on the wrist like a watch. APPLE-1006,



MASIMO 2033
Apple v. Masimo
IPR2024-00242

12:16-21, 15:19-26, 52:23-53:18. In particular, Venkatraman describes a "biometric monitoring device[] ... adapted to be worn or carried on the body of a user ... including [an] optical heart rate monitor" designed to "be a wrist-worn or arm-mounted accessory such as a watch or bracelet." APPLE-1006, 37:29-33. Venkatraman's monitoring device is "small in size so as to be unobtrusive for the wearer" and "designed to be able to be worn without discomfort for long periods of time and to not interfere with normal daily activity." APPLE-1006, 14:28-36. Venkatraman device also includes a digital display with "uses capacitive touch detection" to display data acquired or stored locally on the wristwatch. APPLE-1006, 53:19-55:51; APPLE-1003, [67].

Venkatraman further discloses transmitting information wirelessly from its monitoring device to a secondary device such as a smartphone. APPLE-1006, 31:1-16, 57:20-53. Venkatraman also discloses that such a configuration allows the secondary device to act as a user interface for the wrist-worn wearable physiological device. APPLE-1006, 57:42-44. Venkatraman further discloses that the secondary device (*i.e.*, smartphone) can show various metrics regarding the user's health, and receive inputs through a touch-screen display. APPLE-1006, 37:41-63, 55:29-51, 57:20-58:9; APPLE-1003, [68].

### 2. The combination of Ackermans, Savant, and Venkatraman

Ackermans describes that its sensor 10 includes "wireless technology for



MASIMO 2033
Apple v. Masimo
IPR2024-00242

transmitting the measured physiological parameters to a monitor station." APPLE-1011, 10:24-25; APPLE-1003, [69]. In the combination, Ackermans sensor 10 (as previously modified based on Savant) is configured to wirelessly transmit the measured physiological parameters to the secondary device (*e.g.*, a smartphone) taught by Venkatraman, which then presents various metrics regarding the user's health based on the received physiological parameters through a touch-screen display. APPLE-1006, 37:41-63, 55:29-51, 57:20-58:9; APPLE-1003, [69].

#### 3. Reasons to combine Ackermans, Savant, and Venkatraman

A POSITA would have been motivated to wirelessly connect the wristband-type physiological monitoring device of Ackermans (as previously modified based on Savant) to a secondary processing device, such as a smartphone, having a user interface with a touch screen display, as taught by Venkatraman, in order to increase the functionality of the system without significantly increasing the power consumption of Ackermans' sensor. APPLE-1003, [70]; *see, e.g.,* APPLE-1011, 10:23-27; APPLE-1006, 37:41-63, 55:29-51, 57:20-58:9. For example, Ackermans describes that it is important for its wearable sensors to avoid "power-consuming" features, such as large amounts of data processing or elaborate graphical displays, because such added features may necessitate "a power supply unit with a sufficient battery capacity and an according heavy weight." APPLE-1011, 10:23-27; APPLE-1003, [70]. By wirelessly "transmitting … measured



**MASIMO 2033**
**Apple v. Masimo**
**IPR2024-00242**

physiological parameters to a monitor station," such as the smartphone taught by Venkatraman, additional features can be realized, such as the calculation additional metrics regarding the user's health, without the need to increase the battery capacity, and therefore weight, of Ackermans sensor 10. APPLE-1003, [70]; *see, e.g.,* APPLE-1011, 10:23-27; APPLE-1006, 37:41-63, 55:29-51, 57:20-58:9.

Further, a POSITA would have found it obvious to modify Ackermans based on Venkatraman because doing so entails the use of known solutions to improve similar systems and methods in the same way. Here, "when a patent 'simply arranges old elements with each performing the same function it had been known to perform' and yields no more than one would expect from such an arrangement, the combination is obvious." *KSR Int'l Co. v. Teleflex Inc.,* 550 U.S. 398, 417 (2007). A POSITA would have recognized that applying Venkatraman's teachings of receiving physiological parameters wirelessly on a smartphone to Ackermans' system would have led to the predictable result, taught by Venkatraman, of a smartphone displaying information based on the received physiological parameters. APPLE-1011, 10:23-27; APPLE-1006, 37:41-63, 55:29-51, 57:20-58:9; APPLE-1003, [71].

Accordingly, for at least these reasons, a POSITA would have been motivated and found it obvious to implement the combination of Ackermans and Venkatraman as described above. APPLE-1003, [72]. Such a modification would



**MASIMO 2033**
**Apple v. Masimo**
**IPR2024-00242**

have been routine and straightforward to a POSITA, and it would have been clear that such a combination would predictably work and provide the expected functionality, because Venkatraman describes a physiological monitoring device that operated in the proposed manner. APPLE-1003, [72]; *see, e.g.,* APPLE-1006, 37:41-63, 55:29-51, 57:20-58:9.

### 4. Analysis

#### (a) Claim 20

***[20.0] A system configured to measure one or more physiological parameters of a user, the system comprising:***

*See* Ground 1A, [1.0].

***[20.1] a physiological monitoring device comprising:***

*See* Ground 1A, [1.0].

***[20.2] a plurality of light-emitting diodes configured to emit light in a first shape;***

*See* Ground 1A, [1.1].

***[20.3] a material configured to be positioned between the plurality of light-emitting diodes and tissue of the user when the physiological monitoring device is in use, the material configured to change the first shape into a second shape by which the light emitted from one or more of the plurality of light-emitting diodes is projected towards the tissue;***

*See* Ground 1A, [1.2].

***[20.4] a plurality of photodiodes configured to detect at least a portion of the light after the at least the portion of the light passes through the tissue, the plurality of photodiodes further configured to output at least one signal responsive to the detected light;***

*See* Ground 1A, [1.3].



**MASIMO 2033**
**Apple v. Masimo**
**IPR2024-00242**

***[20.5] a surface comprising a dark-colored coating, the surface configured to be positioned between the plurality of photodiodes and the tissue when the physiological monitoring device is in use,***

*See* Ground 1A, [1.4].

***[20.6] wherein an opening defined in the dark-colored coating is configured to allow at least a portion of light reflected from the tissue to pass through the surface;***

*See* Ground 1A, [1.5].

***[20.7] a light block configured to prevent at least a portion of light from the plurality of light-emitting diodes from reaching the plurality of photodiodes without first reaching the tissue; and***

*See* Ground 1A, [1.6].

***[20.8] a processor configured to receive and process the outputted at least one signal and determine a physiological parameter of the user responsive to the outputted at least one signal; and***

*See* Ground 1A, [1.7].

***[20.9] a processing device configured to wirelessly receive physiological parameter data from the physiological monitoring device, wherein the processing device comprises a user interface, a storage device, and a network interface configured to wirelessly communicate with the physiological monitoring device, and wherein the user interface includes a touch-screen display configured to present visual feedback responsive to the physiological parameter data.***

As previously discussed (*see* Ground 1A, [15.10], *supra*), in the combination, Ackermans describes that the sensor 10 includes "wireless technology for ***transmitting the measured physiological parameters to a monitor station***." APPLE-1011, 10:24-25; APPLE-1003, [82].

Also in the combination, Venkatraman discloses a wrist-worn wearable



**MASIMO 2033**
**Apple v. Masimo**
**IPR2024-00242**

physiological device and transmitting information wirelessly from that device to a secondary device such as a smartphone. APPLE-1006, 31:1-16, 57:20-53; APPLE-1003, [83]. Venkatraman also discloses that such a configuration allows the secondary device to act as a user interface for the wrist-worn wearable physiological device. APPLE-1006, 57:42-44; APPLE-1003, [83]. Venkatraman further discloses that the secondary device (*i.e.*, smartphone) can show various metrics regarding the user's health, and receive inputs through a touch-screen display. APPLE-1006, 37:41-63, 55:29-51, 57:20-58:9; APPLE-1003, [83].

#### (b) Claim 27

***[27.0] The system of claim 20, wherein at least one of the plurality of light-emitting diodes is configured to emit light of a first wavelength and at least one of the plurality of light-emitting diodes is configured to emit light of a second wavelength, the second wavelength being different than the first wavelength.***

In the combination, Ackermans describes that a "typical application of the … optical medical sensor 10" is "the measurement of the oxygenation level of blood in a pulse oximeter," where the plurality of light emitting diodes are configured to "***emit[] light at two different wavelengths***, usually around 660 nm and 940nm." APPLE-1011, 6:15-18; APPLE-1003, [84].

### C. Ground 2A: Claims 1, 9, 15, 18, 20, and 27 are obvious over Mendelson-799 in view of Haar, Venkatraman, and Savant

#### 1. Overview of Mendelson-799

Mendelson-799 describes a reflectance pulse oximetry sensor and corresponding control circuitry to measure and "compute the [blood] oxygen



MASIMO 2033
Apple v. Masimo
IPR2024-00242

saturation value, which is then presented on the display" to a user." APPLE-1008, Abstract, 10:22-30. In more detail, Mendelson-799's FIG. 8 (reproduced below) "illustrates a block-diagram of a pulse oximeter 20 utilizing … sensor 10." *Id.*, 8:39-40, 10:16-17.

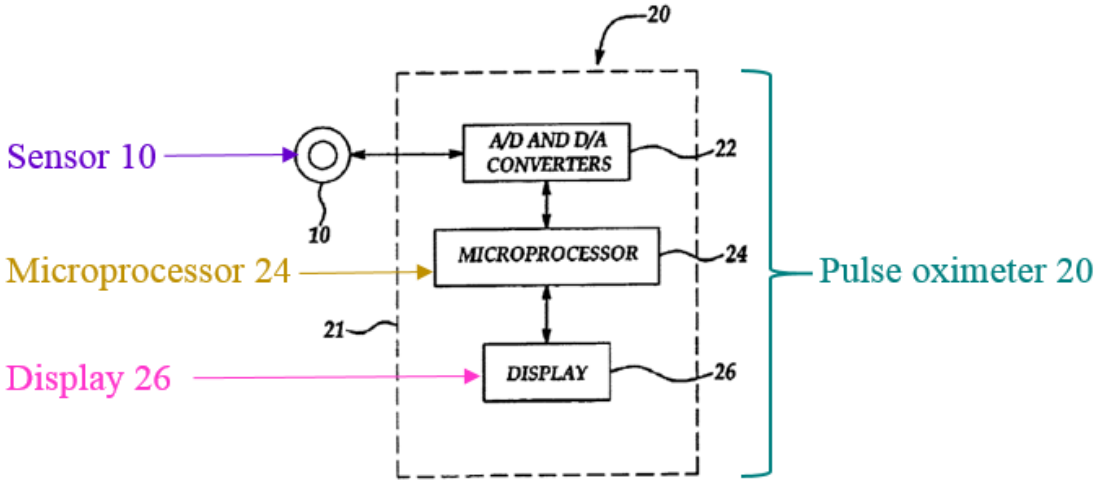


APPLE-1008, Detail of FIG. 8 (annotated).

As shown, "[t]he pulse oximeter typically includes a control unit 21, which is composed of an electronic block 22 including A/D and D/A converters connectable to the sensor 10, a microprocessor 24 for analyzing measured data, and a display 26 for presenting measurement results." *Id.*, 10:16-22. "The measured data (i.e., electrical output of the sensor 10 indicative of the detected light) is directly processed in the block 22, and the converted signal is further processed by the microprocessor 24," which "is operated by a suitable software model for analyzing the measured data and utilizing reference data (i.e., calibration curve stored in a memory) to compute the oxygen saturation value, which is then

presented on the display 26." *Id.*, 10:22-30.

Mendelson-799's FIG. 7 (reproduced below) illustrates the configuration of the optical sensor 10. *Id.*, 8:37-39.

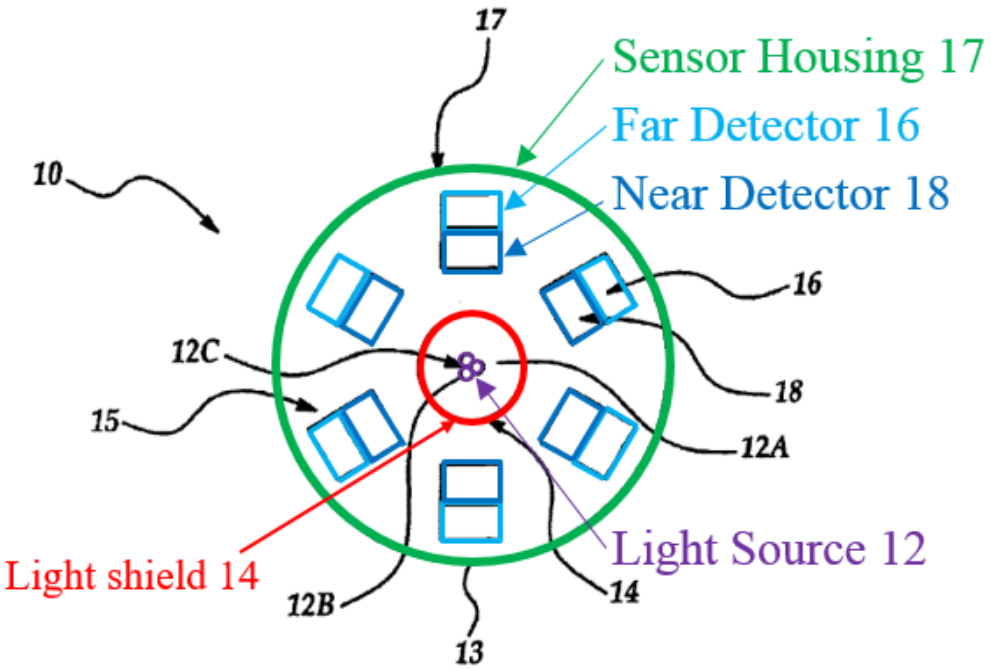


APPLE-1008, Detail of FIG. 7 (annotated).

The optical sensor 10 includes "a light source 12 composed of three closely spaced light emitting elements (e.g., LEDs or laser sources) 12*a*, 12*b* and 12*c* generating light of three different wavelengths," "***an array of discrete detectors*** (e.g., photodiodes)," including "a 'far' detector 16 and a 'near' detector 18, ***arranged in two concentric ring-like arrangements … surrounding the light emitting elements; and a light shield 14***."[4] *Id.*, 9:22-33. "All these elements are

[4] All emphasis added unless otherwise indicated.



MASIMO 2033
Apple v. Masimo
IPR2024-00242

accommodated in a sensor housing 17," with "[t]he light shield 14 [being] positioned between the photodiodes and the light emitting elements" so as to "prevent[] direct optical coupling between them, thereby maximizing the fraction of backscattered light passing through the arterially perfused vascular tissue in the detected light." *Id.*, 9:33-40. "This arrangement allows for measuring $SaO_2$ from multiple convenient locations on the body (e.g., the head, torso, or upper limbs), where convenient transmission mode measurements are not feasible." *Id.*, 2:14-28; *see also Id.*, 3:19-28 ("measurements are made from sensors attached to the forehead, chest, or the buttock area"), 3:35-44, 4:29-32 ("forehead, ***forearm*** and the calf on humans").

In sum, Mendelson-799 depicts and describes a physiological measurement and monitoring device configured to measure blood oxygen saturation of a user at an external a tissue measurement site. *Id.*, Abstract ("The sensor includes sensor housing, a source of radiation coupled to the housing, and a detector assembly coupled to the housing … the detector assembly is adapted to detect reflected radiation at least one predetermined frequency and to generate respective signals … used to determine the parameter of the blood"), 7:25-8:13 ("There is thus provided ... a sensor for use in an optical measurement device for non-invasive measurements of blood parameters"), 2:14-28 ("This arrangement allows for measuring $SaO_2$ from multiple convenient locations on the body (e.g., the head,



**MASIMO 2033**
**Apple v. Masimo**
**IPR2024-00242**

torso, or upper limbs), where convenient transmission mode measurements are not feasible"), 8:37-41, 9:22-40, 10:16-30, FIGS. 7, 8; APPLE-1003, [89].

### 2. Overview of Haar

Haar describes a physiological measuring device that includes "contact surface module" that contacts the user's skin when a measurement is performed. APPLE-1015, 6:1-3. The module is composed of "an optical fiber plate 16 is sandwiched between two masks 40, 41" consisting of "black ink which is applied by screen-printing." APPLE-1015, 6:4-10. Haar describes that the black masks are applied "in order to absorb light components which leave the sample surface between the irradiation and detection sites." *Id.*, 6:25-27. FIG. 6 from Haar shows the black mask 40 in the context of Haar's device. APPLE-1003, [90]:



**MASIMO 2033**
**Apple v. Masimo**
**IPR2024-00242**

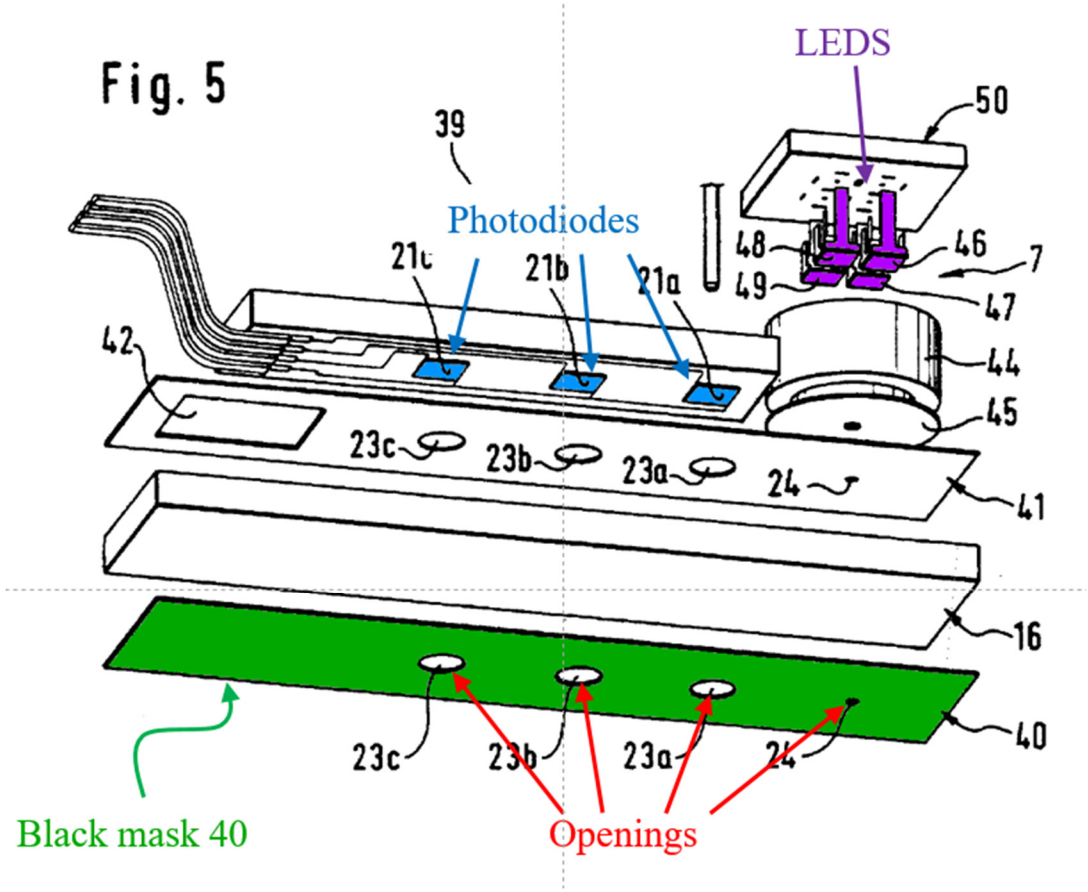


APPLE-1015, FIG. 5 (annotated)

### 3. The combination of Mendelson-799, Haar, Venkatraman, and Savant

In the combination, the physiological monitoring device of Mendelson-799 is modified to include a dark-colored coating with openings to allow light to pass from its light-emitting devices and to its photodiodes, as taught by Haar. *See, e.g.,* APPLE-1015, 6:1-27, FIG. 5; APPLE-1008, 9:22-40, FIG. 7; APPLE-1003, [91]. The physiological monitoring device of Mendelson-799 is further modified, based on Venkatraman, to enable the device to be worn on a user's wrist, and to enable the device to wirelessly communicate physiological measurements to a separate

device (*e.g.*, a smartphone). APPLE-1006, 12:16-21, 14:28-36, 15:19-26, FIGS. 6A, 6B, 7, 37:29-33; APPLE-1008, 9:22-40, FIG. 7; APPLE-1003, [91]. In addition, the physiological monitoring device of Mendelson-799 is modified to include a light-shaping diffuser, such as that described in Savant, between the plurality of light-emitting diodes and tissue on a wrist of a user. APPLE-1012, 1:16-51, 6:16-17; APPLE-1008, 9:22-40, FIG. 7; APPLE-1003, [91].

#### 4. Reasons to combine Mendelson-799, Haar, Venkatraman, and Savant

*Modifying the physiological monitoring device of Mendelson-799 to include a dark-colored coating, as taught by Haar*

A POSITA would have found it obvious and been motivated to modify the physiological monitoring device of Mendelson-799 to include a dark-colored coating with openings to allow light to pass from its light-emitting devices and to its photodiodes, as taught by Haar. *See, e.g.*, APPLE-1015, 6:1-27, FIG. 5; APPLE-1008, 9:22-40, FIG. 7; APPLE-1003, [92]. Haar teaches that such a dark-colored coating is applied "in order to absorb light components which leave the sample surface between the irradiation and detection sites," thereby "minimizing any remaining optical cross-talk" (*i.e.*, light emitted by the LEDs that passes to the photodiodes without passing through the tissue measurement site). APPLE-1015, 6:22-27, 8:24-25; APPLE-1003, [92]. Mendelson-799 recognizes the importance of minimizing "direct optical coupling" (*i.e.*, optical cross-talk) between the light



**MASIMO 2033**
**Apple v. Masimo**
**IPR2024-00242**

emitting diodes and photodiodes in its device, and thus a POSITA would have been motivated to perform this modification in order to further this goal of Mendelson-799. APPLE-1008, 9:36-40; APPLE-1015, 6:22-27, 8:24-25; APPLE-1003, [92].

Further, a POSITA would have found it obvious to modify Mendelson-799's device based on Haar's teachings because doing so entails the use of known solutions to improve similar systems and methods in the same way. APPLE-1003, [93]. Here, "when a patent 'simply arranges old elements with each performing the same function it had been known to perform' and yields no more than one would expect from such an arrangement, the combination is obvious." *KSR Int'l Co. v. Teleflex Inc*., 550 U.S. 398, 417 (2007). A POSITA would have recognized that applying Haar's teachings to improve Mendelson-799's device would have led to predictable results without significantly altering or hindering the functions performed by Mendelson-799's device. APPLE-1003, [93].

In fact, a POSITA would have been motivated to incorporate the well-known techniques of Haar into Mendelson-799 to achieve the predictable benefits described in Haar. APPLE-1003, [94]; *see, e.g.,* APPLE-1015, 6:22-27, 8:24-25; *see also* APPLE-1016, 1:5-10, 2:40-47, claim 1 (another example application of the well-known technique described in Haar). Indeed, a POSITA would have had a reasonable expectation of success incorporating Haar's teachings into



**MASIMO 2033**
**Apple v. Masimo**
**IPR2024-00242**

Mendelson-799, because Haar (and Anderson) teach devices operating in the proposed manner. APPLE-1003, [94]; *see, e.g.,* APPLE-1015, 6:22-27, 8:24-25; APPLE-1016, 1:5-10, 2:40-47, claim 1.

Accordingly, for at least these reasons, augmenting Mendelson-799's device based on the teachings of Haar would have been routine and straightforward to a POSITA, and it would have been clear that such a combination would predictably work and provide the expected results. APPLE-1003, [95].

*Modifying the device of Mendelson-799 to include a light-shaping diffuser, such as that described in Savant, between the plurality of light-emitting diodes and tissue on a wrist of a user*

A POSITA would have been motivated and found it obvious to modify Mendelson-799's physiological monitoring device (as previously modified based on Haar) to incorporate a light-shaping diffuser, such as those taught by Savant, between its emitters and the tissue measurement site in order to more precisely control the distribution of light from the emitters across the tissue measurement site. APPLE-1003, [96]. As described by Savant, a light-shaping diffuser provides precise control over the shape of the exiting light. APPLE-1012, 1:37-40 (a light-shaping diffuser "can be made to collect incoming light and either (1) distribute it over a circular area from a fraction of a degree to over 100°, or (2) send it into an almost unlimited range of elliptical angles"). Such precise control would allow Mendelson-799's device to be calibrated to increase the amount of reflected light



**MASIMO 2033**
**Apple v. Masimo**
**IPR2024-00242**

received by the photodiodes by precisely controlling the area of the tissue site being illuminated, thereby leading to more received light and a higher signal-to-noise ratio. APPLE-1008, 2:14-28, 10:16-30, 9:22-40, FIG. 7; APPLE-1012, 1:16-51, 6:16-17; APPLE-1003, [96]. Use of a light-shaping diffuser would also enable different spatial configurations of photodiodes to be utilized in the optical sensor by allowing the distribution of light to be modified based on the specific diffuser chosen. *See id.*

Further, a POSITA would have found it obvious to modify Mendelson-799 based on Savant's teachings because doing so entails the use of known solutions to improve similar systems and methods in the same way. APPLE-1003, [97]. Here, "when a patent 'simply arranges old elements with each performing the same function it had been known to perform' and yields no more than one would expect from such an arrangement, the combination is obvious." *KSR Int'l Co. v. Teleflex Inc.*, 550 U.S. 398, 417 (2007). A POSITA would have recognized that applying Savant's teachings to augment Mendelson-799 would have led to predictable results without significantly altering or hindering the functions performed by Mendelson-799's system. APPLE-1003, [97].

In fact, a POSITA would have been motivated to incorporate the well-known techniques of Savant into Mendelson-799 to achieve the predictable benefits described in Savant. APPLE-1003, [98]; *see, e.g.,* APPLE-1012, 1:16-51,



**MASIMO 2033**
**Apple v. Masimo**
**IPR2024-00242**

6:16-17. Indeed, a POSITA would have had a reasonable expectation of success incorporating Savant's teachings into Mendelson-799 , because Savant teaches that light-shaping diffusers are widely applicable to "almost any [light] source, including LEDs." *See* APPLE-1012, 1:49-51; APPLE-1003, [98].

Accordingly, for at least these reasons, augmenting Mendelson-799's device based on the teachings of Savant would have been routine and straightforward to a POSITA, and it would have been clear that such a combination would predictably work and provide the expected results. APPLE-1003, [99].

*Modifying Mendelson-799's device to be worn on the wrist and to wirelessly communicate physiological measurements to a separate device, based on Venkatraman*

It would have been obvious to a POSITA to modify the physiological monitoring device of Mendelson-799 (as previously modified based on Haar and Savant) based Venkatraman's teaching of a wrist-worn physiological sensor in the manner described above because doing so would have amounted to nothing more than the use of a known technique to improve similar devices in the same way and combining prior art elements according to known methods to yield predictable results. *See KSR v. Teleflex*, 550 U.S. 398, 417 (2007); APPLE-1003, [100]. Mendelson-799 and Venkatraman are both related to obtaining physiological parameters by emitting radiation (e.g., visible or infrared light) and detecting reflected radiation from human tissue. APPLE-1008, 2:14-28, 10:16-30, 9:22-40,



**MASIMO 2033**
**Apple v. Masimo**
**IPR2024-00242**

FIG. 7; APPLE-1006, 33:4-20, 36:38-37:40, FIGS. 3A, 3B. Implementing Mendelson-799's sensor to be wrist-worn like Venkatraman's biometric monitoring device would minimize discomfort and interference in daily activities caused by the sensor, "which a POSITA would have recognized as beneficial." APPLE-1003, [100]; APPLE-1006, 14:28-36. In addition, the POSITA would have understood that integrating Mendelson-799's sensor 10 and control unit 21 in a single, wrist-worn device, as taught by Venkatraman, results "in a simpler, less-cluttered configuration with fewer devices and external connections, which can be cumbersome to the user." APPLE-1003, [100]; APPLE-1006, 50:36-51:45; *see In re Larson*, 340 F.2d 965, 968 (CCPA 1965) (integrating known components into a single device is "merely a matter of obvious engineering choice"). In addition, a POSITA would have understood that by "integrating the components into a single device, issues with poorly connected wires between the sensors and processing units can be mitigated, and the components and connections between them can be protected within the housing of the wrist-worn device, thereby resulting in a device that is more robust and resistant to damage." APPLE-1003, [100]; *see, e.g.,* APPLE-1006, 50-36-51:61. For example, in the combination, components of Mendelson-799's pulse oximeter (e.g., processors, emitters, detectors, etc.) are implemented by electronic circuits on discrete chips or a packaged chip connected to or integrated with a PCB, as shown in Venkatraman's FIGS. 2C, 3A, and 3B.



**MASIMO 2033**
**Apple v. Masimo**
**IPR2024-00242**

APPLE-1003, [100]; APPLE-1006, 50:36-51:45, FIGS. 2C, 3A, 3B. Thus, a POSITA would have been motivated to perform the combination, for example, because the resulting Mendelson-799-Venkatraman wrist-worn optical sensor would (i) make it easier and more convenient for the user to monitor physiological data (e.g., heart rate, oxygen level) throughout the day, (ii) minimize clutter caused by multiple devices, and (iii) be more robust and resistant to damage. APPLE-1003, [100].

A POSITA would have had a reasonable expectation of success in implementing this combination at least because miniaturization techniques (like those employed to configure Mendelson-799's device to be wrist-worn) were well-known and widely utilized in the art during the relevant timeframe. APPLE-1003, [101] (noting the 11 year gap in the filing dates of Venkatraman and Mendelson-799 during which the size of circuits decreased significantly and the industry followed the trend set by Moore's law which indicates at least 10x greater density). In fact, Venkatraman itself teaches a wrist-worn device that incorporates emitters, detectors, and processors in configurations similar to the proposed combination. APPLE-1006, 50:36-51:61; APPLE-1003, [101].

In addition, a POSITA would have been motivated to wirelessly connect the physiological monitoring device of Mendelson-799 (as previously modified based on Haar and Savant) to a secondary processing device, such as a smartphone,



**MASIMO 2033**
**Apple v. Masimo**
**IPR2024-00242**

having a user interface with a touch screen display, as taught by Venkatraman, in order to increase the functionality of the system without significantly increasing the power consumption of Mendelson-799's sensor. APPLE-1003, [102]; *see, e.g.,* APPLE-1011, 10:23-27; APPLE-1006, 37:41-63, 55:29-51, 57:20-58:9. For example, a POSITA would understand that it is important for wearable sensors, such as that described in Mendelson-799, to avoid "power-consuming" features, such as large amounts of data processing or elaborate graphical displays, because such added features may necessitate "a power supply unit with a sufficient battery capacity and an according heavy weight." APPLE-1011, 10:23-27; APPLE-1003, [102]. By wirelessly "transmitting … measured physiological parameters to a monitor station," such as the smartphone taught by Venkatraman, additional features can be realized, such as the calculation additional metrics regarding the user's health, without the need to increase the battery capacity, and therefore weight, of Mendelson-799's sensor. APPLE-1003, [102]; *see, e.g.,* APPLE-1011, 10:23-27; APPLE-1006, 37:41-63, 55:29-51, 57:20-58:9.

Further, a POSITA would have found it obvious to modify Mendelson-799 based on Venkatraman because doing so entails the use of known solutions to improve similar systems and methods in the same way. Here, "when a patent 'simply arranges old elements with each performing the same function it had been known to perform' and yields no more than one would expect from such an



**MASIMO 2033**
**Apple v. Masimo**
**IPR2024-00242**

arrangement, the combination is obvious." *KSR Int'l Co. v. Teleflex Inc.,* 550 U.S. 398, 417 (2007). A POSITA would have recognized that applying Venkatraman's teachings of transmitting physiological parameters wirelessly to a smartphone to Mendelson-799's system would have led to the predictable result, taught by Venkatraman, of a smartphone displaying information based on the received physiological parameters. APPLE-1008, 10:23-27; APPLE-1006, 37:41-63, 55:29-51, 57:20-58:9; APPLE-1003, [103].

Accordingly, for at least these reasons, a POSITA would have been motivated and found it obvious to implement the combination of Mendelson-799 and Venkatraman as described above. APPLE-1003, [104]. Such a modification would have been routine and straightforward to a POSITA, and it would have been clear that such a combination would predictably work and provide the expected functionality, because Venkatraman describes a physiological monitoring device that operated in the proposed manner. APPLE-1003, [104-[106]]; *see, e.g.,* APPLE-1006, 37:41-63, 55:29-51, 57:20-58:9.

### 5. Analysis

#### (a) Claim 1

***[1.0] A physiological monitoring device comprising:***

In the combination, Mendelson-799 describes a pulse oximeter device that uses a sensor placed on user tissue to obtain physiological measurements of the user. APPLE-1008, 10:15-30 ("FIG. 8 illustrates a block diagram of a pulse

oximeter 20 utilizing ... sensor 10"); Abstract ("sensor for use in an optical measurement device and a method for non-invasive measurement of a blood parameter"); 5:49-59, 8:37-41, 9:22-40 ("Referring to FIG. 7, there is illustrated an optical sensor 10 … aimed at minimizing some of the measurement inaccuracies in a reflectance pulse oximeter"); APPLE-1003, [107]. The sensor is configured for placement on a user at a tissue measurement site and includes a "sensor housing, a source of radiation coupled to the housing, and a detector assembly coupled to the housing[.]" APPLE-1008, Abstract. "[T]he detector assembly is adapted to detect reflected radiation at least one predetermined frequency and to generate respective signals … used to determine the parameter of the blood." *Id*. This "reflection mode…arrangement allows for measuring $SaO_2$ [oxygen saturation]from multiple convenient locations on the body (e.g., the head, torso, or upper limbs), where convenient transmission mode measurements are not feasible." APPLE-1008, 2:14-21, 10:16-30, FIGS. 7, 8; APPLE-1003, [107].

***[1.1] a plurality of light-emitting diodes configured to emit light in a first shape;***

In the combination, Mendelson-799 describes a noninvasive optical physiological sensor that includes "a light source 12 composed of three closely spaced light emitting elements (e.g., LEDs or laser sources) 12*a*, 12*b* and 12*c* generating light of three different wavelengths, respectively …." APPLE-1008, Abstract, 2:65-3:15, 7:25-8:13, 8:37-41, 9:22-40, 10:16-30, FIGS. 7, 8; APPLE-



**MASIMO 2033**
**Apple v. Masimo**
**IPR2024-00242**

1003, [108].

In more detail, the light emitting elements 12*a*, 12*b*, and 12*c* illustrated in Mendelson-799's FIG. 7 (reproduced below) are "adapted to emit radiation at predetermined frequencies" onto the tissue measurement site, and the "detector assembly is adapted to detect reflected radiation … and to generate respective signals" that "are used to determine the parameter of the blood." *Id.*, Abstract, 9:22-40, FIG. 7; *see also* APPLE-1008, 7:25-47, 9:42-10:15 (noting that "[t]he actual numbers of wavelengths used as a light source and the number of photodetectors in each ring are not limited and depend only on the electronic circuitry inside the oximeter"); APPLE-1003, [109]. The depicted arrangement features a light shield 14 "positioned between the photodiodes and the light emitting elements" to "prevent[] direct optical coupling between them, thereby maximizing the fraction of backscattered light passing through the arterially perfused vascular tissue in the detected light." APPLE-1008, 9:33-40.



**MASIMO 2033**
**Apple v. Masimo**
**IPR2024-00242**

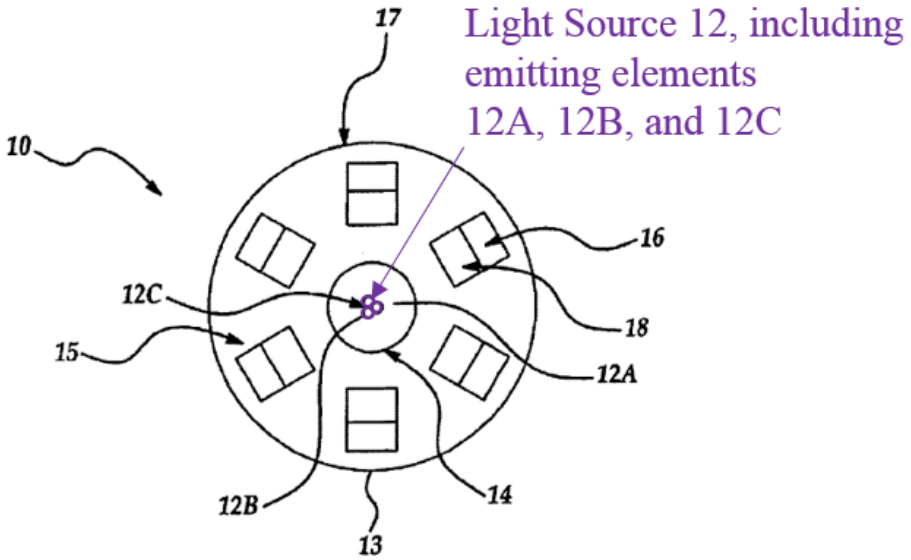


APPLE-1008, Detail of FIG. 7 (annotated)

***[1.2] a material configured to be positioned between the plurality of light-emitting diodes and tissue on a wrist of a user when the physiological monitoring device is in use, the material configured to change the first shape into a second shape by which the light emitted from one or more of the plurality of light-emitting diodes is projected towards the tissue;***

In the combination, Venkatraman teaches a "biometric monitoring device[] ... adapted to be worn or carried on the body of a user ... including [an] optical heart rate monitor" designed to "be a wrist-worn or arm-mounted accessory such as a watch or bracelet" APPLE-1006, 37:29-33. As previously discussed (*see* Sections IV.C.4-5, *supra*), it would have been obvious to a POSITA to combine Mendelson-799 with Venkatraman such that the tissue measurement site would be located on a wrist of the user. APPLE-1006, 12:16-21, 14:28-36, 15:19-26, FIGS. 6A, 6B, 7; APPLE-1003, [110].



**MASIMO 2033**
**Apple v. Masimo**
**IPR2024-00242**

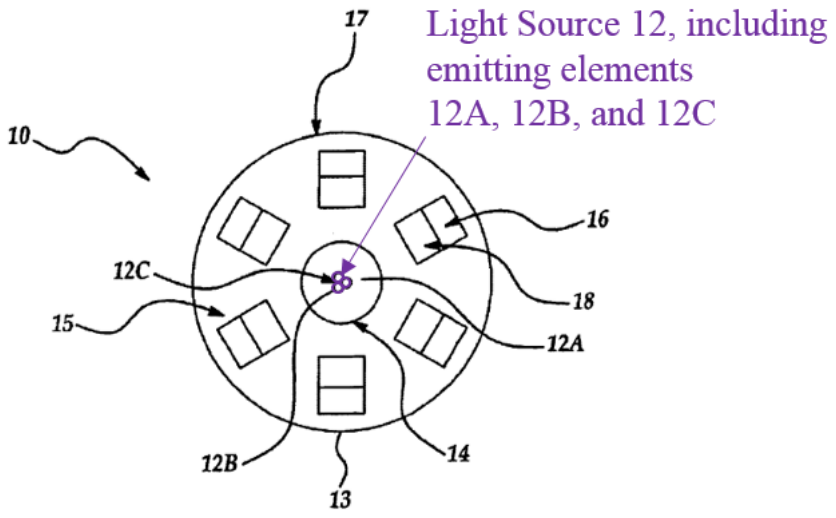


APPLE-1008, Detail of FIG. 7 (annotated).

Also in the combination, Mendelson-799 teaches that its light emitting elements (e.g., LEDs) 12a, 12b, 12c (*see* FIG. 7 above) generate light of three different wavelengths. APPLE-1008, 9:22-40; APPLE-1003, [111]. In Mendelson-799, "two measurement sessions typically [are] carried out in pulse oximetry based on measurements with two wavelengths centered around the peak emission values of 660 nm (red spectrum) and 940 nmi-20 nm (IR spectrum), [and] one additional measurement session is carried out with an additional wavelength." APPLE-1008, 6:44-50; *see also* 6:50-58 ("In a preferred embodiment the use of at least three wavelengths enables the calculation of an at least one additional ratio formed by the combination of the two IR wavelengths"), 7:4-24, 7:42-46, 8:1-5, 9: 4 ("dual-wavelength reflection type pulse oximeter"), 9:40-47 ("more than three wavelengths can be utilized in the sensor"), 9:62-67.

Also in the combination, Savant describes a "***light shaping diffuser*** (LSD)" which "is a type of diffuser used in a variety of illuminating, imaging, and light projecting applications." APPLE-1012, 1:16-19. Savant describes that "LSDs can be used to ***shape a light beam*** so that over 90% (and up to 95%-98%) of the light beam entering the LSD is directed towards and into contact with a target located downstream of the LSD." *Id*., 1:34-37. "A LSD can be made to collect incoming light and either (1) distribute it over a circular area from a fraction of a degree to over 100°, or (2) send it into an almost unlimited range of elliptical angles." *Id*., 1:37-40. Savant describes that LSDs "exhibit a high degree of versatility because they ***may be employed with light from almost any source, including LEDs, daylight***, a tungsten halogen lamp, or an arc lamp." *Id*., 1:49-51. LSD's can also be used to "control the angular spread of transmitted light." *Id*., 6:16-17; APPLE-1003, [112].

As previously discussed, a POSITA would have been motivated to implement a light-shaping diffuser, such as that described in Savant, in the sensor of Mendelson-799 between the plurality of light-emitting diodes and tissue on a wrist of a user. *See* Section IV.C.2-3, *supra*; APPLE-1003, [113].

***[1.3] a plurality of photodiodes configured to detect at least a portion of the light after the at least the portion of the light passes through the tissue, the plurality of photodiodes further configured to output at least one signal responsive to the detected light;***

In the combination, Mendelson-799 depicts and describes a noninvasive



**MASIMO 2033**
**Apple v. Masimo**
**IPR2024-00242**

optical sensor that includes "an array of discrete detectors (e.g., photodiodes)," including "a 'far' detector 16 and a 'near' detector 18, arranged in two concentric ring-like arrangements … surrounding "light emitting elements …." APPLE-1008, Abstract, 7:25-8:13, 8:37-41, 9:22-10:30, FIGS. 7, 8; APPLE-1003, [114]. The arrangement of a pair of detectors in different portions of the two concentric ring-like arrangements results in twelve detectors being used in Mendelson-799's device, as shown in FIG. 7 below. APPLE-1003, [114].

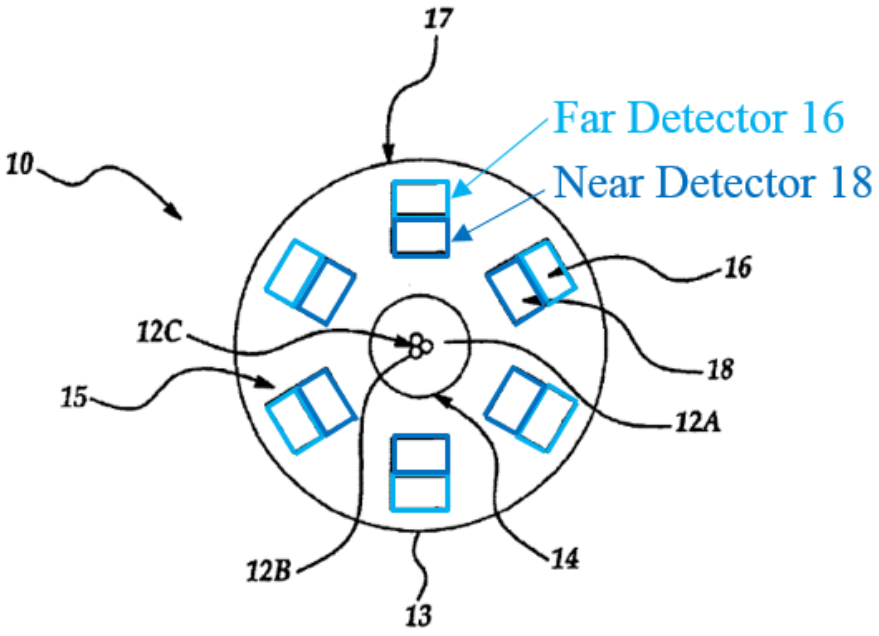


APPLE-1008, Detail of FIG. 7 (annotated).

In more detail, each of the discrete photodiodes included in the detector assembly illustrated in Mendelson-799's FIG. 7 are "adapted to detect reflected radiation … and to generate respective signals" that "are used to determine the parameter of the blood." APPLE-1008, Abstract, 9:22-40, FIG. 7; APPLE-1003,



MASIMO 2033
Apple v. Masimo
IPR2024-00242

[115]. In the depicted embodiment, the "array of discrete detectors (e.g., photodiodes)" includes "two concentric ring-like arrangements": "a 'far' detector 16 and a 'near' detector 18." APPLE-1008, Abstract, 9:29-33, FIG. 7; APPLE-1003, [115]. The far detector 16 and near detector 18 together include twelve discrete photodiodes, although a POSITA would have understood that "[t]he actual … number of photodetectors in each ring [is] not limited and depend[s] only on the electronic circuitry inside the oximeter." APPLE-1008, 9:42-48; APPLE-1003, [115].

In the combination, Mendelson-799 teaches that the "invention provides a sensor for use in a reflection-mode or backscatter type pulse oximeter" such as that "illustrated in FIG. 3." APPLE-1008, 8:55-59. Mendelson-799 explains further that traditional "reflection-mode or backscatter type pulse oximetry" sensors of the type "shown in FIG. 3" feature "LEDs and [a] photodetector [that] are both mounted side-by-side next to each other on the same planar substrate," which "allows for measuring $SaO_2$ from multiple convenient locations on the body (e.g. the head, torso, or upper limbs), where conventional transmission-mode measurements are not feasible." APPLE-1008, 2:14-28. From this description, a POSITA would have understood that Mendelson-799 teaches this limitation. *Id.*, Abstract ("The detector assembly is adapted to detect reflected radiation"), 7:25-8:13, 8:37-41, 9:22-10:30 ("the far detector 16 and near detector 18 together

include twelve discrete photodiodes"), FIGS. 3, 7, 8; APPLE-1003, [116].

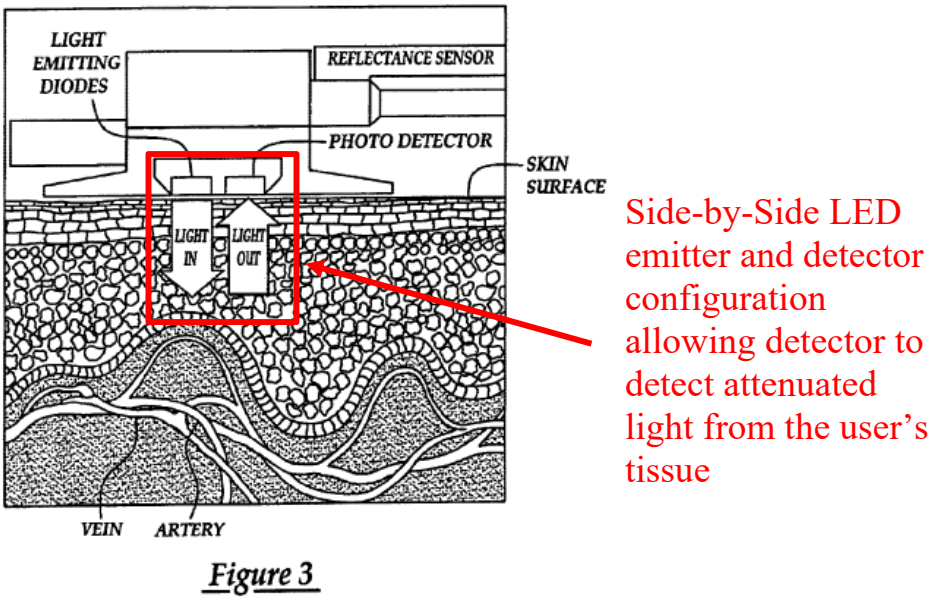


APPLE-1008, FIG. 3 (annotated).

***[1.4] a surface comprising a dark-colored coating, the surface configured to be positioned between the plurality of photodiodes and the tissue when the physiological monitoring device is in use,***

In the combination, Haar describes a physiological measuring device that includes "contact surface module" that contacts the user's skin when a measurement is performed. APPLE-1015, 6:1-3; APPLE-1003, [119]. The module is composed of "an optical fiber plate 16 is sandwiched between ***two masks 40, 41***" consisting of "***black ink*** which is applied by screen-printing." APPLE-1015, 6:4-10. Haar describes that the black masks are applied "***in order to absorb light components*** which leave the sample surface between the irradiation and detection sites." *Id.*, 6:25-27. FIG. 6 from Haar shows the black mask 40 in the context of Haar's device:

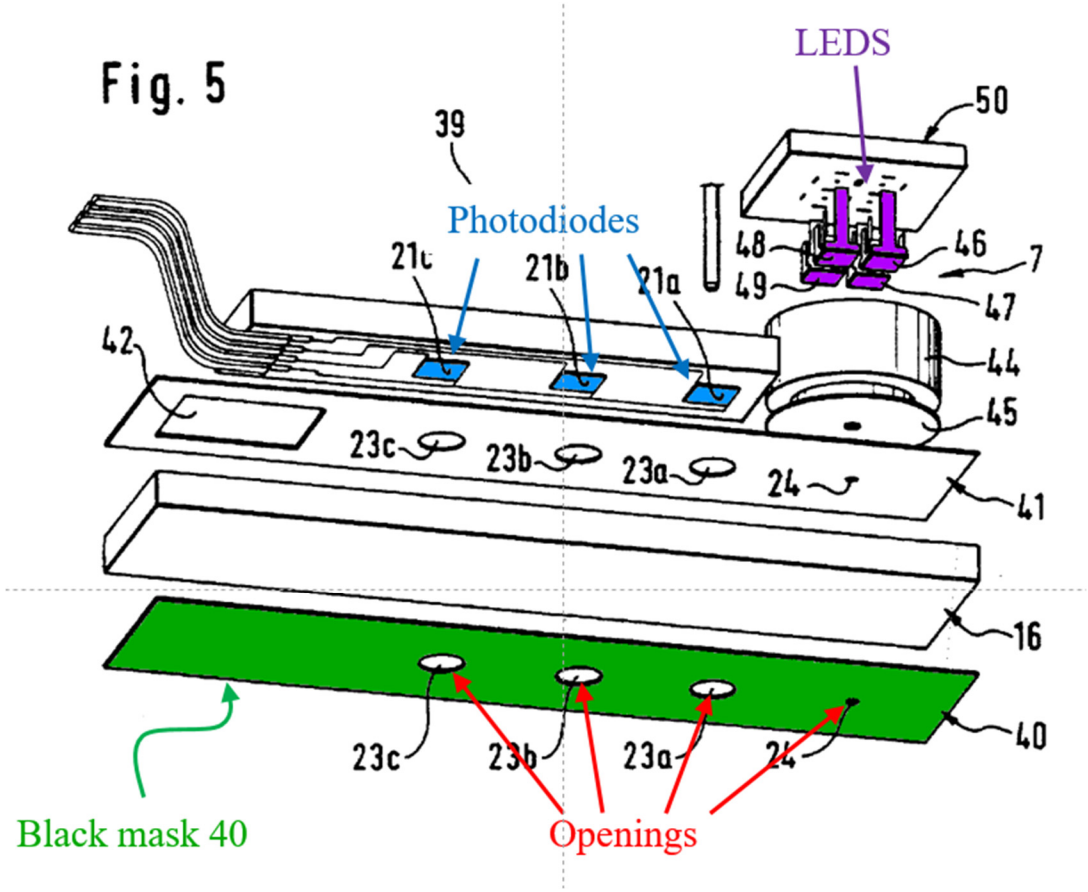


APPLE-1015, FIG. 5 (annotated)

As previously discussed (*see* Sections IV.C.2-3, *supra*), a POSITA would have found it obvious and been motivated to incorporate the black mask 40 (a dark colored coating) into the physiological monitoring device of Mendelson-799. *See also* APPLE-1016, 1:5-10, 2:40-47, claim 1.

***[1.5] wherein an opening defined in the dark-colored coating is configured to allow at least a portion of light reflected from the tissue to pass through the surface;***

In the combination, Haar describes that the black mask 40 (the dark-colored coating, *see* [1.4], *supra*) "includes ***transparent partial areas*** 23a, 23b. 23c"

(openings) "for detectors 21a. 21b. 21c, and a ***transparent partial area*** 24" (opening) "for the irradiation of light" from the LEDs 46-49. APPLE-1015, 6:1-9' APPLE-1003, [121].

***[1.6] a light block configured to prevent at least a portion of the light emitted from the plurality of light-emitting diodes from reaching the plurality of photodiodes without first reaching the tissue; and***

As explained above with respect to [1.0] and [1.3], in the combination, Mendelson-799 states that a "***light shield 14 is positioned between the photodiodes and the light emitting elements, and prevents direct optical coupling between them***, thereby maximizing the fraction of backscattered light passing through the arterially perfused vascular tissue in the detected light." APPLE-1008, 9:33-40; APPLE-1003, [122].

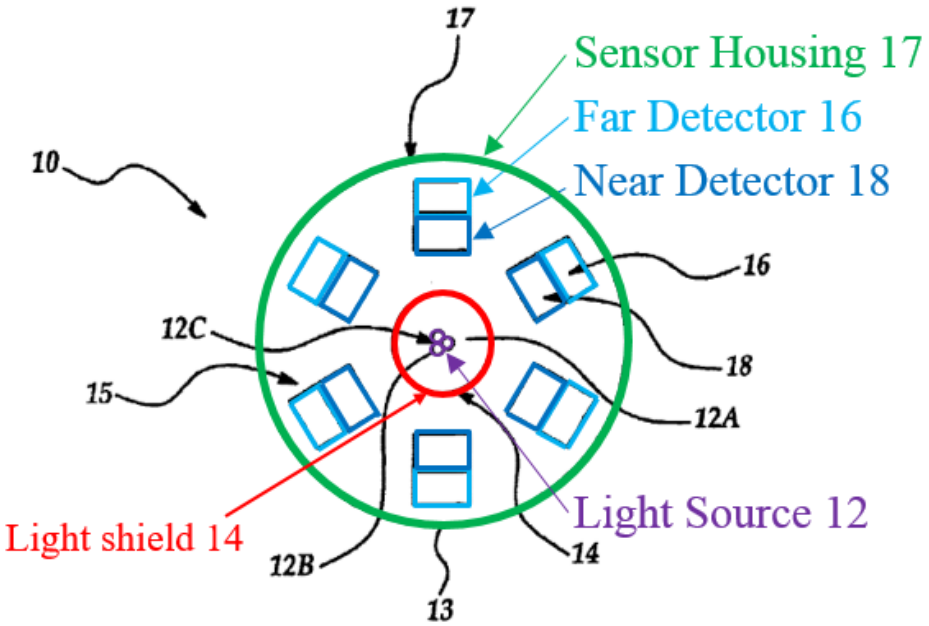




MASIMO 2033
Apple v. Masimo
IPR2024-00242

APPLE-1008, Detail of FIG. 7 (annotated).

A POSITA would have understood that the light shield 14 forms a wall enclosing the LEDs 12a, 12b, 12c of the light source 12. APPLE-1003, [125]. The wall or light shield 14 is formed between the light emission source and the plurality of detectors. APPLE-1008, 9:33-40.

***[1.7] a processor configured to receive and process the outputted at least one signal and determine a physiological parameter of the user responsive to the outputted at least one signal.***

In the combination, Mendelson-799 teaches a microprocessor 24 configured to receive the signal responsive to the output and to analyze the signal.[5] APPLE-1008, 10:17-25, FIG. 8. In particular, Mendelson-799 reveals that "[t]he microprocessor 24 is operated by a suitable software model for analyzing the measured data and utilizing reference data (i.e., calibration curve stored in a memory) ***to compute the oxygen saturation value***, which is then presented on the display 26." *Id.*, 10:25-37. The oxygen saturation value is "a physiological

[5] It is notable that the claims do not require a direct communication of sensor output signals to the processor. In fact, the '745 Patent includes intervening circuitry between the output of sensor 807 and signal processor 810, e.g., "front-end interface 808" which can include an analog-to-digital converter. APPLE-1001, FIG. 8, 12:61-13: 58; APPLE-1003, [126].



**MASIMO 2033**
**Apple v. Masimo**
**IPR2024-00242**

parameter of the user." *Id.*, 1:15-20, 3:15-53; APPLE-1006, 17:1-38, 33:14-20; APPLE-1003, [126].

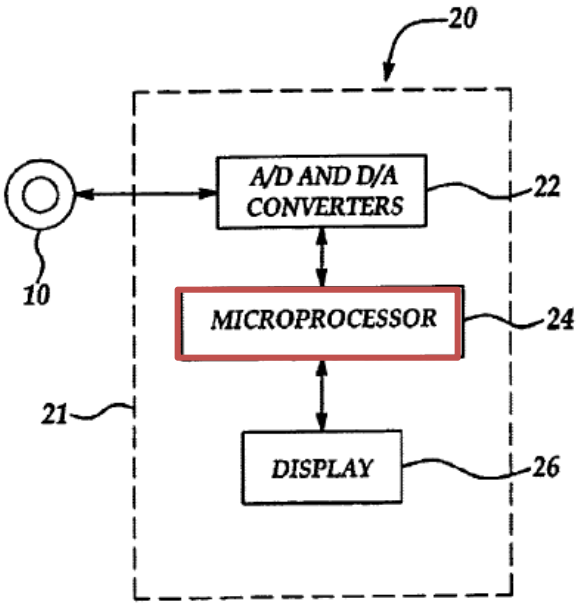


Figure 8

APPLE-1008, FIG. 8 (annotated).

In the combination, Venkatraman also teaches control logic that includes one or more processors to process data acquired from the sensors. APPLE-1006, 2:66-4:7, 50:35-51:38. Examples of control logic architecture are shown in FIGS. 11A-G, 12A-C, 13 A-B, and 14A-D. In Venkatraman, various embodiments of the control logic architecture include one or more processors directly receiving data from the sensors. APPLE-1006, 6:51-60; APPLE-1003, [127].



MASIMO 2033
Apple v. Masimo
IPR2024-00242

### (b) Claim 9

***[9.0] The physiological monitoring device of claim 1, wherein the physiological parameter comprises oxygen saturation.***

Mendelson-799's FIG. 8 illustrates a pulse oximeter 20 that includes a microprocessor 24 for analyzing measured data and a display 26 for presenting measurement results." *Id.*, 10:16-22. In particular, Mendelson-799 states that "[t]he measured data (i.e., electrical output of the sensor 10 indicative of the detected light) is directly processed in the block 22, and the converted signal is further processed by the microprocessor 24. The microprocessor 24 is operated by a suitable software model for analyzing the measured data and utilizing reference data (i.e., calibration curve stored in a memory) ***to compute the oxygen saturation value***, which is then presented on the display 26." APPLE-1008, 10:22-30; *see also* FIG. 10C (accept point and update display step), 13:52-61; APPLE-1003, [128].

### (c) Claim 15

***[15.0] A physiological monitoring device comprising:***

*See* [1.0].

***[15.1] a plurality of light-emitting diodes configured to emit light proximate a wrist of a user;***

As previously discussed (*see* 1.1], *supra*), in the combination, Mendelson-799 describes a physiological monitoring device that includes a plurality of light emitting diodes. As also previously discussed, in the combination, Venkatraman



**MASIMO 2033**
**Apple v. Masimo**
**IPR2024-00242**

teaches a "biometric monitoring device[] ... adapted to be worn or carried on the body of a user ... including [an] optical heart rate monitor" designed to "be a wrist-worn or arm-mounted accessory such as a watch or bracelet" APPLE-1006, 37:29-33. And as previously discussed (*see* Sections IV.C.4-5, *supra*), it would have been obvious to a POSITA to combine Mendelson-799 with Venkatraman such that the tissue measurement site would be located on a wrist of the user. APPLE-1006, 12:16-21, 14:28-36, 15:19-26, FIGS. 6A, 6B, 7; APPLE-1003, [130].

***[15.2] a light diffusing material configured to be positioned between the plurality of light-emitting diodes and a tissue measurement site on the wrist of the user when the physiological monitoring device is in use;***

*See* [1.2].

***[15.3] a light block having a circular shape;***

As explained above with respect to [1.0] and [1.3], in the combination, Mendelson-799 states that a "***light shield 14 is positioned between the photodiodes and the light emitting elements, and prevents direct optical coupling between them***, thereby maximizing the fraction of backscattered light passing through the arterially perfused vascular tissue in the detected light." APPLE-1008, 9:33-40. As shown in FIG. 7 from Mendelson-799, the light shield 14 (annotated in red) has a circular shape. APPLE-1003, [132]:



**MASIMO 2033**
**Apple v. Masimo**
**IPR2024-00242**

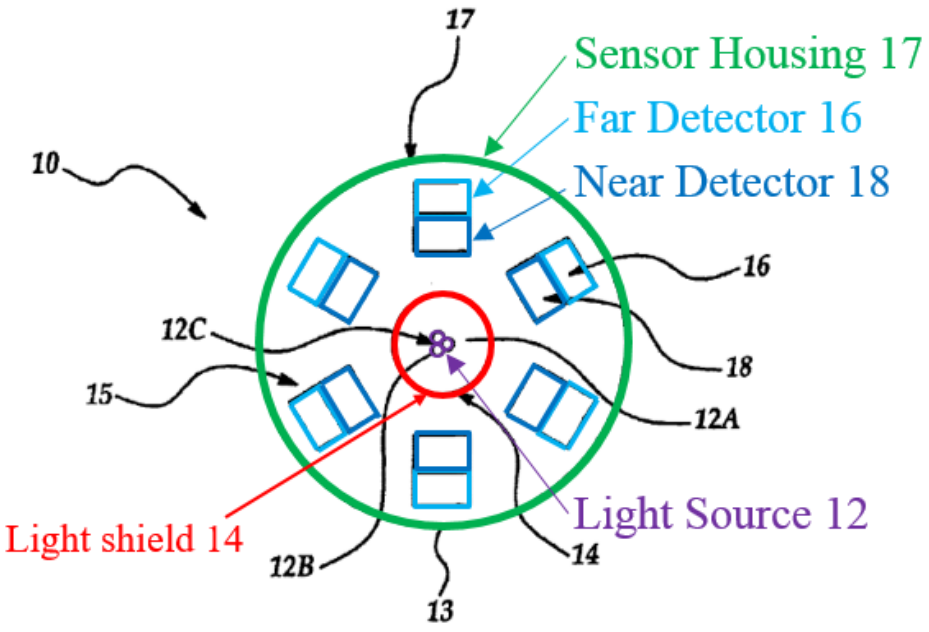


APPLE-1008, Detail of FIG. 7 (annotated).

A POSITA would have understood that the light shield 14 forms a wall enclosing the LEDs 12a, 12b, 12c of the light source 12. APPLE-1003, [133]. The wall or light shield 14 is formed between the light emission source and the plurality of detectors. APPLE-1008, 9:33-40.

***[15.4] a plurality of photodiodes configured to detect at least a portion of the light emitted from the plurality of light-emitting diodes after the light passes through the light diffusing material and a portion of the tissue measurement site encircled by the light block[6]***

As previously discussed (*see* [1.3], *supra*), in the combination, Mendelson-

[6] Petitioner does not concede that this limitation, or any other limitation of

799 describes a plurality of photodiodes configured to detect at least a portion of the light emitted by the light-emitting diodes after the at least the portion of the light passes through the tissue. Mendelson-799 further teaches a "light shield 14" (light block, *see* [15.3], *supra*) that encircles the light-emitting diodes 12, as shown in FIG. 7. APPLE-1003, [134]:

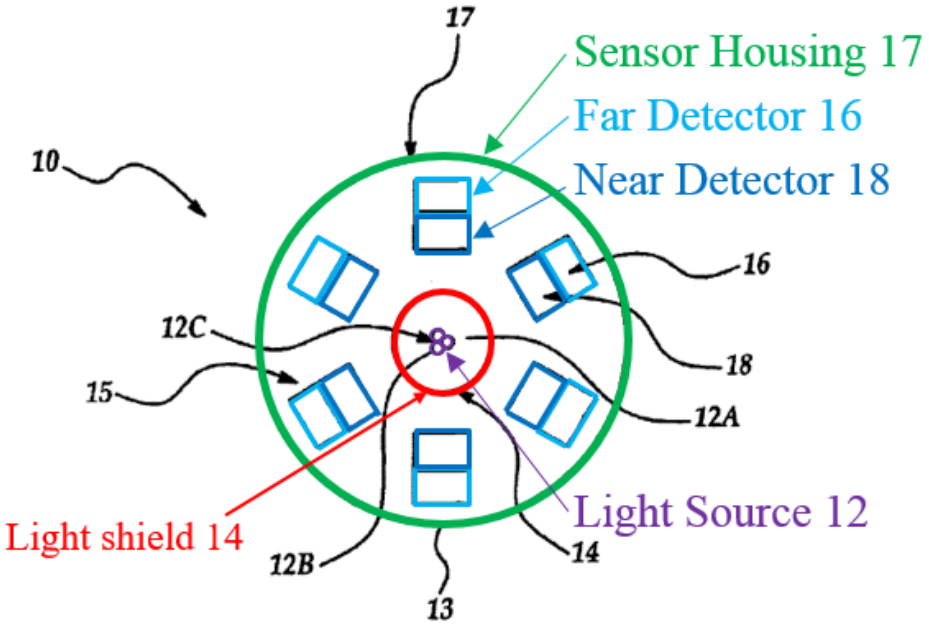


APPLE-1008, Detail of FIG. 7 (annotated).

A POSITA would have understood that the light shield 14 forms a light block encircling the LEDs 12a, 12b, 12c of the light source 12. APPLE-1003, [135].

---

'745 patent, is not indefinite, and reserves the right to argue indefiniteness in other proceedings where such arguments are permitted.

Because light from the LEDs 12a, 12b, and 12c can only reach the portion of the tissue measurement site encircled by the light shield 14, any light that reaches the plurality of photodiodes must have passed through that portion of the tissue measurement site. APPLE-1008, 9:33-40; APPLE-1003, [135].

***[15.5] wherein the plurality of photodiodes are arranged in an array having a spatial configuration corresponding to a shape of the portion of the tissue measurement site encircled by the light block***

As shown in FIG. 7 below, in the combination Mendelson-799 teaches "an array of discrete detectors (e.g., photodiodes)" including far detectors 16 and near detectors 18, arranged in two concentric ring-like arrangements … surrounding "light emitting elements …." APPLE-1008, Abstract, 7:25-8:13, 8:37-41, 9:22-10:30, FIGS. 7, 8; APPLE-1003, [136].

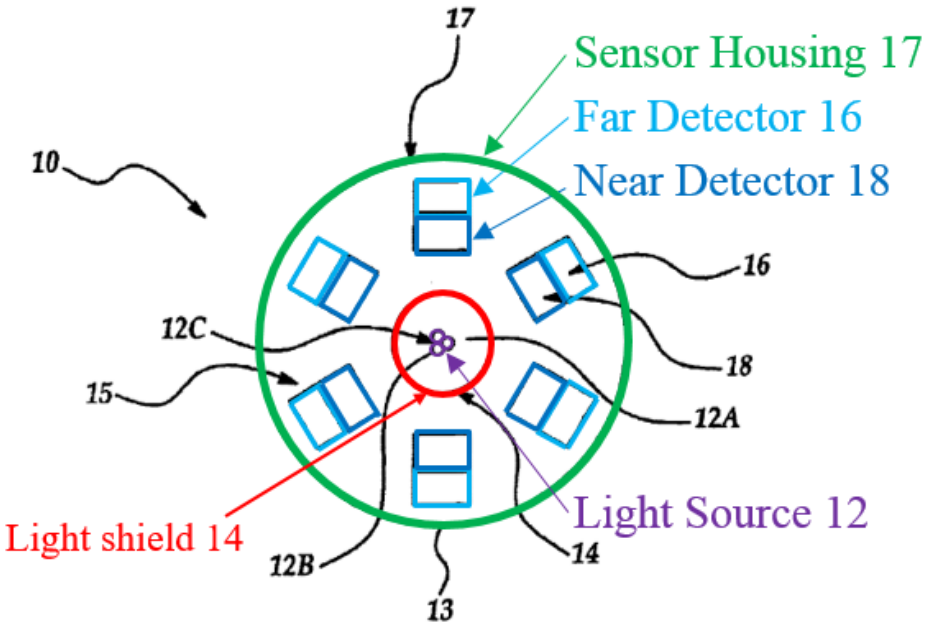




MASIMO 2033
Apple v. Masimo
IPR2024-00242

APPLE-1008, Detail of FIG. 7 (annotated)

As illustrated, the far detector 16 and near detector 18 together include twelve discrete photodiodes, although a POSITA would have understood that "[t]he actual … number of photodetectors in each ring [is] not limited and depend[s] only on the electronic circuitry inside the oximeter." *Id.*, 9:42-48; APPLE-1003, [137]. Furthermore, as explained in [1c], the light shield 14 effectively guides the light emitted by light source 12 on to the tissue measurement site such that the circular shape/area of the light shield 14 corresponds to a circular region of the tissue measurement site upon which light is emitted and subsequently attenuated prior to detection by photodetectors 14, 16. APPLE-1008, 12:2-5, 12:39-50, 9:35-40, 13:18-30; APPLE-1003, [137].

***[15.6] wherein the plurality of photodiodes are further configured to output at least one signal responsive to the detected light, and***

*See* [1.3].

***[15.7] wherein the plurality of light-emitting diodes and the plurality of photodiodes are arranged in a reflectance measurement configuration;***

In the combination, Mendelson-799 describes its FIG. 7 configuration as a "reflectance pulse oximeter." *Id.*, 9:22-40, 8:55-59 ("The invention provides a sensor for use in a reflection-mode or backscatter type pulse oximeter"). In particular, Mendelson-799 explains that its optical sensor 10 has detectors 16, 18 and light emitting elements (LEDs) on the same (first) side of the tissue measurement site in a "reflection-mode .. type pulse oximetry." APPLE-1008,



**MASIMO 2033**
**Apple v. Masimo**
**IPR2024-00242**

2:14-23; *see also* FIGS. 3, 4 (showing that in a reflection configuration the detectors and LEDs are on the same side of the tissue measurement site). Accordingly, when the combined pulse oximeter device is worn on the wrist, the emitting elements (LEDs) are arranged in a "reflection-mode" or "reflectance measurement configuration." APPLE-1003, [139].

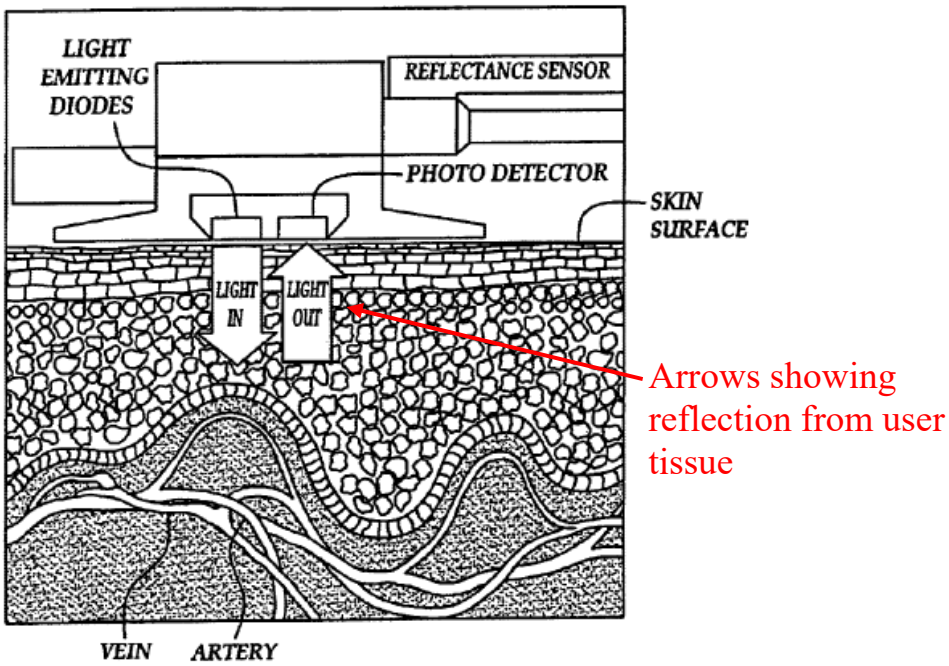


Figure 3

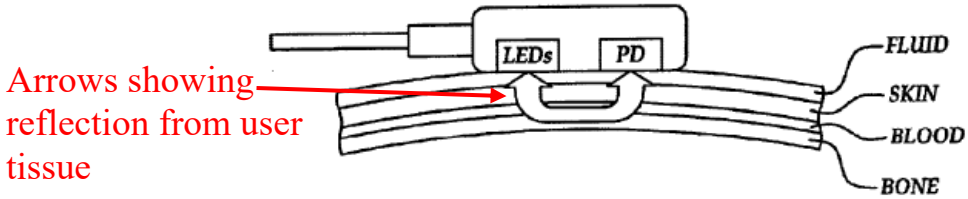


Figure 4

APPLE-1008, FIGS. 3, 4 (annotated).



MASIMO 2033
Apple v. Masimo
IPR2024-00242

***[15.8] wherein the light block is configured to optically isolate the plurality of light-emitting diodes from the plurality of photodiodes by preventing at least a portion of light emitted from the plurality of light-emitting diodes from reaching the plurality of photodiodes without first reaching the portion of the tissue measurement site;***

*See* [1.6].

***[15.9] a processor configured to receive and process the outputted at least one signal and determine a physiological parameter of the user responsive to the outputted at least one signal; and***

*See* [1.7].

***[15.10] wherein the physiological monitoring device is configured to transmit physiological parameter data to a separate processor.***

In the combination, Venkatraman discloses a wrist-worn wearable physiological device and transmitting information wirelessly from that device to a secondary device such as a smartphone. APPLE-1006, 31:1-16, 57:20-53; APPLE-1003, [142]. Venkatraman also discloses that such a configuration allows the secondary device to act as a user interface for the wrist-worn wearable physiological device. APPLE-1006, 57:42-44; APPLE-1003, [142]. Venkatraman further discloses that the secondary device (*i.e.*, smartphone) can show various metrics regarding the user's health, and receive inputs through a touch-screen display. APPLE-1006, 37:41-63, 55:29-51, 57:20-58:9; APPLE-1003, [142].

As described above, it would have obvious to a POSITA to implement this functionality from Venkatraman in the context of Mendelson-799's physiological monitoring device. *See* Sections IV.C. 2-3, *supra*.



**MASIMO 2033**
**Apple v. Masimo**
**IPR2024-00242**

### (d) Claim 18

***[18.0] The physiological monitoring device of claim 15, wherein the physiological parameter comprises oxygen saturation.***

*See* [9.0].

### (e) Claim 20

***[20.0] A system configured to measure one or more physiological parameters of a user, the system comprising:***

*See* [1.0].

***[20.1] a physiological monitoring device comprising:***

*See* [1.0].

***[20.2] a plurality of light-emitting diodes configured to emit light in a first shape;***

*See* [1.1].

***[20.3] a material configured to be positioned between the plurality of light-emitting diodes and tissue of the user when the physiological monitoring device is in use, the material configured to change the first shape into a second shape by which the light emitted from one or more of the plurality of light-emitting diodes is projected towards the tissue;***

*See* [1.2].

***[20.4] a plurality of photodiodes configured to detect at least a portion of the light after the at least the portion of the light passes through the tissue, the plurality of photodiodes further configured to output at least one signal responsive to the detected light;***

*See* [1.3].

***[20.5] a surface comprising a dark-colored coating, the surface configured to be positioned between the plurality of photodiodes and the tissue when the physiological monitoring device is in use,***

*See* [1.4].



**MASIMO 2033**
**Apple v. Masimo**
**IPR2024-00242**

***[20.6] wherein an opening defined in the dark-colored coating is configured to allow at least a portion of light reflected from the tissue to pass through the surface;***

*See* [1.5].

***[20.7] a light block configured to prevent at least a portion of light from the plurality of light-emitting diodes from reaching the plurality of photodiodes without first reaching the tissue; and***

*See* [1.6].

***[20.8] a processor configured to receive and process the outputted at least one signal and determine a physiological parameter of the user responsive to the outputted at least one signal; and***

*See* [1.7].

***[20.9] a processing device configured to wirelessly receive physiological parameter data from the physiological monitoring device, wherein the processing device comprises a user interface, a storage device, and a network interface configured to wirelessly communicate with the physiological monitoring device, and wherein the user interface includes a touch-screen display configured to present visual feedback responsive to the physiological parameter data.***

In the combination, Venkatraman discloses a wrist-worn wearable physiological device and transmitting information wirelessly from that device to a secondary device such as a smartphone. APPLE-1006, 31:1-16, 57:20-53; APPLE-1003, [154]. Venkatraman also discloses that such a configuration allows the secondary device to act as a user interface for the wrist-worn wearable physiological device. APPLE-1006, 57:42-44; APPLE-1003, [154]. Venkatraman further discloses that the secondary device (*i.e.*, smartphone) can show various metrics regarding the user's health, and receive inputs through a touch-screen

display. APPLE-1006, 37:41-63, 55:29-51, 57:20-58:9; APPLE-1003, [154].

#### (f) Claim 27

***[27.0] The system of claim 20, wherein at least one of the plurality of light-emitting diodes is configured to emit light of a first wavelength and at least one of the plurality of light-emitting diodes is configured to emit light of a second wavelength, the second wavelength being different than the first wavelength.***

In the combination, Mendelson-799's optical sensor 10 includes "a light source 12 composed of ***three closely spaced light emitting elements*** (e.g., LEDs or laser sources) 12*a*, 12*b* and 12*c* ***generating light of three different wavelengths***." APPLE-1004, 9:22-33. Mendelson-799 explains that "[t]he invention consists of, in addition to two measurement sessions typically carried out in pulse oximetry ***based on measurements with two wavelengths centered around the peak emission values of 660 nm (red spectrum) and 940 nm+-20 nm*** (IR spectrum), one additional measurement session is carried out with an additional wave length. At least one additional wavelength is preferably ***chosen to be substantially in the IR region*** of the electromagnetic spectrum, ***i.e., in the NIR-IR spectrum*** (having the peak emission value ***above 700 nm***). In a preferred embodiment the use of at least three wavelengths enables the calculation of an at least one additional ratio formed by the combination of ***the two IR wavelengths***." APPLE-1004, 6:42-57; APPLE-1003, [155].

## V. PTAB DISCRETION SHOULD NOT PRECLUDE INSTITUTION



MASIMO 2033
Apple v. Masimo
IPR2024-00242

### A. 314(a) – *Fintiv*

Consistent with Congressional intent, the goals of *Fintiv*, and the Interim Guidance issued by Director Vidal on June 21, 2022, Petitioner respectfully asks Board to consider the challenges raised in this Petition. *Apple Inc. v. Fintiv, Inc.*, IPR2020-00019, Paper 11, 6 (PTAB Mar. 20, 2020) (precedential) ("*Fintiv*"); APPLE-1032, 6-7, 9. The only parallel proceeding in which the '745 Patent is at issue is an ITC proceeding and, as Director Vidal noted, the "PTAB will not discretionarily deny petitions based on applying *Fintiv* to a parallel ITC proceeding."[7] APPLE-1013, 7.

Moreover, although Apple has every expectation that it will succeed in demonstrating invalidity of the '745 Patent claims presently asserted at the ITC, that outcome would not preclude Masimo from asserting the same claims (or any other claim of the '745 Patent) in a future district court action.

As the evidence presented in the instant Petition compellingly demonstrates, the Board's institution of an IPR based on the instant Petition would serve to

---

[7] Apart from Petitioners' showing that *Fintiv* favors institution, the *Fintiv* framework should not be followed because it is legally invalid. The framework (1) exceeds the Director's authority, (2) is arbitrary and capricious, and (3) was adopted without notice-and-comment rulemaking.



**MASIMO 2033**
**Apple v. Masimo**
**IPR2024-00242**

efficiently address issues of invalidity that the ITC cannot resolve, just as the Board's recent review of the related '695 Patent swiftly resolved invalidity of the highly similar claims at issue.[8] APPLE-1032, 3-5 ("where the PTAB determines that the information presented at the institution stage presents a compelling unpatentability challenge, that determination alone demonstrates that the PTAB should not discretionarily deny institution under *Fintiv*"), 9.

For at least these reasons, Petitioner respectfully submits that the Director's Interim Guidance compels evaluation of the instant Petition on its merits, and respectfully requests institution.

### B. 325(d) – Advanced Bionics

*Advanced Bionics* and the *Becton* factors strongly favor institution. *Advanced Bionics LLC v. MED-EL Elektromedizinische Gerate GmbH*, IPR2019-

[8] More specifically, the Board invalidated every challenged claim of the '695 Patent. *See* IPR2020-01722 Pap. 28, 26 (PTAB May 5, 2022) ("Petitioner has shown by a preponderance of the evidence that claims 6, 14, and 21 would have been obvious in view of the combined teachings of Sarantos, Mendelson-1991, and Chin"), 29 ("Petitioner has shown by a preponderance of the evidence that claim[s] 6, 14, and 21 of the '695 patent are unpatentable based on the combined teachings of Ackermans and Chin").



**MASIMO 2033**
**Apple v. Masimo**
**IPR2024-00242**

01469 Pap. 6 (PTAB Feb. 13, 2020)("*Advanced Bionics*")(precedential); *Becton, Dickinson and Co. v. B. Braun Melsungen AG*, IPR2017-01586 Pap. 8 (PTAB Dec. 15 2017)("Becton")(precedential).

Under the *Advanced Bionics* framework, discretionary denial under Section 325(d) is appropriate only if a condition in the framework's first prong is satisfied, and if there is no showing of material error under the second prong. *Advanced Bionics LLC v. MED-EL Elektromedizinische Gerate GmbH*, IPR2019-01469 Pap. 6 (PTAB Feb. 13, 2020). As stated in *Advanced Bionics*, those two prongs are:

> (1) whether the same or substantially the same art previously was presented to the Office or whether the same or substantially the same arguments previously were presented to the Office; and
> (2) if either condition of [the] first part of the framework is satisfied, whether the petitioner has demonstrated that the Office erred in a manner material to the patentability of challenged claims.

*Advanced Bionics.*, 8-10.

First, and as explained at length above (*supra*, §IV.D.), ***the examiner never issued a rejection during the '745 Patent's prosecution***, and instead issued a notice of allowance five weeks after the '772 Application's filing. APPLE-1002, 147-153.

Although the face of the '745 Patent lists hundreds of other references cited by Masimo, Masimo failed to cite the Ackermans, Venkatraman, and Mendelson -



**MASIMO 2033**
**Apple v. Masimo**
**IPR2024-00242**

799 references applied in this Petition to the examiner, despite being in possession of Apple's earlier IPR petitions challenging claims of the related '695 Patent based on those same references. *See*, *generally*, IPR2020-01722, -01723. Indeed, there is no indication in the '745 Patent's file history that the examiner was even aware of, let alone substantively considered, any of the prior art applied in this Petition prior to allowing the '772 Application. *See*, *generally*, APPLE-1002. The Ackermans, Venkatraman, Mendelson -799, Savant, and Haar references applied in this Petition are new, noncumulative prior art.

Because the '745 Patent's prosecution did not involve negotiation between the applicant and the examiner regarding the teachings of the prior art applied in the instant Petition, the instant Petition's art and arguments cannot be said to be the same as, or substantially similar to, art and arguments previously presented to the Office in connection with the '745 Patent. *See*, *generally*, APPLE-1002.

Indeed, neither condition of the first prong of the *Advanced Bionics* framework is met, and there is no need to reach the second prong to resolve against discretionary denial under Section 325(d). *See*, *e.g.*, *Oticon Medical AB et. al. v. Cochlear Ltd.*, IPR2019-00975 Pap. 15, 20 (PTAB Oct. 16, 2019)(precedential) ("There is new, noncumulative prior art asserted in the Petition…[f]or at least this reason, we determine not to exercise our discretion under § 325(d)").

For at least these reasons, Petitioner respectfully requests institution of the



**MASIMO 2033**
**Apple v. Masimo**
**IPR2024-00242**

instant Petition.

## VI. MANDATORY NOTICES UNDER 37 C.F.R. §42.8

### A. Real Parties-In-Interest Under 37 C.F.R. §42.8(b)(1)

Petitioner, Apple Inc., is the real party-in-interest.

### B. Related Matters Under 37 C.F.R. §42.8(b)(2)

Petitioner is not aware of any disclaimers, reexamination certificates or petitions for *inter partes* review for the '745 Patent.

The '745 Patent is the subject of *Masimo Corporation, et al. v. Apple Inc.*, ITC Inv. No. 337-TA-1276. APPLE-1031. This Petition is being filed concurrently with another petition for IPR of the '745 Patent (IPR2022-01291).[9] Apple has also recently filed IPRs challenging ITC-asserted patents in IPR2022-01271, IPR2022-01272, IPR2022-01273, IPR2022-01274, IPR2022-01275, and IPR2022-01276, and is concurrently filing IPRs challenging ITC-asserted patents in IPR2022-01299 and IPR2022-01300.

Masimo earlier asserted multiple patents against Apple in the U.S. District Court for the Central District of California (CDCA) (Case No. 8:20-cv-00048),

[9] Pursuant to the Trial Practice Guide, both petitions for IPR of the '127 Patent are being filed with a paper providing a succinct explanation of the differences between the petitions, why the issues addressed by the differences are material, and why the Board should exercise its discretion to institute both petitions.



MASIMO 2033
Apple v. Masimo
IPR2024-00242

including the related '695 Patent. Apple previously challenged the CDCA-asserted patents in IPR2020-01520, IPR2020-01521, IPR2020-01722, IPR2020-01536, IPR2020-01537, IPR2020-01538, IPR2020-01539, IPR2020-01713, IPR2020-01714, IPR2020-01715, IPR2020-01716, IPR2020-01723, IPR2020-01737, IPR2020-01737, IPR2021-00195, IPR2021-00208, and IPR2021-00209.

The Board subsequently invalidated '695 Patent claims 6, 14, and 21 in *Apple Inc. v. Masimo Corp.*, IPR2020-01722 Pap. 29, 2 (PTAB May 5, 2022), after Patent Owner disclaimed the remaining claims of the '695 Patent following institution of the IPR.

### C. Lead And Back-Up Counsel Under 37 C.F.R. §42.8(b)(3)

Petitioner provides the following designation of counsel.

| LEAD COUNSEL | BACK-UP COUNSEL |
|---|---|
| W. Karl Renner, Reg. No. 41,265<br>Fish & Richardson P.C.<br>3200 RBC Plaza<br>60 South Sixth Street<br>Minneapolis, MN 55402<br>Tel: 202-783-5070<br>Fax: 877-769-7945<br>Email: IPR50095-0045IP2@fr.com | Daniel D. Smith, Reg No. 71,278<br>Andrew B. Patrick, Reg. No. 63,471<br>Nicholas Stephens, Reg. No. 74,320<br>3200 RBC Plaza<br>60 South Sixth Street<br>Minneapolis, MN 55402<br>Tel: 202-783-5070<br>Fax: 877-769-7945<br>PTABInbound@fr.com |

### D. Service Information

Please address all correspondence and service to the address listed above. Petitioner consents to electronic service by email at IPR50095-0045IP2@fr.com.



MASIMO 2033
Apple v. Masimo
IPR2024-00242

## VII. PAYMENT OF FEES – 37 C.F.R. §42.103

Petitioner authorizes the Office to charge Deposit Account No. 06-1050 for the petition fee set in 37 C.F.R. §42.15(a) and for any other required fees.

## VIII. CONCLUSION

Accordingly, Petitioner respectfully requests IPR of the Challenged Claims.

Respectfully submitted,

Dated: July 22, 2022

/Daniel D. Smith/

W. Karl Renner, Reg. No. 41,265
Daniel D. Smith, Reg No. 71,278
Andrew B. Patrick, Reg. No. 63,471
Nicholas Stephens, Reg. No. 74,320
Fish & Richardson P.C.
3200 RBC Plaza, 60 South Sixth Street
Minneapolis, MN 55402

Tel: 202-783-5070
Fax: 877-769-7945

(Control No. IPR2022-01292)

*Attorneys for Petitioner*



**MASIMO 2033**
**Apple v. Masimo**
**IPR2024-00242**

## CERTIFICATION UNDER 37 CFR § 42.24

Under the provisions of 37 CFR § 42.24(d), the undersigned hereby certifies that the word count for the foregoing Petition for *Inter partes* Review totals 13,687 words, which is less than the 14,000 allowed under 37 CFR § 42.24.

Dated: July 22, 2022

/Daniel D. Smith/

W. Karl Renner, Reg. No. 41,265
Daniel D. Smith, Reg No. 71,278
Andrew B. Patrick, Reg. No. 63,471
Nicholas Stephens, Reg. No. 74,320
Fish & Richardson P.C.
3200 RBC Plaza, 60 South Sixth Street
Minneapolis, MN 55402

Tel: 202-783-5070
Fax: 877-769-7945

*Attorneys for Petitioner*



**MASIMO 2033**
**Apple v. Masimo**
**IPR2024-00242**

## CERTIFICATE OF SERVICE

Pursuant to 37 CFR §§ 42.6(e)(4)(i) *et seq.* and 42.105(b), the undersigned certifies that on July 22, 2022, a complete and entire copy of this Petition for *Inter Partes* Review and all supporting exhibits were provided via Federal Express, to the Patent Owner by serving the correspondence address of record as follows:

KNOBBE, MARTENS, OLSON & BEAR, LLP (MASIMO)
MASIMO CORPORATION
2040 MAIN STREET
FOURTEENTH FLOOR
IRVINE, CA 92614

/Crena Pacheco/

Crena Pacheco
Fish & Richardson P.C.
60 South Sixth Street, Suite 3200
Minneapolis, MN 55402
(617) 956-5938