PUBLIC VERSION

Trials@uspto.gov
571-272-7822

Paper 75
Date: January 30, 2024

UNITED STATES PATENT AND TRADEMARK OFFICE

BEFORE THE PATENT TRIAL AND APPEAL BOARD

APPLE INC.,
Petitioner,

v.

MASIMO CORPORATION,
Patent Owner.

IPR2022-01291
Patent 10,687,745 B1

Before JOSIAH C. COCKS, GEORGE R. HOSKINS, and ROBERT A. POLLOCK, *Administrative Patent Judges*.

HOSKINS, *Administrative Patent Judge*.

JUDGMENT
Final Written Decision
Determining All Challenged Claims Unpatentable
35 U.S.C. § 318(a)

ORDER
Denying Petitioner's Motion to Exclude and
Denying Patent Owner's Motion to Exclude
37 C.F.R. § 42.64(c)

MASIMO 2035
Apple v. Masimo
IPR2024-00242

TABLE OF CONTENTS

I. INTRODUCTION 1
II. BACKGROUND 2
A. Real Parties-in-Interest and Related Proceedings 2
B. The '745 Patent Specification 4
C. The Challenged Claims of the '745 Patent 8
D. Asserted Prior Art 9
E. Asserted Grounds 10
F. Testimonial Evidence 10
III. ANALYSIS OF PETITIONER'S GROUNDS 11
A. Statement of Law 11
B. Level of Ordinary Skill in the Art 12
C. Claim Construction 13
D. Ground 1A — Obviousness over Iwamiya and Sarantos 15
1. Iwamiya 15
2. Sarantos 18
3. Claim 1 20
a) Iwamiya vs. Claim 1 21
b) Sarantos vs. Claim 1 29
c) Motivation for Combining Iwamiya and Sarantos with a Reasonable Expectation of Success 30
(i) Petitioner's Contentions (in the Petition) 30
(ii) Patent Owner's Opposition 31
(iii) Petitioner's Reply 33
(iv) Patent Owner's Sur-reply 36
(v) Analysis and Determination as to Motivation to Combine with a Reasonable Expectation of Success 37
d) Conclusion as to Claim 1 43

MASIMO 2035
Apple v. Masimo
IPR2024-00242

4. Claim 9 44
a) Scope of Claim 9 45
b) Iwamiya and Sarantos vs. Claim 9 47
(i) Iwamiya vs. Claim 9 47
(ii) Sarantos vs. Claim 9 48
(1) Summary of Sarantos Disclosure 48
(2) Petitioner's Contentions (in the Petition) 49
(3) Patent Owner's Opposition 49
(4) Petitioner's Reply 50
(5) Patent Owner's Sur-reply 51
(6) Analysis and Findings as to Sarantos's Disclosure of Determining Oxygen Saturation at the Wrist 51
c) Motivation for Combining Iwamiya and Sarantos to Determine Oxygen Saturation at the Wrist 55
(i) Petitioner's Contentions (in the Petition) 55
(ii) Patent Owner's Opposition 56
(iii) Petitioner's Reply 59
(iv) Patent Owner's Sur-reply 61
(v) Analysis and Determination as to Motivation for Combining Iwamiya and Sarantos to Determine Oxygen Saturation at the Wrist 62
d) Reasonable Expectation of Success in Combining Iwamiya and Sarantos to Determine Oxygen Saturation at the Wrist 70
(i) Petitioner's Contentions (in the Petition) 70
(ii) Patent Owner's Opposition 70
(1) The ITC Investigation 70
(2) Patent Owner's Argument 79
(iii) Petitioner's Reply 82
(iv) Patent Owner's Sur-reply 84

MASIMO 2035
Apple v. Masimo
IPR2024-00242

(v) Analysis and Determination as to Reasonable Expectation of Success in Combining Iwamiya and Sarantos to Determine Oxygen Saturation at the Wrist 89
(1) Scope of, and Incorporation by Reference in, the Petitioner Reply 89
(2) Analysis and Determination 91
e) Objective Indicia of Nonobviousness 103
(i) Patent Owner's Argument 103
(ii) Petitioner's Reply 104
(iii) Patent Owner's Sur-reply 104
(iv) Analysis and Determination as to Objective Indicia of Nonobviousness 105
f) Weighing of Evidence and Conclusion as to Obviousness 107
E. Ground 1B — Obviousness over Iwamiya, Sarantos, and Venkatraman 108
1. Venkatraman 108
2. Claim 15 108
a) Scope of Claim 15 109
b) Petitioner's Contentions (in the Petition) 112
c) Patent Owner's Opposition 115
d) Petitioner's Reply 117
e) Patent Owner's Sur-reply 120
f) Analysis and Determination as to Claim 15 122
3. Claim 18 127
4. Claim 20 127
a) Petitioner's Contentions (in the Petition) 128
b) Patent Owner's Opposition 129
c) Petitioner's Reply 129
d) Patent Owner's Sur-Reply 130
e) Analysis and Determination as to Claim 20 130

MASIMO 2035
Apple v. Masimo
IPR2024-00242

5. Claim 27 131
F. Grounds 2A and 2B — Obviousness over Sarantos, Shie, and Venkatraman 132
IV. PATENT OWNER'S MOTION TO EXCLUDE EVIDENCE 133
V. PETITIONER'S MOTION TO EXCLUDE EVIDENCE 136
VI. SUMMARY OF CONCLUSIONS 138
VII. ORDER 139

MASIMO 2035
Apple v. Masimo
IPR2024-00242

I. INTRODUCTION

Apple Inc. ("Apple" or "Petitioner") filed a Petition (Paper 51, "Pet.")[1] pursuant to 35 U.S.C. §§ 311–319 for *inter partes* review of U.S. Patent No. 10,687,745 B1 (Ex. 1001, "the '745 patent"), claims 1, 9, 15, 18, 20, and 27. The Board issued an Institution Decision (Paper 15) instituting the petitioned review.

Masimo Corporation ("Masimo" or "Patent Owner") then filed a Patent Owner Response (Papers 28 and 29, "PO Resp.") to the Petition. Apple filed a Reply (Papers 39 and 40, "Pet. Reply") to the Patent Owner Response. Masimo filed a Sur-reply (Papers 49 and 50, "PO Sur-reply") to the Reply. Apple filed, with prior Board authorization, a Response to Expert Testimony submitted with the Sur-reply (Paper 55; *see* Paper 43 (Order granting authorization)).

An oral hearing was held on November 17, 2023, for which the transcript was entered into the record (Papers 71 and 74, "Tr.").

Masimo filed a Motion to Exclude Evidence proffered by Apple (Paper 56). Apple filed an Opposition (Paper 61), and Masimo filed a Reply (Paper 63). We *deny* Masimo's Motion, for reasons provided below.

Apple filed a Motion to Exclude Evidence proffered by Masimo (Paper 57). Masimo filed an Opposition (Papers 58 and 60), and Apple filed a Reply (Paper 62). We *deny* Apple's Motion, for reasons provided below.

---

[1] Paper 51 is the Second Corrected Petition. *See* Paper 2 (Initial Petition); Paper 10 (First Corrected Petition); *see also* Ex. 3001 (Email granting Petitioner leave to file First Corrected Petition); Paper 48, 2 (Order granting Petitioner leave to file Second Corrected Petition).

MASIMO 2035
Apple v. Masimo
IPR2024-00242

The Patent Owner Response relies on evidence that has been sealed via a Protective Order.[2] Accordingly, the Patent Owner Response, the Petitioner Reply, the Patent Owner Sur-reply, the Transcript, and Patent Owner's Opposition to Petitioner's Motion to Exclude, all have been filed under seal. *See* Papers 28, 40, 49, 58, and 71. However, publicly available versions that are redacted to protect the sealed information were also filed. *See* Papers 29, 39, 50, 60, and 74. In each instance, the two filings are identical except for the redactions in the publicly available version. Citations in this Decision refer to the sealed versions, so this Decision is being entered under seal. In an Order set forth below, the parties are required to jointly file a redacted, public version of this Decision no later than three weeks following entry of this Decision.

We have jurisdiction under 35 U.S.C. § 6(b)(4) and § 318(a). This Decision is a final written decision under 35 U.S.C. § 318(a) and 37 C.F.R. § 42.73 as to the patentability of claims 1, 9, 15, 18, 20, and 27 of the '745 patent. We determine Apple has shown by a preponderance of the evidence that those claims are unpatentable.

II. BACKGROUND

A. Real Parties-in-Interest and Related Proceedings

Apple identifies itself (i.e., Apple Inc.) as a real party-in-interest. *See* Pet. 47. Masimo identifies itself (i.e., Masimo Corporation) as a real party-in-interest. *See* Paper 5, 1.

---

[2] *See* Paper 24 (Protective Order entered as Ex. 1035); Papers 41, 70, and 73 (Orders granting various Motions to Seal, and concerning Transcript).

MASIMO 2035
Apple v. Masimo
IPR2024-00242

Apple has filed three other IPR petitions challenging the '745 patent. In IPR2022-01292, Apple challenged the same claims challenged in the present proceeding, but on different grounds. *See* IPR2022-01292, Paper 10, at 1–2 (Corrected Petition identifying the grounds). Institution of review was denied in IPR2022-01292, on the same day that institution was granted in the present proceeding. *See* IPR2022-01292, Paper 15 (Decision Denying Institution).

In IPR2022-01465, Apple challenged different claims (i.e., claims 2–6, 8, 10–14, 17, 19, and 21–26) than the claims challenged in the present proceeding (i.e., claims 1, 9, 15, 18, 20, and 27). *See* IPR2022-01465, Paper 10, at 1–2 (Corrected Petition identifying the grounds). Institution of review was granted. *See* IPR2022-01465, Paper 15 (Decision Granting Institution). A Final Written Decision in IPR2022-01465 will be entered soon.

In IPR2022-01466, Apple challenged the same claims challenged in IPR2022-01465, but on different grounds. *See* IPR2022-01466, Paper 10, at 1–2 (Corrected Petition identifying the grounds). Institution of review was denied. *See* IPR2022-01466, Paper 15 (Decision Denying Institution).

There is a related U.S. International Trade Commission (ITC) investigation, in which Masimo accused Apple of importing devices (i.e., the Apple Watch Series 6) that infringe the '745 patent and other patents. *See In the Matter of Certain Light-Based Physiological Measurement Devices and Components Thereof*, No. 337-TA-1276 (Int'l Trade Comm'n) (hereafter "ITC Investigation"); Ex. 1031 (Complaint initiating the ITC Investigation). The ITC Investigation resulted in a "Final Initial Determination" concerning

MASIMO 2035
Apple v. Masimo
IPR2024-00242

the '745 patent, authored by an Administrative Law Judge (Exs. 1033[3] and 2093), and a "Commission Opinion" (Ex. 2104) reviewing the Initial Determination. At the time of our present Decision, the Commission Opinion is on appeal to the Federal Circuit. *See Apple, Inc. v. Int'l Trade Comm'n, et al.*, No. 24-1285 (Fed. Cir.).

There is a related U.S. District Court litigation in which Masimo has asserted the '745 patent against Apple. *See Apple Inc. v. Masimo Corp.*, No. 1:22-cv-01378-MN (D. Del.); Paper 13. At the time of our present Decision, this litigation remains pending before the District Court.

The parties have also identified yet further related proceedings concerning other patents. *See* Pet. 47–48; Paper 5, 1–2; Paper 14, 1–2.

B. The '745 Patent Specification

The '745 patent is directed to a non-invasive, light-based physiological monitoring device. *See* Ex. 1001, code (57). In one embodiment, the device is utilized to measure a patient's arterial blood oxygen saturation, sometimes shorthanded as "SpO2" or "SpO_2." *See id.* at 1:23–27, 1:54–2:4, 2:16–18. In other embodiments, the device is utilized to measure other blood constituent characteristics. *See id.* at 2:40–50 (stating the device can measure "oxygen, carboxyhemoglobin, methemoglobin, total hemoglobin, glucose, proteins, lipids, a percentage thereof (e.g., saturation), pulse rate, perfusion index, oxygen content, total

[3] Citations herein to Exhibit 1033 refer to the document's original pagination, not the pagination added by Apple at the bottom of each page.

MASIMO 2035
Apple v. Masimo
IPR2024-00242

hemoglobin, Oxygen Reserve Index™ (ORI™) or . . . m any other physiologically relevant patient characteristics").

Figure 3 of the '745 patent is reproduced below.

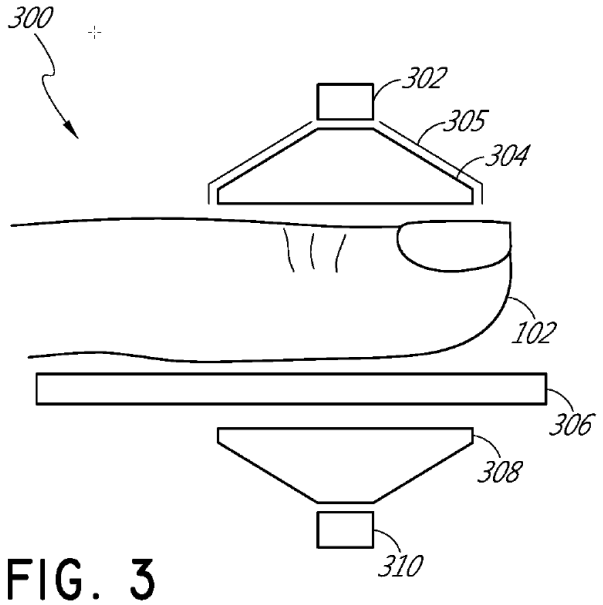

The '745 Patent, Figure 3.

Figure 3 is a schematic side view of pulse oximetry sensor 300 and tissue measurement site 102 (i.e., a patient's fingertip). *See id.* at 5:12–14, 7:4–9.

Emitter 302 emits light toward tissue site 102, and diffuser 304 spreads the light over an area. *See id.* 7:12–13, 7:30–44. "In some embodiments, the light diffuser 304 is a beam shaper that can homogenize the input light beam from the emitter 302, shape the output intensity profile of the received light, and define the way (e.g., the shape or pattern) the emitted light is distributed to the tissue measurement site 102." *Id.* at 7:44–62; *see also id.* at 7:63–66 ("Advantageously, the diffuser 304 can receive emitted light in the form of a point optical source and spread the light to fit a desired surface area on a plane defined by the surface of the

MASIMO 2035
Apple v. Masimo
IPR2024-00242

tissue measurement site 102."). Reflector 305 prevents the emitted light from escaping out of the top portion of diffuser 304, thereby maximizing the light that reaches tissue site 102. *See id.* at 7:14–22.

The light enters tissue site 102, interacts with the patient's blood flowing through the tissue site, and exits the tissue on the opposite side from which the light entered the tissue. *See id.* at Fig. 3, 6:55–64, 7:6–22.

Filter 306 is a "light-absorbing" material "such as, for example, black pigment," and it has an opening (not shown in Figure 3) through which the transmitted light may pass to reach light concentrator 308 and light detector 310. *Id.* at 7:12–14, 8:32–38, 8:54–59; *see also id.* at 9:31–51 (Fig. 4A illustrates filter 306 with rectangular opening 402, in relation to light concentrator 308 and light detector 310). Detector 310 outputs a signal responsive to the transmitted light, and the signal is communicated (not shown in Figure 3) to a processor which utilizes the signal to determine a physiological parameter of interest, such as blood oxygen saturation. *See id.* at 9:19–30; *see also id.* at 12:1–14:29 (Fig. 8 illustrates optical physiological measurement system 800, wherein detector 806 outputs signal 807 to processor 810).

Figures 7A and 7B of the '745 patent are reproduced below (on the next page).

MASIMO 2035
Apple v. Masimo
IPR2024-00242

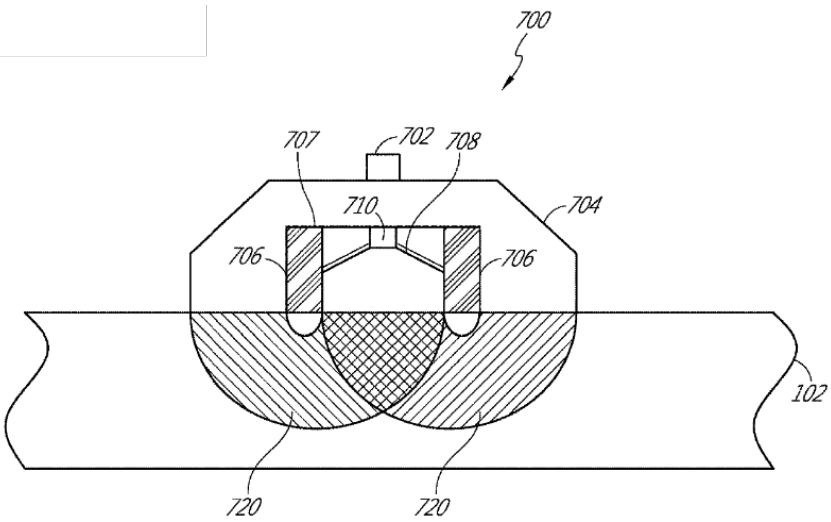

FIG. 7A

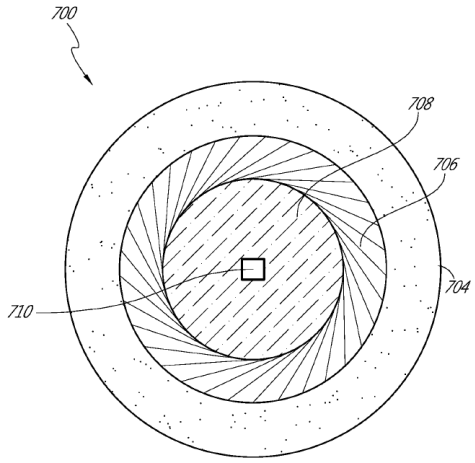

FIG. 7B

The '745 Patent, Figures 7A and 7B.

Figure 7A is a schematic side view of pulse oximetry sensor 700 and tissue measurement site 102, and Figure 7B is a schematic top view of sensor 700 with some components removed. *See id.* at 5:28–33, 10:40–42, 11:54–56. Sensor 700 is useful in connection with a tissue site having a "relatively flat surface, such as, for example a wrist, because the emitter 702 and detector 710 are [located on] the same side of the tissue measurement site 102." *Id.* at 10:43–49. Sensor 700 includes light diffuser 704 and light

concentrator 708, and the components 702, 704, 708, and 710 function substantially the same as the corresponding components 302, 304, 308, and 310 of sensor 300 as described above. *See id.* at 10:49–11:9, 11:21–43. One difference, however, is that diffuser 704 spreads the light "over a wide, donut-shaped area" (seen best in Figure 7B) to enter tissue site 102. *Id.* at 10:65–11:6.

Sensor 700 additionally includes light blocker 706 and cover 707, which prevent light emitted by light emitter 702 from passing directly into light detector 710 without first traversing light path 720 within tissue site 102. *See id.* at 11:10–20, 11:44–67.

C. The Challenged Claims of the '745 Patent

The Petition challenges claims 1, 9, 15, 18, 20, and 27 of the '745 patent. *See* Pet. 1–2. We reproduce illustrative claims 1 and 9 here, with Apple's labeling scheme:

1. [1.0] A physiological monitoring device comprising:

   [1.1] a plurality of light-emitting diodes configured to emit light in a first shape;

   [1.2] a material configured to be positioned between the plurality of light-emitting diodes and tissue on a wrist of a user when the physiological monitoring device is in use, the material configured to change the first shape into a second shape by which the light emitted from one or more of the plurality of light-emitting diodes is projected towards the tissue;

   [1.3] a plurality of photodiodes configured to detect at least a portion of the light after the at least the portion of the light passes through the tissue, the plurality of photodiodes

MASIMO 2035
Apple v. Masimo
IPR2024-00242

further configured to output at least one signal responsive to the detected light;

[1.4] a surface comprising a dark-colored coating, the surface configured to be positioned between the plurality of photodiodes and the tissue when the physiological monitoring device is in use, [1.5] wherein an opening defined in the dark-colored coating is configured to allow at least a portion of light reflected from the tissue to pass through the surface;

[1.6] a light block configured to prevent at least a portion of the light emitted from the plurality of light-emitting diodes from reaching the plurality of photodiodes without first reaching the tissue; and

[1.7] a processor configured to receive and process the outputted at least one signal and determine a physiological parameter of the user responsive to the outputted at least one signal.

9. [9.0] The physiological monitoring device of claim 1, wherein the physiological parameter comprises oxygen saturation.

Ex. 1001, 15:32–61, 16:21–23.

D. Asserted Prior Art

Apple relies principally on the following four references. *See* Pet. 2.

Name	Reference	Exhibit No.
Iwamiya	US 8,670,819 B2	1004
Sarantos	US 9,392,946 B1	1005
Venkatraman	US 2014/0275854 A1	1006
Shie	US 6,483,976 B2	1007

Apple asserts each reference qualifies as prior art to the ’745 patent by virtue of having a publication date (Iwamiya, Venkatraman, and Shie) or a filing

MASIMO 2035
Apple v. Masimo
IPR2024-00242

date (Sarantos) preceding the '745 patent's earliest possible effective filing date of July 2, 2015. *See* Pet. 2. Masimo does not dispute this assertion, and we find it is supported by the evidence. *See* Ex. 1001, codes (60) and (63); Ex. 1004, code (45) (Iwamiya issued Mar. 11, 2014); Ex. 1005, code (22) (Sarantos filed May 28, 2015); Ex. 1006, code (43) (Venkatraman published Sept. 18, 2014); Ex. 1007, code (45) (Shie issued Nov. 19, 2022).

E. Asserted Grounds

Apple asserts the following four grounds of unpatentability for the challenged claims. *See* Pet. 2.

Ground	Claims Challenged	35 U.S.C. §[4]	References
1A	1, 9	103	Iwamiya, Sarantos
1B	15, 18, 20, 27	103	Iwamiya, Sarantos, Venkatraman
2A	1, 9, 15, 18	103	Sarantos, Shie
2B	15, 18, 20, 27	103	Sarantos, Shie, Venkatraman

F. Testimonial Evidence

Apple relies on the testimony of Brian Anthony, Ph.D. (Exs. 1003, 1042, 1082, 2071, and 2101) as a proffered expert witness. Masimo relies on the testimony of R. James Duckworth, Ph.D. (Exs. 1059, 1081, 2002, 2070, and 2100) as a proffered expert witness.

[4] The Leahy-Smith America Invents Act ("AIA") included revisions to 35 U.S.C. § 103 that became effective in March 2013. The '745 patent has an earliest possible effective filing date of July 2, 2015 (*see* Ex. 1001, codes (60) and (63)), so we apply the post-AIA version of § 103.

MASIMO 2035
Apple v. Masimo
IPR2024-00242

The record also contains testimony from several witnesses provided during the ITC Investigation, as summarized below in Section III.D.4(d)(ii)(1).

III. ANALYSIS OF PETITIONER'S GROUNDS

A. Statement of Law

Apple bears the burden of proving unpatentability of the challenged claims, and this burden of persuasion never shifts to Masimo. *See Dynamic Drinkware, LLC v. Nat'l Graphics, Inc.*, 800 F.3d 1375, 1378 (Fed. Cir. 2015). Apple must prove unpatentability by a preponderance of the evidence. *See* 35 U.S.C. § 316(e); 37 C.F.R. § 42.1(d).

A patent claim is unpatentable under 35 U.S.C. § 103 if the differences between the claimed subject matter and the prior art are such that the subject matter, as a whole, would have been obvious before the effective filing date of the claimed invention to a person having ordinary skill in the art to which the claimed invention pertains. *See KSR Int'l Co. v. Teleflex Inc.*, 550 U.S. 398, 406 (2007). The question of obviousness is resolved on the basis of underlying factual determinations including: (1) the scope and content of the prior art; (2) any differences between the claimed subject matter and the prior art; (3) the level of ordinary skill in the art; and (4) objective indicia of nonobviousness, if made available in the record as Masimo has done in this case. *See Graham v. John Deere Co.*, 383 U.S. 1, 17–18 (1966). "While the sequence of these questions might be reordered in any particular case," *KSR*, 550 U.S. at 407, the Federal Circuit has explained that an obviousness determination can be made only after considering all the

MASIMO 2035
Apple v. Masimo
IPR2024-00242

Graham factors. *See, e.g.*, *Kinetic Concepts, Inc. v. Smith & Nephew, Inc.*, 688 F.3d 1342, 1360 (Fed. Cir. 2012).

B. Level of Ordinary Skill in the Art

The level of ordinary skill in the art is "a prism or lens" through which we view the prior art and the claimed invention. *Okajima v. Bourdeau*, 261 F.3d 1350, 1354–55 (Fed. Cir. 2001) (citing *Al-Site Corp. v. VSI Int'l, Inc.*, 174 F.3d 1308, 1324 (Fed. Cir. 1999)). "This reference point prevents . . . factfinders from using their own insight or, worse yet, hindsight, to gauge obviousness." *Id.* at 1355. "The person of ordinary skill in the art is a hypothetical person who is presumed to know the relevant art" at the time of the invention. *In re GPAC Inc.*, 57 F.3d 1573, 1579 (Fed. Cir. 1995). In finding the level of ordinary skill in the art, we may consider various factors, including: "(1) the educational level of the inventor; (2) type of problems encountered in the art; (3) prior art solutions to those problems; (4) rapidity with which innovations are made; (5) sophistication of the technology; and (6) educational level of active workers in the field." *Best Med. Int'l, Inc. v. Elekta Inc.*, 46 F.4th 1346, 1353 (Fed. Cir. 2022) (citations omitted). "The patent's purpose can also be informative." *Id.* (citation omitted).

Apple argues a person having ordinary skill in the art pertaining to the '745 patent is "a person with a working knowledge of physiological monitoring technologies" as well as "a Bachelor of Science degree in an academic discipline emphasizing the design of electrical, computer, or software technologies, in combination with training or at least one to two

MASIMO 2035
Apple v. Masimo
IPR2024-00242

years of related work experience with capture and processing of data or information, including but not limited to physiological monitoring technologies." Pet. 5; Ex. 1003 ¶ 25. "Alternatively," according to Apple, "the person could have also had a Master of Science degree in a relevant academic discipline with less than a year of related work experience in the same discipline." Pet. 5–6; Ex. 1003 ¶ 25.

Masimo applies Apple's ordinary skill formulation. *See* PO Resp. 10; Ex. 2002 ¶¶ 29–32; Ex. 2070 ¶ 5. According to Masimo, this formulation "is relatively low" which "confirms patentability" of the challenged claims. PO Resp. 10.

Based on the record presented, we find Apple's undisputed formulation of ordinary skill in the art reflects the appropriate level of skill, as demonstrated by the '745 patent and the prior art of record. Therefore, we adopt and apply Apple's formulation here.

C. Claim Construction

We interpret the '745 patent claims "using the same claim construction standard that would be used to construe the claim in a civil action under 35 U.S.C. 282(b)." 37 C.F.R. § 42.100(b). This "includ[es] construing the claim in accordance with the ordinary and customary meaning of such claim as understood by one of ordinary skill in the art and the prosecution history pertaining to the patent." *Id.*

Masimo construes the phrase "change the first shape into a second shape," recited in independent claims 1 and 20. *See* PO Resp. 11–16. Apple also discusses the meaning of that phrase. *See* Pet. 4–5. However, the

MASIMO 2035
Apple v. Masimo
IPR2024-00242

significance of Masimo's construction lies principally in Apple's Grounds 2A and 2B, particularly in whether the combination of Sarantos and Shie includes a material that changes a first shape of light into a second shape of light. *See, e.g.*, PO Resp. 4, 13–16, 54–56; Pet. Reply 24–26; PO Sur-reply 12–16. Masimo does not rely on its proffered claim construction to oppose Apple's contention, in Grounds 1A and 1B, that Iwamiya includes a material that changes a first shape of light into a second shape of light. *See, e.g.*, PO Resp. 17–53 (Masimo's arguments opposing Grounds 1A and 1B). Indeed, as discussed below in Section III.D.3(a), we find Iwamiya includes such a material, even applying Masimo's claim construction. For these reasons, we need not and we do not consider the propriety of Masimo's construction of "change the first shape into a second shape" in this Decision. *See Realtime Data, LLC v. Iancu*, 912 F.3d 1368, 1375 (Fed. Cir. 2019) ("The Board is required to construe 'only those terms . . . that are in controversy, and only to the extent necessary to resolve the controversy.'") (quoting *Vivid Techs., Inc. v. Am. Sci. & Eng'g, Inc.*, 200 F.3d 795, 803 (Fed. Cir. 1999)).

We address the meaning of "determine" (claim 1) "oxygen saturation" (claim 9) below in Section III.D.4(a).

Further, the parties dispute the proper claim construction of a photodiode "array having a spatial configuration corresponding to a shape of the portion of the tissue measurement site encircled by the light block," recited in independent claim 15. This dispute is discussed and resolved below in Section III.E.2(a).

MASIMO 2035
Apple v. Masimo
IPR2024-00242

Apart from the foregoing issues, and based on our review of the entire record, we determine no explicit constructions are needed to resolve the issues presented in this Decision. *See Realtime Data*, 912 F.3d at 1375.

D. Ground 1A — Obviousness over Iwamiya and Sarantos

In Ground 1A, Apple argues claims 1 and 9 of the '745 patent are unpatentable as having been obvious over Iwamiya and Sarantos. *See* Pet. 2, 6–20; Pet. Reply 3–23. Masimo opposes. *See* PO Resp. 1–4, 17–53; PO Sur-reply 2–8, 12, 19–33.

We conclude a preponderance of the evidence supports Apple's assertions as to both challenged claims. We begin our analysis with brief summaries of Iwamiya and Sarantos, then we address the parties' contentions as to obviousness.

1. Iwamiya

Iwamiya discloses a light-based biological information detecting apparatus. *See* Ex. 1004, code (57), 1:17–22. In one embodiment, the measured biological information is a patient's "pulse wave." *Id.* at 1:41–42, 4:13–16, 9:3–5.

Figure 4 of Iwamiya is reproduced below (on the next page).

MASIMO 2035
Apple v. Masimo
IPR2024-00242

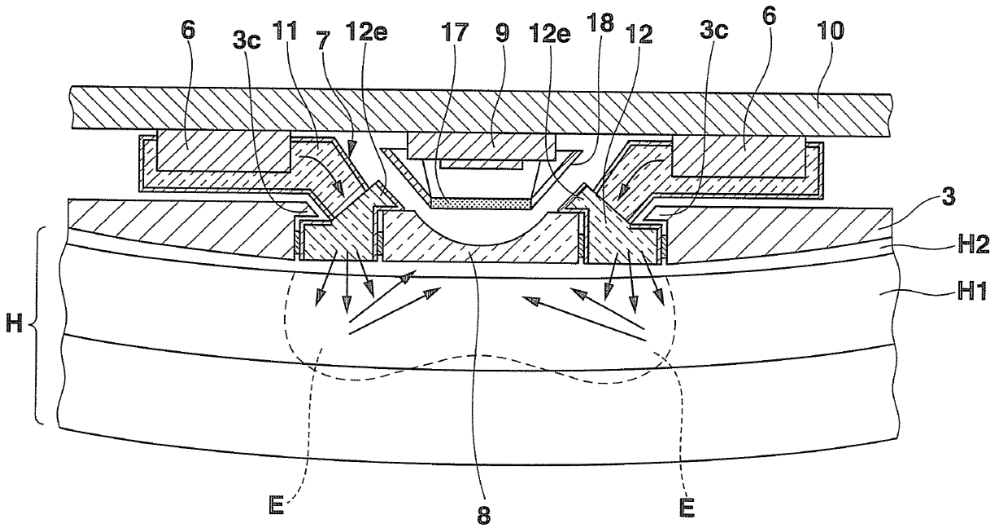

Iwamiya, Figure 4.

Figure 4 is a cross-sectional view of a wristwatch case including back cover 3, and enclosing a biological information detecting apparatus, pressed against a patient's skin H. *See id.* at Figs. 1–4, 4:5–16, 5:54–6:21, 9:61–63.

The detecting apparatus comprises several components mounted on circuit board 10. *See id.* at 6:22–31. Two light emitting units 6, located at the 3 o'clock and 9 o'clock positions of the watch face, emit observation light to enter annular light guide unit 7. *See id.* at 6:7–14, 6:34–39, 6:49–52. Unit 7 comprises light guiding ring portion 11 and diffusion ring portion 12 to guide the light to the surface of skin H, as shown by arrows in Figure 4. *See id.* at 6:10–14, 6:41–7:24, 10:18–33. Diffusion ring portion 12 "is formed in almost a ring shape, using a clouded or milky resin with a light diffusing property" in order to "uniformly diffuse and irradiate the observation light over a wide area of a ring shape with respect to the skin H." *Id.* at Fig. 2, 7:4–24, 10:25–33. Unit 7 includes reflection layers 13 and 15 on its external surfaces, to prevent observation light from leaking out

of unit 7 except where the bottom surface of diffusion ring portion 12 contacts skin H. *See id.* at Fig. 3, 6:62–7:3, 7:41–49, 8:14–19.

The light enters skin H, interacts with the patient's blood flowing through the skin in annular irradiation area E, and back-scatters to exit the skin from the same surface it entered the skin, all as shown by arrows in Figure 4. *See id.* at 1:28–34, 2:26–31, 6:14–21.

The back-scattered light enters scattered light taking unit 8, which is a transparent lens to focus the light on light receiving unit 9. *See id.* at 6:14–21, 7:50–8:13, 10:62–11:3, 12:55–67. The focused light encounters optical filter 17 mounted on the lower side of light shielding frame 18. *See id.* at 8:38–42. Light that passes through filter 17 reaches light receiving unit 9, which outputs a signal responsive to the received light, and the signal is communicated (not shown in Figure 4) to a processor that utilizes the signal to determine biological information of interest, such as a pulse wave. *See id.* at 6:17–21, 8:29–37; *see also id.* at 8:58–9:43 (Fig. 10 illustrates a circuit configuration of the biological information detecting apparatus, including unit 9 sending signals to CPU 20).

Iwamiya discusses how previously known pulse wave measuring devices generally used observation light wavelengths "shorter than 600 nm" (nanometers), because absorbance of light by hemoglobin in the blood is "very high" below 600 nm versus longer wavelengths. *Id.* at 1:43–52. However, according to Iwamiya, when the patient's skin contains a large

MASIMO 2035
Apple v. Masimo
IPR2024-00242

amount of melanin,[5] then observation light in the ultraviolet to visible band (i.e., below about 700 nm)[6] may be absorbed by melanin pigment instead of hemoglobin, so biological information such as a pulse wave cannot be measured accurately. *See id.* at 1:53–2:6.

Accordingly, Iwamiya's light emitting units 6 emit infrared light at a wavelength of 940 nm, "where absorbance of melanin[] pigment contained in the skin H is low." *Id.* at Fig. 6, 6:31–34, 10:15–18, 10:34–38, 11:43–49. Similarly, "light receiving unit 9 has a spectral sensitivity characteristic of reacting strongest with light of a specific wavelength band of about $\lambda = 940$ nm," with a "gradually lowered" sensitivity at lower wavelengths. *Id.* at 8:29–37, Fig. 9.

In addition, optical filter 17 "transmit[s]" light wavelengths greater than 900 nm and "shield[s]" light wavelengths less than 900 nm, in order to "alleviate[] an influence from a measurement change due to external light, such as sunlight." *Id.* at 8:42–57, 11:3–8, 13:1–23.

2. *Sarantos*

Sarantos discloses a fitness monitor worn on a user's wrist like a wristwatch, which utilizes photoplethysmography (PPG) sensors (i.e.,

---

[5] Iwamiya indicates this may occur, for example, if the patient has a dark skin color. *See* Ex. 1004, 1:64–66. Iwamiya employs two spellings, "melanine" and "melanin." *Id.* at 1:53–2:6, Fig. 6. Masimo employs the latter spelling, and so do we. *See, e.g.*, PO Resp. 22.

[6] The visible light band spans about 400–700 nm (*see* Ex. 1004, Fig. 6; Ex. 2073), and the ultraviolet light band falls below the visible band with a maximum wavelength of about 400 nm (*see* Ex. 1004, Fig. 6).

MASIMO 2035
Apple v. Masimo
IPR2024-00242

light-based sensors) to measure the wearer's heart rate. *See* Ex. 1005, code (54), 1:7–24, 1:36–56 (describing prior art monitor 100 shown in Fig. 1), 6:66–7:23 (describing Sarantos's monitor 200 shown in Fig. 2). Figure 22 of Sarantos is reproduced below.

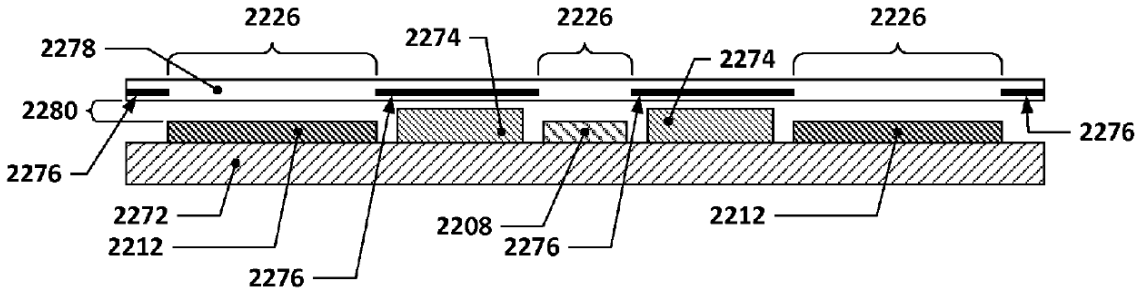

FIG. 22

Sarantos, Figure 22.

Figure 22 is a cross-sectional view of a PPG sensor. *See id.* at 6:52–54, 16:60–62. The PPG sensor has a central light source 2208 flanked by two photodetector elements 2212 disposed on substrate 2272, with walls 2274 disposed in between. *See id.* at 17:1–3, 17:26–32. In this way, the sensor "may be held against a person's skin, e.g., by being held in place with a strap" so light emitted by light source 2208 shines "into the person's skin, where the light then diffuses into the surrounding flesh and is then emitted back out of the person's skin and into the . . . photodetector elements 2212" to measure the person's heart rate. *Id.* at 17:16–25, 17:39–42.

Sarantos's PPG sensor includes window 2278 composed of a transparent material such as acrylic, "with an in-mold label 2276 embedded within it." *Id.* at 17:3–6. Label 2276 "may be black or otherwise rendered opaque to light to prevent light from entering or exiting the PPG sensor through the window 2278 except through window regions 2226." *Id.* at 17:6–10. Also, "other masking techniques, such as a painted or

silk-screened mask applied to the window 2278, may be used." *Id.* at 17:10–12. In this way, "label 2276 or the masking may prevent stray light from other sources, e.g., ambient light, from reaching . . . photodetector elements 2212 and affecting the heart rate signal obtained by the PPG sensor." *Id.* at 17:12–16.

3. Claim 1

Apple provides arguments and evidence in support of contending claim 1 is unpatentable as having been obvious over Iwamiya and Sarantos. *See* Pet. 6–19; Pet. Reply 3–7. Masimo opposes. *See* PO Resp. 1–4, 44–50; PO Sur-reply 2–3, 5–7 ("***First***" through "***Third***").

In overview, Apple relies on Iwamiya as disclosing the claimed subject matter except for the recited "surface comprising a *dark-colored coating*" (Ex. 1001, 15:47 (emphasis added)) positioned between the photodiodes and the tissue. *See* Pet. 8–19. Apple contends a person of ordinary skill in the art "would have been motivated to employ an in-mold label or other black or opaque material as disclosed by Sarantos in the light shielding frame 18 of Iwamiya to serve the purpose indicated by the component's name: shielding [Iwamiya's] photodiodes 9 from stray light, and thereby ensuring accuracy of the sensor," and for other reasons. *Id.* at 16–17.

Masimo disputes only whether a person of ordinary skill in the art would have been motivated to "add[] a 'dark-colored coating' from Sarantos to a 'light shielding frame' in Iwamiya," on the basis that "Apple fails to present any rational reason to do so." PO Resp. 2–3; *see id.* at 44–50.

MASIMO 2035
Apple v. Masimo
IPR2024-00242

We conclude Apple's contentions are supported by a preponderance of the evidence. To explain why, we first discuss the content of Iwamiya and Sarantos as they relate to the claimed invention (sub-sections (a) and (b)). Next, we address motivation to combine Iwamiya and Sarantos with a reasonable expectation of success (sub-section (c)). Lastly, we weigh all of the arguments and evidence to reach a conclusion as to obviousness (sub-section (d)).

a) Iwamiya vs. Claim 1

For the following reasons, we find Apple's undisputed reliance on Iwamiya as disclosing a physiological monitoring device that embodies much of the subject matter of claim 1 is supported by a preponderance of the evidence.

For claim elements [1.0] and [1.1], we find Iwamiya discloses a physiological monitoring device comprising a plurality of light-emitting diodes configured to emit light in a first shape. *See* Pet. 8–10 (citing Ex. 1004, code (57), Figs. 1, 3, 4, and 12, 5:54–66, 6:7–11, 6:32–39, 15:30–33); Ex. 1003 ¶¶ 31–34. To illustrate this, we reproduce below (on the next page) Apple's annotated version of Figure 3 of Iwamiya.

MASIMO 2035
Apple v. Masimo
IPR2024-00242

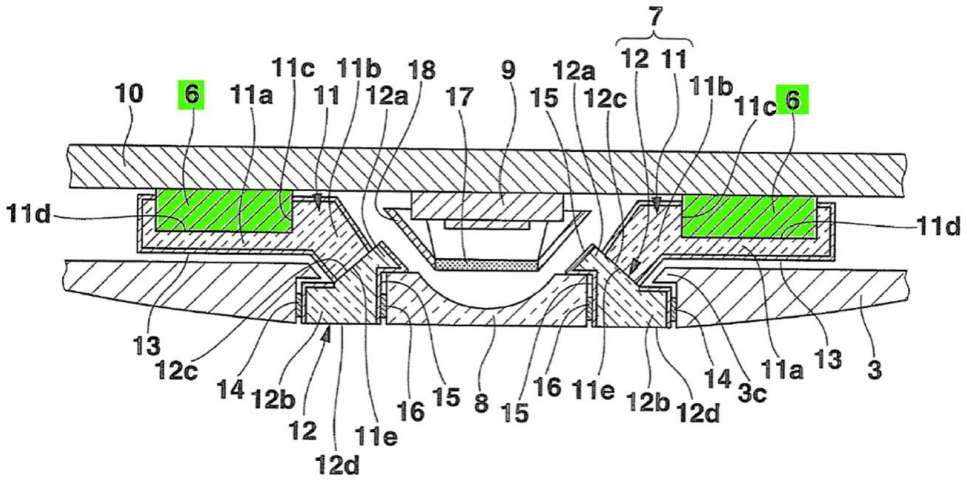

Iwamiya, Figure 3 (Annotated at Pet. 10).

Figure 3 is a cross-sectional view of Iwamiya's wristwatch case including a biological information detecting apparatus, with two light emitting units 6 (colored green by Apple). *See* Ex. 1004, 4:5–12, 6:7–10; Pet. 8–10; Ex. 1003 ¶¶ 31–34. Iwamiya indicates each "light emitting unit 6 is composed of a light emitting diode (LED)." Ex. 1004, 6:32–33; Pet. 9; Ex. 1003 ¶ 33. Further, as Apple and Dr. Anthony explain: "The emitted observation light is in a first shape characterized by the specific location of each light emitting unit, *e.g.*, the '3 o'clock' and '9 o'clock' positions as shown in" Figure 3. Pet. 10; Ex. 1003 ¶ 34; *see* Ex. 1004, 6:35–39.

For claim element [1.2], we find Iwamiya's device includes a material positioned between the light emitting diodes and the user's wrist tissue when the device is in use, and configured to change the first shape into a second shape projected towards the tissue. *See* Pet. 10–13 (citing Ex. 1004, Figs. 2 and 4, 6:7–14, 6:22–31, 6:40–45, 7:4–6, 7:61–65, 11:55–12:36); Ex. 1003 ¶¶ 35–37. To illustrate this, we reproduce below (on the next page) Apple's annotated version of Figure 4 of Iwamiya.

MASIMO 2035
Apple v. Masimo
IPR2024-00242

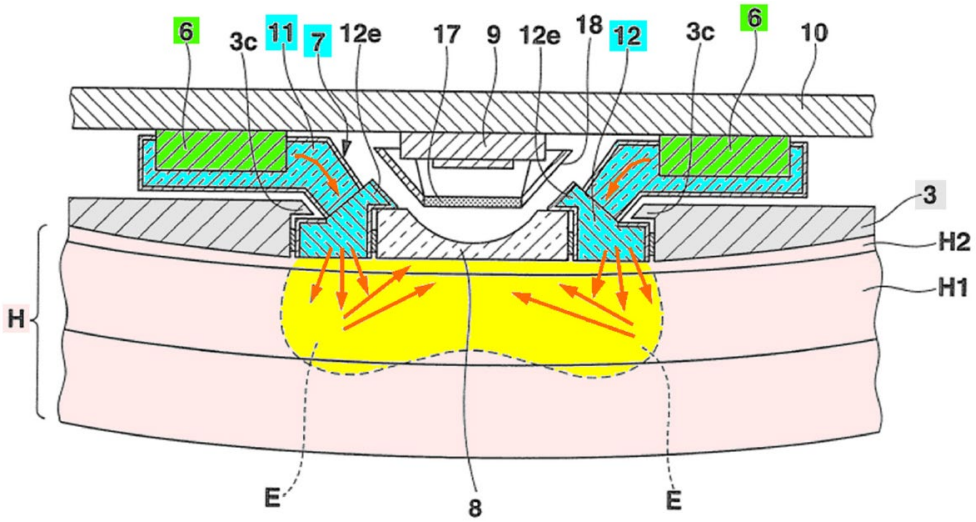

Iwamiya, Figure 4 (Annotated at Pet. 12).

Figure 4 is a cross-sectional view of Iwamiya's wristwatch device, including back cover 3 (colored gray by Apple), two light emitting units 6 (colored green by Apple) emitting light (arrows colored orange by Apple), and annular light guide unit 7 (colored blue by Apple) to receive the emitted light. *See* Ex. 1004, 4:5–16, 5:57–63, 6:7–14, 6:22–31; Pet. 10–13; Ex. 1003 ¶¶ 35–37. Figure 4 additionally illustrates Iwamiya's device "contact[ing] the skin [H] of an arm" (colored pink by Apple) which, based on Iwamiya's description of its device as a "wristwatch," a person of ordinary skill in the art would have understood to be the wearer's wrist. Ex. 1004, 4:5–16, 6:7–14; Pet. 13; Ex. 1003 ¶ 37.

Further, as Apple and Dr. Anthony explain: "Annular light guide unit 7 changes the shape of the light emitted from individual light emitting units 6 to *an annular shape (a second shape)* and causes the light to irradiate *an annular portion* of tissue." Pet. 12 (emphases added); Ex. 1003 ¶ 36. To illustrate this, we reproduce below (on the next page) Apple's annotated version of Figure 2 of Iwamiya.

MASIMO 2035
Apple v. Masimo
IPR2024-00242

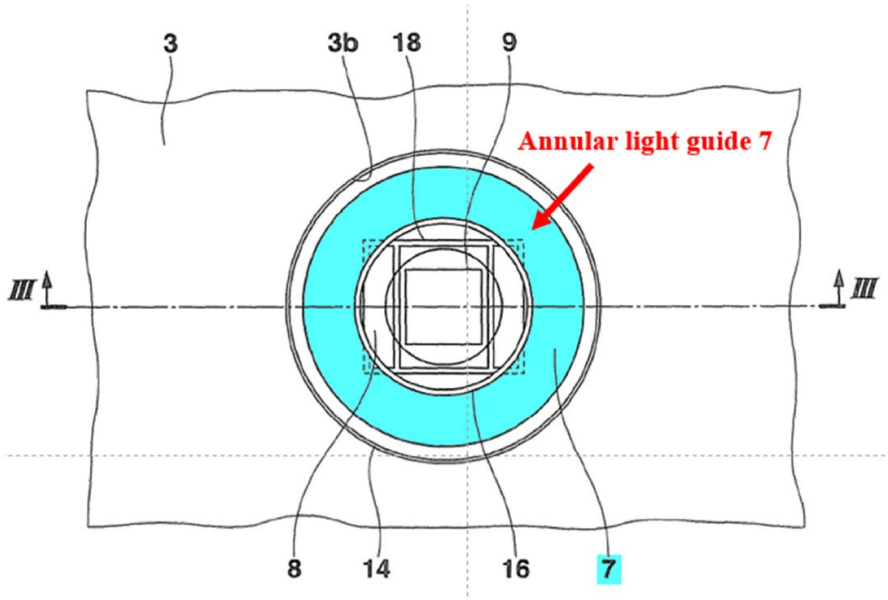

Iwamiya, Figure 2 (Annotated at Pet. 11).

Figure 2 is a plan view of back cover 3 of Iwamiya's wristwatch device, illustrating the annular shape of light guide unit 7 where it interfaces with the user's wrist tissue (colored blue by Apple). *See* Ex. 1004, 4:9–10, 5:54–63, 6:10–14, 6:26–31, 6:40–45, 7:4–6, 7:61–65, 11:55–12:2; Pet. 11–12; Ex. 1003 ¶¶ 35–36. Apple's additional annotations to Figure 4 reproduced above show how annular light guide unit 7 emits light (arrows colored orange by Apple) into wrist tissue H (colored pink by Apple) to form "annular irradiation area E" (colored yellow by Apple). Ex. 1004, 6:14–17; Pet. 12; Ex. 1003 ¶ 36. Thus, we find Iwamiya's annular light guide unit 7 corresponds to the shape-changing material recited in claim 1.

In particular, Iwamiya's unit 7 changes the light emitted by units 6 from a first shape into a second shape that is different from the first shape, and does not merely change a size of the same shape, per Masimo's proffered claim construction of claim 1. *See* PO Resp. 11–16. Here, the first shape is the location of Iwamiya's two units 6 at the 3 o'clock and

MASIMO 2035
Apple v. Masimo
IPR2024-00242

9 o'clock positions of the wristwatch. *See* Ex. 1004, Figs. 1–4, 4:5–16, 6:31–39. The second shape is the annular shape of Iwamiya's unit 7 where it interfaces with the wearer's wrist tissue. *See id.* at Fig. 2, 4:9–10, 6:10–14, 6:40–45, 7:4–6, 7:61–65, 11:55–12:2.

For claim element [1.3], we find Iwamiya's device includes a plurality of photodiodes to detect light after it passes through the user's tissue, and configured to output a signal responsive to the detected light. *See* Pet. 13–14 (citing Ex. 1004, Fig. 4, 8:20–23, 8:61–9:7, 9:28–32, 14:36–41); Ex. 1003 ¶¶ 38–39. To illustrate this, we reproduce below Apple's annotated excerpt from Figure 4 of Iwamiya.

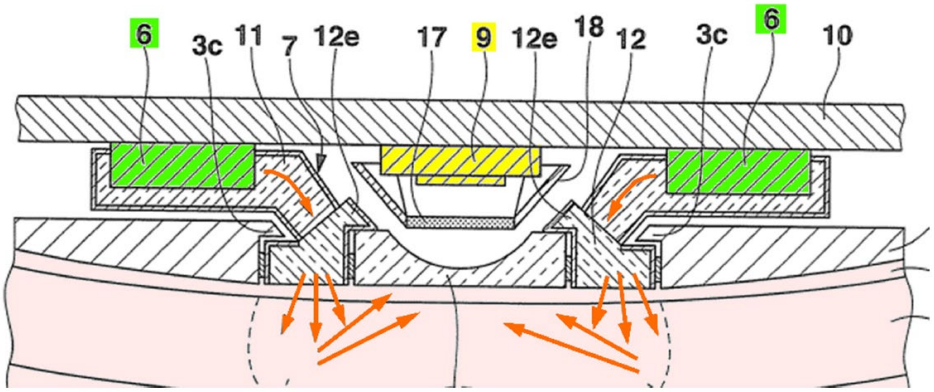

Iwamiya, Figure 4 (Excerpt, Annotated at Pet. 14).

Figure 4 is a cross-sectional view of Iwamiya's wristwatch device, including two light emitting units 6 (colored green by Apple) emitting light (arrows colored orange by Apple) to enter the user's skin (colored pink by Apple), which is back-scattered to be detected by light receiving unit 9 (colored yellow by Apple). *See* Ex. 1004, 6:7–21, 8:20–23; Pet. 13–14; Ex. 1003 ¶¶ 38–39. Further, light receiving unit 9 comprises a plurality of photodiodes, and outputs a signal responsive to the detected light. *See*

MASIMO 2035
Apple v. Masimo
IPR2024-00242

Ex. 1004, 8:20–23 (stating unit 9 "performs photoelectric conversion" and "is composed of a silicon photo diode"), 8:67–9:3 ("[A]n I/V converting circuit 22 . . . converts a current signal output from the light receiving unit 9 . . . into a voltage signal."), 14:36–41 (stating "plural light receiving units 9 may be" used).

For claim elements [1.4] and [1.5], we find Iwamiya's device includes optical filter 17 mounted within an opening of light shielding frame 18, positioned between light receiving unit 9 and the wearer's skin H, to allow a portion of light reflected from the wearer's tissue H to pass through frame 18. *See* Pet. 14–15, 17–18 (citing Ex. 1004, Fig. 4, 8:38–47); Ex. 1003 ¶¶ 40, 43–44. To illustrate this, we reproduce below Apple's annotated excerpt from Figure 4 of Iwamiya.

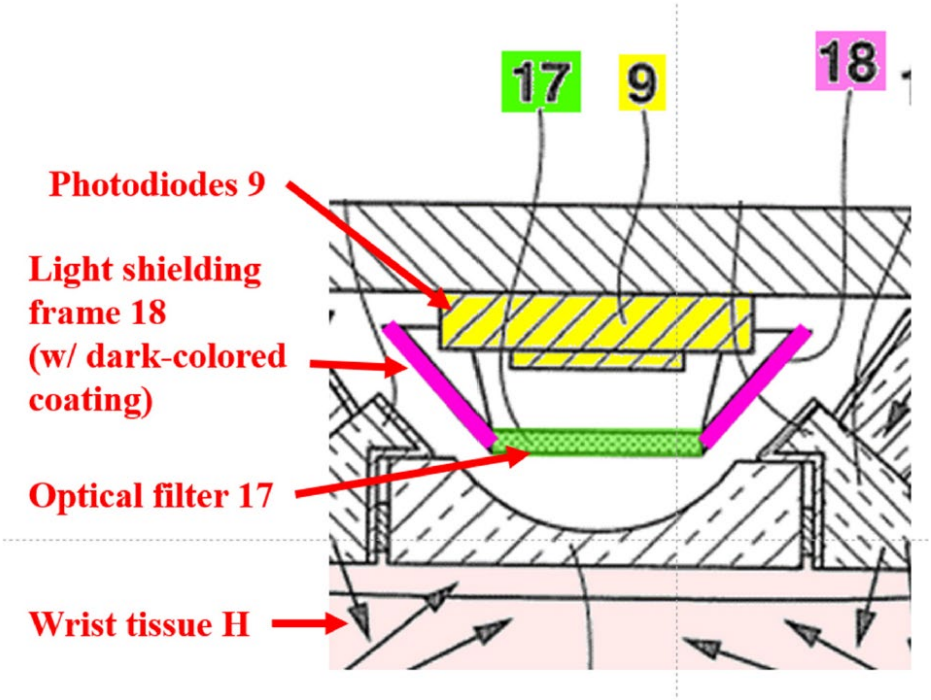

Iwamiya, Figure 4 (Excerpt, Annotated at Pet. 17).

MASIMO 2035
Apple v. Masimo
IPR2024-00242

Figure 4 is a cross-sectional view of Iwamiya's wristwatch device, and Apple's excerpt focuses on light receiving unit 9 (colored yellow by Apple) disposed above the user's wrist tissue H (colored pink by Apple), along with light shielding frame 18 (colored purple by Apple) and optical filter 17 mounted on frame 18 (colored green by Apple).[7] *See* Ex. 1004, 6:17–21, 8:38–42; Pet. 14–15, 17–18; Ex. 1003 ¶¶ 40, 43. Filter 17 allows a portion of light reflected from tissue H to pass through frame 18 to reach light receiving unit 9. Ex. 1004, 8:42–57, 11:3–8, 13:1–23; Pet. 17–18; Ex. 1003 ¶ 44.

For claim element [1.6], we find Iwamiya's device includes a light block that prevents a portion of light emitted from light emitting units 6 from reaching light receiving unit 9 without first reaching tissue H. *See* Pet. 18–19 (citing Ex. 1004, Fig. 3, 6:62–7:3, 7:41–49); Ex. 1003 ¶ 45.[8] To illustrate this, we reproduce below (on the next page) Apple's annotated version of Figure 3 of Iwamiya.

---

[7] Apple's annotations state frame 18 includes a "dark-colored coating," which is Apple's proposed addition to Iwamiya's express disclosure, and is opposed by Masimo as discussed below in Section III.D.3(c).

[8] Our citation to Exhibit 1003 here includes an unnumbered paragraph and an annotated illustration on page 24, above paragraph 45. Also, the Petition's subsequent citations to Exhibit 1003 appear to treat this unnumbered paragraph as paragraph 45. *Compare, e.g.*, Pet. 18–19 (discussing Limitation [1.6], and citing Exhibit 1003 ¶¶ 45–46), *with* Ex. 1003, pgs. 24–25 (discussing Limitation [1.6] in an unnumbered paragraph and ¶ 45). In this Decision, we refer to the actual paragraph numbers used in Exhibit 1003.

MASIMO 2035
Apple v. Masimo
IPR2024-00242

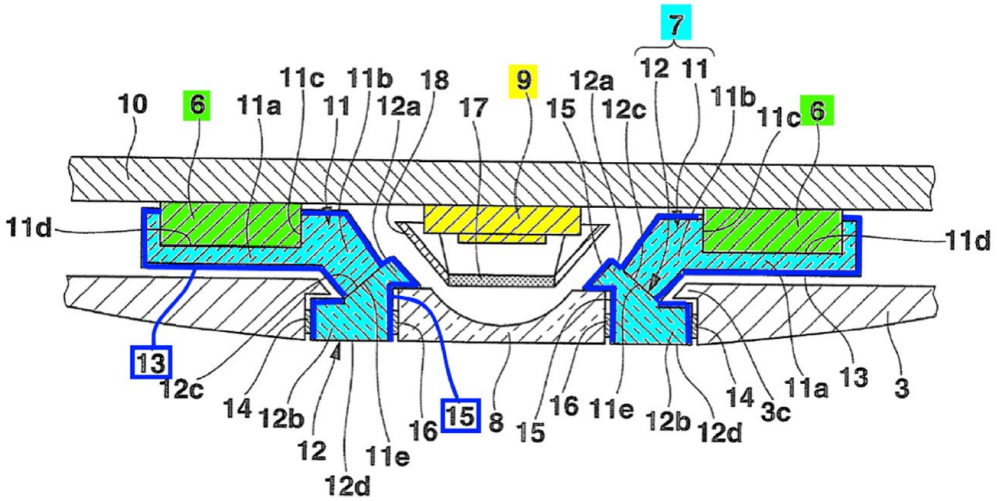

Iwamiya, Figure 3 (Annotated at Pet. 18).

Figure 3 is a cross-sectional view of Iwamiya's wristwatch device, including two light emitting units 6 (colored green by Apple), annular light guide unit 7 (colored light blue by Apple) with reflection layers 13 and 15 (colored dark blue by Apple), and light receiving unit 9 (colored yellow by Apple). *See* Ex. 1004, 6:7–21, 6:62–7:3, 7:41–49; Pet. 18–19; Ex. 1003 ¶ 45. Reflection layers 13 and 15 prevent observation light from leaking out of annular light guide unit 7 except where the bottom surface of diffusion ring portion 12 contacts skin H. *See* Ex. 1004, 6:62–7:3, 7:41–49, 8:14–19. Thus, we find Iwamiya's layers 13 and 15 correspond to the light block recited in claim 1.

For claim element [1.7], we find Iwamiya's device includes a processor to receive and process signals outputted from light receiving unit 9, to determine a physiological parameter of the user responsive to the signals. *See* Pet. 19 (citing Ex. 1004, 8:61–9:7, 9:36–43); Ex. 1003 ¶ 46. In particular, Figure 10 of Iwamiya illustrates processor 20 that determines the

MASIMO 2035
Apple v. Masimo
IPR2024-00242

user's "pulse wave," which Dr. Anthony equates to "heart rate." *See* Ex. 1004, Fig. 10, 8:58–9:43; Ex. 1003 ¶ 46.

Our foregoing findings, based on the cited Iwamiya disclosures, Apple's contentions, and Dr. Anthony's testimony, are unopposed in the record presented. Thus, we find a preponderance of the evidence establishes Iwamiya discloses the subject matter of claim 1 which Apple asserts it discloses.

b) Sarantos vs. Claim 1

We find Apple's undisputed reliance on Sarantos as disclosing "a wrist-worn reflectance-based physiological sensor that has a *dark-colored coating* 2276 to block light" is supported by a preponderance of the evidence. Pet. 15–16 (emphasis added) (citing Ex. 1005, Fig. 22, 5:55–58, 17:1–25); Ex. 1003 ¶ 41. In particular, Sarantos discloses a fitness monitor worn on a user's wrist like a wristwatch, which utilizes PPG sensors to measure the wearer's heart rate. *See* Ex. 1005, code (54), 1:7–24, 6:66–7:23 (describing monitor 200 shown in Fig. 2). In one embodiment, Sarantos's PPG sensor has window 2278 composed of a transparent material such as acrylic, "with an in-mold label 2276 embedded within it" that "may be black or otherwise rendered opaque to light to prevent light from entering or exiting the PPG sensor through the window 2278 except through window regions 2226." *See id.* at Fig. 22, 16:60–62, 17:3–10. Sarantos further provides that "other masking techniques, such as a painted or silk-screened mask applied to the window 2278, may be used." *Id.* at 17:10–12. In this way, "label 2276 or the masking may prevent stray light from other sources,

MASIMO 2035
Apple v. Masimo
IPR2024-00242

e.g., ambient light, from reaching . . . photodetector elements 2212 and affecting the heart rate signal obtained by the PPG sensor." *Id.* at 17:12–16.

Our foregoing findings, based on the cited Sarantos disclosures, Apple's contentions, and Dr. Anthony's testimony, are unopposed in the record presented. Thus, we find a preponderance of the evidence establishes Sarantos discloses the subject matter of claim 1 which Apple asserts it discloses.

c) Motivation for Combining Iwamiya and Sarantos with a Reasonable Expectation of Success

(i) Petitioner's Contentions (in the Petition)

In the Petition, Apple argues a person of ordinary skill in the art "would have been motivated to employ an in-mold label or other black or opaque material as disclosed by Sarantos in the light shielding frame 18 of Iwamiya to serve the purpose indicated by the component's name: shielding [Iwamiya's] photodiodes 9 from stray light, and thereby ensuring accuracy of the sensor." Pet. 16 (citing Ex. 1004, Fig. 4, 8:38–47; Ex. 1005, Fig. 22, 5:55–58, 17:1–25); Ex. 1003 ¶ 42. In support, Apple asserts and Dr. Anthony testifies that a person of ordinary skill in the art "would have understood that a dark-colored coating, such as that described by Sarantos, would have served this purpose by not only blocking light but also by limiting reflections, which could lead to stray light being incident on the photodiodes 9." Pet. 16; Ex. 1003 ¶ 42.

Dr. Anthony further testifies that "dark-colored coatings and materials were well-known to effectively block light," and a person of ordinary skill in

MASIMO 2035
Apple v. Masimo
IPR2024-00242

the art "would have known that a light shielding frame 18 or holder portion 43 as disclosed by Iwamiya can be of various proportions, and a thin surface is a coating." Ex. 1003 ¶ 42 (citing Ex. 1005, 17:1–10); *see* Pet. 16. Apple and Dr. Anthony conclude that "[b]ecause using dark-colored coatings in light blocks was so well-known, and Iwamiya and Sarantos are both wrist-worn reflectance-based physiological sensors," a person of ordinary skill in the art "would have reasonably understood the combination of Iwamiya with Sarantos to be successful with no unexpected results." Pet. 16–17; Ex. 1003 ¶ 42.

(ii) Patent Owner's Opposition

Masimo argues "Apple fails to present any rational reason" or other motivation for adding a dark-colored coating to Iwamiya's light shielding frame 18. PO Resp. 2–3, 44. Masimo asserts "Apple assumes" Iwamiya's frame 18 "could not shield light itself" which "ignores that Iwamiya had already solved" the problem of shielding light receiving unit 9 from unwanted light via frame 18. *Id.* at 3, 44–45 ("Apple's proposed combination ignores Iwamiya's teachings to ***assume a problem in Iwamiya that did not exist***."); Ex. 2002 ¶¶ 92–94; Ex. 2070 ¶¶ 58–59.

Masimo asserts Apple's argument "that a dark-colored coating would 'limit[] reflections, which could lead to stray light being incident on the photodiodes 9'" is not supported persuasively by evidence. PO Resp. 45 (quoting Pet. 16). Masimo argues Dr. Anthony's testimony unpersuasively "repeats the same argument without further analysis or evidence." *Id.* (citing Ex. 1003 ¶ 42; *Xerox Corp. v. Bytemark, Inc.*, IPR2022-00624, Paper 9 at 15

MASIMO 2035
Apple v. Masimo
IPR2024-00242

(PTAB 2022) (precedential)). That is because, in Masimo's view as supported by Dr. Duckworth's testimony, "by design, Iwamiya did not have an issue with 'stray light' that could have been incident on the photodiodes." *Id.*; Ex. 2070 ¶¶ 58, 61–62.

Masimo moreover argues "Apple does not even explain ***where*** on Iwamiya's light shielding frame the in-mold label [from Sarantos] would be placed" such as on the exterior surface or the interior surface of the frame, "or how such a combination would reduce reflections." PO Resp. 45–46 (annotating Ex. 1004, Fig. 4, to identify the exterior and interior surfaces of frame 18); Ex. 2070 ¶ 61. Masimo contends "***neither*** placement" (exterior or interior surface) would benefit Iwamiya's sensor.[9] PO Resp. 46; Ex. 2070 ¶ 61. That is because, according to Masimo, "Iwamiya repeatedly teaches that light shielding should be accomplished using *reflective* materials," not a dark-colored (and therefore light *absorptive*) coating. PO Resp. 3 (emphasis added), 46–47 (citing Ex. 1004, 6:62–7:3, 7:41–49, 18:61–65, 28:64–29:1, 39:20–24); Ex. 2002 ¶¶ 96–97; Ex. 2070 ¶¶ 59–60.

Masimo relatedly concludes "Apple's argument would require ignoring Iwamiya's repeated teachings and proceeding ***against*** them." PO Resp. 47; Ex. 2070 ¶ 60. Specifically, Masimo asserts Iwamiya's frame 18 is reflective in order to maximize the amount of light that reaches and passes through filter 17 to be detected by light receiving unit 9, whereas

[9] Apple's Reply focuses on applying a dark-colored coating to the exterior surface of frame 18. *See, e.g.*, Pet. Reply 4–5. We therefore do too, and we do not discuss Masimo's arguments concerning a dark-colored coating on the interior surface. *See, e.g.*, PO Resp. 47 (line 13) – 49 (line 6).

MASIMO 2035
Apple v. Masimo
IPR2024-00242

a dark-colored coating on the exterior surface of frame 18 "would degrade Iwamiya's sensor by reducing the opportunity for light from the measurement site to be detected." PO Resp. 47, 49 (lines 8–12); Ex. 2070 ¶¶ 62–63. Apple's proposed addition of a dark-colored coating, in Masimo's view, "would absorb light and thus reduce the measured optical signal" in Iwamiya, whereas "Iwamiya repeatedly discusses a problem with weak signals and provides a sensor design incorporating reflective materials that addresses the weak signal problem," thereby negating any motivation for using a dark-colored coating. PO Resp. 49; Ex. 2070 ¶ 63.

Masimo asserts "Sarantos applies dark-colored material to a transparent or translucent surface"—"a completely different design than" Iwamiya's frame 18, which is neither transparent nor translucent because it "uses metal that blocks and reflects light." PO Resp. 49 (citing Ex. 1005, 17:1–12); Ex. 2070 ¶¶ 64–65. Masimo concludes "[a]dding a dark-colored material would not change Iwamiya's light-shielding ability but would compromise the ability to redirect light back towards the filter," as discussed above. PO Resp. 49–50.

(iii) Petitioner's Reply

Apple replies that it "has never disputed that Iwamiya's original frame 18 was intended to block unwanted light from reaching the photodiodes" in light receiving unit 9. Pet. Reply 3 (citing Ex. 1004, 8:38–42). Apple asserts its position has always been that Iwamiya "lacks express disclosure of *materials* that would be suitable to achieve the desired 'light shielding' function of frame 18," thereby leaving "the selection of a

MASIMO 2035
Apple v. Masimo
IPR2024-00242

suitable material for frame 18" to a person of ordinary skill in the art. *Id.* (emphasis added) (citing Pet. 15–17; Ex. 1059, 88:12–94:8). Apple adds that "[t]he use of dark-colored coatings for light shielding as taught in Sarantos was common practice well before the '745 Patent." *Id.* at 4 (citing Ex. 1005, 17:1–25; Ex. 1013, 96–97, 111; Ex. 1067, 9:58–10:23); Ex. 1042 ¶ 7.

As an example, Apple asserts it would have been obvious to apply a dark, light-absorbing coating to the *exterior* of frame 18, to "ensure light is blocked from reaching the photodiodes except through the opening permitted by optical filter 17." Pet. Reply 4–5 (annotating Ex. 1004, Fig. 4, to identify where the coating would be added) (citing Ex. 1005, 17:1–25); Ex. 1042 ¶ 8. In particular, according to Apple, a person of ordinary skill in the art would have known "that light-shielding materials must either (1) absorb or (2) reflect light," and would have selected a light-absorbing material for frame 18 "to absorb the broadest spectrum of light." Pet. Reply 5–6 (citing Ex. 1059, 94:14–95:10; *KSR*, 550 U.S. at 421 ("When . . . there are a finite number of identified, predictable solutions, a person of ordinary skill has good reason to pursue the known options within his or her technical grasp.")); Ex. 1042 ¶ 8.

Apple disputes Masimo's argument that a person of ordinary skill in the art would have selected *only* a *reflective* material for Iwamiya's frame. *See* Pet. Reply 6–7 (citing PO Resp. 46–50); Ex. 1042 ¶¶ 9–14. Apple asserts a dark-colored *absorptive* coating "would be preferable to a reflective material for shielding light with Iwamiya's frame 18 since the absorptive material would *reduce* reflections and light scatter in the empty space

MASIMO 2035
Apple v. Masimo
IPR2024-00242

surrounding frame 18." Pet. Reply 6; Ex. 1042 ¶ 9. Dr. Anthony testifies in support that an absorptive material would be more effective than a reflective material "at reducing light scatter" within the space surrounding frame 18, which "would have different path lengths that could increase optical interference and reduce measurement accuracy." Ex. 1042 ¶¶ 9, 12 (citing Ex. 1013, 69, 96–97; Ex. 1067, 1:65–2:16, 9:58–10:23). According to Apple, Dr. Duckworth "not only failed to address this issue but refused even to discuss it during his deposition." Pet. Reply 6 (citing Ex. 1059, 95:11–96:17). Apple adds that "even if design tradeoffs exist between the selection of a dark-colored coating and a reflective material, these tradeoffs would only render each option obvious—not preclude obviousness of the first option as Masimo would have it." *Id.* at 7 (citations omitted).

Apple acknowledges Iwamiya employs reflective layers 13 and 15 in light guiding ring 11 and diffusion ring 12, but Apple asserts "[r]ings 11, 12 are distinct from frame 18, and the reflective layers 13, 15 serve far different functions of preventing light leakage to an exterior of rings 11, 12 and guiding light through rings 11, 12 than the light shielding function of frame 18." *Id.* at 6–7 (citing Ex. 1004, 6:10–14, 6:62–7:3, 7:14–24, 7:41–49, 10:44–49, 11:55–12:36); Ex. 1042 ¶ 10.

Apple also acknowledges that Iwamiya discloses holder portion 43 which is reflective, but Apple asserts holder portion 43 is not utilized in the same embodiment as light shielding frame 18, and "differences in the structures of these embodiments confirms that frame 18 need not have a reflective exterior." Pet. Reply 7 (citing Ex. 1004, Figs. 4 and 13, 18:61–65, 28:64–29:1, 39:20–24; Ex. 1059, 88:1–94:8); Ex. 1042 ¶¶ 11–13.

MASIMO 2035
Apple v. Masimo
IPR2024-00242

Apple finally asserts Masimo made substantially similar arguments during the ITC Investigation concerning Apple's proffered motivation for modifying Iwamiya's device to employ a dark-colored coating, which were rejected by the ITC. *See* Pet. Reply 3 n.2 (citing Ex. 1033, 226–228).

(iv) Patent Owner's Sur-reply

Masimo argues none of Apple's references "apply a dark coating to anything like Iwamiya's light shield/filter design." PO Sur-reply 5; Ex. 2100 ¶ 16. In Masimo's view, this is because a person of ordinary skill in the art would have understood it is "desirable to funnel as much of the 'observation light' entering the cavity [underneath Iwamiya's filter 17 and frame 18] to the detector [9] as possible." PO Sur-reply 5–6 (citing Ex. 1004, Fig. 4, 7:50–61, 8:20–23); Ex. 2100 ¶¶ 16–17. Masimo maintains Apple's proposed addition of a dark-colored coating to the underside of frame 18 would reduce the amount of light within that cavity from reaching the detector, thereby undesirably reducing the signal. PO Sur-reply 5 (citing Pet. Reply 6); Ex. 2100 ¶¶ 17, 23. Masimo agrees with Apple that "Iwamiya does not expressly discuss the material for '***light shielding*** frame 18'" in the embodiment of Figures 1–4, but Masimo contends Iwamiya "specifically discloses 'metal with a ***light shielding*** property'" for holder portion 43 in the different embodiment of Figures 11–14. PO Sur-reply 5–6 (citing Ex. 1004, 8:38–42, 18:61–64); Ex. 2100 ¶¶ 13–14. Masimo concludes a person of ordinary skill in the art "would naturally use that disclosed material with the light shielding property for the light shielding frame [18] to achieve" Iwamiya's goals. PO Sur-reply 6; Ex. 2100 ¶¶ 13–14.

MASIMO 2035
Apple v. Masimo
IPR2024-00242

Further according to Masimo, Dr. Anthony's testimony that a dark-colored coating would advantageously reduce signal noise is not supported persuasively by evidence. *See* PO Sur-reply 6–7 (citing Pet. Reply 6; Ex. 1042 ¶¶ 9, 12). Masimo asserts Dr. Anthony's evidence discusses "scattered/reflected light in ***tissue***" which "is a completely different phenomenon and is inapplicable to Iwamiya's sensor cavity because there is no tissue or blood to absorb and change the signal." *Id.*; Ex. 2100 ¶¶ 18–19. Dr. Anthony's evidence also relates to "detectors receiving emitted light which bypassed the tissue (light piping)," which Masimo asserts Iwamiya already addresses with reflection layers 13 and 15, and optical filter 17. Sur-reply 6–7; Ex. 2100 ¶¶ 19–20.

Masimo further argues Apple proposes to "add a coating to block light from bypassing Iwamiya's optical filter . . . but later inconsistently proposes removing Iwamiya's filter altogether, thereby eliminating the alleged reason for the coating." PO Sur-reply 7 (citing Pet. Reply 4, 13–14); Ex. 2100 ¶¶ 21–22. Masimo asserts this alleged inconsistency "reveals [Apple] relied on hindsight analysis to salvage an inoperable combination." PO Sur-reply 7.

(v) Analysis and Determination as to Motivation to Combine with a Reasonable Expectation of Success

For the following reasons, we find a preponderance of the evidence establishes that a person of ordinary skill in the art would have been motivated to combine Iwamiya and Sarantos, by using a dark-colored coating as taught by Sarantos on the exterior surface of Iwamiya's frame 18, with a reasonable expectation of success.

MASIMO 2035
Apple v. Masimo
IPR2024-00242

First, we agree with Apple's position that Iwamiya provides no detail concerning the *structural* configuration of frame 18, apart from the illustrations of frame 18 in Figures 1–4. Iwamiya simply identifies the frame as "a light shielding frame," which is a functional description apart from the word "frame." Ex. 1004, 8:38–47. We do not discern, and Masimo does not cite, any disclosure in Iwamiya concerning a specific material or structure of frame 18 that achieves the light shielding function. Thus, Iwamiya leaves it to a person of ordinary skill in the art to choose a material or structure to incorporate within frame 18 to shield light away from reaching light receiving unit 9 without passing through optical filter 17. *See id.* at 8:38–57, Fig. 4. We find Apple's reliance on Sarantos as disclosing a suitable light-shielding material or structure for use with Iwamiya's frame 18 is invited by Iwamiya's disclosure, rather than assuming a problem in Iwamiya that does not exist as Masimo and Dr. Duckworth would have it. *See, e.g.*, Ex. 2002 ¶¶ 92–95, 98; Ex. 2070 ¶¶ 59, 65.

Sarantos in turn provides a light-based sensor incorporating photodetector elements 2212 shielded from stray light by in-mold label 2276, or alternatively by a painted or silk-screened mask. *See* Ex. 1005, Fig. 22, 17:1–25. In particular, these structures "may be black or otherwise rendered opaque to light to prevent light from" reaching photodetector elements 2212 except through window regions 2226, such as "stray light" from sources other than light source 2208. *Id.* at Fig. 22, 17:6–16. That function is similar to the function of Iwamiya's light shielding frame 18 shielding light away from reaching light receiving unit 9 without passing through optical filter 17, discussed above. Further, Masimo

MASIMO 2035
Apple v. Masimo
IPR2024-00242

does not dispute that one or more of Sarantos's light-shielding structures correspond to a "dark-colored coating" per claim 1.

We conclude that Iwamiya's leaving the selection of a light-shielding material or structure to incorporate within frame 18 open to the designer's choice, coupled with Sarantos's disclosure of a dark-colored coating as performing a light-shielding function, provides ample motivation for Apple's combination. Thus, we are persuaded by Dr. Anthony's testimony to this effect.[10] *See* Ex. 1003 ¶¶ 40–42; Ex. 1042 ¶¶ 7–8; *KSR*, 550 U.S. at 417 ("[A] court must ask *whether the improvement is more than the predictable use of prior art elements according to their established functions*." (emphasis added)). "A person of ordinary skill is also a person of ordinary creativity, not an automaton," and "in many cases a person of ordinary skill will be able to fit the teachings of multiple patents together like pieces of a puzzle." *KSR*, 550 U.S. at 420–21.

We are not persuaded by Dr. Duckworth's testimony that Dr. Anthony's motivation is negated by the fact that Sarantos's light-absorptive material is used to block stray light such as ambient light, whereas Iwamiya's optical filter 17 already performs that function by removing ambient light. *See* Ex. 2002 ¶ 95; Ex. 2070 ¶¶ 61, 64–65. There is no point to Iwamiya's optical filter 17 removing ambient light so that it

[10] The disclosures of Iwamiya and Sarantos provide sufficient evidentiary support for Dr. Anthony's conclusion. We do not rely on his additional citation to Exhibits 1013 and 1067 as allegedly showing "the use of such a dark-colored coating was common practice well before the '745 Patent." Ex. 1042 ¶ 7; *see* Ex. 2100 ¶ 16 (Dr. Duckworth disagrees).

MASIMO 2035
Apple v. Masimo
IPR2024-00242

cannot reach light receiving unit 9, unless Iwamiya's frame 18 also shields ambient light from reaching unit 9 by bypassing filter 17. Also, the fact that Sarantos's dark-colored coating is disposed within a translucent or transparent material (*see* Ex. 2070 ¶ 64; Ex. 2100 ¶ 16) does not negate Apple's motivation, because Iwamiya does not limit the material or structure to be used in light shielding frame 18, as discussed above.

We acknowledge Masimo's point that Iwamiya discloses, in the embodiment of Figures 11–14, holder portion 43 for light receiving unit 33, wherein holder portion 43 is "formed of a metal with a light shielding property, such as aluminum, and its surface is subjected to aluminate treatment to have a reflection function" in order to "optically protect[]" light receiving element 33a. Ex. 1004, Fig. 14, 18:61–65. However, holder portion 43 is a different structure than light shielding frame 18, as Iwamiya demonstrates by using different reference numerals 18 and 43 in the respective figures, whereas "the same components . . . are denoted by the same references numerals" including scattered light taking unit 8 and optical filter 17. *Id.* at 14:55–67, 18:1–4, 18:51–60; Ex. 1042 ¶¶ 11–12 (Dr. Anthony testifying these are different embodiments); Ex. 1059, 88:12–91:20 (Dr. Duckworth agreeing these are different embodiments). Thus, Masimo's and Dr. Duckworth's attempt to limit the *light shielding* function of frame 18 to using a *reflective* surface as in holder portion 43 is not persuasive. *See, e.g.*, Ex. 2002 ¶¶ 96–98; Ex. 2070 ¶¶ 59–60; Ex. 2100 ¶ 13–15.

At best for Masimo and Dr. Duckworth, Iwamiya's description of holder portion 43 establishes that a reflective material is one example of a

MASIMO 2035
Apple v. Masimo
IPR2024-00242

structure that may be used in frame 18 to perform its light shielding function. *See, e.g.*, Ex. 2002 ¶¶ 96–98; Ex. 2070 ¶¶ 59–60; Ex. 2100 ¶ 13–15. Iwamiya does not teach away from using an absorptive material in frame 18 to perform light shielding as disclosed by Sarantos, instead of a reflective material as in Iwamiya's other embodiment, because Iwamiya does not criticize, discredit, or otherwise discourage light absorption by frame 18. *See* Ex. 1004, 18:61–65, 28:64–29:1, 39:20–24 (cited at Ex. 2002 ¶ 96 and Ex. 2070 ¶ 59); *In re Fulton*, 391 F.3d 1195, 1201 (Fed. Cir. 2004). For example, Iwamiya simply indicates that holder portion 43 may be made reflective in order to optically protect light receiving unit 33, without identifying any particular benefit achieved by using a light-reflecting material (specifically) for that purpose, much less any particular detriment caused by using a light-absorptive material for that purpose. *See* Ex. 1004, 18:61–65, 28:64–29:1, 39:20–24.

Dr. Anthony and Dr. Duckworth disagree as to the relative advantages and disadvantages of using a light-absorptive material versus a light-reflecting material as Iwamiya's light shield. Dr. Anthony testifies that a light-absorptive material in Iwamiya would beneficially "limit[] reflections, which could lead to stray light" reaching light receiving unit 9 (Ex. 1003 ¶ 42), and further "would have been more effective than a reflective material" by reducing light scattering underneath frame 18 which "could increase optical interference and reduce measurement accuracy" (Ex. 1042 ¶¶ 9, 12–13). Dr. Duckworth objects that Dr. Anthony's foregoing testimony constitutes improper hindsight relying on '745 patent disclosures (not prior art disclosures), and that using a light-reflecting

MASIMO 2035
Apple v. Masimo
IPR2024-00242

material would beneficially redirect light towards optical filter 17 to increase the signal strength versus a light-adsorptive material. Ex. 2002 ¶¶ 99–100 (citing Ex. 1001, 8:59–9:10, 9:34–36); Ex. 2070 ¶¶ 61–63; Ex. 2100 ¶¶ 16–20, 23.

We need not delve into these disagreements, because the Federal Circuit's "precedent. . . does not require that the motivation be the *best* option, only that it be a *suitable* option from which the prior art did not teach away." *PAR Pharm., Inc. v. TWI Pharms., Inc.*, 773 F.3d 1186, 1197–98 (Fed. Cir. 2014). As discussed above, Sarantos indicates a light-adsorptive material is a suitable option for performing the light-shielding function of Iwamiya's frame 18, even if a light-reflective material might be a better option. Also as discussed above, Iwamiya does not teach away from using a light-absorptive material.

Part of Apple's combination is to retain Iwamiya's optical filter 17, rather than removing the filter. *See* Pet. 14–17 (not specifying that the combination includes removing filter 17); Pet. Reply 4–5 (stating the combination "ensure[s] light is blocked from reaching the photodiodes *except through the opening permitted by optical filter* 17 (emphasis added)); *id.* at 6 (referring again to filter 17 being in the combination); *id.* at 13–14 (discussing obviousness of dependent claim 9, and referring to "*adapting the optical filter to pass both red and infrared light* (or implementing an oximeter without such a filter)" (emphasis added)). Thus, Apple's arguments are not inconsistent in this regard, as Masimo would have it.

We moreover agree with Dr. Anthony's testimony that a person of ordinary skill in the art would have had a reasonable expectation of success

MASIMO 2035
Apple v. Masimo
IPR2024-00242

in placing a dark-colored coating on the exterior surface of Iwamiya's frame 18 to function as a light shield. *See, e.g.*, Ex. 1003 ¶ 42; Ex. 1042 ¶¶ 7–8. Masimo does not oppose, and Dr. Duckworth does not disagree with, this testimony.

We finally note that our foregoing findings and conclusions concerning motivation to combine Iwamiya and Sarantos with a reasonable expectation of success are not inconsistent with the decisions rendered during the ITC Investigation. *See* Ex. 1033, 226–228 (ITC Initial Determination, finding "the evidence clearly and convincingly shows a reason to use a dark-colored coating for the 'light shielding frame' in Figure 4" of Iwamiya, such as "to improve the light-shielding properties," and "one of ordinary skill in the art would have expected success in implementing this change"); Ex. 2104, 51–53 (ITC Opinion, affirming the Initial Determination "regarding *prima facie* obviousness," and affirming-in-part and reversing-in-part regarding objective indicia of nonobviousness).

d) Conclusion as to Claim 1

Iwamiya anticipates the invention of claim 1, except Iwamiya does not disclose that its light shielding frame 18 has a dark-colored coating to perform its light shielding function. A person of ordinary skill in the art would have been motivated to combine Iwamiya and Sarantos, by using a dark-colored coating as taught by Sarantos on the exterior surface of Iwamiya's frame 18, with a reasonable expectation of success. Therefore, we conclude Apple has shown by a preponderance of the evidence that

claim 1 of the '745 patent is unpatentable as having been obvious over Iwamiya and Sarantos.

4. Claim 9

Claim 9 recites: "The physiological monitoring device of claim 1, wherein the physiological parameter comprises oxygen saturation." Ex. 1001, 16:21–23.

Apple provides arguments and evidence in support of contending claim 9 is unpatentable as having been obvious over Iwamiya and Sarantos. *See* Pet. 19–20; Pet. Reply 11–23. Masimo opposes. *See* PO Resp. 1–4, 17–42; PO Sur-reply 3–5, 7–8 ("***Fourth***" and "***Fifth***").

In overview, Apple relies on the combination of Iwamiya and Sarantos as rendering the subject matter of parent claim 1 obvious, then cites Sarantos for the additional obviousness of modifying the Iwamiya-Sarantos device to determine blood oxygen saturation. Masimo disputes: (1) the significance of Sarantos's disclosure as to determining blood oxygen saturation; (2) Apple's alleged motivations for the combination; and (3) whether the combination could have been achieved with a reasonable expectation of success. Masimo also (4) relies on objective indicia of nonobviousness.

We conclude Apple's contentions are supported by a preponderance of the evidence. To explain why, we first discuss the scope of claim 9 (sub-section (a)). Then we discuss the content of Iwamiya and Sarantos as they relate to determining oxygen saturation per claim 9 (sub-section (b)). Next, we address motivation to combine Iwamiya and Sarantos

MASIMO 2035
Apple v. Masimo
IPR2024-00242

(sub-section (c)) with a reasonable expectation of success (sub-section (d)). Then, we consider Masimo's reliance on objective indicia of nonobviousness (sub-section (e)). Lastly, we weigh all of the arguments and evidence to reach a conclusion as to obviousness (sub-section (f)).

a) Scope of Claim 9

Claim 9 depends from independent claim 1. Claim 1 recites a physiological monitoring device including: "a material configured to be positioned between the plurality of light-emitting diodes and *tissue on a wrist of a user* when the physiological monitoring device is in use"; and "a processor configured to . . . *determine* a physiological parameter." Ex. 1001, 15:35–38, 15:58–61 (emphases added). Claim 9 adds "the physiological parameter comprises *oxygen saturation*." *Id.* at 16:21–23 (emphasis added). We discuss two aspects of these recitations here.

First, the parties agree claim 9 requires determining oxygen saturation by using light to interrogate the wrist of the user. *See, e.g.*, Pet. 20 (arguing there is a reasonable expectation of success in the proposed combination of Iwamiya and Sarantos "because wrist-worn pulse oximetry sensors, such as that described in Sarantos, were well-known in the art"); Pet. Reply 21 (stating "determining an oxygen saturation parameter at the wrist" is "required by" claim 9); PO Resp. 8 ("Claim 9 recites a novel pulse oximetry sensor that measures from a user's wrist"). We apply this mutual understanding of the scope of claim 9 in this Decision.

Second, Masimo argues Apple's "Reply raises the construction of 'determine . . . oxygen saturation.'" PO Sur-reply 3. Masimo asserts

MASIMO 2035
Apple v. Masimo
IPR2024-00242

"Apple argues the claim 'could be satisfied by' unspecified 'rudimentary functions'" which do not include actually measuring oxygen saturation. *Id.* (quoting Pet. Reply 21) (citing Ex. 1042 ¶ 41). Masimo contends the claim term "determine" "requires calculating oxygen saturation." *Id.* (citing Ex. 1001, 2:66–3:4, 3:46–61, 13:37–40; Ex. 2101, 69:4–9); Ex. 2100 ¶¶ 7–10.

We disagree with Masimo's reading of Apple's Reply as arguing claim 9 can be satisfied by a processor that does not calculate oxygen saturation. The argument cited by Masimo addresses the significance of Apple's engineers' testimony during the ITC Investigation, concerning development of the Apple Watch, to the issue of reasonable expectation of success. *See* Pet. Reply 20 (line 15) – 23 (line 9). Apple concedes the Apple Watch "determin[es] an oxygen saturation parameter at the wrist, as required by [claim 9]" to perform "pulse oximetry." *Id.* at 20–21. However, according to Apple, the Apple Watch goes even further than the "rudimentary" calculation of oxygen saturation required by claim 9, by providing "reliable operation from measurements at the outer wrist, reliable operation across a range of diverse users, [and] small measurement error across a wide range of SpO_2 levels." *Id.* at 21. Apple therefore concludes "[t]he evidence of challenges overcome in development of the Apple Watch involved design constraints that are not required by [claim 9], and therefore are not legally relevant to assessing reasonable expectation of success in achieving the oxygen saturation feature claimed without those design constraints." *Id.* at 21–22 (citations omitted). We agree with Apple that claim 9 does not specify any such performance benchmarks.

MASIMO 2035
Apple v. Masimo
IPR2024-00242

Dr. Anthony's testimony goes further, and states "the oxygen saturation parameter might not even need to be a measurement" and "[i]t could simply be a binary indication of whether a signal sufficient for measuring oxygen saturation has been obtained." Ex. 1042 ¶ 41. We agree with Masimo that this testimony is inconsistent with the plain and ordinary meaning of claim 9, which requires a processor configured to make an actual determination of oxygen saturation. We therefore do not rely on this testimony in the present Decision.

We conclude claim 9 plainly recites a processor configured to "determine" (Ex. 1001, 15:58–61) "oxygen saturation" (*id.* at 16:21–23), which requires actually calculating an oxygen saturation. No further claim construction is needed to resolve the issues presented in this Decision. *See Realtime Data*, 912 F.3d at 1375.

b) Iwamiya and Sarantos vs. Claim 9

(i) Iwamiya vs. Claim 9

Apple, when initially addressing the requirement in claim 9 that the determined parameter is oxygen saturation, appears to rely on Iwamiya as disclosing this determination. *See* Pet. 19 ("In the combination, *Iwamiya discloses* a sensor that detects 'biological information,' *which includes oxygen saturation*, and provides the example of a 'pulse wave' or heart rate, *wherein oxygen saturation comprises heart rate sensing at different wavelengths*." (emphases added)); *id.* at 20 (relying on Sarantos for obviousness of determining oxygen saturation only "[t]o the extent not disclosed by Iwamiya"). Thus, Masimo's response states the Petition relies

MASIMO 2035
Apple v. Masimo
IPR2024-00242

"on *Iwamiya alone* or in combination with Sarantos as allegedly disclosing oxygen saturation measurements" (PO Resp. 17 (emphasis added)), then argues Iwamiya does not disclose determining oxygen saturation (*id.* at 18–20).

However, during oral argument, Apple clarified that the Petition relies solely on Sarantos, and does not rely on Iwamiya, as disclosing determination of oxygen saturation. *See* Tr. 50:3–51:18. We therefore do not consider in this Decision whether Iwamiya discloses determining oxygen saturation, as recited in claim 9.

(ii) Sarantos vs. Claim 9

(1) Summary of Sarantos Disclosure

As discussed above in Section III.D.2, Sarantos discloses a fitness monitor worn on a user's wrist like a wristwatch, which utilizes PPG (light-based) sensors to determine the wearer's heart rate.

As related to claim 9, Sarantos further discloses that "multiple light-emitting devices" may be used in its device. Ex. 1005, 13:34–36. "For example, it may be desirable to utilize an LED that predominantly emits light in the green light spectrum for the purposes of detecting heart rate." *Id.* at 13:39–44. "*At the same time*, [PPG] techniques may also be used to *measure other physiological parameters besides heart rate, such as blood oxygenation levels*" by "utiliz[ing] an LED that predominantly emits light in the red or infrared spectrum." *Id.* at 13:44–53 (emphases added); *see also id.* at 13:53–14:22 (discussing implementation details).

MASIMO 2035
Apple v. Masimo
IPR2024-00242

(2) Petitioner's Contentions (in the Petition)

In the Petition, Apple asserts "Sarantos discloses measuring blood oxygenation levels." Pet. 19–20 (citing Ex. 1005, 13:40–14:22); Ex. 1003 ¶ 48.

(3) Patent Owner's Opposition

Masimo argues Sarantos "do[es] not disclose measuring oxygen saturation, much less at the wrist." PO Resp. 17, 20; Ex 2002 ¶ 81. Masimo asserts the Sarantos disclosures cited by Apple make only a "brief mention of blood oxygenation levels and red or infrared light," and "disclose[] that pulse oximetry is conventionally performed using red and infrared light, and nothing more." PO Resp. 20 (citing Ex. 1005, 13:40–14:22); Ex. 2002 ¶ 81. According to Masimo: "Sarantos admits that it is not meant for use with the red and infrared light used for pulse oximetry," as "Sarantos explains that the disclosed concepts were 'discussed primarily with respect to light sources that emit green light, e.g., wavelengths in the range of 500 nm to 550 nm.'" PO Resp. 20 (citing Ex. 1005, code (57), Fig. 2, 18:35–51); Ex. 2002 ¶ 81. Masimo asserts "Sarantos characterizes the red and infrared wavelengths used for pulse oximetry as '***dramatically different***' and that his disclosure is '***not tailored for use in other spectrums, such as the red or infrared spectra***.'" PO Resp. 20–21 (quoting Ex. 1005, 18:42–51). Masimo concludes "Sarantos mentions blood oxygenation levels as an aspirational goal," and a person of ordinary skill in the art "therefore would have understood Sarantos did not disclose a device capable of measuring oxygen saturation." *Id.* at 21; Ex. 2002 ¶ 81.

(4) Petitioner's Reply

Apple replies that the Petition relies on Sarantos "not for the structures of Sarantos's own device" as Masimo would have it, "but rather for its reference to well-known techniques for measuring oxygen saturation using two wavelengths of light (i.e., red and infrared wavelengths)." Pet. Reply 11 (citing PO Resp. 20–21; Pet. 19–20; Ex. 1005, 13:40–14:22); Ex. 1042 ¶ 22. Apple asserts "[i]t is undisputed that Sarantos discloses these techniques regardless of whether Sarantos's own device implements them." Pet. Reply 11–12. At the same time, according to Apple, "Sarantos clearly contemplates embodiments where its device would measure blood oxygenation levels using red and infrared light" by describing "structural adaptations that can be made to accommodate multiple LEDs of different wavelengths." *Id.* at 12 (citing Ex. 1005, 13:34–36, 13:44–14:22); Ex. 1042 ¶ 23.

Apple asserts "Sarantos's use of 'green/yellow' light in preferred embodiments also does not constitute a teaching away," because it does not criticize, discredit, or discourage using red and infrared light to determine oxygen saturation. Pet. Reply 12 (citing *Meiresonne v. Google, Inc.*, 849 F.3d 1379, 1382 (Fed. Cir. 2017)); Ex. 1042 ¶ 23. Apple argues a person of ordinary skill in the art, upon "reviewing Sarantos's alternative embodiments for measuring blood oxygen levels at [Ex. 1005, 13:36–14:22] would have understood and found obvious that the ratios/dimensions of Sarantos's . . . photodetectors could and would be suitably optimized for the detection of red/infrared light." Pet. Reply 12; Ex. 1042 ¶ 23.

MASIMO 2035
Apple v. Masimo
IPR2024-00242

(5) Patent Owner's Sur-reply

Masimo replies that Sarantos's disclosures concerning measuring oxygen saturation at the wrist are "at best, a speculative invitation for experimentation," and a person of ordinary skill in the art "would not have understood Sarantos's passing reference to oxygen saturation as disclosing" a device that determines oxygen saturation at the wrist. PO Sur-reply 12, 18–19; Ex. 2002 ¶ 81; Ex. 2070 ¶¶ 57, 88. Masimo maintains "Sarantos discourages red and infrared measurements as 'dramatically different' from the spectrums for which its sensor is tailored." PO Sur-reply 12, 19 (citing Ex. 1005, 18:42–51); Ex. 2002 ¶ 81; Ex. 2070 ¶ 57.

(6) Analysis and Findings as to Sarantos's Disclosure of Determining Oxygen Saturation at the Wrist

For the following reasons, we find a preponderance of the evidence establishes Sarantos discloses a wrist-worn fitness monitor that utilizes a light-based sensor to determine the wearer's blood oxygen saturation.

We find Sarantos discloses "a wristband-type wearable fitness monitor 200 that incorporates a PPG sensor"—that is, a light-based sensor. Ex. 1005, Fig. 2, 7:12–13 (illustrating and describing monitor 200); *id.* at 1:11–19 ("PPG sensors typically include a light source and a photodetector that are placed adjacent to a person's skin.").

We find Sarantos focuses on utilizing monitor 200 to determine the wearer's "heart rate," using green light (500–550 nm) emitted by two light sources 108 that flank a non-square photodetector element 212. *See id.* at Fig. 2, 1:19–56, 5:7–17, 7:12–23, 18:35–37, 18:42–44 ("Light sources

MASIMO 2035
Apple v. Masimo
IPR2024-00242

emitting light in the green spectrum are particularly well-suited for . . . measuring heart rate."). Sarantos adds that its non-square photodetector element 212 "may see similar performance with light sources that emit light predominantly in the 500 nm to 600 nm range, which includes yellow light as well as some light orange light." *Id.* at 18:37–41.

We find Sarantos also indicates monitor 200 may more broadly be used for "biometric monitoring" (i.e., not just heart rate). *Id.* at 6:66–7:16. As one example, Sarantos states "different types of light sources may be used for some or all of the light sources" in order to determine heart rate as well as "blood oxygenation levels." *Id.* at 13:34–53. Sarantos indicates this may be done by "utiliz[ing] an LED that predominantly emits light in the green light spectrum for the purposes of detecting heart rate since the fluctuations in the light that is emitted back out of the person's skin may be more pronounced in the green light spectrum," while "[a]t the same time . . . utiliz[ing] an LED that predominantly emits light in the red or infrared spectrum" to measure blood oxygenation levels. *Id.* In particular: "[T]he light source 108 on the left side of FIG. 2 may be a green-wavelength LED, and the light source 108 on the right side of FIG. 2 may be a red- or infrared-wavelength LED." *Id.* at 13:53–58.

Sarantos recognizes that red light wavelengths (e.g., 660 nm) and infrared light wavelengths (> 700 nm)[11] are "dramatically different" than the green light wavelengths (500–550 nm) that are the focus of Sarantos's

[11] *See, e.g.*, Ex. 1004, Fig. 6 (visible light spectrum spans approximately 400–700 nm, and infrared spectrum begins at approximately 700 nm).

MASIMO 2035
Apple v. Masimo
IPR2024-00242

disclosure for measuring heart rate. *Id.* at 18:35–48. Therefore, Sarantos cautions that "[t]he aspect ratios and dimensional values discussed" for specific embodiments of non-square photodetector element 212 "are tailored based on the green/yellow light spectrum and are not tailored for use in other spectrums, such as the red or infrared spectra." *Id.* at 18:48–51.

The foregoing disclosures clearly reflect that Sarantos contemplated using its wrist-worn monitor 200 to determine the wearer's heart rate (using green light) and the wearer's blood oxygen saturation (using red or infrared light). We disagree with Dr. Duckworth's testimony that "Sarantos'[s] repeated use of 'may' informs a [person of ordinary skill in the art] that this disclosure is aspirational." Ex. 2002 ¶ 81 (citing Ex. 1005, 13:40–14:22); Ex. 2070 ¶¶ 57, 88; *see also* PO Resp. 29. We conclude that, in context, Sarantos uses the term "may" to indicate its disclosures concerning blood oxygen saturation determination are optional embodiments of Sarantos's invention, not to indicate doubt that this could be done. *See* Ex. 1005, 13:34–14:22, 20:34–51. The tenor of Sarantos's disclosure in this regard is that this *could* be done by a person of ordinary skill in the art, not that it *might not be possible* to do so. *See id.* at 13:34–14:22.

Sarantos's statement that "[t]he aspect ratios and dimensional values discussed" for specific embodiments of non-square photodetector element 212 "are tailored based on the green/yellow light spectrum and are not tailored for use in other spectrums, such as the red or infrared spectra," is not to the contrary. *Id.* at 18:35–51. This disclosure merely means that the various details Sarantos provides for particular aspect ratios and dimensional values for non-square photodetector elements, which are optimized for

MASIMO 2035
Apple v. Masimo
IPR2024-00242

detecting green light to determine heart rate,[12] will need to be adjusted in order to detect red or infrared light to determine blood oxygen saturation as disclosed earlier in Sarantos. *See id.* at 13:40–58, 18:35–51; *see also* Ex. 1042 ¶ 23 (Dr. Anthony opining that a person of ordinary skill in the art "would have understood . . . that the ratios and dimensions of Sarantos's [non-square photodetector elements] could and would be suitably adjusted to optimize for the detection of red and infrared light" to determine blood oxygen saturation). This does not teach away from using red or infrared light to determine blood oxygen saturation.

At the same time, we agree with Dr. Duckworth's testimony that Sarantos leaves many implementation details for measuring blood oxygen saturation at the wrist to the knowledge and skill of a person of ordinary skill in the art. *See* Ex. 1005, 13:40–58, 18:35–51; Ex. 2002 ¶ 81 ("Sarantos does not actually disclose how to implement oxygen saturation measurements into his device."); *see also Amgen Inc. v. Hoechst Marion Roussel, Inc.*, 314 F.3d 1313, 1354–55 (Fed. Cir. 2003) ("[W]e hold a presumption arises that both the claimed and unclaimed disclosures in a prior art patent are enabled," but "the patentee may argue that the relevant claimed or unclaimed disclosures of a prior art patent are not enabled[.]"). The limited disclosure of Sarantos in this regard is a factor we consider below in Section III.D.4(d), when

[12] *See, e.g.*, Ex. 1005, 8:39–58, 9:48–10:50 (discussing a non-square photodetector element having an aspect ratio of 2.8 to 1, for use with green light in the 515–545 nm range); *id.* at 10:51–13:27 (discussing various aspect ratios, dimensions, and shapes, for non-square photodetector elements).

MASIMO 2035
Apple v. Masimo
IPR2024-00242

assessing whether Apple has established a reasonable expectation of success in modifying Iwamiya's wrist-worn device to measure blood oxygen saturation.

We finally note that our foregoing findings concerning Sarantos's disclosure are not inconsistent with the decisions rendered during the ITC Investigation. *See* Ex. 1033, 228–231 (ITC Initial Determination, finding "Sarantos includes a suggestion to use multiple emitters with PPG sensors to measure blood oxygenation levels[.]"); Ex. 2104, 51–53 (ITC Opinion, affirming the Initial Determination "regarding *prima facie* obviousness," and affirming-in-part and reversing-in-part regarding objective indicia of nonobviousness).

In conclusion, we find Sarantos discloses a wrist-worn fitness monitor that utilizes a light-based sensor to determine the wearer's blood oxygen saturation. Also, we leave the issue of reasonable expectation of success of doing this in Iwamiya to further discussion below in Section III.D.4(d).

c) Motivation for Combining Iwamiya and Sarantos to Determine Oxygen Saturation at the Wrist

(i) Petitioner's Contentions (in the Petition)

In the Petition, Apple argues a person of ordinary skill in the art "would have been motivated to determine oxygen saturation using Iwamiya's physiological sensor, based on the teachings of Sarantos, in order to expand the range of physiological parameters measured by Iwamiya's sensor, thereby improving the functionality and utility of the sensor." Pet. 20 (citing Ex. 1005, Fig. 2, 13:40–14:22); Ex. 1003 ¶ 48.

MASIMO 2035
Apple v. Masimo
IPR2024-00242

(ii) Patent Owner's Opposition

First, Masimo argues Apple's alleged motivation fails because Apple "does not explain ***how*** Iwamiya and Sarantos would have been combined." PO Resp. 21. Masimo asserts Apple and Dr. Anthony do not provide a "clear, evidence-supported account of the contemplated workings of the combination," which "is a prerequisite to" establishing a motivation. *Id.* (citing Pet. 20). Masimo argues Apple instead "vaguely suggests a modification 'based on the teachings of Sarantos'" without explaining "what modifications to Iwamiya would allow Iwamiya's sensor to measure oxygen saturation at the wrist." *Id.* at 21–22 (citing Pet. 20; Ex. 1003 ¶ 48); Ex. 2002 ¶ 84.

Second, Masimo argues Iwamiya teaches away from following Sarantos's teachings for measuring blood oxygen saturation. *See* PO Resp. 3–4, 17, 21, 22–26. Masimo argues and Dr. Duckworth testifies, by way of technological background, that utilizing pulse oximetry to determine blood oxygen saturation requires "light of at least two wavelengths, typically red [about 600–700 nm] and infrared [about 800–950 nm]." PO Resp. 5–6, 18 (citing Ex. 1013, 13, 35, 40; Ex. 2071, 41:10–17); Ex. 2002 ¶¶ 53–54, 80. Masimo contends "[t]he two wavelengths chosen for pulse oximetry are 660 nm and 940 nm." PO Resp. 18 (citing Ex. 1013, 13, 35). According to Masimo: "The relative amounts of red and infrared light detected during systole and diastole can be used to calculate a ratio of ratios, which can then be mapped to an oxygen saturation value [indicating] the proportional amount of hemoglobin carrying oxygen" utilizing a "complex algorithm." *Id.* at 6, 18–19; Ex. 2002 ¶¶ 53–54, 77.

Masimo then asserts Iwamiya teaches away from utilizing red light (660 nm) in its device. *See* PO Resp. 3–4, 22–26, 28. According to Masimo, "Iwamiya was particularly concerned about weak signal strength caused by melanin in the skin absorbing UV and visible light," so "Iwamiya dedicated substantial disclosure to addressing that problem by using infrared light at 940 nm for measuring pulse waves and filtering out other wavelengths below 900 nm" via optical filter 17. PO Resp. 3–4, 22 (citing Ex. 1004, 10:34–38, 11:19–23); Ex. 2002 ¶ 63; Ex. 2070 ¶ 46. Masimo particularly cites Iwamiya's description that "melanin[] pigment has extraordinarily high absorbance in a wavelength band from ultraviolet light to visible light" (including red light needed to determine oxygen saturation) as resulting in a "weak light" signal such that a pulse wave "cannot be detected." Ex. 1004, 1:62–2:6; PO Resp. 22–23 (citing Ex. 1004, 1:62–2:6, 10:34–38; 21:38–22:12, Fig. 6); Ex. 2002 ¶ 83; Ex. 2070 ¶¶ 46–47.

Masimo contends Iwamiya repeatedly teaches to use infrared light at 940 nm to measure a pulse wave, in order to avoid the light absorption problem associated with melanin in the skin. *See* PO Resp. 22–23 (citing Ex. 1004, 6:31–34, 10:34–38, 11:43–49, 15:26–29, 20:51–55, 21:62–67, 22:24–31, 32:57–60, 42:44–48, 44:15–20); Ex. 2070 ¶ 47. Masimo annotates Iwamiya's Figure 6 to illustrate this argument. *See* PO Resp. 23. Thus, according to Masimo, "Iwamiya tailors multiple aspects of its sensor design" to measure infrared light at 940 nm rather than visible light, such as red light at 660 nm or green light at 500–550 nm. *Id.* at 24 (citing Ex. 1004, Fig. 9 (with annotations), 8:29–37); Ex. 2070 ¶¶ 48–49. This includes optical filter 17, which blocks light below 900 nm from reaching light

receiving unit 9, "in part to avoid measurement changes due to external light" such as sunlight. PO Resp. 25 (citing Ex. 1004, Figs. 3, 4, and 8 (with annotations), 4:26–27, 8:38–47); Ex. 2002 ¶ 83; Ex. 2070 ¶ 49. Masimo concludes Iwamiya teaches away by "expressly teach[ing] against using UV or visible light due to weak signal problems," so there is no motivation to use red light in Iwamiya based on the sparse disclosure in Sarantos discussing determination of blood oxygen saturation. PO Resp. 25–26, 28; Ex. 2002 ¶ 83; Ex. 2070 ¶¶ 50, 52.

Third, Masimo argues Apple's proffered modification of Iwamiya to measure blood oxygen saturation is inoperable. *See* PO Resp. 3–4, 17, 21, 26–28. Here, Masimo again relies on Iwamiya's disclosures concerning difficulties in utilizing visible light to measure a pulse wave in users having skin with a large amount of melanin, as discussed above. *See id.* at 3–4, 22–26. Masimo then asserts Sarantos was designed for green, yellow, and orange wavelengths in the 500–600 nm range to measure heart rate, "and '***not tailored for use in other spectrums, such as the red or infrared spectra***.'" PO Resp. 3, 26–27 (quoting Ex. 1005, 18:48–51) (citing Ex. 1005, 18:35–41); Ex. 2002 ¶¶ 81, 83; Ex. 2070 ¶¶ 46, 50.

According to Masimo, "Apple fails to address that Iwamiya's optical filter was designed to block the operating wavelengths [below 900 nm] that [Apple] proposes adding from Sarantos," which "would render its combination inoperable because it blocks all visible light," including the red light (660 nm) needed to measure oxygen saturation and the green and other visible light (500–600 nm) used by Sarantos to measure heart rate. PO Resp. 3–4, 27; Ex. 2002 ¶ 85; Ex. 2070 ¶¶ 48, 51. Indeed, according to Masimo,

Apple elsewhere "relies on Iwamiya's optical filter and the fact that it only transmits light above 900 nm to satisfy" an element in parent claim 1. PO Resp. 27 (citing Pet. 17–18). Patent Owner asserts that Dr. Anthony, when asked about this during his deposition, "attempted to change the obviousness combination by suggesting that a [person of ordinary skill in the art] would use a different filter," which is not expressed in the Petition. *Id.* (citing Ex. 2071, 180:14–182:19).

(iii) Petitioner's Reply

Apple replies that a person of ordinary skill in the art "would have known how to make predictable adaptations to Iwamiya's device that would allow the device in the Iwamiya-Sarantos combination to measure oxygen saturation." Pet. Reply 13 (section heading). Apple asserts Masimo's opposition "improperly treats the [person of ordinary skill in the art] as an automaton lacking ordinary creativity or knowledge of basic pulse oximetry techniques" developed prior to the '745 patent. *Id.* (citations omitted); Ex. 1042 ¶ 24.

Apple asserts the evidence of record "confirms that a [person of ordinary skill in the art] would have known how to adapt Iwamiya's device to measure blood oxygen levels using red/infrared light as taught in Sarantos." Pet. Reply 13; Ex. 1042 ¶ 25. In particular, according to Apple, "Iwamiya's device already includes 940 nm infrared LEDs that would be suitable for measuring blood oxygen levels." Pet. Reply 13; Ex. 1042 ¶ 25. Apple asserts "it would have been obvious and straightforward to augment the device with one or more LEDs emitting red light" in order to determine

MASIMO 2035
Apple v. Masimo
IPR2024-00242

blood oxygenation saturation, "e.g., by adding one or more red LEDs or replacing one of Iwamiya's two original infrared LEDs with a red LED." Pet. Reply 13; Ex. 1042 ¶ 25. In support, Dr. Anthony annotates Iwamiya's Figures 2 and 3 to identify three potential arrays of red and infrared LEDs to incorporate within Iwamiya's device. *See* Ex. 1042 ¶ 25 (pgs. 29–33). Dr. Anthony also testifies "that optimizing sensitivity of the photodiodes for oxygen saturation, adapting the optical filter to pass both red and infrared light (or implementing an oximeter without such a filter), and performing basic signal processing algorithms for calculating oxygen saturation were all known, obvious, and well within" the level of ordinary skill. Pet. Reply 13–14; Ex. 1042 ¶ 25 (pgs. 33–35) (citing Ex. 1001, 1:31–2:27; Ex. 1013, 96; Ex. 1070, Abstract; Ex. 1071 ¶ 52; Ex. 1080 ¶ 137).

Apple argues Iwamiya does not teach away from Apple's proposed modification using infrared and red light to determine oxygen saturation. *See* Pet. Reply 14–15. Apple acknowledges Iwamiya's existing device detects "a pulse wave for measuring a pulse rate (heart rate) using a **single** wavelength of infrared light at 940 nm," but asserts "Iwamiya never criticizes, discredits, or otherwise discourages the use of **two** wavelengths of red and infrared light **for the purpose of measuring oxygen saturation**." *Id.* at 14 (citing Ex. 1004, 1:62–2:6, 6:32–35; *Meiresonne*, 849 F.3d at 1382); Ex. 1042 ¶ 26. For example, according to Apple, "Iwamiya's preferred 940 nm wavelength light for *pulse rate* measurements could still be retained in the Iwamiya-Sarantos combination" by utilizing that same infrared light to measure *oxygen saturation*. Pet. Reply 14–15 (emphasis added) (citing Ex. 1013, 16, 52, 62–63, 73, 79–80; Ex. 1040, 4; Ex. 1050, 1;

MASIMO 2035
Apple v. Masimo
IPR2024-00242

Ex. 1052 ¶ 7; Ex. 1053, 3–4; Ex. 1056, 16). Apple adds that the "desire to expand the capabilities of Iwamiya's device by adding a red wavelength to measure oxygen saturation in addition to pulse rate would have justified any reasonably necessary design tradeoffs." *Id.* at 15.

(iv) Patent Owner's Sur-reply

Masimo responds that Apple's Reply improperly includes "new combinations and modifications of" Iwamiya in light of Sarantos, "beyond the Petition." PO Sur-reply 2–3 (citing *Ariosa Diagnostics v. Verinata Health, Inc.*, 805 F.3d 1359, 1367 (Fed. Cir. 2015); Ex. 2101, 19:5–12, 27:1–17, 99:21–100:12). In particular, according to Masimo: "The Petition proposed a non-functional modification that added a red emitter but kept Iwamiya's other features," whereas "the Reply asserts a new theory that alleges 'predictable adaptations' . . . which Iwamiya teaches are undesirable." *Id.* at 4–5, 7 (citing Pet. Reply 13–14).

On the merits, Masimo reiterates that "Iwamiya's goal is to obtain pulse rate measurements without interference from pigment and ambient light," which Masimo argues "*requires*" LEDs that emit infrared light having a wavelength of 940 nm, a photodetector with strong spectral sensitivity for 940 nm light, and an optical filter that removes light below 900 nm. PO Sur-reply 4, 8 (emphasis added) (citing PO Resp. 22–27; Ex. 1004, 1:62–2:6, 6:31–34, 8:29–31, 8:38–47, 10:34–38); Ex. 2070 ¶¶ 14, 46–47, 63; Ex. 2100 ¶ 34. Masimo asserts Iwamiya thus teaches Apple's proposed modifications are undesirable, because they "destroy Iwamiya's benefits" and "generally conflict with Iwamiya's teachings." PO Sur-reply

MASIMO 2035
Apple v. Masimo
IPR2024-00242

4–5, 7–8 (citing PO Resp. 22–27, 48–49); Ex. 2100 ¶¶ 34–37. In particular, Masimo maintains "Iwamiya discourages detecting visible light, including red light," thereby teaching away from using visible light to determine oxygen saturation. PO Sur-reply 8; Ex. 2070 ¶ 94. Dr. Duckworth also testifies that Dr. Anthony's identification of three potential arrays of red and infrared LEDs in Iwamiya "irradiate different tissue locations with different wavelengths of light, which would result in noisy or unusable signals." PO Sur-reply 8; Ex. 2100 ¶¶ 31–33.

(v) Analysis and Determination as to Motivation for Combining Iwamiya and Sarantos to Determine Oxygen Saturation at the Wrist

As an initial matter, we disagree with Patent Owner's position that Apple's Reply exceeds the proper scope for a reply. In the Petition, Apple asserts it would have been obvious to modify Iwamiya "to determine oxygen saturation using Iwamiya's physiological sensor, based on the teachings of Sarantos," and cites Sarantos at column 13, line 40 to column 14, line 22 in support. Pet. 20. The cited Sarantos disclosure, as discussed above in Section III.D.4(b)(ii), discusses how red and infrared light may be used to determine blood oxygen saturation in a wrist-worn device.

Masimo argues the Petition does not explain persuasively how to modify Iwamiya based on Sarantos. *See* PO Resp. 21–22. In response, Apple's Reply provides further detail for how a person of ordinary skill in the art would have modified Iwamiya's device to use red and infrared light to measure blood oxygen saturation. *See* Pet. Reply 13–14; Ex. 1042 ¶ 25. Accordingly, we find Apple's Reply does not present an improper new

theory of obviousness as alleged by Masimo, but rather permissibly provides further explanation of the argument first expressed in the Petition. *See, e.g.*, *Rembrandt Diagnostics, LP v. Alere, Inc.*, 76 F.4th 1376, 1383–84 (Fed. Cir. 2023).

Next, we determine Apple's motivation contentions are supported by a preponderance of the evidence. In particular, we find a person of ordinary skill in the art would have known that modifying Iwamiya's wrist-worn device to determine blood oxygen saturation would have improved the device, by enabling it to determine *both* the wearer's heart rate (which Iwamiya already does) *and* the wearer's blood oxygen saturation (which Iwamiya does not do, but Sarantos discloses). *See* Pet. 19–20; Pet. Reply 11–14; Ex. 1003 ¶¶ 47–48; Ex. 1042 ¶¶ 22–25; *supra* Section III.D.4(b)(ii) (finding Sarantos discloses a wrist-worn fitness monitor that utilizes a light-based sensor to determine the wearer's blood oxygen saturation). Indeed, Masimo does not dispute this core motivation contention providing the reason why the combination would have been made.

We also find a person of ordinary skill in the art would have been motivated to achieve this combination by using infrared light to determine the wearer's heart rate (as Iwamiya already does), and using red and infrared light to determine the wearer's blood oxygen saturation (as Sarantos discloses). *See* Pet. 19–20; Pet. Reply 11–14; Ex. 1003 ¶¶ 47–48; Ex. 1042 ¶¶ 22–25. Iwamiya uses infrared light (940 nm) to determine the wearer's heart rate. *See* Ex. 1004, 1:41–42, 6:31–34, 9:3–5; Ex. 1003 ¶ 47; Ex. 1042 ¶ 25. Sarantos discloses that a wrist-worn fitness monitor may use green

MASIMO 2035
Apple v. Masimo
IPR2024-00242

light (500–550 nm) to determine the wearer's heart rate, and use red light (660 nm) and infrared light to determine the wearer's blood oxygen saturation.[13] *See* Ex. 1005, 13:34–53, 18:35–51; Ex. 1003 ¶ 48; Ex. 1042 ¶¶ 22–23, 25.

As Petitioner and Dr. Anthony acknowledge, this would have required adding one or more red light emitters to Iwamiya's device, with concomitant changes to Iwamiya's light collection and detection apparatus (i.e., optical filter 17, light receiving unit 9, and processor) to accommodate the red light. *See* Pet. Reply 13–14; Ex. 1042 ¶¶ 23, 25 (citing Ex. 1005, Figs. 1 and 2, 13:34–14:22, 18:48–51). Concerning the addition of red light emitters, Dr. Anthony persuasively annotates Iwamiya's Figures 2 and 3 to identify three potential arrays of red and infrared light emitters to achieve the combination. *See* Ex. 1042 ¶ 25 (pgs. 29–33). Concerning the concomitant changes, Dr. Anthony persuasively explains a person of ordinary skill in the art "would have known how to . . . optimize the sensitivity of the photodiodes [in light receiving unit 9], implement an optical filter that would pass both red and infrared light, and implement commonly known signal processing algorithms for calculating oxygen saturation" within Iwamiya. Ex. 1042 ¶ 25 (pgs. 33–35) (footnote omitted) (citing Ex. 1001, 1:31–2:27).

---

[13] Sarantos actually refers to using "light in the red *or* infrared spectrum" to measure oxygen saturation. Ex. 1005, 13:44–49 (emphasis added), 18:44–48. However, Masimo acknowledges "Sarantos discloses that pulse oximetry is conventionally performed using red *and* infrared light" (PO Resp. 20 (emphasis added)), and does not rely on Sarantos's use of the disjunctive "or" in opposition to Apple's unpatentability contentions. *See* Tr. 41:16–21.

MASIMO 2035
Apple v. Masimo
IPR2024-00242

We disagree with Masimo's arguments and Dr. Duckworth's testimony to the contrary. First, to the extent Iwamiya teaches away from using visible light such as red light in its device, this teaching away applies only to users having "a large amount of melanin[] pigment" in their skin, "for example, in the case of a person of dark skin color." Ex. 1004, 1:53–2:6, 6:31–34, 10:34–38, 11:43–49. Thus, so far as Iwamiya is concerned, using visible observation light in a biometric sensor will work for users having less than a "large amount" of melanin in their skin. *See, e.g.*, *id.* at 1:28–52 (discussing how wristwatch type sensors had "generally used" light with a wavelength shorter than 600 nm to determine heart rate prior to Iwamiya' s use of infrared light (940 nm) to determine heart rate); *id.* at Fig. 6 (illustrating light absorption coefficients of oxy-hemoglobin and melanin in the visible light range (400–700 nm) and the near infrared light range (700–1000+ nm)). Federal Circuit "precedent . . . does not require that the motivation be the *best* option, only that it be a *suitable* option from which the prior art did not teach away." *PAR Pharm., Inc. v. TWI Pharms., Inc.*, 773 F.3d 1186, 1197–98 (Fed. Cir. 2014)).

Second, we are not persuaded by Dr. Duckworth's testimony that adding one or more red light emitters to Iwamiya's device would have resulted in signal problems for determining blood oxygen saturation. *See* Ex. 2100 ¶¶ 31–33 (cited at PO Sur-reply 8). Dr. Duckworth cites two of Dr. Anthony's three proposed arrays, reproduced below (on the next page).

MASIMO 2035
Apple v. Masimo
IPR2024-00242

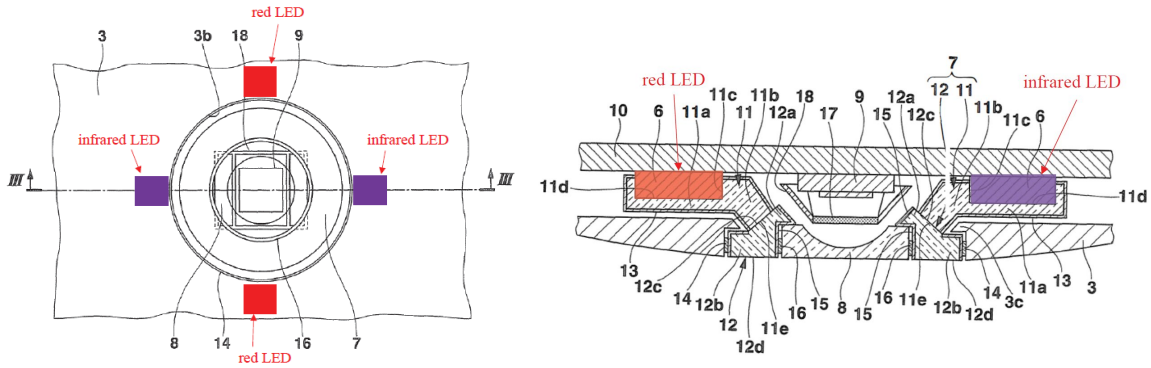

Iwamiya, Figures 2 and 3 (Annotated at Ex. 1042 ¶ 25).

Figure 2 of Iwamiya (at left) is a plan view of back cover 3 of Iwamiya's wristwatch case, which Dr. Anthony annotated to identify the locations of Iwamiya's already-existing two infrared LEDs (in purple) and his two added red LEDs (in red). *See* Ex. 1042 ¶ 25; Ex. 1004, Fig. 3, 6:7–10, 6:31–39 (Iwamiya's device has two light emitting units 6, located at the 3 o'clock and 9 o'clock positions, emitting infrared light). Figure 3 of Iwamiya (at right) is a cross-sectional view of Iwamiya's wristwatch case, which Dr. Anthony annotated to illustrate keeping one of Iwamiya's already-existing infrared LEDs (in purple), and replacing the other infrared LED with a red LED (in red). *See* Ex. 1042 ¶ 25. Dr. Duckworth testifies a person of ordinary skill in the art would have understood these two modifications "would create signal problems because the red and infrared LEDs are not in the same location," so their respectively emitted light rays "would travel through a very different path and through different tissue," "rendering the signals unsuitable for determining oxygen saturation." Ex. 2100 ¶¶ 32–33 (citing Ex. 2079, 836:3–16, 838:4–25, 845:7–16).

Even accepting that conclusion, however, Dr. Duckworth does not address Dr. Anthony's third proposed array, reproduced below.

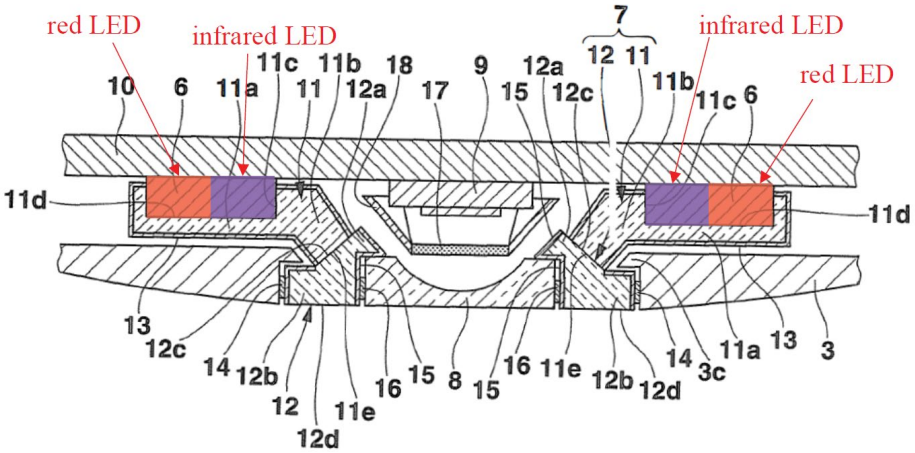

FIG.3

Iwamiya, Figure 3 (Annotated at Ex. 1042 ¶ 25).

Figure 3 of Iwamiya is a cross-sectional view of Iwamiya's wristwatch case, which Dr. Anthony annotated to illustrate replacing each of Iwamiya's already-existing two infrared LEDs with a red LED (in red) and an infrared LED (in purple). *See* Ex. 1042 ¶ 25. Dr. Duckworth does not address this third proposal at all, much less explain persuasively why such closely-aligned red and infrared LEDs might have the same signal problems as Dr. Anthony's other two proposals. *See* Ex. 2100 ¶¶ 31–33.

Third, Masimo argues that Dr. Anthony's testimony that Iwamiya's optical filter 17 would be adjusted "to pass both red and infrared light" (Ex. 1042 ¶ 25) conflicts with the Petition's reliance "on Iwamiya's optical filter *and the fact that it only transmits light above 900 nm* to satisfy element [1.5]" in parent claim 1. PO Resp. 27 (emphasis added) (citing Pet. 17–18). We do not agree. Masimo's argument mischaracterizes the

Petition's analysis for that claim element, which recites "an opening defined in the dark-colored coating is configured to allow at least a portion of light reflected from the tissue to pass through the surface" comprising the opening. Pet. 17 (section heading); *see* Ex. 1001, 15:47–53. Apple cites Iwamiya's use of optical filter 17 as demonstrating the existence of the claimed "opening" within Iwamiya's light shielding frame 18, based on the fact that the filter transmits light. *See* Pet. 17–18. Apple does not rely on the specific wavelength range of greater than 900 nm as being required to satisfy this claim element. *See id.*; Ex. 1042 ¶ 25 (pg. 33 n.3). Thus, modifying the filter to pass both red and infrared light so Iwamiya's device can determine blood oxygen saturation is not inconsistent with Apple's argument for parent claim 1.

Apple's proposed modification of Iwamiya's filter 17 to pass red and infrared light also is not inconsistent with Iwamiya. Iwamiya indicates that its filter functions to prevent "unnecessary light, such as the external light" from reaching light receiving unit 9, and to ensure "only the scattered light of the observation light" reaches unit 9 for determining the user's heart rate. Ex. 1004, 13:1–11, Fig. 4. Iwamiya discloses using its device only for determining heart rate, with infrared light of 940 nm, so in that context Iwamiya configures the filter to remove wavelengths of less than 900 nm. *See id.* at 1:41–42, 6:31–34, 9:3–5, 13:1–11. A person of ordinary skill in the art would have appreciated that, when improving Iwamiya's device to determine heart rate and blood oxygen saturation by using red light in addition to infrared light, the filter would be modified to pass red and

MASIMO 2035
Apple v. Masimo
IPR2024-00242

infrared light to prevent unnecessary light from reaching unit 9 while ensuring the observation light reaches unit 9, per Iwamiya's teachings.

Fourth, as discussed above, Apple's proposed combination of Iwamiya and Sarantos would use infrared light (940 nm) to determine heart rate per Iwamiya, rather than green light (500–550 nm) to determine heart rate per Sarantos. Thus, no further modifications of Iwamiya are required to utilize green light, so Masimo's objections in that regard are irrelevant to Apple's proposed combination.

We finally note that our foregoing findings and determinations concerning motivation to combine Iwamiya and Sarantos might differ, at least in some respects, from the decisions rendered during the ITC Investigation. *See* Ex. 1033, 228–231 (ITC Initial Determination, reviewing arguments concerning motivation to combine, and "find[ing] that Apple has failed to show by clear and convincing evidence that it would have [been] obvious for one of ordinary skill to combine Iwamiya and Sarantos to measure oxygen saturation"); Ex. 2104, 51–53 (ITC Opinion, affirming the Initial Determination "regarding *prima facie* obviousness," and affirming-in-part and reversing-in-part regarding objective indicia of nonobviousness). Nonetheless, for the reasons provided above and based on the record presented in this proceeding, we conclude a preponderance of the evidence supports Apple's proffered motivations for why a person of ordinary skill in the art would have combined Iwamiya and Sarantos without the benefit of hindsight.

For the foregoing reasons, we conclude Apple has articulated sufficient motivating reasons why a person of ordinary skill in the art would

MASIMO 2035
Apple v. Masimo
IPR2024-00242

have modified Iwamiya's device, based on the teachings of Sarantos, to determine blood oxygen saturation using red and infrared light. We therefore turn to consider whether Apple additionally has established that this could have been done with a reasonable expectation of success.

d) Reasonable Expectation of Success in Combining Iwamiya and Sarantos to Determine Oxygen Saturation at the Wrist

(i) Petitioner's Contentions (in the Petition)

In the Petition, Apple asserts a person of ordinary skill in the art "would have reasonably expected success in adapting Iwamiya's sensor" to determine blood oxygen saturation "because wrist-worn pulse oximetry sensors, such as that described in Sarantos, were well-known in the art." Pet. 20 (citing Ex. 1005, Fig. 2, 13:40–14:22); Ex. 1003 ¶ 48.

(ii) Patent Owner's Opposition

Masimo responds that a person of ordinary skill in the art "would not have had any reasonable expectation of success in measuring oxygen saturation at the wrist, as confirmed by the skepticism of Apple's own engineers and its own documents." PO Resp. 17. Thus, Masimo relies heavily on evidence developed in the ITC Investigation and the ITC's corresponding decisions, so we summarize that evidence and those decisions, then we summarize Masimo's argument.

(1) The ITC Investigation

Masimo initiated the ITC Investigation by filing a Complaint accusing Apple of importing products, including the Apple Watch Series 6, that

MASIMO 2035
Apple v. Masimo
IPR2024-00242

infringe the '745 patent and other patents. *See* Ex. 1031 ¶ 2. The asserted claims of the '745 patent initially were claims 1–6, 8, 9, 11, 14, 20–24, and 26–27, which were later changed to claims 9, 18, and 27. *See id.* ¶ 3; Ex. 2104, 3 & n.4. Apple defended in part by arguing claims 9, 18, and 27 are invalid as having been obvious over Iwamiya and Sarantos. *See* Ex. 1033, 224–241. A significant amount of testimony and documentation produced during the ITC Investigation addressed technical challenges posed by using the Apple Watch to measure blood oxygen saturation at the wrist with light-based sensors. We summarize that testimony and documentation, then we turn to the ITC's decisions.

Brian Land's Testimony

Mr. Brian Land, a "distinguished engineer" at Apple who leads the Health Sensing Hardware development team including health sensors for the Apple Watch, was asked upon direct examination by Apple's counsel about Apple's development of a blood oxygen sensor for use in the Apple Watch. *See* Ex. 2076 (Mr. Land's trial testimony), 954:15–955:9, 962:15–963:21. Specifically, he was asked: [redacted] *Id.* at 963:19–21. He responded as follows:

> [redacted]
>
> And we also had to work across -- at the wrist, which was unprecedented -- [redacted]

MASIMO 2035
Apple v. Masimo
IPR2024-00242

[redacted]

Id. at 963:22–964:11. Masimo asserts the time frame of these development efforts was "late 2014 to 2015 . . . just months before the '745 Patent was filed in July 2015." PO Resp. 1–2, 29–30 (citing Ex. 2076, 962:25–963:9; Ex. 2008, 996:25–997:8).

Paul Mannheimer's Testimony

Dr. Paul Mannheimer was hired by Apple in 2014 due to his [redacted] Ex. 2076 (Mr. Land's trial testimony), 962:14–963:15; *see also* Ex. 2008 (Dr. Mannheimer's trial testimony), 994:6–7; Ex. 2077 (Dr. Mannheimer's trial testimony), 996:25–997:8. Dr. Mannheimer holds a Ph.D. in biomedical engineering, and prior to joining Apple he spent about twenty years developing pulse oximetry sensors, monitoring techniques, and alarm handling techniques, specializing in the physio-optics of pulse oximetry. *See* Ex. 2008, 994:2–25, 1009:1–8; Ex. 2080 (Dr. Mannheimer's deposition testimony), 180:22–181:4.

Dr. Mannheimer's first assignment at Apple was [redacted] Ex. 2080, 173:9–13; *see also* Ex. 2008,

MASIMO 2035
Apple v. Masimo
IPR2024-00242

996:25–997:5 (he was "asked to look into doing pulse oximetry at the wrist for the Apple Watch"); Ex. 2077, 1012:12–16 [redacted]

Dr. Mannheimer was asked: "What was your reaction to receiving the assignment of trying to develop a pulse oximeter for the wrist?" Ex. 2080, 173:14–16. He answered:

> [redacted] My first reaction when actually hearing it was internally to my head rolling my eyes, thinking, as I'd thought of it in the past with other clients, like good luck with that. [redacted]

Id. at 173:16–174:6; *see also* Ex. 2077, 1012:17–25 (repeating same testimony).

Dr. Mannheimer was then asked: [redacted] Ex. 2080, 174:7–8. He answered:

> So the wrist is just enormously different from a physiologic perspective than the fingertip or the forehead or the ear, the more conventional sites for pulse oximetry. [redacted] the signal is just enormously weak.

MASIMO 2035
Apple v. Masimo
IPR2024-00242

Id. at 174:9–18; *see also* Ex. 2077, 1013:1–6 (repeating same testimony). Dr. Mannheimer was also asked how the blood oxygen sensor developed at Apple differed from sensors he had previously worked on, and he answered:

> [redacted] The clinical products that I worked on previously for adults, peds, neonates and fetuses operated on a much more vascularized tissue bed, usually fingers or forehead, or on the fetus it was the cheek.
> The wrist is just an incredibly different beast. [redacted]

Ex. 2077, 998:15–999:11.

Dr. Mannheimer testified that it ultimately took Apple's engineers close to six years to develop the blood oxygen feature for the Apple Watch. *See* Ex. 2080, 174:19–175:5.

Stephen Waydo's Testimony

Dr. Stephen Waydo is the director of the Human Interface Devices Health group at Apple, which is responsible for health sensor algorithms in the Apple Watch. *See* Ex. 2008 (Dr. Waydo's trial testimony), 918:3–919:9. Dr. Waydo was asked: [redacted] Ex. 2081 (Dr. Waydo's deposition testimony), 166:4–6. He answered:

> The wrist is one of the most difficult places on the body to do almost every physiological measurement. [redacted]

MASIMO 2035
Apple v. Masimo
IPR2024-00242

[redacted]

Id. at 166:7–167:5; *see also* Ex. 2008 (Dr. Waydo's trial testimony), 938:21–24 (Dr. Waydo was asked "And, in fact, it was extremely challenging to develop the blood oxygen feature in the Apple Watch, correct?," to which he answered "Yes"); Ex. 2078 (Dr. Waydo's trial testimony), 925:23–926:6 (Dr. Waydo testifying that his team of engineers spent "something like 20 or 30,000 hours of engineering time just on [the blood oxygen] algorithm architecture" in the Apple Watch).

Dr. Waydo was also asked: [redacted] Ex. 2078, 923:24–25. He answered:

[redacted]

MASIMO 2035
Apple v. Masimo
IPR2024-00242

[redacted]

Id. at 924:1–11.

Tao Shui's Testimony

Dr. Tao Shui is an engineer at Apple. *See* Ex. 2082 (Dr. Shui's deposition testimony), 11:19–12:11. [redacted] *Id.* at 106:4–108:12. He was asked: [redacted] *Id.* at 108:13–14. He answered:

> [redacted] The watch is worn on the wrist, and the wrist is well known for its lack of signal. [redacted]

Id. at 108:15–21.

Ueyn Block's Testimony

Dr. Ueyn Block is an engineer at Apple. *See* Ex. 1036 (Dr. Block's trial testimony, confidential version), 895:3–896:17. He was asked: [redacted] *Id.* at 902:13–14. He answered in part that: [redacted]

MASIMO 2035
Apple v. Masimo
IPR2024-00242

[redacted] *Id.* at 902:15–19.

Apple's R&D Documentation

Apple's research and development documentation also discusses technical challenges posed by measuring blood oxygen saturation at the wrist using light-based sensors in the Apple Watch.

For example, an internal status update presentation dated [redacted] (*see* Ex. 2085, 1) stated [redacted] (*id.* at 6–9, 13). [redacted] *Id.* at 13.

Another internal update presentation dated [redacted] (*see* Ex. 2083, 5) [redacted]

ITC Decisions

In an Initial Determination, an Administrative Law Judge (ALJ) at the ITC considered the parties' dispute over whether a person of ordinary skill in the art would have had a reasonable expectation of success in combining Iwamiya and Sarantos to measure blood oxygen saturation at the wrist. *See* Ex. 1033, Cover Page, 228–231. The ALJ found Apple "ha[d] not clearly

MASIMO 2035
Apple v. Masimo
IPR2024-00242

and convincingly shown that one of ordinary skill in the art would have had a reasonable expectation of success in modifying Iwamiya to measure oxygen saturation—the record contains testimony from multiple Apple engineers expressing skepticism regarding the implementation of pulse oximetry in a wrist-worn device." *Id.* at 231 (citing Ex. 2077 (Dr. Mannheimer's trial testimony), 1012:12–16; Ex. 2081 (Dr. Waydo's deposition testimony), 166:4–167:5; Ex. 2082 (Dr. Shui's deposition testimony), 108:15–21). Partly on that basis, the ALJ determined Apple had failed to show clearly and convincingly the obviousness of claims 9, 18, and 27. *See id.* at 231, 235–236, 239–240.

The Commission reviewed the Initial Determination as to the obviousness of claims 9, 18, and 27 of the '745 patent. *See* Ex. 2104, 1–2, 6, 49. The Commission affirmed the Initial Determination "with modifications," which were limited to objective indicia of nonobviousness. *See id.* at 49–53. In particular, the Commission affirmed the Initial Determination's "findings regarding *prima facie* obviousness of the asserted claims of the '745 patent," including as to reasonable expectation of success, over Apple's objections. *Id.* at 51. Then, concerning skepticism and failure of others "regarding pulse oximetry at the wrist" as objective indicia of nonobviousness, the Commission determined the Initial Determination "properly evaluated the evidence and arrived at its conclusion." *Id.* at 51–52; *id.* at 53 ("[T]he objective evidence of skepticism and failure of others regarding implementing wrist-based pulse oximetry weighs in favor of a finding of non-obviousness.").

MASIMO 2035
Apple v. Masimo
IPR2024-00242

(2) Patent Owner's Argument

Masimo argues Apple's assertion that "wrist-worn pulse oximetry sensors . . . were well-known in the art" prior to the '745 patent (Pet. 20) is belied by Apple's own engineers and documents relating to development of the Apple Watch, as summarized in Section III.D.4(d)(ii)(1) above. *See* PO Resp. 1–2, 28–40. According to Masimo: "As of late 2014—just months before the '745 Patent was filed in July 2015—[redacted] *Id.* at 1–2 (citing Ex. 2076, 964:2–6; Ex. 2077, 1012:12–22; Ex. 2080, 174:2–174:6; Ex. 2085, 13). Masimo particularly cites Mr. Land's testimony that it "was ***unprecedented*** --[redacted] *Id.* at 30 (quoting Ex. 2076, 964:2–6). Masimo concludes "Apple cannot credibly argue to the Board that wrist-based pulse oximetry was well-known at the time of the '745 Patent when [Mr. Land] just told the ITC that pulse oximetry at the wrist was 'unprecedented' [redacted] *Id.*

Masimo additionally asserts "Apple's research and development documentation corroborates its engineers' skepticism and the extraordinary difficulties in developing a pulse oximeter for the wrist" prior to 2015. *Id.* at 36 (citing Ex. 2085; Ex. 2076, 981:19–983:1, 989:21–990:9). Masimo particularly contends [redacted] and then took six years to redesign the sensor "to include a new optical material called a microlens array (MLA) between the LEDs

and the user's tissue" in order to measure blood oxygen saturation in the Apple Watch Series 6. *Id.* at 36–39 (citing Ex. 2080, 174:19–175:5; Ex. 2083, 7, 9; Ex. 2085, 7–9, 13; Ex. 2076, 984:17–21); Ex. 2002 ¶ 191; Ex. 2070 ¶¶ 28, 30–32. Masimo then analogizes the MLA of the Apple Watch Series 6 to the requirement in claim 9 for a material configured to change a first shape of light into a second shape of light.[14] *See id.* at 39 (citing Ex. 2077, 1020:8–20; Ex. 2079, 824:13–23, 826:13–827:21); Ex. 2002 ¶ 191; Ex. 2070 ¶ 33.

Masimo additionally argues and Dr. Duckworth testifies that Dr. Anthony's testimony and Sarantos's disclosures are insufficient to establish a reasonable expectation of success in combining Iwamiya with Sarantos to measure blood oxygen saturation at the wrist. *See* PO Resp. 28–29, 30; Ex. 2070 ¶ 53. Masimo asserts Dr. Anthony "has never designed a pulse oximeter for use at the wrist," and his declaration testimony "simply repeats the Petition's assertion verbatim without any further analysis or evidence." PO Resp. 28 (citing Pet. 19–20; Ex. 1003 ¶ 48; Ex. 2071, 46:15–18). Masimo contends "expert testimony that repeats the petition verbatim

[14] The issue of whether the Apple Watch Series 6 might be covered by claim 9 is beyond the scope of this IPR. However, we note the ITC determined Masimo had "failed to carry [its] burden to prove infringement [by the Accused Products] with respect to the 'second shape' limitation." Ex. 1033 (Initial Determination), 188; *see id.* at 181–191 (analysis in support of determination); Ex. 2104 (Commission Opinion), 66 (Commission reviewed the Initial Determination in this regard, and "determined to affirm [it] without modification, thus adopting [its] analysis").

MASIMO 2035
Apple v. Masimo
IPR2024-00242

without additional supporting evidence or reasoning [is] entitled to little weight." *Id.* (citing *Xerox*, IPR2022-00624, Paper 9 at 15).

Masimo asserts the Sarantos device "is not designed for the red and infrared light used for pulse oximetry," and there is no evidence that an actual device made according to Sarantos's teachings "could measure oxygen saturation at the wrist or even existed before the July 2015 priority date." *Id.* at 29 (citing Ex. 1005, 18:35–51); Ex. 2002 ¶ 81. Further according to Masimo, the Sarantos patent was assigned to Fitbit, Inc., a company known for making wrist-worn fitness trackers, but which announced only in 2020 that some of its devices would be able to measure oxygen saturation at the wrist. PO Resp. 29 (citing Ex. 1005, code (73), 1:25–31; Ex. 2071, 175:6–12; Ex. 2091; Ex. 2092); Ex. 2070 ¶ 54. Indeed, according to Masimo, Fitbit's director of research was quoted in the Washington Post in September 2020 as stating "[i]t's a pretty hard technical problem to measure SpO_2 on the wrist." PO Resp. 29 (quoting Ex. 2088, 4); Ex. 2070 ¶ 55. Masimo asserts "Apple ignores reality by arguing that Sarantos' mere mention of blood oxygenation somehow disclosed making such a measurement at the wrist in 2015." PO Resp. 29.

Masimo concludes "Apple cannot credibly argue that measuring pulse oximetry at the wrist was obvious to a [person of ordinary skill in the art] in 2015, when it had to hire industry experts in order to show feasibility at that time." PO Resp. 34, 39–40; Ex. 2070 ¶¶ 22–23, 29, 34.[15]

---

[15] Masimo also objects to Apple's identification of "supplemental information" after the filing of Apple's Petition, and prior to the filing of

(iii) Petitioner's Reply

Apple replies that "the '745 Patent itself describes no solutions for addressing the challenges that Masimo only now alleges must be overcome to successfully measure oxygen saturation at the wrist." Pet. Reply 1, 17–18; Ex. 1042 ¶¶ 35–37. According to Apple, the '745 patent "specification merely lists the wrist as one suitable measurement site among others, without mention of even a single adaptation to the disclosed reflectance sensor that would ensure successful measurements at the wrist apart from any other site." Pet. Reply 1, 17 (citing Ex. 1001, 2:58–59, 10:40–51, 12:18–20, 17:19–22, 29:2–31:17, 48:17–22; Ex. 1059, 37:6–8); Ex. 1042 ¶¶ 35–37. Apple concludes that if the '745 patent enables a person of ordinary skill in the art to measure blood oxygen saturation at the wrist, then so does the prior art, leading to a reasonable expectation of success. *See* Pet. Reply 1–2, 17–19. Apple further asserts there is no "specific feature or combination of features recited in [claim 9] that allows for pulse oximetry at the wrist," as shown by comparing independent claims 1, 15, and 20, and as confirmed by Dr. Duckworth during his deposition. *Id.* at 18 (citing Ex. 1059, 33:12–19, 37:9–38:7, 39:9–45:22, 47:10–16, 49:1–15, 58:6–59:2, 83:20–84:4); Ex. 1042 ¶ 38.

Apple also argues there are several prior art publications that "describe solutions for determining oxygen saturation at the wrist" as well as

---

Masimo's Patent Owner Response, as procedurally improper. *See* PO Resp. 40–42. We consider this information only to the extent that it is discussed in Apple's Reply, to which Masimo was granted leave to respond with a new expert declaration. *See* Paper 43, 3–4.

MASIMO 2035
Apple v. Masimo
IPR2024-00242

"experimental results confirming the feasibility of measuring oxygen saturation at the wrist," many of which were not part of the record in the ITC Investigation. Pet. Reply 2, 15–17 (citing Exs. 1039–1041, 1050–1056, 1058, 1061–1066); Ex. 1042 ¶¶ 27–34.

Apple further argues the ITC Investigation provides "evidence of Apple's own successes in overcoming challenges in developing pulse oximetry for the Apple Watch" which merely "demonstrates how these challenges stemmed from design requirements that went well beyond any requirements recited in" claim 9 of the '745 patent. Pet. Reply 2, 19–23. Apple asserts its "engineers' testimony regarding their subjective experiences developing pulse oximetry for the Apple Watch does not bear on whether a **[person of ordinary skill in the art]** would have reasonably expected success in performing the **claimed** function of 'determining' an oxygen saturation parameter at the wrist." *Id.* at 20; Ex. 1042 ¶ 39. Apple similarly notes that its engineers were not asked about any specific prior art references, including Iwamiya and Sarantos, which such a person is presumed to know. *See* Pet. Reply 16, 20 (citations omitted).

Apple moreover accuses Masimo and Dr. Duckworth of "fail[ing] to place the Apple engineers' testimony in its proper context, instead cherry-picking soundbites in support of Masimo's misleading narrative." *Id.* at 20 (citing Ex. 1059, 60:4–63:19); Ex. 1042 ¶ 40. According to Apple, its engineers actually testified "that the challenges confronting the engineers in developing pulse oximetry for the Apple Watch did not merely entail determining an oxygen saturation parameter at the wrist, as required by" claim 9. Pet. Reply 20–21; Ex. 1042 ¶¶ 40–50. Instead, Apple asserts, the

challenges "were intimately related to developing a fully-featured pulse oximeter for a consumer device (i.e., the Watch) that would meet Apple's rigorous performance and design standards across a range of uses not required by" claim 9. Pet. Reply 21; Ex. 1042 ¶¶ 42–49. As some of these features allegedly unrelated to claim 9, Apple cites "the Watch's small form factor, limited battery power, and the Watch's fixed placement at the wrist at sites with unpredictable tissue heterogeneity across a wide range of users" as well as "small measurement error across a wide range of SpO_2 levels." Pet. Reply 21; Ex. 1042 ¶¶ 42–49. Apple therefore concludes its engineer's testimony "is not probative of a lack of reasonable expectation of success" in making a device to determine oxygen saturation at the wrist, which is all that claim 9 pertinently requires, so the testimony is "not legally relevant" here. Pet. Reply 21–22 (citations omitted); *see also id.* at 23 (citing several portions of the ITC Investigation witness testimony as "point[ing] to challenges developing pulse oximetry for the Apple Watch that extended far beyond anything required by" claim 9).

(iv) Patent Owner's Sur-reply

Masimo responds that Apple's Reply improperly includes seventeen new exhibits to show reasonable expectation of success, and a ninety-six page declaration (much of which pertains to the issue of reasonable expectation of success), all of which is "beyond the Petition." PO Sur-reply 2–3, 20, 31 (citing *Ariosa*, 805 F.3d at 1367; Ex. 2101, 19:5–12, 27:1–17, 99:21–100:12). Masimo argues "Apple had the burden of making out a

MASIMO 2035
Apple v. Masimo
IPR2024-00242

prima facie case of obviousness by identifying 'the evidence that supports the grounds' in the Petition." *Id.* at 27 (quoting 35 U.S.C. § 312(a)(3)).

Masimo also argues Apple's Reply "improperly incorporates and relies on fourteen pages from [Dr.] Anthony's declaration" in attempting to show a reasonable expectation of success. *Id.* at 21, 25. In support, Masimo asserts Apple's Reply cites "well over a dozen references" but "does not discuss most of them." *Id.* at 21 (citing Pet. Reply 15–16). Masimo adds that even Dr. Anthony's declaration "provides no analysis" "for many of the references." *Id.* (citing Ex. 1042 ¶¶ 27–34).

On the merits, Masimo argues that even if these newly-cited references are considered, they do not establish a reasonable expectation of success in determining oxygen saturation at the wrist, for various reasons. *See id.* at 25–26 (discussing Exs. 1052, 1054, 1058, and 1061–1066); Ex. 2100 ¶¶ 63–81. According to Masimo, these references merely "identify an aspirational goal of determining oxygen saturation at the wrist," and do not demonstrate the goal was realized. PO Sur-reply 1. Masimo asserts Apple's Reply (as opposed to Dr. Anthony's declaration) "cites only four references" in this regard, but those references merely "report detecting a PPG signal," and the authors did not "successfully determine[] oxygen saturation" at the wrist. *Id.* at 21, 23–24 (citing Pet. Reply 16–17; Ex. 1050; Ex. 1051; Ex. 1053; Ex. 1055); Ex. 2100 ¶¶ 64–68, 72–73. Masimo argues that merely detecting a PPG signal is insufficient to determine oxygen saturation, which "additionally requires ***consistent and reproducible ratios*** of ***multiple*** measurement components at different wavelengths over time, which none of these references disclose," [redacted]

[redacted] PO Sur-reply 21–23 (citing Ex. 2085, 1, 7, 9, 12, 13); Ex. 2100 ¶ 64. Masimo further asserts that none of the researchers involved with Apple's four references "ever published successful oxygen saturation measurements at the wrist or produced a device that determined oxygen saturation at the wrist," thereby demonstrating lack of feasibility. PO Sur-reply 23; Ex. 2100 ¶ 73.

Masimo further argues Apple's Reply notably omits Exhibit 1057 ("Withings"), which "describes a watch-like device from 2014 that determined oxygen saturation." PO Sur-reply 24 (citing Ex. 1057, 1–3); Ex. 2100 ¶¶ 79–80. But the Withings device "could not determine oxygen saturation at the wrist," and instead used a sensor that had to be detached from the wristband and placed on the wearer's fingertip to measure oxygen saturation, which a reviewer found "***seriously annoying***." PO Sur-reply 24 (quoting Ex. 1057, 5 (emphasis added)) (citing Ex. 1057, 1–3); Ex. 2100 ¶ 80. Masimo asserts "Withings is far more probative of" reasonable expectation of success "than the preliminary studies" cited in Apple's Reply, as Withings is "[c]onsistent with Apple's engineers' testimony and documents." PO Sur-reply 24–25; Ex. 2100 ¶¶ 80–81.

Masimo moreover argues Apple "trivializes" the testimony of its own engineers "explaining the difficulty of determining oxygen saturation at the wrist," based on Dr. Anthony's "hindsight re-imagination of that evidence and his speculation that the engineers' testimony related to non-existent design goals." PO Sur-reply 1, 21 (citing Ex. 2101, 106:9–22). Masimo asserts Apple and Dr. Anthony "present[] no reason to depart from the ITC's determinations" of no reasonable expectation of success, "grounded in

MASIMO 2035
Apple v. Masimo
IPR2024-00242

evaluating live testimony and supporting evidence." *Id.* at 1–2, 20–21, 26 (citing Ex. 1033, 113–118, 218–220, 228–231, 235–236, 240); *see also id.* at 28–31 (reiterating various aspects of the ITC Investigation record, summarized above in Section III.D.4(d)(ii)(1)). In particular, according to Masimo, "Apple's arguments amount to the idea a [person of ordinary skill in the art] could have determined oxygen saturation at the wrist merely by adding an LED to an existing heart-rate sensor," which was rejected by the ITC. *Id.* at 20 (citing Ex. 2050, 183–184; Ex. 1033, 218–220). Masimo adds that [redacted] *Id.* (citing PO Resp. 36–38; Ex. 2085, 7, 9, 13); Ex. 2100 ¶¶ 57, 92.

Masimo moreover argues Apple's engineers "were [persons of ordinary skill in the art] at the time working to solve the problems of determining oxygen saturation at the wrist." PO Sur-reply 28; Ex. 2100 ¶ 83. Further according to Masimo, although Apple's engineers were not asked specifically about Iwamiya and Sarantos, still they "would have been aware of" prior attempts to measure oxygen saturation at the wrist, and whether such prior attempts had been successful. PO Sur-reply 28–29 (citing Ex. 2089, 2); Ex. 2100 ¶¶ 84–85. Indeed, Masimo asserts [redacted] PO Sur-reply 29 (citing Ex. 2078, 931:16–932:5; Ex. 2081, 31–32; Ex. 2086, 3, 7–10, 45–46); Ex. 2100 ¶ 86.

Masimo further asserts the skepticism of Apple's engineers was due specifically to measuring blood oxygen saturation at the wrist, and not to other features of the Apple Watch such as the need for regulatory approval,

measuring oxygen saturation through motion, or determining heart rate. *See* PO Sur-reply 29–30 (citing Ex. 2028, 21; Ex. 2078, 926:23–927:5, 927:19–928:8); Ex. 2100 ¶¶ 87–89, 91. According to Masimo, Apple "misleadingly [redacted], with its earlier challenges determining oxygen saturation at the wrist." PO Sur-reply 30 (citing Ex. 2083, 7); Ex. 2100 ¶¶ 87, 90, 93.

Concerning Apple's analogy between enablement of the '745 patent for determining oxygen saturation at the wrist, and reasonable expectation of success in determining oxygen saturation at the wrist, Masimo asserts Apple "erroneously conflates [those] two distinct legal concepts." PO Sur-reply 31. According to Masimo, expectation of success "plays ***no*** role in the enablement analysis," but is a requirement for obviousness. *Id.* at 31–32 (citing *In re Wands*, 858 F.2d 731, 737 (Fed. Cir. 1988); *Kinetic Concepts, Inc. v. Smith & Nephew, Inc.*, 688 F.3d 1342, 1360 (Fed. Cir. 2012)). Even if enablement of the '745 patent is addressed here, Masimo asserts "the '745 Patent need not reiterate well-known challenges before providing a solution" and it "describes advances that work together to facilitate oxygen saturation determinations from difficult-to-measure locations like the wrist." *Id.* at 32–33 (citing Ex. 1001, 5:41–7:3, 7:42–8:31, 8:54–9:10, 9:25–30, 11:38–43; Ex. 1059, 17:19–22, 31:4–17, 48:17–22; Ex. 1033, 199–207; Ex. 2008, 248:24–250:14).

MASIMO 2035
Apple v. Masimo
IPR2024-00242

(v) Analysis and Determination as to Reasonable Expectation of Success in Combining Iwamiya and Sarantos to Determine Oxygen Saturation at the Wrist

(1) Scope of, and Incorporation by Reference in, the Petitioner Reply

First, we disagree with Patent Owner's position that Apple's Reply exceeds the proper scope for a reply. In the Petition, Apple asserts a person of ordinary skill in the art "would have reasonably expected success" in adapting Iwamiya's device to determine blood oxygen saturation, based on the teachings of Sarantos. Pet. 20 (citing Ex. 1005, Fig. 2, 13:40–14:22); Ex. 1003 ¶ 48. That contention is supported by Sarantos, which plainly describes determining oxygen saturation at the wrist using red and infrared light as being within the scope of ordinary skill in the art. *See supra* Section III.D.4(b)(ii); Ex. 1005, 13:34–14:22, 18:35–51. Thus, the Petition facially complies with 35 U.S.C. § 312(a)(3).

Masimo argues against a reasonable expectation of success, based principally on witness testimony and documentary evidence developed during the ITC Investigation. *See* PO Resp. 28–42. That argument opens the door for Apple to submit more explanation and evidence with its Reply, to satisfy Apple's burden to demonstrate a reasonable expectation of success by a preponderance of the evidence, despite the opposing argument and evidence introduced by Masimo.[16] *See, e.g.*, *Anacor Pharms., Inc. v. Iancu*,

[16] We note, as a matter of timing, that Apple's original petition in this proceeding was filed on July 22, 2022, after the ITC trial testimony in early June 2022, but before the ITC's Initial Determination in January 2023. *See* Ex. 1033, Cover Page (Initial Determination dated Jan. 10, 2023), 3 ("An

MASIMO 2035
Apple v. Masimo
IPR2024-00242

889 F.3d 1372, 1380 (Fed. Cir. 2018) (stating "[t]here is . . . no blanket prohibition against the introduction of new evidence" with a petitioner reply, and "the introduction of new evidence in the course of the trial is to be expected in inter partes review trial proceedings"). Further, to ensure procedural fairness, we granted Masimo leave to respond to Apple's new evidence with a new expert declaration, which Masimo did. *See* Paper 43, 3–4; Ex. 2100.

Second, however, there is an independent requirement imposed upon all briefs—they may not incorporate argument by reference to another document, such as an expert declaration. *See* 37 C.F.R. § 42.6(a)(3); *Parus Holdings, Inc. v. Google LLC*, 70 F.4th 1365, 1369–73 (Fed. Cir. 2023) (holding the Board did not abuse its discretion or otherwise violate the law in declining to consider arguments and evidence incorporated into a patent owner response by reference to an expert declaration). One purpose of this requirement is to enforce the Board's 5,600 word count limitation for a reply, which Apple's Reply falls under by one word. *See* 37 C.F.R § 42.24(c)(1); Pet. Reply 30.

We conclude Apple's reliance in the Reply on Exhibits 1039–1041, 1052, 1054, 1056, 1058, and 1061–1066, as helping to establish a reasonable expectation of success, improperly incorporates Dr. Anthony's testimony into the Reply. In this regard, the Reply simply states "the record includes

---

evidentiary hearing was held on June 6–10, 2022."); Ex. 2008 (Transcript of ITC trial testimony dated June 6–10, 2022); Ex. 2105 (Slide #9). Thus, although Apple was aware of the ITC evidence when the petition was filed, Apple did not yet know what the ITC would decide based on that evidence.

MASIMO 2035
Apple v. Masimo
IPR2024-00242

well over a dozen [prior art] references . . . that describe solutions for determining oxygen saturation at the wrist," as explained by Dr. Anthony's declaration testimony and without any discussion of particular disclosures in the Exhibits. Pet. Reply 15–16 (citing Ex. 1042 ¶¶ 27–34). This improperly "throw[s] mountains of evidence at the Board without explanation or identification of the relevant portions of that evidence." *Parus*, 70 F.4th at 1371. Thus, we do not consider these exhibits, or Dr. Anthony's testimony concerning these exhibits, because the incorporation of Dr. Anthony's testimony by reference into Apple's Reply runs afoul of Rule 42.6(a)(3).

(2) Analysis and Determination

Next, we determine a preponderance of the evidence establishes a person of ordinary skill in the art would have had a reasonable expectation of success, in July 2015 (the earliest possible effective filing date of the '745 patent), of modifying Iwamiya's wrist-worn device to determine blood oxygen saturation as well as heart rate, for the following reasons.

First, Sarantos plainly describes determining oxygen saturation at the wrist using red and infrared light as being within the scope of ordinary skill in the art in 2015, although it leaves many implementation details to the knowledge and skill of a person of ordinary skill in the art. *See supra* Section III.D.4(b)(ii); Ex. 1005, code (22), 13:34–14:22, 18:35–51. We acknowledge the evidence presented indicates the assignee of Sarantos (Fitbit, Inc.) did not sell a wrist-worn device for determining blood oxygen saturation until 2020. *See* Ex. 1005, code (73), 1:25–31; Ex. 2070 ¶ 54;

MASIMO 2035
Apple v. Masimo
IPR2024-00242

Ex. 2091 (Forbes article dated Sept. 2020, "Fitbit Update Lets You Quickly Check Your Blood Oxygen Saturation"); Ex. 2092 (Fitbit Press Release dated Sept. 2020, "Track Your SpO2 to Uncover Changes in Your Wellbeing"). However, the evidence is equivocal concerning the *reason* why Fitbit did not sell such devices prior to 2020. For example, the evidence reflects that "[b]lood oxygen saturation monitoring *has gained prominence in 2020*, in part *because it can be a sign of a Covid-19 infection*." Ex. 2091, 1–2 (emphasis added); *see also* Ex. 2088, 1–2 (Washington Post article dated Sept. 2020, stating the Apple Watch Series 6 and the Fitbit Sense are "mostly useless" for determining blood oxygen saturation, and the companies' marketing efforts are "particularly deceptive at a time when many people are looking to health monitors for any clue that they may have covid-19").

It may very well be, as Masimo suggests, that difficulties in determining blood oxygen saturation at the wrist with sufficient accuracy played a role in Fitbit not selling such a device prior to 2020. *See* Ex. 2088, 4 (quoting Fitbit's director of research as stating "[i]t's a pretty hard technical problem to measure SpO_2 on the wrist," which is why the Fitbit Sense relied on "long-term averaging" using "overnight measurement" to determine oxygen saturation); Ex. 2070 ¶ 55. Nonetheless, the evidence does not indicate these difficulties were so significant that a person of ordinary skill in the art would not have reasonably expected success in modifying Iwamiya to determine oxygen saturation.

For example, we agree with Apple's contention and Dr. Anthony's testimony that Pang (Exhibit 1050), Li (Exhibit 1051), Cai (Exhibit 1053),

MASIMO 2035
Apple v. Masimo
IPR2024-00242

and Maattala (Exhibit 1055) "describ[e] actual studies and experimental results that confirm the feasibility of determining oxygen saturation at the wrist before the '745 Patent." Pet. Reply 16–17 (citing Ex. 1050, 2; Ex. 1051, Abstract; Ex. 1053, Abstract; Ex. 1055, 5); Ex. 1042 ¶ 28 (discussing Maattala), ¶ 29 (discussing Cai), ¶ 30 (discussing Li), ¶ 32 (discussing Pang).

Pang described in December 2014 "a genuine wrist pulse oximeter . . . that can measure the pulse rate and oxygen saturation level in a person's blood," which had "been developed and calibrated, and the calibration curve was analyzed." Ex. 1050, 1562 (Publication Date and Abstract). Pang described its wrist-worn sensor device, which utilized red and infrared observation light, and included photographs of the device used for testing. *Id.* at 1563–66. Pang concluded its device "detected the pulse wave signal efficiently" such that "oxygen saturation can then be calculated by the ratio of the light intensity change rates under the two different [red and infrared] wavelengths." *Id.* at 1566. Pang recognized that "[t]he calibration of an oxygen oximeter can be a complicated task," and concluded "a second-order relationship between the R value and the oxygen saturation can provide a better fit with the data." *Id.* at 1566, 1567 (conclusion #4). We find these disclosures indicate a person of ordinary skill in the art would have had a reasonable expectation of success in utilizing red and infrared light to determine oxygen saturation at the wrist in July 2015.

Li presented in June 2012 "a small, low-cost pulse oximeter design appropriate for wearable and surface-based applications that also produces quality, unfiltered photo-plethysmograms (PPGs)" which are "high-fidelity."

MASIMO 2035
Apple v. Masimo
IPR2024-00242

Ex. 1051, 269 (Publication Date and Abstract). Further: "This sensor has demonstrated an ability to gather high-integrity data at fingertip, *wrist*, earlobe, palm, and temple locations from a group of 48 subjects (20 to 64 years old)." *Id.* (emphasis added); *see also* Ex. 1050, 1563 (stating Li "developed a small and low-cost wireless reflectance oximeter suitable for wearable and surface-based applications including at the wrist location"). Li described its sensor device, which utilized red and infrared observation light, and provided experimental data using the sensor device at three locations on the wrist. *See* Ex. 1051, 274–275 (describing sensor device using a "bi-color LED" to generate light at 660 nm and 910 nm, shown as "Red" and "Infrared" in Fig. 11), 276 (experimental data). Li concluded "all three" wrist locations provided "suitable PPGs," even though "[a]t present, it is difficult to consistently obtain high quality PPG data from the wrist" due to the pressure required, which Li solved by bending the wrist at a 45° angle. *Id.* at 276. We find these disclosures indicate a person of ordinary skill in the art would have had a reasonable expectation of success in utilizing red and infrared light to determine oxygen saturation at the wrist in July 2015.

Cai is a study presented in 2010, entitled "Implementation of a Wireless Pulse Oximeter Based on Wrist Band Sensor." Ex. 1053, 1897. Cai described efforts "to develop a wrist band pulse oximeter" implementing "[a]n oxygen saturation measurement system," and presented "preliminary . . . experimental results" that "confirmed the feasibility of this wrist-band oximeter." *Id.* (Abstract); *see also* Ex. 1050, 1562 ("A wrist-worn pulse oximeter is described in [Cai] which has illustrated the feasibility of reflectance oximetry based on a sensor mounted onto a wrist band."). Cai

MASIMO 2035
Apple v. Masimo
IPR2024-00242

described its wrist-worn sensor device, which utilized red and infrared observation light, and concluded its "system efficiently detected the human pulse wave signal" such that "the oxygen saturation is deduced" from the red and infrared light. Ex. 1053, 1898–99 (Sections III.A–C). Cai also provided experimental results "indicat[ing] that this system can effectively detect the change of oxygen saturation." *Id.* at 1900. We find these disclosures indicate a person of ordinary skill in the art would have had a reasonable expectation of success in utilizing red and infrared light to determine oxygen saturation at the wrist in July 2015.

Maattala presented in 2007 a "study . . . done in order to solve the optimum place for integrated pulse oximeter in case of a belt around human chest *or wrist* so that it would provide reliable oxygen saturation (SpO_2) readings for non-invasive constant health monitoring." Ex. 1055, 1856 (Publication Date and Abstract) (emphasis added). Maattala concluded: "Results were promising and showed that an easy portable monitoring device is possible but also many problems, that should be overcome, were detected." *Id.* Maattala investigated a PPG sensor, utilizing red and infrared light (*see id.* at 1857–58), and determined: "Many problems still have to be overcome but this study proves that wireless *integrated pulse oximeter implanted in* a chest belt or *wrist band is possible to achieve with many benefits and practical applications*." *Id.* at 1860 (emphasis added). We find these disclosures indicate that as early as 2007, researchers considered wrist-based blood oxygen saturation determinations to be possible using red and infrared light, although in that early time frame many problems had not yet been overcome.

MASIMO 2035
Apple v. Masimo
IPR2024-00242

Dr. Duckworth observes correctly that Pang "does not present any oxygen saturation determinations from the wrist," Li "does not present any oxygen saturation data," Cai "has no experimental data results showing" an accurate measurement of oxygen saturation, and Maattala did not actually determine oxygen saturation. Ex. 2100 ¶¶ 65–68, 72–73. However, Masimo does not cite, and we are not aware of, any legal authority that requires *actual* success in the prior art as a prerequisite of obviousness. *See, e.g.*, *Almirall, LLC v. Amneal Pharms. LLC*, 28 F.4th 265, 275 (Fed. Cir. 2022) ("A finding of a reasonable expectation of success does not require absolute predictability of success."). We conclude the combination of Sarantos, Pang, Li, Cai, and Maattala as summarized above shows that a person of ordinary skill in the art would have had a reasonable expectation of success in determining oxygen saturation at the wrist in July 2015.

Dr. Duckworth also testifies that Pang, Li, Cai, and Maattala merely report detecting PPG signals at the wrist, whereas successfully determining oxygen saturation "additionally requires ***consistent and reproducible ratios*** of ***multiple*** measurement components at different wavelengths over time." PO Sur-reply 21 (citing Ex. 2100 ¶ 64). However, as discussed above, each of Pang, Li, and Cai tested their respective sensor devices and concluded they generated a sufficient PPG signal to enable determination of blood oxygen saturation at the wrist. *See* Ex. 1050, 1562 (Abstract), 1566 (stating "oxygen saturation can then be calculated" from the PPG signals of the disclosed device); Ex. 1051, 269 (Abstract), 276 (Section B, ¶ 1); Ex. 1053, 1897 (Abstract), 1898–99 (Sections III.A–C, "the oxygen saturation is deduced by computing the ratio of the light intensity change rates under two

MASIMO 2035
Apple v. Masimo
IPR2024-00242

different wavelengths"), 1900 (stating experimental results "indicate that this system can effectively detect the change of oxygen saturation").
Dr. Duckworth does not address these conclusions, and his terse testimony does not explain persuasively why these conclusions might be in error, based on the algorithms that must be applied to the PPG signals to determine oxygen saturation. *See* Ex. 2100 ¶ 64.

Furthermore: "[F]ailure to consider the appropriate scope of the . . . patent's *claimed invention* in evaluating the reasonable expectation of success . . . constitutes a legal error[.]" *Intelligent Bio-Sys., Inc. v. Illumina Cambridge Ltd.*, 821 F.3d 1359, 1367 (Fed. Cir. 2016) (quoting *Allergan, Inc. v. Apotex, Inc.*, 754 F.3d 952, 965–66 (Fed. Cir. 2014) (emphasis added by court)). Claim 9 requires the determination of oxygen saturation, but it does not specify any performance benchmarks for doing so, such as an accuracy of measurement. *See supra* Section III.D.4(a). Indeed, to the extent claim 9 recites any particular aspect(s) of a monitoring device as being important to a successful determination of oxygen saturation, it is: (1) the "material" that shapes the light as it is projected towards wrist tissue; and (2) the "dark-colored coating" that reduces the amount of multiply scattered light that reaches the detector. *See* Ex. 1001, 15:32–61, 16:21–23 (claim 9); *id.* at 5:41–7:3, 7:42–49 (specification comparing prior art two-dimensional pulse oximetry using point source light emitter 104 shown in Fig. 1, with the inventive three-dimensional pulse oximetry that irradiates a larger surface area 206 shown in Fig. 2, achieved with a "light diffuser"), 8:54–9:10 (specification discussing dark-colored coating); Tr. 69:16–70:10, 76:21–77:18 (Masimo's counsel discussing the '745 patent's disclosure in

relation to reasonable expectation of success, and focusing on "the light-shaping element" (per claim 1) "in conjunction with a specific array of detectors" (per claim 15)); PO Resp. 7–9 (discussing the light shape changing material and the coating as enhancements of the '745 patent). The light shape changing material and coating of claim 9, however, concern *generating a sufficient PPG signal at the wrist*—the same aspect of a successful device that Masimo and Dr. Duckworth agree is the focus of the feasibility conclusions in Pang, Li, Cai, and Maattala. *See* PO Sur-reply 21; Ex. 2100 ¶ 64.

Dr. Duckworth moreover testifies that the respective sensors disclosed by Pang, Li, Cai, and Maattala are each "different than" the sensor recited in claim 9. Ex. 2100 ¶ 65; *see id.* ¶¶ 66–68, 72. Dr. Duckworth does not specify any particular differences, but we assume he is referring at least in part to the light shape changing material of claim 9 not being disclosed in these references. In this regard, Iwamiya discloses using the claimed light shape shaping material to determine a heart rate at the wrist with infrared light, as discussed above in Sections III.D.3(a) (comparing Iwamiya and claim 1) and III.D.4(c)(v) (discussing motivation to combine Iwamiya and Sarantos for claim 9). We do not discern, and Dr. Anthony does not explain, any reason why a person of ordinary skill in the art would have had difficulty in utilizing Iwamiya's material to convey infrared and red light to the wearer's tissue, per Apple's combination of Iwamiya and Sarantos to determine blood oxygen saturation.

We have further reviewed Exhibit 2085, an Apple R&D presentation dated [redacted] concerning development of the blood oxygen saturation

MASIMO 2035
Apple v. Masimo
IPR2024-00242

feature in the Apple Watch, which is a central focus of Masimo's argument and Dr. Duckworth's testimony. *See* PO Resp. 2, 36–38; PO Sur-reply 22–23; Ex. 2100 ¶ 64. [redacted] It also discusses [redacted] *Id.* at 6–9, 13. The presentation further concludes [redacted] *Id.* at 13. [redacted] That fact alone belies Masimo's position that Exhibit 2085 demonstrates a lack of reasonable expectation of success in July 2015. Instead, Exhibit 2085 demonstrates that there were challenges to be overcome in this regard, but those challenges were not so significant as to deter Apple from expecting to succeed in its product development efforts. This same consideration also applies to Apple's engineers' testimony from the ITC Investigation (*see supra* Section III.D.4(d)(ii)(1)), who proceeded with their development efforts despite the challenges.

Moreover, and importantly, Apple's engineers were asked about the challenges *they faced* in developing an oxygen saturation determination

feature *in a future iteration of the pre-existing Apple Watch product*. *See* Ex. 1036, 902:13–14 (Dr. Block's trial testimony, confidential version); Ex. 2008, 938:21–23 (Dr. Waydo's trial testimony); Ex. 2076, 963:19–21 (Mr. Land's trial testimony); Ex. 2077, 996:25–997:5, 1012:12–25 (Dr. Mannheimer's trial testimony); Ex. 2078, 923:1–25 (Dr. Waydo's trial testimony); Ex. 2080, 173:9–16 (Dr. Mannheimer's deposition testimony); Ex. 2081, 165:1–166:6 (Dr. Waydo's deposition testimony); Ex. 2082, 108:2–14 (Dr. Shui's deposition testimony). They were not asked to address the issue presented here, which is whether *a person of ordinary skill in the art* would have reasonably expected success in *determining oxygen saturation at the wrist*, using the light shape changing material disclosed by Iwamiya. *See id.* (collection of citations).

We also agree with Apple's argument that, in the context of developing a blood oxygen saturation determination feature in a future iteration of the pre-existing Apple Watch product, the engineers faced various unclaimed constraints that are unrelated to the breadth of claim 9. One such constraint is the Apple Watch's [redacted][17] whereas claim 9 does

[17] *See* Ex. 2076, 963:19–964:1 (Mr. Land stating [redacted] *d.* at 964:7–8 (Mr. Land stating [redacted] *id.* at 970:6–971:6 (Mr. Land discussing features in the Apple Watch Series 6 other than oxygen saturation determination); Ex. 2077, 998:21–999:11 (Dr. Mannheimer stating [redacted]

MASIMO 2035
Apple v. Masimo
IPR2024-00242

not place any limitation on the size or environmental use of the claimed monitoring device. Masimo's contention that Apple's [redacted] is unrelated to the engineers' early feasibility determinations (*see* PO Sur-reply 30; Ex. 2100 ¶¶ 87, 93) ignores the fact that, from the outset, these efforts were directed to developing a future iteration of the pre-existing Apple Watch product, [redacted] Another constraint was the desire for the Apple Watch [redacted]"[18] whereas claim 9 does not specify any such requirement(s). As noted above, it is legal error to fail to consider the scope of the claimed invention when considering reasonable expectation of success. *See Intelligent Bio-Sys.*, 821 F.3d at 1367.

We agree with Masimo that Withings (Exhibit 1057) discloses a wrist-worn oxygen saturation sensor, in which the user must detach the sensor from a wristband and attach it to a finger to obtain oxygen saturation readings. Withings does not detract, however, from the detailed disclosures of Sarantos, Pang, Li, Cai, and Maattala discussed above as demonstrating a

---

[redacted] Ex. 1036, 902:13–19 (Dr. Block stating: [redacted]

[18] Ex. 2076, 964:8–10 (Mr. Land's trial testimony); *see also* Ex. 2085, 5 [redacted] Ex. 2078, 925:3–12 (Dr. Waydo discussing this aspect of the development).

MASIMO 2035
Apple v. Masimo
IPR2024-00242

reasonable expectation of success in measuring oxygen saturation at the wrist, rather than the finger.

Finally, we acknowledge that the ITC, based on the record presented there, determined Apple had "not clearly and convincingly shown that one of ordinary skill in the art would have had a reasonable expectation of success in modifying Iwamiya to measure oxygen saturation" in view of Sarantos. Ex. 1033, 231 (ITC Initial Determination); *see id.* at 228–230 (comparing claim 9 with Iwamiya and Sarantos); Ex. 2104, 51–53 (ITC Opinion, affirming the Initial Determination "regarding *prima facie* obviousness," and affirming-in-part and reversing-in-part regarding objective indicia of nonobviousness). However, the record presented here is much more fulsome—including, for example, Pang, Li, Cai, and Maattala, which were not discussed by the ITC. *See, e.g.*, Ex. 1033, 228–231. We also disagree with the ITC's conclusion that Apple's engineers "express[ed] skepticism regarding the implementation of pulse oximetry *in a wrist-worn device*." Ex. 1033, 231 (emphasis added). As discussed above, the engineers did face several technical challenges in implementing pulse oximetry *in the Apple Watch*, but those challenges did not deter the engineers from continuing their product development efforts. Further, the engineers were not asked to address the specific issue presented here, which is whether a person of ordinary skill in the art would have reasonably expected success in determining oxygen saturation at the wrist at all, despite the acknowledged challenges this poses.

For all of the foregoing reasons, we determine a preponderance of the evidence establishes a person of ordinary skill in the art would have had a

MASIMO 2035
Apple v. Masimo
IPR2024-00242

reasonable expectation of success, in July 2015, of modifying Iwamiya's wrist-worn device to determine blood oxygen saturation as well as heart rate.

e) Objective Indicia of Nonobviousness

Objective indicia of nonobviousness "may often be the most probative and cogent evidence of nonobviousness in the record," for example it may "help turn back the clock and place the claims in the context that led to their invention." *Mintz v. Dietz & Watson, Inc.*, 679 F.3d 1372, 1378 (Fed. Cir. 2012). Such indicia may include expert skepticism, long-felt but unsolved need, and failure of others. *See id.* at 1379. Evidence of objective indicia of nonobviousness "must always when present be considered en route to a determination of obviousness." *Transocean Offshore Deepwater Drilling, Inc. v. Maersk Drilling USA, Inc.*, 699 F.3d 1340, 1349 (Fed. Cir. 2012).

(i) Patent Owner's Argument

Masimo argues the testimony of Apple's engineers and Apple's documents concerning development of the blood oxygen saturation feature for the Apple Watch, discussed above in Section III.D.4(d) in connection with reasonable expectation of success, provide objective indicia of nonobviousness that confirm patentability of claim 9 over Iwamiya and Sarantos. *See* PO Resp. 30–40; Ex. 2002 ¶¶ 87–90, 177–192; Ex. 2070 ¶¶ 20–34. In particular, according to Masimo, this evidence demonstrates skepticism as to measuring blood oxygen saturation at the wrist in 2013 and 2014, roughly contemporaneously with the '745 patent's earliest possible effective filing date in July 2015. *See* PO Resp. 30–40. Masimo further

MASIMO 2035
Apple v. Masimo
IPR2024-00242

asserts "[Dr.] Mannheimer's testimony also revealed that others also tried to achieve pulse oximetry at the wrist and failed." PO Resp. 34; Ex. 2070 ¶ 34.

Masimo additionally relies on evidence showing that Apple, [redacted] PO Resp. 31 (quoting Ex. 2089, 2, 5). In July 2013, Apple "hired away Masimo's Chief Technology Officer," according to Masimo. *Id.* (citing Ex. 2087, 2). In August 2013, Apple investigated Masimo's commercially available PPG sensor devices as part of Apple's development of the original Apple Watch, including benchmarking a "Forehead Reflectance Sensor" sold by Masimo but applied at the wrist by Apple (Ex. 2086, 19) [redacted] (*id.* at 20). *See* PO Resp. 32–33 (also citing Ex. 2090, 2).

(ii) Petitioner's Reply

Although Apple's Reply addresses the issue of reasonable expectation of success as a general matter (as discussed above in Section III.D.4(d)), it does not address Masimo's specific reliance on objective indicia of nonobviousness in that regard. *See, e.g.*, Pet. Reply 15–23.

(iii) Patent Owner's Sur-reply

Masimo's Sur-reply argues none of Pang, Li, Cai, and Maattala (introduced with Apple's Reply) presents any actual oxygen saturation determinations at the wrist, and there is no evidence of "any subsequent successful implementation" by the authors, which "confirm[s] a long-felt but unmet need for determining oxygen saturation at the wrist." PO Sur-reply

MASIMO 2035
Apple v. Masimo
IPR2024-00242

23–24; Ex. 2100 ¶¶ 73, 81. According to Masimo, Apple's references additionally establish a "clear desire for" blood oxygen saturation determination at the wrist as early as 2001, yet "there were no commercially available products that did blood oxygen sensing at the wrist" as of the '745 patent's July 2015 effective filing date, thereby demonstrating long-felt need and failure of others. PO Sur-reply 25, 29 (quoting Ex. 2076, 963:5–964:6); Ex. 2100 ¶ 81.

(iv) Analysis and Determination as to Objective Indicia of Nonobviousness

We conclude Masimo's objective indicia evidence is weak, for the following reasons.

As to expert skepticism, Masimo relies on the testimony of Apple's engineers and Apple's R&D documents, which are discussed above in Section III.D.4(d). That evidence indicates there were challenges to be overcome in developing a wrist-worn blood oxygen saturation measuring device, but those challenges were not so significant to deter Apple and its engineers from continuing their product development efforts. *See supra* Section III.D.4(d)(v)(2). Moreover, the skepticism expressed by Apple's engineers was in the specific context of developing a future iteration of the Apple Watch to determine blood oxygen saturation. *See id.* The engineers were not asked whether they were skeptical of being able to measure oxygen saturation at the wrist *at all*, as Masimo would have it. *See id.*

As to long-felt but unsolved need and failure of others, the evidence indicates there were no commercially-available products that measured

MASIMO 2035
Apple v. Masimo
IPR2024-00242

blood oxygen saturation at the wrist as of the '745 patent's July 2015 effective filing date. Indeed, the evidence of record indicates the first such products hit the market in 2020. *See, e.g.*, Ex. 2088, 1 (Washington Post article dated Sept. 2020, stating "Both the Apple Watch Series 6 and Fitbit Sense have new blood-oxygen apps."). However, at best for Masimo, difficulties in determining blood oxygen saturation at the wrist were just one factor in that timing. *See supra* Section III.D.4(d)(v)(2). For example, each of Pang (in 2014), Li (in 2012), and Cai (in 2010) discloses a wrist-worn sensor device prior to 2015, that the authors concluded, based on experimental data, generated sufficient PPG signals using red and infrared light for a satisfactory determination of blood oxygen saturation. *See id.* And Sarantos in May 2015 expressed confidence that a person of ordinary skill in the art could use red and infrared light at the wrist to determine blook oxygen saturation. *See id.* Thus, the absence of commercially-available wrist-worn devices for measuring oxygen saturation in July 2015 provides only a modicum of evidence against obviousness.

We finally note that the ITC also considered objective indicia of nonobviousness, and determined it supported a determination of non-obviousness. *See* Ex. 1033, 240–241 (ITC Initial Determination); Ex. 2104, 51–53 (ITC Opinion, affirming-in-part and reversing-in-part regarding objective indicia of nonobviousness). However, as discussed in detail above, we reach a somewhat different conclusion based on the more fulsome record presented here.

MASIMO 2035
Apple v. Masimo
IPR2024-00242

f) Weighing of Evidence and Conclusion as to Obviousness

We find Iwamiya's wrist-worn physiological monitoring device anticipates the invention of claim 9, except it lacks a dark-colored coating on frame 18 (per parent claim 1), and it measures only the wearer's heart rate rather than the wearer's blood oxygen saturation (per claim 9). We also find a person of ordinary skill in the art would have been motivated to: (1) employ a dark-colored coating on the exterior surface of Iwamiya's frame 18, in order to achieve its light shielding function as disclosed by Sarantos; and (2) add one or more red light emitters to Iwamiya's existing infrared light emitters, with concomitant changes to other parts of Iwamiya, in order to measure the wearer's heart rate and blood oxygen saturation as suggested by Sarantos and confirmed by other prior art references including Pang, Li, Cai, and Maattala. We further find a person of ordinary skill in the art would have reasonably expected success in making those modifications to Iwamiya, to achieve those benefits. We moreover find the absence of commercially-available wrist-worn devices for measuring blood oxygen saturation in July 2015 provides a modicum of evidence against obviousness. On balance, weighing the entirety of the evidence and argument presented by the parties, we conclude Apple has shown by a preponderance of the evidence that claim 9 of the '745 patent is unpatentable as having been obvious over Iwamiya and Sarantos.

MASIMO 2035
Apple v. Masimo
IPR2024-00242

E. Ground 1B — Obviousness over Iwamiya, Sarantos, and Venkatraman

In Ground 1B, Apple argues claims 15, 18, 20, and 27 of the '745 patent are unpatentable as having been obvious over Iwamiya, Sarantos, and Venkatraman. *See* Pet. 2, 20–29; Pet. Reply 3–23. Masimo opposes. *See* PO Resp. 1–4, 17–53; PO Sur-reply 2–12, 19–33.

We conclude a preponderance of the evidence supports Apple's assertions as to all challenged claims. We begin our analysis with a brief summary of Venkatraman, then we address the parties' contentions as to obviousness.

1. Venkatraman

Venkatraman discloses a wrist-worn, light-based heart rate monitor. *See* Ex. 1006, Figs. 2A–2C and 3B–3C, ¶¶ 66–71, 120. Venkatraman's wrist-worn monitor may wirelessly transmit its data to a "secondary device" such as a smartphone, which "acts as a user interface" to control and monitor the wrist-worn device. *Id.* ¶¶ 204, 348–349. Further, the secondary device can show various metrics regarding the user's health, and receive user inputs, through a touch-screen display. *Id.* ¶¶ 231, 342, 348.

2. Claim 15

Apple provides arguments and evidence in support of contending independent claim 15 is unpatentable as having been obvious over Iwamiya, Sarantos, and Venkatraman. *See* Pet. 21–27; Pet. Reply 7–11. Masimo opposes. *See* PO Resp. 50–53; PO Sur-reply 8–12 ("***Sixth***").

MASIMO 2035
Apple v. Masimo
IPR2024-00242

a) Scope of Claim 15

Claim 15 recites a physiological monitoring device comprising, among other elements: "a light block having a circular shape"; and "a plurality of photodiodes . . . arranged in an array having a spatial configuration corresponding to a shape of the portion of the tissue measurement site encircled by the light block." Ex. 1001, 16:36–57.

Figures 7A and 7B of the '745 patent (reproduced above in Section II.B) illustrate sensor 700 including light emitter 702, light concentrator 708, light detector 710, and circular-shaped light block 706 to prevent emitted light from reaching concentrator 708 and detector 710 without first passing through tissue 102 via light path 720. *See* Ex. 1001, Figs. 7A–7B, 10:43–51, 11:10–26, 11:44–67. Further: "The detector 710 can be implemented using one or more photodiodes" and "a plurality of detectors 710 can be arranged in an array with a spatial configuration corresponding to the irradiated surface area depicted in FIG. 7B by the light concentrator 708." *Id.* at 11:37–43.

Masimo asserts claim 15 "requires the plurality of photodiodes are arranged in an array with a spatial configuration that corresponds to the ***circular*** portion of the tissue measurement site bounded by the ***circular***-shaped light block." PO Resp. 51–52; Ex. 2070 ¶ 67. Masimo then discusses the prosecution history of U.S. Patent Application No. 15/195,199 ("the '199 Application"), a parent application of the '745 patent through a series of continuation applications, as being pertinent to that claim requirement. *See* Ex. 1001, code (63); PO Resp. 52.

MASIMO 2035
Apple v. Masimo
IPR2024-00242

In particular, during prosecution of the '199 Application, its claim 1 was amended to recite: a "tissue measurement site . . . having an at least partially circular shape bounded by a light block"; the light block comprising "an annular ring having a circular shape"; and a "plurality of detectors . . . arranged in an array having a spatial configuration corresponding to the shape of the irradiated portion of the tissue measurement site." Ex. 2057, 311. Masimo argued to the Examiner that the "array" limitation had support in the '199 Application specification because:

> The ordinary meaning of the claim term "correspond" means to "have a close similarity; match or agree almost exactly" or "be analogous or equivalent in character, form, or function" or "represent." New Oxford American Dictionary, 390 (3rd Edition 2010). Consistent with this exemplary definition and the originally-filed application, the phrase "arranged in an array having a spatial configuration corresponding to the shape of the irradiated portion of the tissue measurement site" . . . would be understood by a person having ordinary skill in the art as requiring a sufficient number of detectors such that, when arranged together in an array, can "match," "have a close similarity," or "represent" the "at least partially circular shape" of the irradiated portion of the tissue measurement site. . . .
>
> In order for the claimed "plurality of detectors" to "match" or "represent" an "at least partially circular shape" or an "annular shape," the "plurality of detectors" must include sufficient detectors to represent such shapes. For example, six or more detectors could be arranged in an annular shape and meet the recited limitation. However, two detectors, for example, can only be arranged in a spatial configuration representing a line and three detectors, for example, can only be arranged in a spatial configuration representing a line or a triangle. Thus, when read in view of the originally-filed application, the recited "plurality of detectors" would be

MASIMO 2035
Apple v. Masimo
IPR2024-00242

> understood by a person having ordinary skill in the art as including a sufficient number of detectors to represent the desired geometric shape.

Id. at 320–322.

Masimo asserts the foregoing prosecution history concerns a "similar" limitation to the "array" limitation of claim 15 of the '745 patent, and it indicates claim 15 should be construed to require a "sufficient" number of detectors in the array to represent or match a circle, which is more than three detectors. PO Resp. 51–52 (emphasizing that Masimo's prosecution history remarks excluded "***two***" and "***three***" detector arrangements from the scope of the claim at issue); Ex. 2070 ¶¶ 67–68 (stating "two or three" photodiodes "would not be sufficient" to satisfy claim 15).

Apple replies that the '745 patent specification "never expressly discloses a minimum or critical number of photodiodes that must be present to form the claimed array." Pet. Reply 10 (citing Ex. 1001, 9:27–30, 11:38–43; Ex. 1059, 97:22–102:17); Ex. 1042 ¶ 18. Apple asserts "[t]he claim term 'correspond' also has broader meanings than those represented by [Masimo] to the Office during prosecution of" the '199 Application. Pet. Reply 10. In particular, Apple suggests the plain and ordinary meaning of the term "correspond" is "in agreement, harmony, or conformity," as established by three dictionary definitions of that term. *Id.* at 10–11 (citing Ex. 1043; Ex. 1044; Ex. 1045); Ex. 1042 ¶ 19.

Masimo responds that "the intrinsic evidence explains 'corresponding,' *e.g.*, in the context of Claim 15, requires a sufficient number of detectors to match or represent the relevant shape." PO Sur-reply

MASIMO 2035
Apple v. Masimo
IPR2024-00242

3–4 (citing PO Resp. 51–52); Ex. 2100 ¶ 11. Masimo asserts Apple's claim construction ignores the intrinsic evidence in favor of dictionary definitions, an approach rejected by *Phillips v. AWH Corp.*, 415 F.3d 1303 (Fed. Cir. 2005). PO Sur-reply 4.

Upon review of the foregoing, we agree with Masimo's claim construction. Claim 15 pertinently recites "a light block having *a circular shape*," and "a plurality of photodiodes . . . *arranged in an array having a spatial configuration corresponding to a shape* of the portion of the tissue measurement site *encircled by the light block*." Ex. 1001, 16:43–52 (emphases added). The plain and ordinary import of this claim language is that the photodiodes must be arranged in an array having a spatial configuration corresponding to the circular shape of the light block.

The prosecution history of the '199 Application establishes this requires *more than three* photodiodes, because two photodiodes "can only be arranged in a spatial configuration representing a line" (not a circle), and three photodiodes "can only be arranged in a spatial configuration representing a line or a triangle" (not a circle). Ex. 2057, 322. Apple's attempt to argue otherwise, based on extrinsic evidence composed of dictionary definitions, improperly seeks "to contradict claim meaning that is unambiguous in light of the intrinsic evidence." *Phillips*, 415 F.3d at 1324.

b) Petitioner's Contentions (in the Petition)

For many limitations of claim 15, Apple relies on the combination of Iwamiya and Sarantos, as set forth above in Section III.D.3 in relation to Ground 1A and substantially similar subject matter recited in independent

MASIMO 2035
Apple v. Masimo
IPR2024-00242

claim 1. *See* Pet. 21–27. Apple also provides additional argument for claim 15, in four respects.

First, where claim 1 recites "a light block," claim 15 more specifically recites "a light block having a circular shape." Ex. 1001, 15:54 (claim 1), 16:43 (claim 15). Apple still relies on Iwamiya's reflection layers 13 and 15 within annular light guide unit 7 as corresponding to the light block, and adds for claim 15 that this light block has a circular shape. *See* Pet. 22–23 (citing Ex. 1004, Figs. 2–4, 6:7–14, 6:62–7:3, 7:41–49, 12:2–17); Ex. 1003 ¶¶ 54–55. To illustrate this, we reproduce below Apple's annotated version of Figure 2 of Iwamiya.

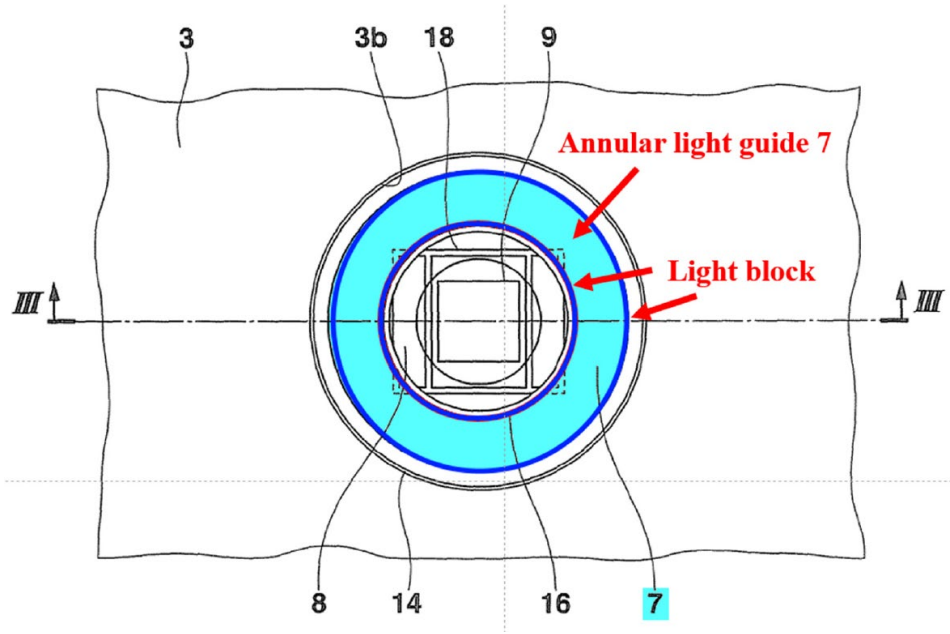

Iwamiya, Figure 2 (Annotated at Pet. 22).

Figure 2 is a plan view of back cover 3 of Iwamiya's wristwatch device. Apple argues layers 13 and 15 (annotated in dark blue) each have "a circular shape as they are formed on outer surfaces of . . . annular light guide unit 7" (annotated in light blue). Pet. 22; Ex. 1003 ¶ 54.

MASIMO 2035
Apple v. Masimo
IPR2024-00242

Second, where claim 1 recites "a plurality of photodiodes," claim 15 additionally requires "the plurality of photodiodes are arranged in an array having a spatial configuration corresponding to a shape of the portion of the tissue measurement site encircled by the light block." Ex. 1001, 15:42–46 (claim 1), 16:44–54 (claim 15). Apple argues Iwamiya's device "includes a plurality of photodiodes configured to detect light reflected by the encircled tissue." Pet. 23 (citing Ex. 1004, Figs. 3–4, 6:7–14, 8:20–23, 12:3–17, 14:36–41); Ex. 1003 ¶ 56. Apple cites Iwamiya's statement that "*plural* light receiving units 9 may be two-dimensionally disposed in the places positioned at the side opposite to the skin H in the scattered light taking unit 8" and "units 9 are *preferably disposed on the same circumference centered on an optical axis of the scattered light taking unit 8*." Ex. 1004, 14:21–41 (emphases added); *see* Pet. 23–24. Based on these disclosures, Dr. Anthony testifies a person of ordinary skill in the art "would . . . have understood that the photodiodes described in Iwamiya are arranged in an array having a spatial configuration corresponding to a shape of the portion of the tissue measurement site encircled by the light block." Ex. 1003 ¶ 56.

Third, claim 15 further specifies that the light-emitting diodes and the light-detecting photodiodes are "are arranged in a *reflectance* measurement configuration." Ex. 1001, 16:54–57 (emphasis added). Apple argues Iwamiya's device is a reflectance-based device. *See* Pet. 24–25 (citing Ex. 1004, Fig. 4, 6:7–21, 13:49–64); Ex. 1003 ¶¶ 58–59.

Fourth, unlike the device of claim 1, the device of claim 15 "is configured to transmit physiological parameter data to a separate processor." Ex. 1001, 17:1–3. Apple argues "Venkatraman discloses a non-invasive

MASIMO 2035
Apple v. Masimo
IPR2024-00242

light-based wrist-worn physiological monitoring device, like Iwamiya's, that wirelessly transmits physiological parameter data to a separate processor, such as a smartphone." Pet. 25 (citing Ex. 1006 ¶ 204[19]); Ex. 1003 ¶ 62. Apple asserts a person of ordinary skill in the art "would have been motivated to transmit information from Iwamiya's wrist-worn wearable device, which has limited display space and processing power, to a secondary device like a smart phone, as taught by Venkatraman in order to increase the functionality of the system [for example, by calculating additional health metrics] without significantly increasing the power consumption [or weight] of Iwamiya's sensor." Pet. 25–26 (citing Ex. 1004, Fig. 1, 5:54–66; Ex. 1006 ¶¶ 204, 231, 342, 348–351; Ex. 1011, 10:23–27); Ex. 1003 ¶ 62. Apple adds that this proposed modification entails the use of known solutions to improve similar systems and methods in the same way, with predictable results. *See* Pet. 26–27; Ex. 1003 ¶¶ 63–64.

c) Patent Owner's Opposition

Masimo does not dispute that Iwamiya's reflection layers 13 and 15 correspond to the circular-shaped light block recited in claim 15. *See, e.g.*,

[19] Venkatraman (Exhibit 1006) is a published patent application, organized by paragraph numbers. *See* Pet. iii; Ex. 1006. Apple's citations to Venkatraman, by contrast, refer to column and line numbers. *See, e.g.*, Pet. 20–21, 25–27. We believe Apple's citations refer to U.S. Patent No. 8,998,815 B2, which issued from the application published as Exhibit 1006. Accordingly, we have translated all of Apple's citations to the corresponding paragraph numbers in Exhibit 1006.

MASIMO 2035
Apple v. Masimo
IPR2024-00242

PO Resp. 50–53. Nor does Masimo dispute that Iwamiya's device is a reflectance-based device per claim 15. *See, e.g.*, *id.*

Masimo argues Iwamiya does not disclose a plurality of photodiodes that, as recited in claim 15, "are arranged in an array having a spatial configuration corresponding to a shape of the portion of the tissue measurement site encircled by the light block." *See* PO Resp. 50–51. Masimo asserts Apple and Dr. Anthony rely on "Iwamiya's description of an alternative embodiment, which is not shown in any figures" as disclosing this limitation, without analysis or persuasive explanation. *Id.* at 51 (citing Pet. 23–24; Ex. 1004, 14:39–41); Ex. 2070 ¶ 66. In particular, according to Masimo, "Apple provides no illustration of how Apple envisions" Iwamiya to render obvious the claimed "arrangement, its location in Iwamiya's structure, or even how many photodiodes are involved." PO Resp. 51; Ex. 2070 ¶ 68. For example, Masimo points out that Iwamiya "defin[es] the arrangement of photodiodes based on the optical axis of . . . Iwamiya's light receiving unit," rather than Iwamiya's light block. PO Resp. 51 (citing Ex. 1004, 14:39–41).

As discussed above in Section III.E.2(a), claim 15 requires more than three photodiodes to correspond to a circular shape. Applying that construction, Masimo asserts "Apple does not even explain how many detectors are involved in its combination, let alone demonstrate those detectors are sufficient to define the claimed spatial configuration." PO Resp. 52. Masimo contends "Iwamiya does not fill [this] gap in the Petition's analysis" because it "never explains how many 'light receiving units' are in the alternative embodiment, instead stating there are 'plural,'"

and it "does not illustrate where its 'light receiving units' would be positioned or how there would be room for multiple light receiving units in its space-constrained wristwatch-like sensor." *Id.* at 52–53; Ex. 2070 ¶ 68.

Masimo further argues "Apple concedes that Iwamiya's disclosure does not explicitly teach the limitation but instead apparently relies on a [person of ordinary skill in the art]'s creativity for it," without sufficient explanation or evidentiary support. PO Resp. 53 (citing Pet. 23–24; Ex. 1003 ¶ 56). Masimo asserts Dr. Anthony's declaration testimony "provides no analysis and instead repeats the Petition's conclusion with the added words 'I believe that,'" which is too conclusory and unspecific to be persuasive. *Id.*

d) Petitioner's Reply

In reply, Apple reiterates Iwamiya's disclosure that "plural light receiving units 9 are preferably *disposed on the same circumference centered on an optical axis* of the scattered light taking unit 8" (Ex. 1004, 14:39–41 (emphasis added)) corresponds to the array required by claim 15. *See* Pet. Reply 7–9 (citing Ex. 1004, Fig. 2, 14:36–41); Ex. 1042 ¶ 16. Apple annotates Figure 2 of Iwamiya, as reproduced below (on the next page), to illustrate this contention.

MASIMO 2035
Apple v. Masimo
IPR2024-00242

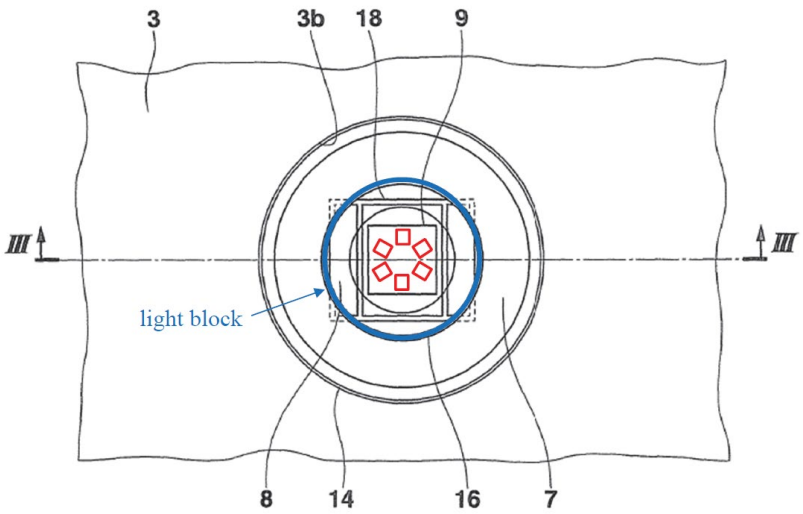

FIG.2

Iwamiya, Figure 2 (Annotated at Pet. Reply 9).

Figure 2 is a plan view of back cover 3 of Iwamiya's wristwatch, including scattered light taking unit 8 that contacts the wearer's skin, light receiving unit 9, and waterproof packing 16. *See* Ex. 1004, 4:9–10, 5:54–67, 6:14–21, 8:7–13; *see also id.* Fig. 3 (cross-sectional view taken along line III-III in Fig. 2). Apple adds two annotations in Figure 2. First, Apple's blue coloring identifies Iwamiya's "light block"—that is, reflection layer 15 (shown but not labeled in Figure 2, *see* Ex. 1004, Fig. 3) surrounding waterproof packing 16. Second, Apple adds six rectangles to Figure 2 and colors them red, which Apple asserts illustrate "photodiodes 9 arranged 'on the same **circumference** centered on an optical axis' of the circular light taking unit 8," allegedly "according to Iwamiya's teachings." Pet. Reply 9; Ex. 1042 ¶ 16.

Apple further asserts "Iwamiya never limits the number of photodiodes 9 that can be used in its device," and Iwamiya "instead leaves

the choice of the number of photodiodes to" a person of ordinary skill in the art. Pet. Reply 9–10; Ex. 1042 ¶ 17. Dr. Anthony testifies such a person would have known that more than three photodiodes "were commonly employed in pulse oximeters before the '745 Patent," and "it would have been obvious to select any suitable number of photodiodes, including six or more, that could be 'two-dimensionally disposed . . . on the same circumference centered on an optical axis of the scattered light taking unit 8.'" Ex. 1042 ¶ 17 (quoting Ex. 1004, 14:36–41) (citing Ex. 1013, 107; Ex. 1008, 4:6–9, 4:59–62; Ex. 1060, 4; Ex. 1068, Fig. 1A, ¶ 22). Dr. Anthony testifies this would have been done in Iwamiya "for purposes such as increasing detection area, light sensitivity, and overall signal-to-noise ratio, and with consideration to cost and manufacturability." *Id.*

Apple adds that "the specific number of photodiodes alleged to be required by the claims [by Masimo] is not even a patentable distinction in the first place." Pet. Reply 10 (citing *E.I. du Pont de Nemours & Co. v. Synvina C.V.*, 904 F.3d 996, 1006 (Fed. Cir. 2018)). Apple also argues "it is settled law that a claimed range is rendered obvious both when the prior art range overlaps and even when it does not in the absence of criticality or unexpected results." *Id.* (citing *In re Peterson*, 315 F.3d 1325, 1329 (Fed. Cir. 2003); MPEP § 2144.05). Apple concludes "Iwamiya's disclosure of a plurality of photodiodes encompasses a range that renders the claim limitation obvious." *Id.*

Apple finally asserts that, during the ITC Investigation, Masimo made substantially similar arguments concerning whether Iwamiya discloses

MASIMO 2035
Apple v. Masimo
IPR2024-00242

photodiodes arranged in the claimed array, which were rejected there. *See* Pet. Reply 8 n.5 (citing Ex. 1033, 232–233).

e) Patent Owner's Sur-reply

Masimo responds that a person of ordinary skill in the art would have understood Apple's proposed use of six photodiodes in Iwamiya "substantially ***decreases*** the detection ***area***, and corresponding signal ***strength***." PO Sur-reply 8–9; Ex. 2100 ¶¶ 24–26. Masimo annotates excerpts of Figure 2 of Iwamiya, as reproduced below, to illustrate this contention.

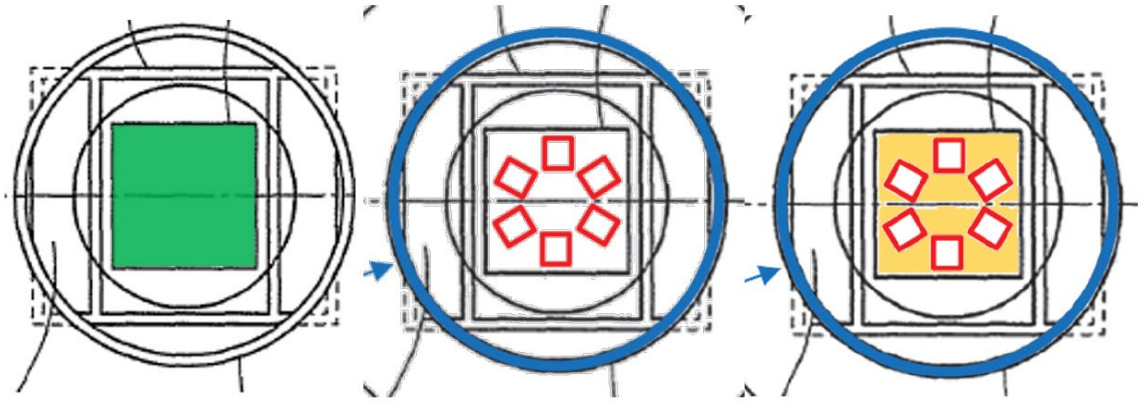

Iwamiya, Figure 2 (Excerpt, Annotated at PO Sur-reply 9).

Figure 2 is a plan view of the back cover of Iwamiya's wristwatch, and Masimo's excerpts focus on light receiving unit 9—the large rectangle in the middle of the excerpts. *See* Ex. 1004, 4:9–10, 5:54–67, 6:17–21. Masimo describes its annotations as identifying "Iwamiya's existing detection area (left, green)," which "is substantially larger than Apple's modification (center, red)" that "no longer covers the area shown in orange (right)." PO Sur-reply 9; Ex. 2100 ¶¶ 25–26. Dr. Duckworth testifies that Apple's "modification decreases signal strength by 50% or more—the opposite of

Apple's alleged benefit and a very undesirable result, particularly for weak signals at the wrist." PO Sur-reply 9; Ex. 2100 ¶¶ 25–26.

Masimo further asserts the evidence cited by Apple to demonstrate allegedly known benefits provided by using six or more photodiodes rely on references such as Mendelson (Exhibit 1008), which are "a completely different sensor design" than Iwamiya's design. PO Sur-reply 9–10 (citing Pet. Reply 9–10; Ex. 1008, Fig. 7; Ex. 1042 ¶ 17); Ex. 2100 ¶ 27. According to Masimo, this different design "positions detectors around a perimeter and captures light emitted from a central emitter reflected outward," whereas "Iwamiya-Sarantos does the opposite: peripheral emitters direct light inward towards the center." PO Sur-reply 9–10 (annotating Ex. 1008, Fig. 7; Ex. 1004, Fig. 4); Ex. 2100 ¶ 27. Apple's use of Mendelson's and others' circular photodetector arrays, Masimo urges, necessarily results in "a gap in Iwamiya-Sarantos's detection area . . . that reduces signal strength—the opposite of Apple's proposed motivation." PO Sur-reply 10–11 (annotating Ex. 1004, Fig. 2, to identify the "Empty spot" in green); Ex. 2070 ¶¶ 100, 102–104; Ex. 2100 ¶¶ 25–27.

Masimo further asserts "Apple rationalizes its modification based on Iwamiya's reference to a 'circumference,'" yet "Iwamiya's 'circumference' defines the detectors' relative location, and not a circular array" as claimed. PO Sur-reply 11; Ex. 2100 ¶¶ 28–29. Dr. Duckworth provides an alternative configuration of photodiodes allegedly disposed on a circumference as described in Iwamiya, but not in "a circular array" as required by claim 15, which we reproduce below (on the next page).

MASIMO 2035
Apple v. Masimo
IPR2024-00242

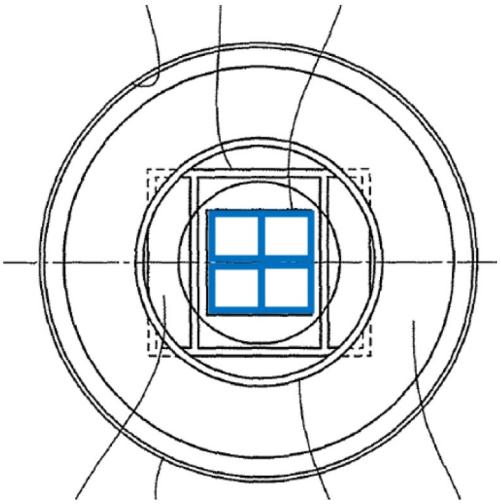

Iwamiya, Figure 2 (Excerpt, Annotated at PO Sur-reply 11).

Figure 2 is a plan view of the back cover of Iwamiya's wristwatch, which Dr. Duckworth has annotated by adding four blue rectangles, to show four photodiodes allegedly disposed on a circumference as described in Iwamiya, but still capturing light over the entire area covered by Iwamiya's light receiving unit 9. *See* Ex. 2100 ¶¶ 28–29.

In response to Apple's assertion that claim 15 "involve[s] optimizing ranges," Masimo argues claim 15 is "not directed to a range" and it instead "recite[s] a particular structural arrangement (not disclosed by Iwamiya) that is defined by a sufficient number of detectors." PO Sur-reply 11–12 (citing Pet. Reply 10); Ex. 2100 ¶ 30.

f) Analysis and Determination as to Claim 15

Masimo's sole opposition to Apple's contentions concerning claim 15 is directed to the photodetector array limitation (i.e., Ex. 1001, 16:48–52). We conclude Apple's unopposed contentions concerning claim 15 are supported by a preponderance of the evidence, for the reasons set forth

above in Section III.D.3(a) comparing Iwamiya with substantially identical subject matter recited in claim 1 for Ground 1A, and based further on Apple's unopposed contentions concerning claim 15 for Ground 1B as summarized above in Section III.E.2(b) ("First," "Third," and "Fourth" arguments) which we adopt as our own in this Decision. We note Sarantos does not play any role in Apple's case for the obviousness of claim 15, because claim 15 does not recite the dark-colored coating of claim 1.

Next, concerning the disputed photodetector array limitation recited in claim 15 but not in claim 1, we conclude Apple's contentions are supported by a preponderance of the evidence for the following reasons.

Iwamiya expressly discloses that its wrist-worn sensor device shown in Figures 1–4 includes "light receiving unit 9" which "is composed of a silicon photo diode"—that is, unit 9 is composed of a single photodiode. Ex. 1004, 4:5–16, 8:20–28; *see also id.* at 14:32–36 ("In the first embodiment . . . *one* light receiving unit is provided." (emphasis added)). Iwamiya also expressly discloses, albeit not in any of its figures, that Iwamiya's "invention is not limited thereto" and "plural light receiving units 9 [i.e., plural photodiodes] may be two-dimensionally disposed . . . in the scattered light taking unit 8." *Id.* at 14:32–39. In addition, "the plural light receiving units 9 are preferably disposed on the same circumference centered on an optical axis of the scattered light taking unit 8." *Id.* at 14:39–41.

We find the foregoing descriptions plainly disclose using more than one ("plural") photodiodes 9, which are disposed in a circular array having its center located at the optical axis of the scattered light taking unit 8

MASIMO 2035
Apple v. Masimo
IPR2024-00242

("disposed on the same circumference centered on"). In particular, Iwamiya states its photodetectors 9 are disposed on "the *same* circumference" (emphasis added), which must be a circle rather than an oval or some other more generic circumference, because the "same" term reflects a constant radius from the center. This also is consistent with the generally circular configuration of Iwamiya's biological information detecting apparatus, as best seen in Figure 2, and with Iwamiya's disclosure that its light receiving unit(s) 9 are placed "in the vicinity of the focal position on an optical axis of the scattered light taking unit 8." *Id.* at Figs. 1–4, 5:57–66, 8:20–28.

Dr. Duckworth's proffered illustration showing four photodetectors that he thinks are disposed on the same circumference as described in Iwamiya, but not in a circular array, is based on his understanding that Iwamiya requires "using a plurality of smaller photodetectors to cover the same area as the larger photodetector" 9 illustrated in Figure 2. Ex. 2100 ¶¶ 28–29. Dr. Duckworth cites Iwamiya at column 14, lines 36–41, as supporting this testimony, but we disagree with Dr. Duckworth's reading of Iwamiya in this regard for reasons provided above. Further, it is not clear to us why Dr. Duckworth thinks his four photodiodes are "disposed on the same circumference" as stated in Iwamiya, yet at the same time they are not in a circular-shaped array as required by claim 15. *See* Ex. 2100 ¶¶ 28–29; Paper 55, 4–5 (discussing Dr. Duckworth's deposition testimony on this point). His testimony in this respect is too conclusory to draw a persuasive distinction between Iwamiya's disclosure and the scope of claim 15.

That leaves the specific number of photodiodes claimed, which must be more than three to correspond to the circular shape of Iwamiya's light

MASIMO 2035
Apple v. Masimo
IPR2024-00242

block 13 and 15 and irradiation area E. *See* Ex. 1004, Figs. 2–4, 6:7–21, 6:40–52, 7:14–24 (describing the "annular" configuration of Iwamiya's detecting apparatus, and its irradiation area); *supra* Section III.E.2(a) (claim construction). "[W]here the general conditions of a claim are disclosed in the prior art, it is not inventive to discover the optimum or workable ranges by routine experimentation." *In re Aller*, 220 F.2d 454, 456 (CCPA 1955). Further: "A more specific application of this general principle is that '[a] *prima facie* case of obviousness typically exists when the ranges of a claimed composition overlap the ranges disclosed in the prior art,'" which "creates a presumption of obviousness." *E.I. du Pont*, 904 F.3d at 1006. This is just such a case. There is a substantial amount of overlap between Iwamiya's express disclosure of using more than one photodiode, and the claim requirement of using more than three photodiodes—the only difference being that Iwamiya contemplates, for example, two detectors or three detectors, which are excluded from claim 15 via its prosecution history.

Masimo does not attempt to rebut the presumption of obviousness with evidence of any new and unexpected results, or any other criticality, that arises from using more than three photodiodes rather than two or three photodiodes, or that the prior art teaches away in that regard. *See E.I. du Pont*, 904 F.3d at 1006 (discussing several ways by which a patentee can rebut the presumption). Nor does Masimo argue that the number of photodiodes was not recognized as a result-effective variable in the prior art. *See id.*

MASIMO 2035
Apple v. Masimo
IPR2024-00242

Masimo instead argues that *Aller*, *E.I. du Pont*, and similar cases do not apply here at all because claim 15 is directed to a structural arrangement defined by a sufficient number of detectors, so it is not directed to a range. *See* PO Sur-reply 11–12. We disagree. For example, in *Iron Grip Barbell Co. v. USA Sports, Inc.*, 392 F.3d 1317, 1320–22 (Fed. Cir. 2004), the Court applied this line of case law to a claim requiring three elongated handles on a weight plate, versus prior art disclosures of one, two, or four such handles.

We do not rely on Dr. Anthony's testimony concerning alleged benefits that might flow from using "*six or more*" photodiodes in a circular array within Iwamiya's device, including his illustrative annotations to Iwamiya's Figure 2 in this regard. Ex. 1042 ¶¶ 16–18 (emphasis added). As discussed above in Section III.E.2(a), claim 15 requires more than three photodiodes, not at least six photodiodes. Similarly, we also need not address Dr. Duckworth's opposing discussion of alleged disadvantages that might flow from having a plurality of smaller photodiodes (including as many as six smaller photodiodes), rather than a single large photodiode. *See* Ex. 2100 ¶¶ 24–27. In particular, Dr. Duckworth overlooks that Iwamiya itself contemplates using *plural* photodiodes 9 disposed in a circular array having its center located at the optical axis of the scattered light taking unit 8, as discussed above. The only potential issue for obviousness, then, is whether there is any criticality to using more than three photodiodes versus only two or three photodiodes, which Dr. Duckworth does not address. *See id.*

We finally note that our foregoing findings and determinations concerning claim 15 are not inconsistent with the decisions rendered during

MASIMO 2035
Apple v. Masimo
IPR2024-00242

the ITC Investigation. *See* Ex. 1033, 232–233 & n.85 (ITC Initial Determination); Ex. 2104, 51–53 (ITC Opinion, affirming the Initial Determination "regarding *prima facie* obviousness" of dependent claim 18, and affirming-in-part and reversing-in-part regarding objective indicia of nonobviousness).

Thus, we conclude Apple has shown by a preponderance of the evidence that claim 15 of the '745 patent is unpatentable as having been obvious over Iwamiya, Sarantos, and Venkatraman.

3. Claim 18

Claim 18 recites: "The physiological monitoring device of claim 15, wherein the physiological parameter comprises oxygen saturation." Ex. 1001, 17:10–12.

Both parties, in addressing claim 18, rely on arguments we have already considered in Section III.D.4 above in relation to Ground 1A and claim 9, and in Section III.E.2 above in relation to Ground 1B and claim 15. *See* Pet. 27 ("*See* Ground 1A, [9.0]."); PO Resp. 10, 17 (argument grouping claims 9 and 18 together); *id.* at 50 (argument grouping claims 15 and 18 together). For the reasons provided above, we resolve the parties' disputes in Apple's favor, and we conclude Apple has shown by a preponderance of the evidence that claim 18 of the '745 patent is unpatentable as having been obvious over Iwamiya, Sarantos, and Venkatraman.

4. Claim 20

Apple provides arguments and evidence in support of contending independent claim 20 is unpatentable as having been obvious over Iwamiya,

MASIMO 2035
Apple v. Masimo
IPR2024-00242

Sarantos, and Venkatraman. *See* Pet. 27–28; Pet. Reply 23. Masimo opposes. *See* PO Resp. 42.

a) Petitioner's Contentions (in the Petition)

For the first eight limitations of claim 20, Apple relies on the combination of Iwamiya and Sarantos, as set forth in Section III.D.3 above in relation to Ground 1A and substantially similar subject matter recited in independent claim 1. *Compare* Ex. 1001, 15:32–61 (claim 1), *with id.* at 17:20–18:8 (claim 20, first eight limitations). Specifically, for these limitations, the Petition states: "*See* Ground 1A, [1.0]–[1.7]." Pet. 27. This is clearly a cross-reference back to the Petition's Ground 1A analysis for the entirety of claim 1, which is organized into sections "[1.0]" through "[1.7]." *See* Pet. 8–19. However, the portion of Dr. Anthony's declaration addressing the first eight limitations of claim 20 refers back to his previous analysis of *claim 15*, rather than *claim 1*. *See* Ex. 1003 ¶ 66 ("*See* [15.0]–[15.8].").

The ninth and final limitation of claim 20 recites, in addition to the physiological monitoring device:

> a processing device configured to wirelessly receive physiological parameter data from the physiological monitoring device, wherein the processing device comprises a user interface, a storage device, and a network interface configured to wirelessly communicate with the physiological monitoring device, and wherein the user interface includes a touch-screen display configured to present visual feedback responsive to the physiological parameter data.

MASIMO 2035
Apple v. Masimo
IPR2024-00242

Ex. 1001, 18:9–17. For this limitation, Apple cites Venkatraman as disclosing a wrist-worn physiological monitoring device that wirelessly transmits data to a secondary device such as a smartphone which can display various metrics regarding the user's health and receive input via a touch-screen display. *See* Pet. 28 (citing Ex. 1006 ¶¶ 204, 231, 342, 348–351); Ex. 1003 ¶ 67. Apple asserts a person of ordinary skill in the art accordingly "would have been motivated to transmit information from Iwamiya's wrist-worn wearable device, which has limited display space and processing power, to a secondary device like a smart phone . . . in order to increase the functionality of the system without significantly increasing the power consumption of Iwamiya's sensor." Pet. 28; Ex. 1003 ¶ 68.

b) Patent Owner's Opposition

Masimo objects that Apple and Dr. Anthony "do not address multiple elements of" claim 20, because they instead "rely only on a cross-reference to" their arguments for claim 15. PO Resp. 42 (citing Pet. 27–28; Ex. 1003 ¶¶ 66–69). In support, Masimo states the Petition and Dr. Anthony's declaration *both* refer back to "[15.0]–[15.8]." *Id.* (citing Pet. 27; Ex. 1003 ¶ 66). Masimo asserts claim 15 "is not like" claim 20, because claim 15 does not recite several limitations found in claims 1 and 20. *Id.* Masimo concludes "Apple's Ground 1B arguments therefore fail to demonstrate" claim 20 is unpatentable. *Id.*

c) Petitioner's Reply

Apple replies that "[t]he Petition . . . contains a typographical error in cross-citing elements of claim 15 rather than claim 1 in addressing [20.0]–

MASIMO 2035
Apple v. Masimo
IPR2024-00242

[20.8]." Pet. Reply 23 (citing Pet. 27). Apple asserts this alleged mistake "amounts to no more than harmless error" and requests that we "treat elements [20.0]–[20.8] in Ground 1B as rendered obvious for the same reasons as elements [1.0]–[1.7] in Ground 1A." *Id.* (citation omitted). Dr. Anthony's reply declaration is to the same effect. *See* Ex. 1042 ¶ 15.

d) Patent Owner's Sur-Reply

Masimo's Sur-reply does not address claim 20 separately from the other claims. *See* PO Sur-reply 4–12 (arguments addressing Grounds 1A and 1B).

e) Analysis and Determination as to Claim 20

For the first eight limitation of claim 20, the Petition clearly refers back to the combination of Iwamiya and Sarantos, as set forth above in Section III.D.3 in relation to Ground 1A and claim 1. *See* Pet. 27. The only typographical error in this regard is that Dr. Anthony's declaration refers back to claim 15, instead of claim 1 as Dr. Anthony clearly intended to do. *See* Ex. 1003 ¶ 66; Ex. 1042 ¶ 15. For the reasons provided above in Section III.D.3 in relation to claim 1, we conclude a preponderance of the evidence supports Apple's contentions concerning the first eight limitations of claim 20.

For the ninth and final limitation of claim 20, Apple's case for obviousness based on Venkatraman as summarized above in Section III.E.4(a) is unopposed by Masimo. We adopt Apple's analysis and evidence as summarized above as our own in this Decision.

MASIMO 2035
Apple v. Masimo
IPR2024-00242

Thus, we conclude Apple has shown by a preponderance of the evidence that claim 20 of the '745 patent is unpatentable as having been obvious over Iwamiya, Sarantos, and Venkatraman.

5. Claim 27

Claim 27 recites:

> 27. The system of claim 20, wherein at least one of the plurality of light emitting diodes is configured to emit light of a first wavelength and at least one of the plurality of light emitting diodes is configured to emit light of a second wavelength, the second wavelength being different than the first wavelength.

Ex. 1001, 18:37–42.

Apple argues: "In the combination, Sarantos discloses including LEDs configured to emit different wavelengths of light, such as red and infrared, in a physiological monitoring device," citing the same Sarantos disclosures relating to measuring blood oxygen saturation discussed above in Section III.D.4 for claim 9. Pet. 29 (citing Ex. 1005, 13:40–53); Ex. 1003 ¶ 70. Apple asserts a person of ordinary skill in the art "would have been motivated to include such LEDs in Iwamiya's sensor in order to enable the sensor to perform a larger number of physiological measurements, thereby increasing the functionality of the sensor," again as discussed above in Section III.D.4 for claim 9. Pet. 29; Ex. 1003 ¶ 70. Apple adds for claim 27: "For example, as described in Sarantos, a [person of ordinary skill in the art] would have found it 'desirable to include separate light-emitting devices that are each able to emit different wavelengths of light'" with "'each light emitting device . . . used to supply light for a different type of

MASIMO 2035
Apple v. Masimo
IPR2024-00242

photoplethysmographic measurement.'" Pet. 29 (quoting Ex. 1005, 13:47–53); Ex. 1003 ¶ 70.

Masimo opposes, based solely on arguments we have already considered above in Section III.D.4 for claim 9. *See* PO Resp. 43–44 (citing Ex. 2002 ¶¶ 81, 91; Ex. 2070 ¶¶ 14, 56–57). In reply, Apple likewise groups claims 9 and 20 together. *See, e.g.*, Pet. Reply 11 (Section C Title).

For the reasons provided above in Section III.D.4 in relation to Ground 1A and claim 9, and in Section III.E.4 in relation to Ground 1B and claim 20, we conclude Apple has shown by a preponderance of the evidence that claim 27 of the '745 patent is unpatentable as having been obvious over Iwamiya, Sarantos, and Venkatraman.

F. Grounds 2A and 2B — Obviousness over Sarantos, Shie, and Venkatraman

For the reasons set forth above in Sections III.D and III.E, we conclude all of the challenged claims are unpatentable based on Grounds 1A and 1B. Therefore, we decline to address the remaining Grounds 2A and 2B. *See SAS Inst. Inc. v. Iancu*, 138 S. Ct. 1348, 1359 (2018) (holding a petitioner "is entitled to a final written decision addressing all of the claims it has challenged"); *Bos. Sci. Scimed, Inc. v. Cook Grp. Inc.*, 809 F. App'x 984, 990 (Fed. Cir. 2020) (recognizing the "Board need not address issues that are not necessary to the resolution of the proceeding," and agreeing the Board has "discretion to decline to decide additional instituted grounds once the petitioner has prevailed on all its challenged claims").

MASIMO 2035
Apple v. Masimo
IPR2024-00242

IV. PATENT OWNER'S MOTION TO EXCLUDE EVIDENCE

Masimo moves to exclude Apple's Exhibits 1009, 1010, and 1014–1016 from evidence, as being irrelevant. *See* Paper 56, 1. In support, Masimo contends Apple submitted these exhibits with the Petition, "but did not cite them for any purpose whatsoever in the Petition, Petitioner's Reply, or in Petitioner's expert's declarations" so "they are irrelevant to any issue in this proceeding and are inadmissible." *Id.* at 1 (citing Fed. R. Evid. 410, 402). Apple replies that Dr. Anthony relied on these exhibits as part of forming his opinions in this case, so they are admissible under Rule 703 of the Federal Rules of Evidence. *See* Paper 61, 1 (citing Ex. 1003 ¶ 11; Ex. 1042 ¶ 3). We *deny* this aspect of Masimo's Motion as moot, because we do not rely on these exhibits in this Decision. *See* PTAB Consolidated Trial Practice Guide (Nov. 2019) ("CTPG")[20], 79–80 ("[C]onsideration of the objected-to evidence is often unnecessary to resolve the patentability of the challenged claims, and the motion to exclude is moot.").

Masimo also moves to exclude Apple's Exhibits 1039 and 1041 from evidence, for lack of authentication. *See* Paper 56, 1, 2–4. In particular, Masimo asserts Apple has not authenticated these documents as prior art to the '745 patent, as Apple purports them to be. *See id.* at 2–4. Apple replies that these exhibits are admissible as authentic documents from the related ITC Investigation, and they are also admissible under Rule 703 of the Federal Rules of Evidence as having been relied on by Dr. Anthony in forming his opinions in this case. *See* Paper 61, 1; *id.* at 1–5 (argument in

[20] *Available at* https://www.uspto.gov/TrialPracticeGuideConsolidated.

MASIMO 2035
Apple v. Masimo
IPR2024-00242

support). We *deny* this aspect of Masimo's Motion as moot, because we do not rely on these exhibits in this Decision. *See* CTPG 79–80.

Masimo further moves to exclude a portion of Dr. Anthony's testimony (Ex. 1042 ¶ 31) from evidence for lack of foundation and as improper expert testimony, and to exclude the associated Exhibit 1056 ("Fontaine") from evidence for lack of authentication and irrelevancy. *See* Paper 56, 1, 4–8. Apple opposes, based on several arguments. *See* Paper 61, 5–8. We *deny* this aspect of Masimo's Motion as moot, because we do not rely on Fontaine or Dr. Anthony's related testimony in this Decision. *See* CTPG 79–80.

Masimo moreover moves to exclude further portions of Dr. Anthony's testimony (Ex. 1042 ¶¶ 27, 31, 33–34, 40–50, and 61–64) from evidence, as being argument that is improperly incorporated by reference in Apple's Reply, thereby circumventing the Board's word count limitations on briefs. *See* Paper 56, 1, 9–15. Masimo also moves to exclude Apple's Exhibits 1054, 1058, and 1063–1066 from evidence, as being irrelevant if paragraphs 27, 31, and 33–34 of Dr. Anthony's reply testimony is excluded because these exhibits "are cited only in the objected-to paragraphs in Anthony's [reply] declaration." Paper 56, 1, 12. Apple opposes, based on several arguments. *See* Paper 61, 8–15.

We *deny* this final aspect of Masimo's Motion, for two reasons. First, a motion to exclude evidence per 37 C.F.R. § 42.64(c) is not the proper procedural vehicle for a party to urge the Board to enforce the prohibition against incorporating arguments by reference per 37 C.F.R. § 42.6(a)(3). Motions to exclude concern admissibility of evidence under the Federal

MASIMO 2035
Apple v. Masimo
IPR2024-00242

Rules of Evidence, not improper briefing. *See* 37 C.F.R. §§ 42.61–42.64; *see also* CTPG 78–81 (discussing motions to exclude and to strike, and stating the former should not be used to "address arguments or evidence that a party believes exceeds the proper scope of reply"). Masimo knows this, as Masimo sought leave to file a motion to strike to address the incorporation issue, which was denied. *See* Paper 43. Indeed, our Order denying the request stated "[Masimo's] already-authorized Sur-reply is a sufficient procedural vehicle for [Masimo] to press the issues underlying" the requested motion to strike. *Id.* at 2–3. We do not condone Masimo's attempt to circumvent our Order denying Masimo leave to file a motion to strike, by recasting its unauthorized motion to strike as a motion to exclude.

Second, on the merits as to Exhibits 1054, 1058 and 1063–1066, and Dr. Anthony's testimony relating to those exhibits, we have already concluded above in Section III.D.4(d)(v)(1) that Apple's Reply improperly incorporates argument by reference based on positions taken by Masimo in its Sur-Reply. Thus, we *deny* this aspect of Masimo's Motion as moot.

On the merits as to Dr. Anthony's testimony at Exhibit 1042 ¶¶ 40–50, we have considered the pertinent statements in Apple's Reply and the Reply's string cite of various Exhibits from the ITC Investigation. *See* Pet. Reply 22 (line 18) – 23 (line 9). However, we have not considered Dr. Anthony's related testimony in this respect, so we *deny* this aspect of Masimo's Motion as moot. *See* CTPG 79–80.

On the merits as to Dr. Anthony's testimony at Exhibit 1042 ¶¶ 61–64, this testimony concerns Apple's Ground 2B which we do not

MASIMO 2035
Apple v. Masimo
IPR2024-00242

consider in this Decision, so we *deny* this aspect of Masimo's Motion as moot. *See* CTPG 79–80.

V. PETITIONER'S MOTION TO EXCLUDE EVIDENCE

Apple moves to exclude Masimo's proffered witness testimony from the ITC Investigation (Exhibits 2074, 2076–2086, 2089, and 2090) from evidence, as containing inadmissible hearsay.[21] *See* Paper 57, 1–3. Apple also moves to exclude portions of Dr. Duckworth's testimony (Ex. 2070 ¶¶ 22–28, 30–33, 53, 73; Ex. 2100 ¶¶ 32, 44, 51, 57, 64, and 81–95) as relying on that hearsay. *See id.* at 1, 3, 4–5. In support, Apple contends the proffered ITC Investigation testimony consists of "statements made outside of the current trial and . . . offered to prove the truth of the matter asserted in the statements, thereby meeting the definition of hearsay," without any exceptions applying. *Id.* at 2, 5 (citing Fed. R. Evid. 801); *id.* at 2–3 (discussing the "residual exception" per Fed. R. Evid. 807). Masimo opposes, based on several arguments. *See* Paper 58, 1–13.

We *deny* this aspect of Apple's Motion, for three reasons. First, Apple has prevailed on its unpatentability assertions in this proceeding, even considering the subject evidence, so Apple's Motion is moot. Second, we agree with Masimo that the subject testimony and related documents are statements offered against Apple, and made by Apple or individuals in a

[21] Apple's Motion once identifies "Exhibits 2072–2074 and 2076–2092" as the Exhibits at issue. Paper 57, 1. However, this is inconsistent with the rest of Apple's Motion, and Exhibits 2072, 2073, 2087, 2088, 2091, and 2092 have no rational relationship to the argument underlying Apple's Motion.

MASIMO 2035
Apple v. Masimo
IPR2024-00242

representative capacity on behalf of Apple, so they are excluded from hearsay pursuant to Fed. R. Evid. 801(d)(2)(A), (C), & (D). *See* Paper 58, 1–6. Third, the witness testimony was elicited via questioning during the ITC Investigation while the witnesses were under oath, and to a large extent the pertinent questions were posed by Apple's own counsel, as Masimo points out. *See id.* at 2–9. And the documents are Apple's own R&D documents. Therefore, the testimony and documents have sufficient guarantees of trustworthiness, as well as more probity on the points for which they are offered by Masimo than any other evidence Masimo could obtain through reasonable effort, to qualify for the residual exception to hearsay under Fed. R. Evid. 807, with reasonable notice to Apple, as Masimo urges. *See* Paper 58, 2–9.

Apple also moves to exclude portions of Dr. Duckworth's testimony (Ex. 2100 ¶¶ 9, 17, 19, 20, 23, 26, 28, 32, 33, 48, 49, 64, and 69–71) as "contain[ing] opinions that are conclusory, do not disclose supporting facts or data, are based on unreliable facts, data, or methods, and/or include testimony outside the scope of Dr. Duckworth's purported areas of expertise that will not assist the trier of fact." Paper 57, 1, 3–4 (citing Fed. R. Evid. 702 and 703). Masimo opposes, based on several arguments. *See* Paper 58, 2, 13–15.

We *deny* this aspect of Apple's Motion, for several reasons. First, Apple has prevailed on its assertions in this proceeding, even considering the subject evidence, so Apple's Motion is moot. Second, as to the testimony at Exhibit 2100 ¶¶ 19, 20, 23, 26, 28, 32, 33, 48, 49, 64, and 69–71, Apple's Motion makes no attempt to discuss in what way the opinions offered

therein are unsupported by facts or data, despite that it is Apple's burden to establish entitlement to the requested relief. *See* Paper 57, 3–4 (addressing the substance only of ¶¶ 9 and 17); 37 C.F.R. § 42.20(c). Third, as to the testimony at Exhibit 2100 ¶¶ 9 and 17, we have considered Apple's argument, but it goes to the weight to be afforded the testimony rather than its admissibility. *See* CTPG 79 ("A motion to exclude is not a vehicle for addressing the weight to be given evidence—arguments regarding weight should appear only in the merits documents.").

VI. SUMMARY OF CONCLUSIONS

In summary, we determine a preponderance of the evidence establishes claims 1, 9, 15, 18, 20, and 27 of the '745 patent are unpatentable, as shown in the following table:[22]

Claim(s)	35 U.S.C. §	References	Claims Shown Unpatentable	Claims Not Shown Unpatentable
1, 9	103	Iwamiya, Sarantos	1, 9	

[22] Should Patent Owner wish to pursue amendment of the challenged claims in a reissue or reexamination proceeding subsequent to the issuance of this decision, we draw Patent Owner's attention to the April 2019 *Notice Regarding Options for Amendments by Patent Owner Through Reissue or Reexamination During a Pending AIA Trial Proceeding*. *See* 84 Fed. Reg. 16,654 (Apr. 22, 2019). If Patent Owner chooses to file a reissue application or a request for reexamination of the challenged patent, we remind Patent Owner of its continuing obligation to notify the Board of any such related matters in updated mandatory notices. *See* 37 C.F.R. § 42.8(a)(3), (b)(2).

MASIMO 2035
Apple v. Masimo
IPR2024-00242

15, 18, 20, 27	103	Iwamiya, Sarantos, Venkatraman	15, 18, 20, 27	
1, 9, 15, 18	103	Sarantos, Shie[23]		
15, 18, 20, 27	103	Sarantos, Shie, Venkatraman[23]		
Overall Outcome			1, 9, 15, 18, 20, 27	

VII. ORDER

In consideration of the foregoing, it is hereby:

ORDERED that claims 1, 9, 15, 18, 20, and 27 of the '745 patent have been proven by a preponderance of the evidence to be unpatentable; and

FURTHER ORDERED that Patent Owner's Motion to Exclude (Paper 56) is *denied*;

FURTHER ORDERED that Petitioner's Motion to Exclude (Paper 57) is *denied*;

FURTHER ORDERED that the parties are to jointly file a redacted, public version of this Decision no later than three weeks following the entry of this Decision; and

[23] As explained in Section III.F above, we do not reach these two grounds, because all of the challenged claims are unpatentable based on Grounds 1A and 1B.

MASIMO 2035
Apple v. Masimo
IPR2024-00242

FURTHER ORDERED that, because this is a final written decision, parties to this proceeding seeking judicial review of our Decision must comply with the notice and service requirements of 37 C.F.R. § 90.2.

FOR PETITIONER:

W. Karl Renner
Nicholas Stephens
Andrew B. Patrick
Kim Leung
Patrick J. Bisenius
Patrick J. King
FISH & RICHARDSON P.C.
axf-ptab@fr.com
nstephens@fr.com
patrick@fr.com
leung@fr.com
bisenius@fr.com
pking@fr.com

FOR PATENT OWNER:

Brian Claassen
Carol Pitzel Cruz
Daniel C. Kiang
Jeremiah S. Helm
KNOBBE, MARTENS, OLSON, & BEAR, LLP
2bcc@knobbe.com
2cmp@knobbe.com
2dck@knobbe.com
2jgh@knobbe.com

MASIMO 2035
Apple v. Masimo
IPR2024-00242