Doc Code: TRACK1.REQ
Document Description: TrackOne Request

PTO/AIA/424 (04-14)

CERTIFICATION AND REQUEST FOR PRIORITIZED EXAMINATION UNDER 37 CFR 1.102(e) (Page 1 of 1)

First Named Inventor:	Ammar Al-Ali	Nonprovisional Application Number (if known):	Unassigned
Title of Invention:	ADVANCED PULSE OXIMETRY SENSOR		

APPLICANT HEREBY CERTIFIES THE FOLLOWING AND REQUESTS PRIORITIZED EXAMINATION FOR THE ABOVE-IDENTIFIED APPLICATION.

1. The processing fee set forth in 37 CFR 1.17(i)(1) and the prioritized examination fee set forth in 37 CFR 1.17(c) have been filed with the request. The publication fee requirement is met because that fee, set forth in 37 CFR 1.18(d), is currently $0. The basic filing fee, search fee, and examination fee are filed with the request or have been already been paid. I understand that any required excess claims fees or application size fee must be paid for the application.

2. I understand that the application may not contain, or be amended to contain, more than four independent claims, more than thirty total claims, or any multiple dependent claims, and that any request for an extension of time will cause an outstanding Track I request to be dismissed.

3. The applicable box is checked below:

I. ☑ Original Application (Track One) - Prioritized Examination under § 1.102(e)(1)

i. (a) The application is an original nonprovisional utility application filed under 35 U.S.C. 111(a). This certification and request is being filed with the utility application via EFS-Web.

---OR---

(b) The application is an original nonprovisional plant application filed under 35 U.S.C. 111(a). This certification and request is being filed with the plant application in paper.

ii. An executed inventor's oath or declaration under 37 CFR 1.63 or 37 CFR 1.64 for each inventor, **or** the application data sheet meeting the conditions specified in 37 CFR 1.53(f)(3)(i) is filed with the application.

II. ☐ Request for Continued Examination - Prioritized Examination under § 1.102(e)(2)

i. A request for continued examination has been filed with, or prior to, this form.
ii. If the application is a utility application, this certification and request is being filed via EFS-Web.
iii. The application is an original nonprovisional utility application filed under 35 U.S.C. 111(a), or is a national stage entry under 35 U.S.C. 371.
iv. This certification and request is being filed prior to the mailing of a first Office action responsive to the request for continued examination.
v. No prior request for continued examination has been granted prioritized examination status under 37 CFR 1.102(e)(2).

Signature /Aaron S. Johnson/	Date 2019-08-05
Name (Print/Typed) Aaron S. Johnson	Practitioner Registration Number 74164

Note: *This form must be signed in accordance with 37 CFR 1.33. See 37 CFR 1.4(d) for signature requirements and certifications. Submit multiple forms if more than one signature is required.**

☑ *Total of 1 forms are submitted.

MASIMO 2056
Apple v. Masimo
IPR2024-00242

Privacy Act Statement

The **Privacy Act of 1974 (P.L. 93-579)** requires that you be given certain information in connection with your submission of the attached form related to a patent application or patent. Accordingly, pursuant to the requirements of the Act, please be advised that: (1) the general authority for the collection of this information is 35 U.S.C. 2(b)(2); (2) furnishing of the information solicited is voluntary; and (3) the principal purpose for which the information is used by the U.S. Patent and Trademark Office is to process and/or examine your submission related to a patent application or patent. If you do not furnish the requested information, the U.S. Patent and Trademark Office may not be able to process and/or examine your submission, which may result in termination of proceedings or abandonment of the application or expiration of the patent.

The information provided by you in this form will be subject to the following routine uses:

1. The information on this form will be treated confidentially to the extent allowed under the Freedom of Information Act (5 U.S.C. 552) and the Privacy Act (5 U.S.C 552a). Records from this system of records may be disclosed to the Department of Justice to determine whether disclosure of these records is required by the Freedom of Information Act.
2. A record from this system of records may be disclosed, as a routine use, in the course of presenting evidence to a court, magistrate, or administrative tribunal, including disclosures to opposing counsel in the course of settlement negotiations.
3. A record in this system of records may be disclosed, as a routine use, to a Member of Congress submitting a request involving an individual, to whom the record pertains, when the individual has requested assistance from the Member with respect to the subject matter of the record.
4. A record in this system of records may be disclosed, as a routine use, to a contractor of the Agency having need for the information in order to perform a contract. Recipients of information shall be required to comply with the requirements of the Privacy Act of 1974, as amended, pursuant to 5 U.S.C. 552a(m).
5. A record related to an International Application filed under the Patent Cooperation Treaty in this system of records may be disclosed, as a routine use, to the International Bureau of the World Intellectual Property Organization, pursuant to the Patent Cooperation Treaty.
6. A record in this system of records may be disclosed, as a routine use, to another federal agency for purposes of National Security review (35 U.S.C. 181) and for review pursuant to the Atomic Energy Act (42 U.S.C. 218(c)).
7. A record from this system of records may be disclosed, as a routine use, to the Administrator, General Services, or his/her designee, during an inspection of records conducted by GSA as part of that agency's responsibility to recommend improvements in records management practices and programs, under authority of 44 U.S.C. 2904 and 2906. Such disclosure shall be made in accordance with the GSA regulations governing inspection of records for this purpose, and any other relevant (*i.e.*, GSA or Commerce) directive. Such disclosure shall not be used to make determinations about individuals.
8. A record from this system of records may be disclosed, as a routine use, to the public after either publication of the application pursuant to 35 U.S.C. 122(b) or issuance of a patent pursuant to 35 U.S.C. 151. Further, a record may be disclosed, subject to the limitations of 37 CFR 1.14, as a routine use, to the public if the record was filed in an application which became abandoned or in which the proceedings were terminated and which application is referenced by either a published application, an application open to public inspection or an issued patent.
9. A record from this system of records may be disclosed, as a routine use, to a Federal, State, or local law enforcement agency, if the USPTO becomes aware of a violation or potential violation of law or regulation.

MASIMO 2056
Apple v. Masimo
IPR2024-00242

ADVANCED PULSE OXIMETRY SENSOR

INCORPORATION BY REFERENCE TO ANY PRIORITY APPLICATIONS

[0001] The present application is a continuation of U.S. Patent Application No. 16/226,249 filed December 19, 2018, which is a continuation of U.S. Patent Application No. 15/195,199 filed June 28, 2016, which claims priority benefit under 35 U.S.C. § 119(e) from U.S. Provisional Application No. 62/188,430, filed July 2, 2015, entitled "Advanced Pulse Oximetry Sensor," which is incorporated by reference herein. Any and all applications for which a foreign or domestic priority claim is identified in the Application Data Sheet as filed with the present application are hereby incorporated by reference under 37 CFR 1.57.

FIELD OF THE DISCLOSURE

[0002] The present disclosure relates to the field of non-invasive optical-based physiological monitoring sensors, and more particularly to systems, devices and methods for improving the non-invasive measurement accuracy of oxygen saturation, among other physiological parameters.

BACKGROUND

[0003] Spectroscopy is a common technique for measuring the concentration of organic and some inorganic constituents of a solution. The theoretical basis of this technique is the Beer-Lambert law, which states that the concentration c_i of an absorbent in solution can be determined by the intensity of light transmitted through the solution, knowing the pathlength d_λ, the intensity of the incident light $I_{0,\lambda}$, and the extinction coefficient $\varepsilon_{i,\lambda}$ at a particular wavelength λ.

[0004] In generalized form, the Beer-Lambert law is expressed as:

$$I_\lambda = I_{0,\lambda} e^{-d_\lambda \cdot \mu_{a,\lambda}} \quad (1)$$

$$\mu_{a,\lambda} = \sum_{i=1}^{n} \varepsilon_{i,\lambda} \cdot c_i \quad (2)$$

MASIMO 2056
Apple v. Masimo
IPR2024-00242

where $\mu_{\alpha,\lambda}$ is the bulk absorption coefficient and represents the probability of absorption per unit length. The minimum number of discrete wavelengths that are required to solve equations 1 and 2 is the number of significant absorbers that are present in the solution.

[0005] A practical application of this technique is pulse oximetry, which utilizes a noninvasive sensor to measure oxygen saturation and pulse rate, among other physiological parameters. Pulse oximetry relies on a sensor attached externally to the patient to output signals indicative of various physiological parameters, such as a patient's blood constituents and/or analytes, including for example a percent value for arterial oxygen saturation, among other physiological parameters. The sensor has an emitter that transmits optical radiation of one or more wavelengths into a tissue site and a detector that responds to the intensity of the optical radiation after absorption by pulsatile arterial blood flowing within the tissue site. Based upon this response, a processor determines the relative concentrations of oxygenated hemoglobin (HbO_2) and deoxygenated hemoglobin (Hb) in the blood so as to derive oxygen saturation, which can provide early detection of potentially hazardous decreases in a patient's oxygen supply.

[0006] A pulse oximetry system generally includes a patient monitor, a communications medium such as a cable, and/or a physiological sensor having one or more light emitters and a detector, such as one or more light-emitting diodes (LEDs) and a photodetector. The sensor is attached to a tissue site, such as a finger, toe, earlobe, nose, hand, foot, or other site having pulsatile blood flow which can be penetrated by light from the one or more emitters. The detector is responsive to the emitted light after attenuation or reflection by pulsatile blood flowing in the tissue site. The detector outputs a detector signal to the monitor over the communication medium. The monitor processes the signal to provide a numerical readout of physiological parameters such as oxygen saturation (SpO2) and/or pulse rate. A pulse oximetry sensor is described in U.S. Patent No. 6,088,607 entitled *Low Noise Optical Probe*; pulse oximetry signal processing is described in U.S. Patent Nos. 6,650,917 and 6,699,194 entitled *Signal Processing Apparatus* and *Signal Processing Apparatus and Method*, respectively; a pulse oximeter monitor is

MASIMO 2056
Apple v. Masimo
IPR2024-00242

described in U.S. Patent No. 6,584,336 entitled *Universal/Upgrading Pulse Oximeter*; all of which are assigned to Masimo Corporation, Irvine, CA, and each is incorporated by reference herein in its entirety.

[0007] There are many sources of measurement error introduced to pulse oximetry systems. Some such sources of error include the pulse oximetry system's electronic components, including emitters and detectors, as well as chemical and structural physiological differences between patients. Another source of measurement error is the effect of multiple scattering of photons as the photons pass through the patient's tissue (arterial blood) and arrive at the sensor's light detector.

SUMMARY

[0008] This disclosure describes embodiments of non-invasive methods, devices, and systems for measuring blood constituents, analytes, and/or substances such as, by way of non-limiting example, oxygen, carboxyhemoglobin, methemoglobin, total hemoglobin, glucose, proteins, lipids, a percentage thereof (*e.g.,* saturation), pulse rate, perfusion index, oxygen content, total hemoglobin, Oxygen Reserve Index™ (ORI™) or for measuring many other physiologically relevant patient characteristics. These characteristics can relate to, for example, pulse rate, hydration, trending information and analysis, and the like.

[0009] In an embodiment, an optical physiological measurement system includes an emitter configured to emit light of one or more wavelengths. The system also includes a diffuser configured to receive the emitted light, to spread the received light, and to emit the spread light over a larger tissue area than would otherwise be penetrated by the emitter directly emitting light at a tissue measurement site. The tissue measurement site can include, such as, for example, a finger, a wrist, or the like. The system further includes a concentrator configured to receive the spread light after it has been attenuated by or reflected from the tissue measurement site. The concentrator is also configured to collect and concentrate the received light and to emit the concentrated light to a detector. The detector is configured to detect the concentrated light and to transmit a signal indicative of the

MASIMO 2056
Apple v. Masimo
IPR2024-00242

detected light. The system also includes a processor configured to receive the transmitted signal indicative of the detected light and to determine, based on an amount of absorption, an analyte of interest, such as, for example, arterial oxygen saturation or other parameter, in the tissue measurement site.

[0010] In certain embodiments of the present disclosure, the diffuser comprises glass, ground glass, glass beads, opal glass, or a microlens-based, band-limited, engineered diffuser that can deliver efficient and uniform illumination. In some embodiments the diffuser is further configured to define a surface area shape by which the emitted spread light is distributed onto a surface of the tissue measurement site. The defined surface area shape can include, by way of non-limiting example, a shape that is substantially rectangular, square, circular, oval, or annular, among others.

[0011] According to some embodiments, the optical physiological measurement system includes an optical filter having a light-absorbing surface that faces the tissue measurement site. The optical filter also has an opening that is configured to allow the spread light, after being attenuated by the tissue measurement site, to be received by the concentrator. In an embodiment, the opening has dimensions, wherein the dimensions of the opening are similar to the defined surface area shape by which the emitted spread light is distributed onto the surface of the tissue measurement site. In an embodiment, the opening has dimensions that are larger than the defined surface area shape by which the emitted spread light is distributed onto the surface of the tissue measurement site. In other embodiments, the dimensions of the opening in the optical filter are not the same as the diffuser opening, but the dimensions are larger than the detector package.

[0012] In other embodiments of the present disclosure, the concentrator comprises glass, ground glass, glass beads, opal glass, or a compound parabolic concentrator. In some embodiments the concentrator comprises a cylindrical structure having a truncated circular conical structure on top. The truncated section is adjacent the detector. The light concentrator is structured to receive the emitted optical radiation, after reflection by the tissue measurement site, and to direct the reflected light to the detector.

MASIMO 2056
Apple v. Masimo
IPR2024-00242

[0013] In accordance with certain embodiments of the present disclosure, the processor is configured to determine an average level of the light detected by the detector. The average level of light is used to determine a physiological parameter in the tissue measurement site.

[0014] According to another embodiment, a method to determine a constituent or analyte in a patient's blood is disclosed. The method includes emitting, from an emitter, light of at least one wavelength; spreading, with a diffuser, the emitted light and emitting the spread light from the diffuser to a tissue measurement site; receiving, by a concentrator, the spread light after the spread light has been attenuated by the tissue measurement site; concentrating, by the concentrator, the received light and emitting the concentrated light from the concentrator to a detector; detecting, with the detector, the emitted concentrated light; transmitting, from the detector, a signal responsive to the detected light; receiving, by a processor, the transmitted signal responsive to the detected light; and processing, by the processor, the received signal responsive to the detected light to determine a physiological parameter.

[0015] In some embodiments, the method to determine a constituent or analyte in a patient's blood includes filtering, with a light-absorbing detector filter, scattered portions of the emitted spread light. According to an embodiment, the light-absorbing detector filter is substantially rectangular in shape and has outer dimensions in the range of approximately 1-5 cm in width and approximately 2-8 cm in length, and has an opening through which emitted light may pass, the opening having dimensions in the range of approximately 0.25-3 cm in width and approximately 1-7 cm in length. In another embodiment, the light-absorbing detector filter is substantially square in shape and has outer dimensions in the range of approximately 0.25-10 cm^2, and has an opening through which emitted light may pass, the opening having dimensions in the range of approximately 0.1-8cm^2. In yet another embodiment, the light-absorbing detector filter is substantially rectangular in shape and has outer dimensions of approximately 3 cm in width and approximately 6 cm in length, and has an opening through which emitted light may pass, the

MASIMO 2056
Apple v. Masimo
IPR2024-00242

opening having dimensions of approximately 1.5 cm in width and approximately 4 cm in length.

[0016] In still other embodiments of the method to determine a constituent or analyte in a patient's blood, spreading, with a diffuser, the emitted light and emitting the spread light from the diffuser to a tissue measurement site is performed by at least one of a glass diffuser, a ground glass diffuser, a glass bead diffuser, an opal glass diffuser, and an engineered diffuser. In some embodiments the emitted spread light is emitted with a substantially uniform intensity profile. And in some embodiments, emitting the spread light from the diffuser to the tissue measurement site includes spreading the emitted light so as to define a surface area shape by which the emitted spread light is distributed onto a surface of the tissue measurement site.

[0017] According to yet another embodiment, a pulse oximeter is disclosed. The pulse oximeter includes an emitter configured to emit light at one or more wavelengths. The pulse oximeter also includes a diffuser configured to receive the emitted light, to spread the received light, and to emit the spread light directed at a tissue measurement sight. The pulse oximeter also includes a detector configured to detect the emitted spread light after being attenuated by or reflected from the tissue measurement site and to transmit a signal indicative of the detected light. The pulse oximeter also includes a processor configured to receive the transmitted signal and to process the received signal to determine an average absorbance of a blood constituent or analyte in the tissue measurement site over a larger measurement site area than can be performed with a point light source or point detector. In some embodiments, the diffuser is further configured to define a surface area shape by which the emitted spread light is distributed onto a surface of the tissue measurement site, and the detector is further configured to have a detection area corresponding to the defined surface area shape by which the emitted spread light is distributed onto the surface of the tissue measurement site. According to some embodiments, the detector comprises an array of detectors configured to cover the detection area. In still other embodiments, the processor is further configured to determine an average of the detected light.

MASIMO 2056
Apple v. Masimo
IPR2024-00242

[0018] For purposes of summarizing, certain aspects, advantages and novel features of the disclosure have been described herein. It is to be understood that not necessarily all such advantages can be achieved in accordance with any particular embodiment of the systems, devices and/or methods disclosed herein. Thus, the subject matter of the disclosure herein can be embodied or carried out in a manner that achieves or optimizes one advantage or group of advantages as taught herein without necessarily achieving other advantages as can be taught or suggested herein.

BRIEF DESCRIPTION OF THE DRAWINGS

[0019] Throughout the drawings, reference numbers can be re-used to indicate correspondence between referenced elements. The drawings are provided to illustrate embodiments of the disclosure described herein and not to limit the scope thereof.

[0020] FIG. 1 illustrates a conventional approach to 2D pulse oximetry in which the emitter is configured to emit optical radiation as a point optical source.

[0021] FIG. 2 illustrates the disclosed 3D approach to pulse oximetry in which the emitted light irradiates a substantially larger volume of tissue as compared to the point source approach described with respect to FIG. 2A.

[0022] FIG. 3 illustrates schematically a side view of a 3D pulse oximetry sensor according to an embodiment of the present disclosure.

[0023] FIG. 4A is a top view of a portion of a 3D pulse oximetry sensor according to an embodiment of the present disclosure.

[0024] FIG. 4B illustrates the top view of a portion of the 3D pulse oximetry sensor shown in FIG. 4A, with the addition of a tissue measurement site in operational position.

[0025] FIG. 5 illustrates a top view of a 3D pulse oximetry sensor according to an embodiment of the present disclosure.

[0026] FIG. 6 illustrates a conventional 2D approach to reflective pulse oximetry in which the emitter is configured to emit optical radiation as a point optical source.

MASIMO 2056
Apple v. Masimo
IPR2024-00242

[0027] FIG. 7A is a simplified schematic side view illustration of a reflective 3D pulse oximetry sensor according to an embodiment of the present disclosure.

[0028] FIG. 7B is a simplified schematic top view illustration of the 3D reflective pulse oximetry sensor of FIG. 7A.

[0029] FIG. 8 illustrates a block diagram of an example pulse oximetry system capable of noninvasively measuring one or more blood analytes in a monitored patient, according to an embodiment of the disclosure.

DETAILED DESCRIPTION

[0030] FIG. 1 illustrates schematically a conventional pulse oximetry sensor having a two-dimensional (2D) approach to pulse oximetry. As illustrated, the emitter 104 is configured to emit optical radiation as a point optical source, *i.e.,* an optical radiation source that has negligible dimensions such that it may be considered as a point. This approach is referred to herein as "two-dimensional" pulse oximetry because it applies a two-dimensional analytical model to the three-dimensional space of the tissue measurement site 102 of the patient. Point optical sources feature a defined, freely selectable, and homogeneous light beam area. Light beams emitted from LED point sources often exhibit a strong focus which can produce a usually sharply-defined and evenly-lit illuminated spot often with high intensity dynamics. Illustratively, when looking at the surface of the tissue measurement site 102 (or "sample tissue"), which in this example is a finger, a small point-like surface area of tissue 204 is irradiated by a point optical source. In some embodiments, the irradiated circular area of the point optical source is in the range between 8 and 150 microns. Illustratively, the emitted point optical source of light enters the tissue measurement site 102 as a point of light. As the light penetrates the depth of the tissue 102, it does so as a line or vector, representing a two-dimensional construct within a three-dimensional structure, namely the patient's tissue 102.

[0031] Use of a point optical source is believed to reduce variability in light pathlength which would lead to more accurate oximetry measurements. However, in practice, photons do not travel in straight paths. Instead, the light particles scatter,

MASIMO 2056
Apple v. Masimo
IPR2024-00242

bouncing around between various irregular objects (such as, for example, red blood cells) in the patient's blood. Accordingly, photon pathlengths vary depending on, among other things, their particular journeys through and around the tissue at the measurement site 102. This phenomenon is referred to as "multiple scattering." In a study, the effects of multiple scattering were examined by comparing the results of photon diffusion analysis with those obtained using an analysis based on the Beer-Lambert law, which neglects multiple scattering in the determination of light pathlength. The study found that that the difference between the average lengths of the paths traveled by red and infrared photons makes the oximeter's calibration curve (based on measurements obtained from normal subjects) sensitive to the total attenuation coefficients of the tissue in the two wavelength bands used for pulse oximetry, as well as to absorption by the pulsating arterial blood.

[0032] FIG. 2 illustrates schematically the disclosed systems, devices, and methods to implement three-dimensional (3D) pulse oximetry in which the emitted light irradiates a larger volume of tissue at the measurement site 102 as compared to the 2D point optical source approach described with respect to FIG. 1. In an embodiment, again looking at the surface of the tissue measurement site 102, the irradiated surface area 206 of the measurement site 102 is substantially rectangular in shape with dimensions in the range of approximately 0.25-3 cm in width and approximately 1-6 cm in length. In another embodiment, the irradiated surface area 206 of the measurement site 102 is substantially rectangular in shape and has dimensions of approximately 1.5 cm in width and approximately 2 cm in length. In another embodiment, the irradiated surface area 206 of the measurement site 102 is substantially rectangular in shape and has dimensions of approximately 0.5 cm in width and approximately 1 cm in length. In another embodiment, the irradiated surface area 206 of the measurement site 102 is substantially rectangular in shape has dimensions of approximately 1 cm in width and approximately 1.5 cm in length. In yet another embodiment, the irradiated surface area 206 of the measurement site 102 is substantially square in shape and has dimensions in a range of approximately 0.25-9 cm^2. In certain embodiments, the irradiated surface area 206 of the measurement site 102 is within a range of approximately 0.5-2 cm in width, and

MASIMO 2056
Apple v. Masimo
IPR2024-00242

approximately 1-4 cm in length. Of course a skilled artisan will appreciate that many other shapes and dimensions of irradiated surface area 206 can be used. Advantageously, by irradiating the tissue measurement site 102 with a surface area 206, the presently disclosed systems, devices, and methods apply a three-dimensional analytical model to the three-dimensional structure being measured, namely, the patient's sample tissue 102.

[0033] According to the Beer-Lambert law, the amount of light absorbed by a substance is proportional to the concentration of the light-absorbing substance in the irradiated solution (*i.e.*, arterial blood). Advantageously, by irradiating a larger volume of tissue 102, a larger sample size of light attenuated (or reflected) by the tissue 102 is measured. The larger, 3D sample provides a data set that is more representative of the complete interaction of the emitted light as it passes through the patient's blood as compared to the 2D point source approach described above with respect to FIG. 1. By taking an average of the detected light, as detected over a surface area substantially larger than a single point, the disclosed pulse oximetry systems, devices, and methods will yield a more accurate measurement of the emitted light absorbed by the tissue, which will lead to a more accurate oxygen saturation measurement.

[0034] FIG. 3 illustrates schematically a side view of a pulse oximetry 3D sensor 300 according to an embodiment of the present disclosure. In the illustrated embodiment, the 3D sensor 300 irradiates the tissue measurement site 102 and detects the emitted light, after being attenuated by the tissue measurement site 102. In other embodiments, for example, as describe below with respect to FIGS. 7A and 7B, the 3D sensor 300 can be arranged to detect light that is reflected by the tissue measurement site 102. The 3D sensor 300 includes an emitter 302, a light diffuser 304, a light-absorbing detector filter 306, a light concentrator 308, and a detector 310. In some optional embodiments, the 3D sensor 300 further includes a reflector 305. The reflector 305 can be a metallic reflector or other type of reflector. Reflector 305 can be a coating, film, layer or other type of reflector. The reflector 305 can serve as a reflector to prevent emitted light from emitting out of a top portion of the light diffuser 304 such that light from the emitter 302 is directed in the

MASIMO 2056
Apple v. Masimo
IPR2024-00242

tissue rather than escaping out of a side or top of the light diffuser 304. Additionally, the reflector 305 can prevent ambient light from entering the diffuser 304 which might ultimately cause errors within the detected light. The reflector 305 also prevent light piping that might occur if light from the detector 302 is able to escape from the light diffuser 304 and be pipped around a sensor securement mechanism to detector 310 without passing through the patient's tissue 102.

[0035] The emitter 302 can serve as the source of optical radiation transmitted towards the tissue measurement site 102. The emitter 302 can include one or more sources of optical radiation, such as LEDs, laser diodes, incandescent bulbs with appropriate frequency-selective filters, combinations of the same, or the like. In an embodiment, the emitter 302 includes sets of optical sources that are capable of emitting visible and near-infrared optical radiation. In some embodiments, the emitter 302 transmits optical radiation of red and infrared wavelengths, at approximately 650 nm and approximately 940 nm, respectively. In some embodiments, the emitter 302 includes a single source optical radiation.

[0036] The light diffuser 304 receives the optical radiation emitted from the emitter 302 and spreads the optical radiation over an area, such as the area 206 depicted in FIG. 2. In some embodiments, the light diffuser 304 is a beam shaper that can homogenize the input light beam from the emitter 302, shape the output intensity profile of the received light, and define the way (*e.g.,* the shape or pattern) the emitted light is distributed to the tissue measurement site 102. Examples of materials that can be used to realize the light diffuser 304 include, without limitation, a white surface, glass, ground glass, glass beads, polytetrafluoroethylene (also known as Teflon®, opal glass, and greyed glass, to name a few. Additionally, engineered diffusers can be used to realize the diffuser 304 by providing customized light shaping with respect to intensity and distribution. Such diffusers can, for example, deliver substantially uniform illumination over a specified target area (such as, for example, irradiated surface area 206) in an energy-efficient manner. Examples of engineered diffusers can include molded plastics with specific shapes, patterns or textures designed to diffuse the emitter light across the entirety of the patient's tissue surface.

MASIMO 2056
Apple v. Masimo
IPR2024-00242

[0037] Advantageously, the diffuser 304 can receive emitted light in the form of a point optical source and spread the light to fit a desired surface area on a plane defined by the surface of the tissue measurement site 102. In an embodiment, the diffuser 304 is made of ground glass which spreads the emitted light with a Gausian intensity profile. In another embodiment the diffuser 304 includes glass beads. In some embodiments, the diffuser 304 is constructed so as to diffuse the emitted light in a Lambertian pattern. A Lambertian pattern is one in which the radiation intensity is substantially constant throughout the area of dispersion. One such diffuser 304 is made from opal glass. Opal glass is similar to ground glass, but has one surface coated with a milky white coating to diffuse light evenly. In an embodiment, the diffuser 304 is capable of distributing the emitted light on the surface of a plane (*e.g.,* the surface of the tissue measurement site 102) in a predefined geometry (*e.g.,* a rectangle, square, or circle), and with a substantially uniform intensity profile and energy distribution. In some embodiments, the efficiency, or the amount of light transmitted by the diffuser 304, is greater than 70% of the light emitted by the emitter 302. In some embodiments, the efficiency is greater than 90% of the emitted light. Other optical elements known in the art may be used for the diffuser 304.

[0038] In an embodiment, the diffuser 304 has a substantially rectangular shape having dimensions within a range of approximately 0.5-2 cm in width and approximately 1-4 centimeters in length. In another embodiment, the substantially rectangular shape of the diffuser 304 has dimensions of approximately 0.5 cm in width and approximately 1 cm in length. In another embodiment, the diffuser's 304 substantially rectangular shape has dimensions of approximately 1 cm in width and approximately 1.5 cm in length. In yet another embodiment, the diffuser 304 has a substantially square shape with dimensions in the range of approximately 0.25-10 cm^2.

[0039] The light-absorbing detector filter 306, which is also depicted in FIG. 4A in a top view, is a planar surface having an opening 402 through which the emitted light may pass after being attenuated by the tissue measurement site 102. In the depicted embodiment, the opening 402 is rectangular-shaped, with

MASIMO 2056
Apple v. Masimo
IPR2024-00242

dimensions substantially similar to the irradiated surface area 206. According to an embodiment, the light-absorbing detector filter is substantially rectangular in shape and has outer dimensions of 4 cm in width and 8 cm in length, and has an opening through which emitted light may pass, the opening having dimensions of 2 cm in width and 5 cm in length. In another embodiment, the light-absorbing detector filter is substantially rectangular in shape and has outer dimensions in the range of 1-3 cm in width and 2-8 cm in length, and has an opening through which emitted light may pass, the opening having dimensions in the range of 0.25-2 cm in width and 1-4 cm in length. In yet another embodiment, the light-absorbing detector filter is substantially rectangular in shape and has outer dimensions of 3 cm in width and 6 cm in length, and has an opening through which emitted light may pass, the opening having dimensions of 1.5 cm in width and 4 cm in length.

[0040] The top surface of the light-absorbing filter 306 (facing the tissue measurement site 102 and the emitter 302) is coated with a material that absorbs light, such as, for example, black pigment. Many other types of light-absorbing materials are well known in the art and can be used with the detector filter 306. During operation, light emitted from the emitter 302 can reflect off of the tissue measurement site 102 (or other structures within the 3D sensor 300) to neighboring portions of the 3D sensor 300. If those neighboring portions of the 3D sensor 300 possess reflective surfaces, then the light can reflect back to the tissue measurement site 102, progress through the tissue and arrive at the detector 310. Such multiple scattering can result in detecting photons whose pathlengths are considerably longer than most of the light that is detected, thereby introducing variations in pathlength which will affect the accuracy of the measurements of the pulse oximetry 3D sensor 300. Advantageously, the light-absorbing filter 306 reduces or eliminates the amount of emitted light that is reflected in this manner because it absorbs such reflected light, thereby stopping the chain of scattering events. In certain embodiments, the sensor-facing surfaces of other portions of the 3D sensor 300 are covered in light-absorbing material to further decrease the effect of reflective multiple scattering.

MASIMO 2056
Apple v. Masimo
IPR2024-00242

[0041] The light concentrator 308 is a structure to receive the emitted optical radiation, after attenuation by the tissue measurement site 102, to collect and concentrate the dispersed optical radiation, and to direct the collected and concentrated optical radiation to the detector 310. In an embodiment, the light concentrator 308 is made of ground glass or glass beads. In some embodiments, the light concentrator 308 includes a compound parabolic concentrator.

[0042] As described above with respect to FIG. 1, the detector 310 captures and measures light from the tissue measurement site 102. For example, the detector 310 can capture and measure light transmitted from the emitter 302 that has been attenuated by the tissue in the measurement site 102. The detector 310 can output a detector signal responsive to the light captured or measured. The detector 310 can be implemented using one or more photodiodes, phototransistors, or the like. In addition, a plurality of detectors 310 can be arranged in an array with a spatial configuration corresponding to the irradiated surface area 206 to capture the attenuated or reflected light from the tissue measurement site.

[0043] Referring to FIG. 4A, a top view of a portion of the 3D sensor 300 is provided. The light-absorbing detector filter 306 is illustrated having a top surface coated with a light-absorbing material. The light-absorbing material can be a black opaque material or coating or any other dark color or coating configured to absorb light. Additionally, a rectangular opening 402 is positioned relative to the light concentrator 308 (shown in phantom) and the detector 310 such that light may pass through the rectangular opening 402, into the light concentrator 308, and to the detector 310. FIG. 4B illustrates the top view of a portion of the 3D sensor 300 as in FIG. 4A, with the addition of the tissue measurement site 102 in operational position. Accordingly, the rectangular opening 402, the light concentrator 308 and the detector 310 are shown in phantom as being under the tissue measurement site 102. In FIGS. 4A and 4B, the light concentrator 308 is shown to have dimensions significantly larger than the dimensions of the rectangular opening 402. In other embodiments, the dimensions of the light concentrator 308, the rectangular opening 402, and the irradiated surface area 206 are substantially similar.

MASIMO 2056
Apple v. Masimo
IPR2024-00242

[0044] FIG. 5 illustrates a top view of a 3D pulse oximetry sensor 500 according to an embodiment of the present disclosure. The 3D sensor 500 is configured to be worn on a patient's finger 102. The 3D sensor 500 includes an adhesive substrate 502 having front flaps 504 and rear flaps 506 extending outward from a center portion 508 of the 3D sensor 500. The center portion 508 includes components of the 3D pulse oximetry sensor 300 described with respect to FIGS. 3, 4A and 4B. On the front side of the adhesive substrate 502 the emitter 302 and the light diffuser 304 are positioned. On the rear side of the adhesive substrate 502 the light-absorbent detector filter 306, the light concentrator 308 and the detector 310 are positioned. In use, the patient's finger serving as the tissue measurement site 102 is positioned over the rectangular opening 402 such that when the front portion of the adhesive substrate is folded over on top of the patient's finger 102, the emitter 302 and the light diffuser 304 are aligned with the measurement site 102, the filter 306, the light concentrator 308 and the detector 310. Once alignment is established, the front and rear flaps 504, 506 can be wrapped around the finger measurement site 102 such that the adhesive substrate 502 provides a secure contact between the patient's skin and the 3D sensor 500. Fig. 5 also illustrates an example of a sensor connector cable 510 which is used to connect the 3D sensor 500 to a monitor 809, as described with respect to FIG. 8.

[0045] FIG. 6 is a simplified schematic illustration of a conventional, 2D approach to reflective pulse oximetry in which the emitter is configured to emit optical radiation as a point optical source. Reflective pulse oximetry is a method by which the emitter and detector are located on the same side of the tissue measurement site 102. Light is emitted into a tissue measurement site 102 and attenuated. The emitted light passes into the tissue 102 and is then reflected back to the same side of the tissue measurement site 102 as the emitter. As illustrated in FIG. 6, a depicted reflective 2D pulse oximetry sensor 600 includes an emitter 602, a light block 606, and a detector 610. The light block 606 is necessary because the emitter 602 and the detector 610 are located on the same side of the tissue measurement site 102. Accordingly, the light block 606 prevents incident emitter light, which did not enter the tissue measurement site 102, from arriving at the

MASIMO 2056
Apple v. Masimo
IPR2024-00242

detector 610. The depicted 2D pulse oximetry sensor 600 is configured to emit light as a point source. As depicted in FIG. 6, a simplified illustration of the light path 620 of the emitted light from the emitter 602, through the tissue measurement site 102, and to the detector 610 is provided. Notably, a point source of light is emitted, and a point source of light is detected. As discussed above with respect to FIG. 1, use of a point optical source can result in substantial measurement error due to pathlength variability resulting from the multiple scatter phenomenon. The sample space provided by a 2D point optical emitter source is not large enough to account for pathlength variability, which will skew measurement results.

[0046] FIGS. 7A and 7B are simplified schematic side and top views, respectively, of a 3D reflective pulse oximetry sensor 700 according to an embodiment of the present disclosure. In the illustrated embodiment, the 3D sensor 700 irradiates the tissue measurement site 102 and detects the emitted light that is reflected by the tissue measurement site 102. The 3D sensor 700 can be placed on a portion of the patient's body that has relatively flat surface, such as, for example a wrist, because the emitter 702 and detector 710 are on located the same side of the tissue measurement site 102. The 3D sensor 700 includes an emitter 702, a light diffuser 704, a light block 706, a light concentrator 708, and a detector 710.

[0047] As previously described, the emitter 702 can serve as the source of optical radiation transmitted towards the tissue measurement site 102. The emitter 702 can include one or more sources of optical radiation. Such sources of optical radiation can include LEDs, laser diodes, incandescent bulbs with appropriate frequency-selective filters, combinations of the same, or the like. In an embodiment, the emitter 702 includes sets of optical sources that are capable of emitting visible and near-infrared optical radiation. In some embodiments, the emitter 702 transmits optical radiation of red and infrared wavelengths, at approximately 650 nm and approximately 940 nm, respectively. In some embodiments, the emitter 702 includes a single source of optical radiation.

[0048] The light diffuser 704 receives the optical radiation emitted from the emitter 302 and homogenously spreads the optical radiation over a wide, donut-shaped area, such as the area outlined by the light diffuser 704 as depicted in FIG.

MASIMO 2056
Apple v. Masimo
IPR2024-00242

7B. Advantageously, the diffuser 704 can receive emitted light in the form of a 2D point optical source (or any other form) and spread the light to fit the desired surface area on a plane defined by the surface of the tissue measurement site 102. In an embodiment, the diffuser 704 is made of ground glass or glass beads. A skilled artisan will understand that may other materials can be used to make the light diffuser 704.

[0049] The light blocker 706 includes an annular ring having a cover portion 707 sized and shaped to form a light isolation chamber for the light concentrator 708 and the detector 710. (For purposes of illustration, the light block cover 707 is not illustrated in FIG. 7B.) The light blocker 706 and the cover 707 can be made of any material that optically isolates the light concentrator 708 and the detector 710. The light isolation chamber formed by the light blocker 706 and cover 708 ensures that the only light detected by the detector 710 is light that is reflected from the tissue measurement site.

[0050] The light concentrator 708 is a cylindrical structure with a truncated circular conical structure on top, the truncated section of which of which is adjacent the detector 710. The light concentrator 708 is structured to receive the emitted optical radiation, after reflection by the tissue measurement site 102, and to direct the reflected light to the detector 710. In an embodiment, the light concentrator 708 is made of ground glass or glass beads. In some embodiments, the light concentrator 708 includes a compound parabolic concentrator.

[0051] As previously described, the detector 710 captures and measures light from the tissue measurement site 102. For example, the detector 710 can capture and measure light transmitted from the emitter 702 that has been reflected from the tissue in the measurement site 102. The detector 710 can output a detector signal responsive to the light captured or measured. The detector 710 can be implemented using one or more photodiodes, phototransistors, or the like. In addition, a plurality of detectors 710 can be arranged in an array with a spatial configuration corresponding to the irradiated surface area depicted in FIG. 7B by the light concentrator 708 to capture the reflected light from the tissue measurement site.

MASIMO 2056
Apple v. Masimo
IPR2024-00242

[0052] Advantageously, the light path 720 illustrated in FIG. 7A depicts a substantial sample of reflected light that enter the light isolation chamber formed by the light blocker 706 and cover 707. As previously discussed, the large sample of reflected light (as compared to the reflected light collected using the 2D point optical source approach) provides the opportunity to take an average of the detected light, to derive a more accurate measurement of the emitted light absorbed by the tissue, which will lead to a more accurate oxygen saturation measurement.

[0053] Referring now to FIG. 7B, a top view of the 3D sensor 700 is illustrated with both the emitter 702 and the light blocker cover 707 removed for ease of illustration. The outer ring illustrates the footprint of the light diffuser 704. As light is emitted from the emitter 702 (not shown in FIG. 7B), it is diffused homogenously and directed to the tissue measurement site 102. The light blocker 706 forms the circular wall of a light isolation chamber to keep incident light from being sensed by the detector 710. The light blocker cover 707 blocks incidental light from entering the light isolation chamber from above. The light concentrator 710 collects the reflected light from the tissue measurement site 102 and funnels it upward toward the detector 710 at the center of the 3D sensor 700.

[0054] FIG. 8 illustrates an example of an optical physiological measurement system 800, which may also be referred to herein as a pulse oximetry system 800. In certain embodiments, the pulse oximetry system 800 noninvasively measures a blood analyte, such as oxygen, carboxyhemoglobin, methemoglobin, total hemoglobin, glucose, proteins, lipids, a percentage thereof (*e.g.,* saturation), pulse rate, perfusion index, oxygen content, total hemoglobin, Oxygen Reserve Index™ (ORI™) or many other physiologically relevant patient characteristics. These characteristics can relate to, for example, pulse rate, hydration, trending information and analysis, and the like. The system 800 can also measure additional blood analytes and/or other physiological parameters useful in determining a state or trend of wellness of a patient.

[0055] The pulse oximetry system 800 can measure analyte concentrations at least in part by detecting optical radiation attenuated by tissue at a

MASIMO 2056
Apple v. Masimo
IPR2024-00242

measurement site 102. The measurement site 102 can be any location on a patient's body, such as a finger, foot, earlobe, wrist, forehead, or the like.

[0056] The pulse oximetry system 800 can include a sensor 801 (or multiple sensors) that is coupled to a processing device or physiological monitor 809. In an embodiment, the sensor 801 and the monitor 809 are integrated together into a single unit. In another embodiment, the sensor 801 and the monitor 809 are separate from each other and communicate with one another in any suitable manner, such as via a wired or wireless connection. The sensor 801 and monitor 809 can be attachable and detachable from each other for the convenience of the user or caregiver, for ease of storage, sterility issues, or the like.

[0057] In the depicted embodiment shown in FIG. 8, the sensor 801 includes an emitter 804, a detector 806, and a front-end interface 808. The emitter 804 can serve as the source of optical radiation transmitted towards measurement site 102. The emitter 804 can include one or more sources of optical radiation, such as light emitting diodes (LEDs), laser diodes, incandescent bulbs with appropriate frequency-selective filters, combinations of the same, or the like. In an embodiment, the emitter 804 includes sets of optical sources that are capable of emitting visible and near-infrared optical radiation.

[0058] The pulse oximetry system 800 also includes a driver 811 that drives the emitter 804. The driver 111 can be a circuit or the like that is controlled by the monitor 809. For example, the driver 811 can provide pulses of current to the emitter 804. In an embodiment, the driver 811 drives the emitter 804 in a progressive fashion, such as in an alternating manner. The driver 811 can drive the emitter 804 with a series of pulses for some wavelengths that can penetrate tissue relatively well and for other wavelengths that tend to be significantly absorbed in tissue. A wide variety of other driving powers and driving methodologies can be used in various embodiments. The driver 811 can be synchronized with other parts of the sensor 801 to minimize or reduce jitter in the timing of pulses of optical radiation emitted from the emitter 804. In some embodiments, the driver 811 is capable of driving the emitter 804 to emit optical radiation in a pattern that varies by less than about 10 parts-per-million.

MASIMO 2056
Apple v. Masimo
IPR2024-00242

[0059] The detector 806 captures and measures light from the tissue measurement site 102. For example, the detector 806 can capture and measure light transmitted from the emitter 804 that has been attenuated or reflected from the tissue at the measurement site 102. The detector 806 can output a detector signal 107 responsive to the light captured and measured. The detector 806 can be implemented using one or more photodiodes, phototransistors, or the like. In some embodiments, a detector 806 is implemented in detector package to capture and measure light from the tissue measurement site 102 of the patient. The detector package can include a photodiode chip mounted to leads and enclosed in an encapsulant. In some embodiments, the dimensions of the detector package are approximately 2 square centimeters. In other embodiments, the dimensions of the detector package are approximately 1.5 centimeters in width and approximately 2 centimeters in length.

[0060] The front-end interface 808 provides an interface that adapts the output of the detectors 806, which is responsive to desired physiological parameters. For example, the front-end interface 808 can adapt the signal 807 received from the detector 806 into a form that can be processed by the monitor 809, for example, by a signal processor 810 in the monitor 809. The front-end interface 808 can have its components assembled in the sensor 801, in the monitor 809, in a connecting cabling (if used), in combinations of the same, or the like. The location of the front-end interface 808 can be chosen based on various factors including space desired for components, desired noise reductions or limits, desired heat reductions or limits, and the like.

[0061] The front-end interface 808 can be coupled to the detector 806 and to the signal processor 810 using a bus, wire, electrical or optical cable, flex circuit, or some other form of signal connection. The front-end interface 808 can also be at least partially integrated with various components, such as the detectors 806. For example, the front-end interface 808 can include one or more integrated circuits that are on the same circuit board as the detector 806. Other configurations can also be used.

MASIMO 2056
Apple v. Masimo
IPR2024-00242

[0062] As shown in FIG. 8, the monitor 909 can include the signal processor 810 and a user interface, such as a display 812. The monitor 809 can also include optional outputs alone or in combination with the display 812, such as a storage device 814 and a network interface 816. In an embodiment, the signal processor 810 includes processing logic that determines measurements for desired analytes based on the signals received from the detector 806. The signal processor 810 can be implemented using one or more microprocessors or sub-processors (*e.g.*, cores), digital signal processors, application specific integrated circuits (ASICs), field programmable gate arrays (FPGAs), combinations of the same, and the like.

[0063] The signal processor 810 can provide various signals that control the operation of the sensor 801. For example, the signal processor 810 can provide an emitter control signal to the driver 811. This control signal can be useful in order to synchronize, minimize, or reduce jitter in the timing of pulses emitted from the emitter 804. Accordingly, this control signal can be useful in order to cause optical radiation pulses emitted from the emitter 804 to follow a precise timing and consistent pattern. For example, when a transimpedance-based front-end interface 808 is used, the control signal from the signal processor 810 can provide synchronization with an analog-to-digital converter (ADC) in order to avoid aliasing, cross-talk, and the like. As also shown, an optional memory 813 can be included in the front-end interface 808 and/or in the signal processor 810. This memory 813 can serve as a buffer or storage location for the front-end interface 808 and/or the signal processor 810, among other uses.

[0064] The user interface 812 can provide an output, *e.g.*, on a display, for presentation to a user of the pulse oximetry system 800. The user interface 812 can be implemented as a touch-screen display, a liquid crystal display (LCD), an organic LED display, or the like. In alternative embodiments, the pulse oximetry system 800 can be provided without a user interface 812 and can simply provide an output signal to a separate display or system.

[0065] The storage device 814 and a network interface 816 represent other optional output connections that can be included in the monitor 809. The

MASIMO 2056
Apple v. Masimo
IPR2024-00242

storage device 814 can include any computer-readable medium, such as a memory device, hard disk storage, EEPROM, flash drive, or the like. The various software and/or firmware applications can be stored in the storage device 814, which can be executed by the signal processor 810 or another processor of the monitor 809. The network interface 816 can be a serial bus port (RS-232/RS-485), a Universal Serial Bus (USB) port, an Ethernet port, a wireless interface (*e.g.*, WiFi such as any 802.1x interface, including an internal wireless card), or other suitable communication device(s) that allows the monitor 809 to communicate and share data with other devices. The monitor 809 can also include various other components not shown, such as a microprocessor, graphics processor, or controller to output the user interface 812, to control data communications, to compute data trending, or to perform other operations.

[0066] Although not shown in the depicted embodiment, the pulse oximetry system 800 can include various other components or can be configured in different ways. For example, the sensor 801 can have both the emitter 804 and detector 806 on the same side of the tissue measurement site 102 and use reflectance to measure analytes.

[0067] Although the foregoing disclosure has been described in terms of certain preferred embodiments, many other variations than those described herein will be apparent to those of ordinary skill in the art.

[0068] Conditional language used herein, such as, among others, "can," "might," "may," "*e.g.*," and the like, unless specifically stated otherwise, or otherwise understood within the context as used, is generally intended to convey that certain embodiments include, while other embodiments do not include, certain features, elements and/or states. Thus, such conditional language is not generally intended to imply that features, elements and/or states are in any way required for one or more embodiments or that one or more embodiments necessarily include logic for deciding, with or without author input or prompting, whether these features, elements and/or states are included or are to be performed in any particular embodiment. The terms "comprising," "including," "having," and the like are synonymous and are used inclusively, in an open-ended fashion, and do not

MASIMO 2056
Apple v. Masimo
IPR2024-00242

exclude additional elements, features, acts, operations, and so forth. Also, the term "or" is used in its inclusive sense (and not in its exclusive sense) so that when used, for example, to connect a list of elements, the term "or" means one, some, or all of the elements in the list. Further, the term "each," as used herein, in addition to having its ordinary meaning, can mean any subset of a set of elements to which the term "each" is applied.

[0069] While the above detailed description has shown, described, and pointed out novel features as applied to various embodiments, it will be understood that various omissions, substitutions, and changes in the form and details of the systems, devices or algorithms illustrated can be made without departing from the spirit of the disclosure. As will be recognized, certain embodiments of the disclosure described herein can be embodied within a form that does not provide all of the features and benefits set forth herein, as some features can be used or practiced separately from others.

[0070] The term “and/or” herein has its broadest, least limiting meaning which is the disclosure includes A alone, B alone, both A and B together, or A or B alternatively, but does not require both A and B or require one of A or one of B. As used herein, the phrase “at least one of” A, B, “and” C should be construed to mean a logical A or B or C, using a non-exclusive logical or.

[0071] The apparatuses and methods described herein may be implemented by one or more computer programs executed by one or more processors. The computer programs include processor-executable instructions that are stored on a non-transitory tangible computer readable medium. The computer programs may also include stored data. Non-limiting examples of the non-transitory tangible computer readable medium are nonvolatile memory, magnetic storage, and optical storage. Although the foregoing disclosure has been described in terms of certain preferred embodiments, other embodiments will be apparent to those of ordinary skill in the art from the disclosure herein. Additionally, other combinations, omissions, substitutions and modifications will be apparent to the skilled artisan in view of the disclosure herein. Accordingly, the present invention is not intended to

MASIMO 2056
Apple v. Masimo
IPR2024-00242

be limited by the description of the preferred embodiments, but is to be defined by reference to claims.

[0072] Additionally, all publications, patents, and patent applications mentioned in this specification are herein incorporated by reference to the same extent as if each individual publication, patent, or patent application were specifically and individually indicated to be incorporated by reference.

MASIMO 2056
Apple v. Masimo
IPR2024-00242

WHAT IS CLAIMED IS:

1. An optical physiological measurement system comprising:

an emitter which emits light of a wavelength;

a diffuser which receives, spreads and emits the spread light, wherein the emitted spread light is directed at a tissue measurement site of a patient; and

a detector configured to detect the emitted light after attenuation by tissue of the patient, the detector further configured to transmit a signal responsive to the detected light.

MASIMO 2056
Apple v. Masimo
IPR2024-00242

ABSTRACT OF THE DISCLOSURE

A non-invasive, optical-based physiological monitoring system is disclosed. One embodiment includes an emitter configured to emit light. A diffuser is configured to receive and spread the emitted light, and to emit the spread light at a tissue measurement site. The system further includes a concentrator configured to receive the spread light after it has been attenuated by or reflected from the tissue measurement site. The concentrator is also configured to collect and concentrate the received light and to emit the concentrated light to a detector. The detector is configured to detect the concentrated light and to transmit a signal representative of the detected light. A processor is configured to receive the transmitted signal and to determine a physiological parameter, such as, for example, arterial oxygen saturation, in the tissue measurement site.

MASIMO 2056
Apple v. Masimo
IPR2024-00242

Under the Paperwork Reduction Act of 1995, no persons are required to respond to a collection of information unless it contains a valid OMB control number.

Application Data Sheet 37 CFR 1.76	Attorney Docket Number	MAS.1007C3
	Application Number	
Title of Invention	ADVANCED PULSE OXIMETRY SENSOR	

The application data sheet is part of the provisional or nonprovisional application for which it is being submitted. The following form contains the bibliographic data arranged in a format specified by the United States Patent and Trademark Office as outlined in 37 CFR 1.76.
This document may be completed electronically and submitted to the Office in electronic format using the Electronic Filing System (EFS) or the document may be printed and included in a paper filed application.

Secrecy Order 37 CFR 5.2:

☐ Portions or all of the application associated with this Application Data Sheet may fall under a Secrecy Order pursuant to 37 CFR 5.2 (Paper filers only. Applications that fall under Secrecy Order may not be filed electronically.)

Inventor Information:

Inventor 1 Remove

Legal Name

Prefix	Given Name	Middle Name	Family Name	Suffix
	Ammar		Al-Ali	

Residence Information (Select One) ● US Residency Non US Residency Active US Military Service

City	San Juan Capistrano	State/Province	CA	Country of Residence i	US

Mailing Address of Inventor:

Address 1	30312 Via Bella		
Address 2			
City	San Juan Capistrano	State/Province	CA
Postal Code	92675	Country i	US

All Inventors Must Be Listed - Additional Inventor Information blocks may be generated within this form by selecting the **Add** button. Add

Correspondence Information:

Enter either Customer Number or complete the Correspondence Information section below.
For further information see 37 CFR 1.33(a).

☐ **An Address is being provided for the correspondence Information of this application.**

Customer Number	64735		
Email Address	efiling@knobbe.com	Add Email	Remove Email

Application Information:

Title of the Invention	ADVANCED PULSE OXIMETRY SENSOR		
Attorney Docket Number	MAS.1007C3	Small Entity Status Claimed	☐
Application Type	Nonprovisional		
Subject Matter	Utility		
Total Number of Drawing Sheets (if any)	7	Suggested Figure for Publication (if any)	

Under the Paperwork Reduction Act of 1995, no persons are required to respond to a collection of information unless it contains a valid OMB control number.

Application Data Sheet 37 CFR 1.76	Attorney Docket Number	MAS.1007C3
	Application Number	
Title of Invention	ADVANCED PULSE OXIMETRY SENSOR	

Filing By Reference:

Only complete this section when filing an application by reference under 35 U.S.C. 111(c) and 37 CFR 1.57(a). Do not complete this section if application papers including a specification and any drawings are being filed. Any domestic benefit or foreign priority information must be provided in the appropriate section(s) below (i.e., "Domestic Benefit/National Stage Information" and "Foreign Priority Information").

For the purposes of a filing date under 37 CFR 1.53(b), the description and any drawings of the present application are replaced by this reference to the previously filed application, subject to conditions and requirements of 37 CFR 1.57(a).

Application number of the previously filed application	Filing date (YYYY-MM-DD)	Intellectual Property Authority or Country

Publication Information:

☐ Request Early Publication (Fee required at time of Request 37 CFR 1.219)

☐ **Request Not to Publish.** I hereby request that the attached application not be published under 35 U.S.C. 122(b) and certify that the invention disclosed in the attached application **has not and will not** be the subject of an application filed in another country, or under a multilateral international agreement, that requires publication at eighteen months after filing.

Representative Information:

Representative information should be provided for all practitioners having a power of attorney in the application. Providing this information in the Application Data Sheet does not constitute a power of attorney in the application (see 37 CFR 1.32).
Either enter Customer Number or complete the Representative Name section below. If both sections are completed the customer Number will be used for the Representative Information during processing.

Please Select One:	● Customer Number	US Patent Practitioner	○ Limited Recognition (37 CFR 11.9)
Customer Number	64735		

Domestic Benefit/National Stage Information:

This section allows for the applicant to either claim benefit under 35 U.S.C. 119(e), 120, 121, 365(c), or 386(c) or indicate National Stage entry from a PCT application. Providing benefit claim information in the Application Data Sheet constitutes the specific reference required by 35 U.S.C. 119(e) or 120, and 37 CFR 1.78.
When referring to the current application, please leave the "Application Number" field blank.

Prior Application Status	Pending		Remove
Application Number	Continuity Type	Prior Application Number	Filing or 371(c) Date (YYYY-MM-DD)
	Continuation of	16/226249	2018-12-19

Application Data Sheet 37 CFR 1.76	Attorney Docket Number	MAS.1007C3
	Application Number	
Title of Invention	ADVANCED PULSE OXIMETRY SENSOR	

Prior Application Status	Pending		Remove
Application Number	Continuity Type	Prior Application Number	Filing or 371(c) Date (YYYY-MM-DD)
16/226249	Continuation of	15/195199	2016-06-28
Prior Application Status	Expired		Remove
Application Number	Continuity Type	Prior Application Number	Filing or 371(c) Date (YYYY-MM-DD)
15/195199	Claims benefit of provisional	62/188430	2015-07-02
Additional Domestic Benefit/National Stage Data may be generated within this form by selecting the **Add** button.			Add

Foreign Priority Information:

This section allows for the applicant to claim priority to a foreign application. Providing this information in the application data sheet constitutes the claim for priority as required by 35 U.S.C. 119(b) and 37 CFR 1.55. When priority is claimed to a foreign application that is eligible for retrieval under the priority document exchange program (PDX)[i] the information will be used by the Office to automatically attempt retrieval pursuant to 37 CFR 1.55(i)(1) and (2). Under the PDX program, applicant bears the ultimate responsibility for ensuring that a copy of the foreign application is received by the Office from the participating foreign intellectual property office, or a certified copy of the foreign priority application is filed, within the time period specified in 37 CFR 1.55(g)(1).

			Remove
Application Number	Country[i]	Filing Date (YYYY-MM-DD)	Access Code[i] (if applicable)
Additional Foreign Priority Data may be generated within this form by selecting the **Add** button.			Add

Statement under 37 CFR 1.55 or 1.78 for AIA (First Inventor to File) Transition Applications

☐ This application (1) claims priority to or the benefit of an application filed before March 16, 2013 and (2) also contains, or contained at any time, a claim to a claimed invention that has an effective filing date on or after March 16, 2013.
NOTE: By providing this statement under 37 CFR 1.55 or 1.78, this application, with a filing date on or after March 16, 2013, will be examined under the first inventor to file provisions of the AIA.

Application Data Sheet 37 CFR 1.76	Attorney Docket Number	MAS.1007C3
	Application Number	
Title of Invention	ADVANCED PULSE OXIMETRY SENSOR	

Authorization or Opt-Out of Authorization to Permit Access:

When this Application Data Sheet is properly signed and filed with the application, applicant has provided written authority to permit a participating foreign intellectual property (IP) office access to the instant application-as-filed (see paragraph A in subsection 1 below) and the European Patent Office (EPO) access to any search results from the instant application (see paragraph B in subsection 1 below).

Should applicant choose not to provide an authorization identified in subsection 1 below, applicant **must opt-out** of the authorization by checking the corresponding box A or B or both in subsection 2 below.

NOTE: This section of the Application Data Sheet is **ONLY** reviewed and processed with the **INITIAL** filing of an application. After the initial filing of an application, an Application Data Sheet cannot be used to provide or rescind authorization for access by a foreign IP office(s). Instead, Form PTO/SB/39 or PTO/SB/69 must be used as appropriate.

1. Authorization to Permit Access by a Foreign Intellectual Property Office(s)

A. Priority Document Exchange (PDX) - Unless box A in subsection 2 (opt-out of authorization) is checked, the undersigned hereby **grants the USPTO authority** to provide the European Patent Office (EPO), the Japan Patent Office (JPO), the Korean Intellectual Property Office (KIPO), the State Intellectual Property Office of the People's Republic of China (SIPO), the World Intellectual Property Organization (WIPO), and any other foreign intellectual property office participating with the USPTO in a bilateral or multilateral priority document exchange agreement in which a foreign application claiming priority to the instant patent application is filed, access to: (1) the instant patent application-as-filed and its related bibliographic data, (2) any foreign or domestic application to which priority or benefit is claimed by the instant application and its related bibliographic data, and (3) the date of filing of this Authorization. See 37 CFR 1.14(h)(1).

B. Search Results from U.S. Application to EPO - Unless box B in subsection 2 (opt-out of authorization) is checked, the undersigned hereby **grants the USPTO authority** to provide the EPO access to the bibliographic data and search results from the instant patent application when a European patent application claiming priority to the instant patent application is filed. See 37 CFR 1.14(h)(2).

The applicant is reminded that the EPO's Rule 141(1) EPC (European Patent Convention) requires applicants to submit a copy of search results from the instant application without delay in a European patent application that claims priority to the instant application.

2. Opt-Out of Authorizations to Permit Access by a Foreign Intellectual Property Office(s)

☐ A. Applicant **DOES NOT** authorize the USPTO to permit a participating foreign IP office access to the instant application-as-filed. If this box is checked, the USPTO will not be providing a participating foreign IP office with any documents and information identified in subsection 1A above.

☐ B. Applicant **DOES NOT** authorize the USPTO to transmit to the EPO any search results from the instant patent application. If this box is checked, the USPTO will not be providing the EPO with search results from the instant application.

NOTE: Once the application has published or is otherwise publicly available, the USPTO may provide access to the application in accordance with 37 CFR 1.14.

Application Data Sheet 37 CFR 1.76	Attorney Docket Number	MAS.1007C3
	Application Number	
Title of Invention	ADVANCED PULSE OXIMETRY SENSOR	

Applicant Information:

Providing assignment information in this section does not substitute for compliance with any requirement of part 3 of Title 37 of CFR to have an assignment recorded by the Office.

Applicant 1 Remove

If the applicant is the inventor (or the remaining joint inventor or inventors under 37 CFR 1.45), this section should not be completed. The information to be provided in this section is the name and address of the legal representative who is the applicant under 37 CFR 1.43; or the name and address of the assignee, person to whom the inventor is under an obligation to assign the invention, or person who otherwise shows sufficient proprietary interest in the matter who is the applicant under 37 CFR 1.46. If the applicant is an applicant under 37 CFR 1.46 (assignee, person to whom the inventor is obligated to assign, or person who otherwise shows sufficient proprietary interest) together with one or more joint inventors, then the joint inventor or inventors who are also the applicant should be identified in this section.

Clear

● Assignee	Legal Representative under 35 U.S.C. 117	Joint Inventor
Person to whom the inventor is obligated to assign.	Person who shows sufficient proprietary interest	

If applicant is the legal representative, indicate the authority to file the patent application, the inventor is:

Name of the Deceased or Legally Incapacitated Inventor:

If the Applicant is an Organization check here. ☒

Organization Name	MASIMO CORPORATION		
Mailing Address Information For Applicant:			
Address 1	52 Discovery		
Address 2			
City	Irvine	**State/Province**	CA
Country	US	Postal Code	92618
Phone Number		Fax Number	
Email Address			

Additional Applicant Data may be generated within this form by selecting the Add button. Add

Assignee Information including Non-Applicant Assignee Information:

Providing assignment information in this section does not substitute for compliance with any requirement of part 3 of Title 37 of CFR to have an assignment recorded by the Office.

Application Data Sheet 37 CFR 1.76	Attorney Docket Number	MAS.1007C3
	Application Number	
Title of Invention	ADVANCED PULSE OXIMETRY SENSOR	

Assignee 1

Complete this section if assignee information, including non-applicant assignee information, is desired to be included on the patent application publication. An assignee-applicant identified in the "Applicant Information" section will appear on the patent application publication as an applicant. For an assignee-applicant, complete this section only if identification as an assignee is also desired on the patent application publication.

Remove

If the Assignee or Non-Applicant Assignee is an Organization check here. ☐

Prefix	**Given Name**	Middle Name	**Family Name**	Suffix

Mailing Address Information For Assignee including Non-Applicant Assignee:

Address 1			
Address 2			
City		**State/Province**	
Country i		Postal Code	
Phone Number		Fax Number	
Email Address			

Additional Assignee or Non-Applicant Assignee Data may be generated within this form by selecting the Add button. Add

Signature:

Remove

NOTE: This Application Data Sheet must be signed in accordance with 37 CFR 1.33(b). **However, if this Application Data Sheet is submitted with the INITIAL filing of the application and either box A or B is not checked in subsection 2 of the "Authorization or Opt-Out of Authorization to Permit Access" section, then this form must also be signed in accordance with 37 CFR 1.14(c).**

This Application Data Sheet **must** be signed by a patent practitioner if one or more of the applicants is a **juristic entity** (e.g., corporation or association). If the applicant is two or more joint inventors, this form must be signed by a patent practitioner, **all** joint inventors who are the applicant, or one or more joint inventor-applicants who have been given power of attorney (e.g., see USPTO Form PTO/AIA/81) on behalf of **all** joint inventor-applicants.

See 37 CFR 1.4(d) for the manner of making signatures and certifications.

Signature	/Aaron S. Johnson/			Date (YYYY-MM-DD)	2019-08-05
First Name	Aaron	Last Name	Johnson	Registration Number	74164

Additional Signature may be generated within this form by selecting the Add button. Add

Application Data Sheet 37 CFR 1.76	Attorney Docket Number	MAS.1007C3
	Application Number	
Title of Invention	ADVANCED PULSE OXIMETRY SENSOR	

This collection of information is required by 37 CFR 1.76. The information is required to obtain or retain a benefit by the public which is to file (and by the USPTO to process) an application. Confidentiality is governed by 35 U.S.C. 122 and 37 CFR 1.14. This collection is estimated to take 23 minutes to complete, including gathering, preparing, and submitting the completed application data sheet form to the USPTO. Time will vary depending upon the individual case. Any comments on the amount of time you require to complete this form and/or suggestions for reducing this burden, should be sent to the Chief Information Officer, U.S. Patent and Trademark Office, U.S. Department of Commerce, P.O. Box 1450, Alexandria, VA 22313-1450. DO NOT SEND FEES OR COMPLETED FORMS TO THIS ADDRESS. **SEND TO: Commissioner for Patents, P.O. Box 1450, Alexandria, VA 22313-1450.**

Privacy Act Statement

The Privacy Act of 1974 (P.L. 93-579) requires that you be given certain information in connection with your submission of the attached form related to a patent application or patent. Accordingly, pursuant to the requirements of the Act, please be advised that: (1) the general authority for the collection of this information is 35 U.S.C. 2(b)(2); (2) furnishing of the information solicited is voluntary; and (3) the principal purpose for which the information is used by the U.S. Patent and Trademark Office is to process and/or examine your submission related to a patent application or patent. If you do not furnish the requested information, the U.S. Patent and Trademark Office may not be able to process and/or examine your submission, which may result in termination of proceedings or abandonment of the application or expiration of the patent.

The information provided by you in this form will be subject to the following routine uses:

1 The information on this form will be treated confidentially to the extent allowed under the Freedom of Information Act (5 U.S.C. 552) and the Privacy Act (5 U.S.C. 552a). Records from this system of records may be disclosed to the Department of Justice to determine whether the Freedom of Information Act requires disclosure of these records.

2. A record from this system of records may be disclosed, as a routine use, in the course of presenting evidence to a court, magistrate, or administrative tribunal, including disclosures to opposing counsel in the course of settlement negotiations.

3 A record in this system of records may be disclosed, as a routine use, to a Member of Congress submitting a request involving an individual, to whom the record pertains, when the individual has requested assistance from the Member with respect to the subject matter of the record.

4. A record in this system of records may be disclosed, as a routine use, to a contractor of the Agency having need for the information in order to perform a contract. Recipients of information shall be required to comply with the requirements of the Privacy Act of 1974, as amended, pursuant to 5 U.S.C. 552a(m).

5. A record related to an International Application filed under the Patent Cooperation Treaty in this system of records may be disclosed, as a routine use, to the International Bureau of the World Intellectual Property Organization, pursuant to the Patent CooperationTreaty.

6. A record in this system of records may be disclosed, as a routine use, to another federal agency for purposes of National Security review (35 U.S.C. 181) and for review pursuant to the Atomic Energy Act (42 U.S.C. 218(c)).

7. A record from this system of records may be disclosed, as a routine use, to the Administrator, General Services, or his/her designee, during an inspection of records conducted by GSA as part of that agency's responsibility to recommend improvements in records management practices and programs, under authority of 44 U.S.C. 2904 and 2906. Such disclosure shall be made in accordance with the GSA regulations governing inspection of records for this purpose, and any other relevant (i.e., GSA or Commerce) directive. Such disclosure shall not be used to make determinations about individuals.

8. A record from this system of records may be disclosed, as a routine use, to the public after either publication of the application pursuant to 35 U.S.C. 122(b) or issuance of a patent pursuant to 35 U.S.C. 151. Further, a record may be disclosed, subject to the limitations of 37 CFR 1.14, as a routine use, to the public if the record was filed in an application which became abandoned or in which the proceedings were terminated and which application is referenced by either a published application, an application open to public inspections or an issued patent.

9. A record from this system of records may be disclosed, as a routine use, to a Federal, State, or local law enforcement agency, if the USPTO becomes aware of a violation or potential violation of law or regulation.

IN THE UNITED STATES PATENT AND TRADEMARK OFFICE

Inventor	:	Ammar Al-Ali
App. No.	:	16/532065
Filed	:	August 5, 2019
For	:	ADVANCED PULSE OXIMETRY SENSOR
Examiner	:	Unassigned
Art Unit	:	3791
Conf. No.	:	1092

PRELIMINARY AMENDMENT

Mail Stop Amendment
Commissioner for Patents
P.O. Box 1450
Alexandria, VA 22313-1450

Dear Commissioner:

Prior to examination of the above-identified application, please enter the amendments set forth herein.

Amendments to the Specification begin on page 2 of this paper.

Amendments to the Claims are reflected in the listing of claims which begins on page 4 of this paper.

Amendments to the Drawings begin on page 9. A "Replacement Sheet" for each sheet of drawings being amended can be found in the Appendix.

Remarks begin on page 10 of this paper.

MASIMO 2056
Apple v. Masimo
IPR2024-00242

AMENDMENTS TO THE SPECIFICATION

Please amend the originally filed specification as set forth below.

Please amend the Title as follows:

~~ADVANCED PULSE OXIMETRY SENSOR~~PHYSIOLOGICAL MONITORING DEVICES, SYSTEMS, AND METHODS

Please amend Paragraph [0020] as follows:

[0020] FIG. 1 illustrates a conventional approach to [[2D]]two-dimensional pulse oximetry in which the emitter is configured to emit optical radiation as a point optical source.

Please amend Paragraph [0021] as follows:

[0021] FIG. 2 illustrates the disclosed [[3D]]three-dimensional approach to pulse oximetry in which the emitted light irradiates a substantially larger volume of tissue as compared to the point source approach described with respect to ~~FIG. 2A~~FIG. 1.

Please amend Paragraph [0022] as follows:

[0022] FIG. 3 illustrates schematically a side view of a [[3D]]three-dimensional pulse oximetry sensor according to an embodiment of the present disclosure.

Please amend Paragraph [0023] as follows:

[0023] FIG. 4A is a top view of a portion of a [[3D]]three-dimensional pulse oximetry sensor according to an embodiment of the present disclosure.

Please amend Paragraph [0024] as follows:

[0024] FIG. 4B illustrates the top view of a portion of the [[3D]]three-dimensional pulse oximetry sensor shown in FIG. 4A, with the addition of a tissue measurement site in operational position.

Please amend Paragraph [0025] as follows:

[0025] FIG. 5 illustrates a top view of a [[3D]]three-dimensional pulse oximetry sensor according to an embodiment of the present disclosure.

Please amend Paragraph [0026] as follows:

[0026] FIG. 6 illustrates a conventional [[2D]]two-dimensional approach to reflective pulse oximetry in which the emitter is configured to emit optical radiation as a point optical source.

Please amend Paragraph [0027] as follows:

[0027] FIG. 7A is a simplified schematic side view illustration of a reflective [[3D]]three-dimensional pulse oximetry sensor according to an embodiment of the present disclosure.

Please amend Paragraph [0028] as follows:

[0028] FIG. 7B is a simplified schematic top view illustration of the [[3D]]three-dimensional reflective pulse oximetry sensor of FIG. 7A.

Please amend Paragraph [0053] as follows:

[0053] Referring now to FIG. 7B, a top view of the 3D sensor 700 is illustrated with both the emitter 702 and the light blocker cover 707 removed for ease of illustration. The outer ring illustrates the footprint of the light diffuser 704. As light is emitted from the emitter 702 (not shown in FIG. 7B), it is diffused homogenously and directed to the tissue measurement site 102. The light blocker 706 forms the circular wall of a light isolation chamber to keep incident light from being sensed by the detector 710. The light blocker cover 707 blocks incidental light from entering the light isolation chamber from above. The light concentrator ~~710~~708 collects the reflected light from the tissue measurement site 102 and funnels it upward toward the detector 710 at the center of the 3D sensor 700.

MASIMO 2056
Apple v. Masimo
IPR2024-00242

AMENDMENTS TO THE CLAIMS

A complete listing of all claims is presented below with insertions underlined (e.g., insertion), and deletions struck through or in double brackets (e.g., ~~deletion~~ or [[deletion]]).

1. **(Cancelled)**
2. **(New)** A physiological monitoring device comprising:

a plurality of emitters, wherein each of the plurality of emitters is configured to emit light proximate a wrist of a user;

a material positioned between the plurality of emitters and the tissue measurement site, the material configured to alter a shape of the light emitted from one or more of the plurality of emitters before the light reaches the tissue measurement site;

a plurality of detectors configured to detect the light after attenuation by tissue, the plurality of detectors further configured to output at least one signal responsive to the detected light;

a surface comprising a dark-colored coating, the surface positioned between the plurality of detectors and the tissue, the dark-colored coating comprising an opening configured to allow at least a portion of light reflected from the tissue to pass through the surface;

a light block between the plurality of emitters and the plurality of detectors and configured to prevent at least a portion of the light emitted from the plurality of emitters from reaching the plurality of detectors without first reaching the tissue; and

a processor configured to receive and process one or more signals responsive to the at least one outputted signal and determine a physiological parameter of the user responsive to the one or more signals.

3. **(New)** The physiological monitoring device of Claim 2, wherein the material is configured to change an output intensity profile of the light.

4. **(New)** The physiological monitoring device of Claim 2, further comprising a display configured to present visual feedback responsive to the determined physiological parameter.

5. **(New)** The physiological monitoring device of Claim 4, wherein the display is a touch-screen display.

6. **(New)** The physiological monitoring device of Claim 2, wherein the plurality of emitters and the plurality of detectors are arranged in a reflectance measurement configuration.

7. **(New)** The physiological monitoring device of Claim 2, wherein the light block comprises an at least partially circular shape, and wherein the plurality of emitters are positioned outside the light block and the plurality of detectors are positioned inside the light block.

8. **(New)** The physiological monitoring device of Claim 2, wherein the physiological parameter comprises pulse rate.

9. **(New)** The physiological monitoring device of Claim 2, wherein the material comprises plastic.

10. **(New)** The physiological monitoring device of Claim 2, wherein the material comprises glass.

11. **(New)** The physiological monitoring device of Claim 2, wherein the material is configured to disperse the light emitted from the one or more of the plurality of emitters before the light reaches the tissue measurement site.

12. **(New)** The physiological monitoring device of Claim 2, wherein an amount of light transmitted by the material to the tissue measurement site is greater than 90% of the light emitted by the plurality of emitters.

13. **(New)** The physiological monitoring device of Claim 2, wherein the light emitted from the one or more of the plurality of emitters comprises a Gausian intensity profile after interaction with the material.

14. **(New)** The physiological monitoring device of Claim 2, wherein the altered shape of the light after interaction with the material comprises a circular geometry.

15. **(New)** The physiological monitoring device of Claim 2, wherein the opening in the dark-colored coating comprises a width and a length, and wherein the width is larger than the length.

16. **(New)** The physiological monitoring device of Claim 2, wherein the dark-colored coating comprises black.

17. **(New)** A method of measuring a physiological parameter, the method comprising:

emitting, from a plurality of emitters, light proximate a wrist of a user;

MASIMO 2056
Apple v. Masimo
IPR2024-00242

shaping at least a portion of the light emitted from the plurality of emitters before the light reaches the tissue measurement site;

permitting light reflected from tissue of the user to pass through an opening in a dark-colored coating on a surface and detecting, with a detector, at least a portion of the reflected light passing through the opening, wherein the surface is positioned between the detector and the tissue;

preventing at least a portion of the light emitted from the plurality of emitters from reaching the plurality of detectors without first reaching the tissue with a light block positioned between the plurality of emitters and the detector;

outputting, from the detector, at least one signal responsive to the detected light; and

electronically processing one or more signals responsive to the outputted at least one signal to determine a physiological parameter.

18. **(New)** The method of Claim 17, wherein the light block comprises an at least partially circular shape, and wherein the plurality of emitters are positioned outside the light block and the of detector is positioned inside the light block.

19. **(New)** The method of Claim 17, further comprising presenting, with a display, visual feedback responsive to the determined physiological parameter.

20. **(New)** The method of Claim 17, wherein the dark-colored coating comprises black.

21. **(New)** The method of Claim 17, wherein the step of shaping the at least the portion of the light emitted from the plurality of emitters is performed with a material comprising at least one of glass or plastic.

22. **(New)** The method of Claim 17, wherein the step of shaping the at least the portion of the light emitted from the plurality of emitters comprises spreading the at least the portion of the light before the light reaches the tissue measurement site.

23. **(New)** The method of Claim 17, wherein the opening in the dark-colored coating comprises a width and a length, and wherein the width is larger than the length.

24. **(New)** A physiological monitoring device comprising:

a plurality of optical sources configured to emit light proximate a wrist of a user;

a material positioned between the plurality of optical sources and a tissue measurement site, wherein the material is configured to shape at least a portion of the light emitted from one or more of the plurality of emitters before the light reaches the tissue measurement site;

a plurality of detectors configured to detect the light after attenuation by tissue, the plurality of detectors further configured to output at least one signal responsive to the detected light, wherein the plurality of optical sources and the plurality of detectors are arranged in a reflectance measurement configuration;

a surface comprising a dark-colored coating, the surface positioned between the plurality of detectors and the tissue, the dark-colored coating comprising an opening configured to allow at least a portion of light reflected from the tissue to pass through the surface;

a light block between the plurality of optical sources and the plurality of detectors and configured to prevent at least a portion of light emitted from the plurality of optical sources from reaching the plurality of detectors without first reaching the tissue;

a processor configured to receive and process one or more signals responsive to the at least one outputted signal and determine a physiological parameter of the user responsive to the one or more signals; and

a touch-screen display configured to present visual feedback responsive to the determined physiological parameter;

wherein the physiological monitoring device is configured to wirelessly transmit physiological parameter data to a separate device.

25. **(New)** The physiological monitoring device of Claim 24, wherein the opening in the dark-colored coating comprises a width and a length, and wherein the width is larger than the length.

26. **(New)** The physiological monitoring device of Claim 24, wherein the material comprises at least one of glass or plastic.

27. **(New)** A system configured to measure one or more physiological parameters of a user, the system comprising:

a physiological monitoring device comprising:

a plurality of emitters configured to emit light proximate a wrist of a user;

a material positioned between the plurality of emitters and a tissue measurement site, the material configured to alter a shape of the light emitted from one or more of the plurality of emitters before the light reaches the tissue measurement site;

a plurality of detectors configured to detect the light after attenuation by tissue, the plurality of detectors further configured to output at least one signal responsive to the detected light;

a surface comprising a dark-colored coating, the surface positioned between the plurality of detectors and the tissue, the dark-colored coating comprising an opening configured to allow at least a portion of light reflected from the tissue to pass through the surface;

a light block between the plurality of emitters and the plurality of detectors and configured to prevent at least a portion of light from the plurality of emitters from reaching the plurality of detectors without first reaching the tissue; and

a processor configured to receive and process one or more signals responsive to the outputted at least one signal and determine a physiological parameter of the user responsive to the one or more signals; and

a processing device configured to wirelessly receive physiological parameter data from the physiological monitoring device, wherein the processing device comprises a user interface, a storage device, and a network interface configured to wirelessly communicate with the physiological monitoring device, and wherein the user interface includes a touch-screen display configured to present visual feedback responsive to the physiological parameter data.

28. **(New)** The system of Claim 27, wherein the system is configured to determine a state of wellness of the user based on the determined physiological parameter.

29. **(New)** The system of Claim 27, wherein the system is configured to determine a trend of wellness of the user based on the determined physiological parameter.

30. **(New)** The system of Claim 27, wherein the visual feedback presented by the touch-screen display is responsive to a pulse rate of the user.

31. **(New)** The system of Claim 27, wherein the material comprises at least one of glass or plastic.

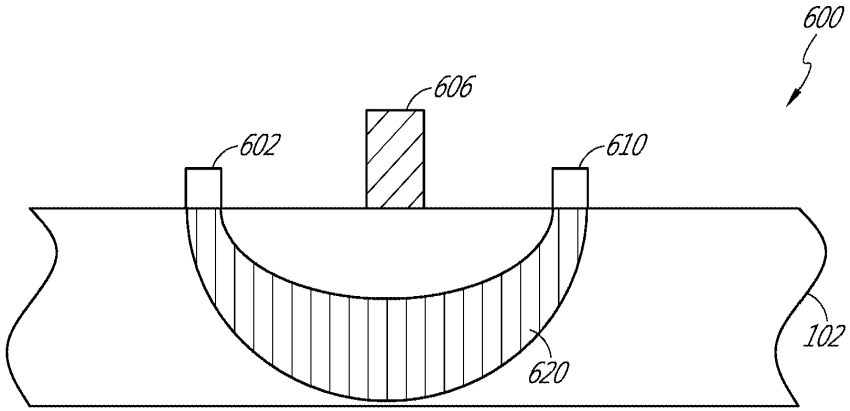

FIG. 6
(PRIOR ART)

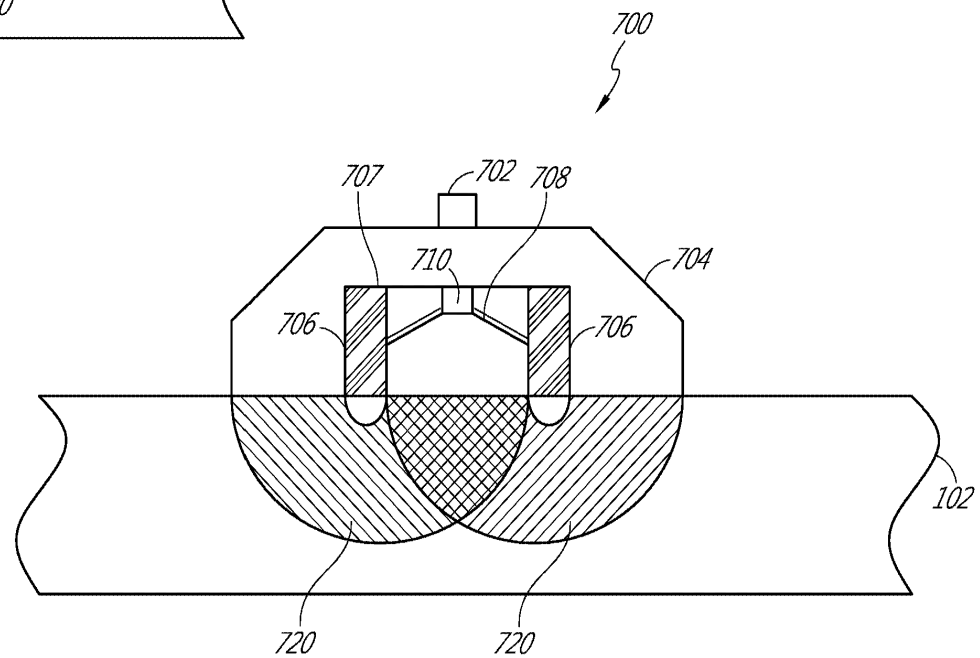

FIG. 7A

MASIMO 2056
Apple v. Masimo
IPR2024-00242

INFORMATION DISCLOSURE STATEMENT

First Inventor	:	Ammar Al-Ali
App. No.	:	16/532065
Filed	:	August 5, 2019
For	:	ADVANCED PULSE OXIMETRY SENSOR
Examiner	:	Unassigned
Art Unit	:	3791
Conf. No.	:	1092

Commissioner for Patents
P.O. Box 1450
Alexandria, VA 22313-1450

References and Listing

Pursuant to 37 CFR 1.56, an Information Disclosure Statement listing references is provided herewith. Listed references are of record in U.S. patent application No. 16/226249, filed December 19, 2018, which is the parent of this Utility application, and is relied upon for an earlier filing date under 35 USC 120. Copies of the references are not submitted pursuant to 37 CFR 1.98(d).

No Disclaimers

To the extent that anything in the Information Disclosure Statement or the listed references could be construed as a disclaimer of any subject matter supported by the present application, Applicant hereby rescinds and retracts such disclaimer.

Timing of Disclosure

This Information Disclosure Statement is being filed within three months of the filing date or date of national phase entry, with an RCE or before receipt of a First Office Action after an RCE, and no fee is believed to be required.

The Commissioner is hereby authorized to charge any additional fees which may be required, or credit any overpayment, to Account No. 11-1410.

Respectfully submitted,

KNOBBE, MARTENS, OLSON & BEAR, LLP

Dated: September 16, 2019

By: /Aaron S. Johnson/
Aaron S. Johnson
Registration No. 74,164
Registered Practitioner
Customer No. 64735
(949) 760-0404

31080251

MASIMO 2056
Apple v. Masimo
IPR2024-00242

Please Direct All Correspondence to Customer Number 64735

RESCISSION OF ANY PRIOR DISCLAIMERS AND REQUEST TO REVISIT ART

Inventor	:	Ammar Al-Ali
App. No.	:	16/532065
Filed	:	August 5, 2019
For	:	ADVANCED PULSE OXIMETRY SENSOR
Examiner	:	Unassigned
Art Unit	:	3791
Conf. No.	:	1092

Commissioner for Patents
P.O. Box 1450
Alexandria, VA 22313-1450

Dear Commissioner:

The claims of the present application are different and possibly broader in scope than the claims pursued in the parent application(s). To the extent any prior amendments or characterizations of the scope of any claim or referenced art could be construed as a disclaimer of any subject matter supported by the present disclosure, Applicant hereby rescinds and retracts such disclaimer. Accordingly, the references previously considered in the parent application(s) may need to be re-visited.

Please charge any additional fees, including any fees for additional extension of time, or credit overpayment to Deposit Account No. 11-1410.

Knobbe, Martens, Olson & Bear, LLP

Respectfully submitted,

Dated: September 16, 2019

/Aaron S. Johnson/
Aaron S. Johnson
Registration No. 74,164
Registered Practitioner
Customer No. 64735
(949) 760-0404

MASIMO 2056
Apple v. Masimo
IPR2024-00242

Electronic Patent Application Fee Transmittal

Application Number:	16532065
Filing Date:	05-Aug-2019
Title of Invention:	ADVANCED PULSE OXIMETRY SENSOR
First Named Inventor/Applicant Name:	Ammar Al-Ali
Filer:	Aaron Samuel Johnson/Daniel Escajeda
Attorney Docket Number:	MAS.1007C3

Filed as Large Entity

Filing Fees for Utility under 35 USC 111(a)

Description	Fee Code	Quantity	Amount	Sub-Total in USD($)
Basic Filing:				
Pages:				
Claims:				
CLAIMS IN EXCESS OF 20	1202	10	100	1000
INDEPENDENT CLAIMS IN EXCESS OF 3	1201	1	460	460
Miscellaneous-Filing:				
Petition:				
Patent-Appeals-and-Interference:				

MASIMO 2056
Apple v. Masimo
IPR2024-00242

Description	Fee Code	Quantity	Amount	Sub-Total in USD($)
Post-Allowance-and-Post-Issuance:				
Extension-of-Time:				
Miscellaneous:				
		Total in USD ($)		**1460**

MASIMO 2056
Apple v. Masimo
IPR2024-00242

Electronic Acknowledgement Receipt	
EFS ID:	37172122
Application Number:	16532065
International Application Number:	
Confirmation Number:	1092
Title of Invention:	ADVANCED PULSE OXIMETRY SENSOR
First Named Inventor/Applicant Name:	Ammar Al-Ali
Customer Number:	64735
Filer:	Aaron Samuel Johnson/Wendi Manzanares
Filer Authorized By:	Aaron Samuel Johnson
Attorney Docket Number:	MAS.1007C3
Receipt Date:	16-SEP-2019
Filing Date:	05-AUG-2019
Time Stamp:	17:28:06
Application Type:	Utility under 35 USC 111(a)

Payment information:

Submitted with Payment	yes
Payment Type	CARD
Payment was successfully received in RAM	$1460
RAM confirmation Number	E20199FH28240654
Deposit Account	111410
Authorized User	Wendi Manzanares
The Director of the USPTO is hereby authorized to charge indicated fees and credit any overpayment as follows: 37 CFR 1.16 (National application filing, search, and examination fees) 37 CFR 1.17 (Patent application and reexamination processing fees)	

MASIMO 2056
Apple v. Masimo
IPR2024-00242

File Listing:

Document Number	Document Description	File Name	File Size(Bytes)/ Message Digest	Multi Part /.zip	Pages (if appl.)
1		PA_MAS1007C3.pdf	53529 9b9940557850501ae696ea29327d0b2a501973bf	yes	10
	Multipart Description/PDF files in .zip description				
	Document Description		**Start**	**End**	
	Preliminary Amendment		1	1	
	Specification		2	3	
	Claims		4	8	
	Drawings-only black and white line drawings		9	9	
	Applicant Arguments/Remarks Made in an Amendment		10	10	
Warnings:					
Information:					
2	Drawings-only black and white line drawings	Replacement_Drawing_MAS1007.PDF	62554 c4dc3a082ace834b17f69214b4b5672203d73b0a	no	1
Warnings:					
Information:					
3		IDS_MAS1007C3.pdf	387540 019d28ebba2e1bdfba73dd9cc23fbc05853d87a8	yes	41
	Multipart Description/PDF files in .zip description				
	Document Description		**Start**	**End**	
	Transmittal Letter		1	1	
	Information Disclosure Statement (IDS) Form (SB08)		2	41	
Warnings:					

MASIMO 2056
Apple v. Masimo
IPR2024-00242

Information:					
4	Miscellaneous Incoming Letter	REQUEST_MAS1007C3.pdf	14404 9bc2f2dc0963319e4d2679985c753e4bcfbc6ab2	no	1
Warnings:					
Information:					
5	Fee Worksheet (SB06)	fee-info.pdf	31914 71aa8bc7830e8ed492d428074ba4103a6a753d91	no	2
Warnings:					
Information:					
			Total Files Size (in bytes):	549941	

This Acknowledgement Receipt evidences receipt on the noted date by the USPTO of the indicated documents, characterized by the applicant, and including page counts, where applicable. It serves as evidence of receipt similar to a Post Card, as described in MPEP 503.

<u>New Applications Under 35 U.S.C. 111</u>
If a new application is being filed and the application includes the necessary components for a filing date (see 37 CFR 1.53(b)-(d) and MPEP 506), a Filing Receipt (37 CFR 1.54) will be issued in due course and the date shown on this Acknowledgement Receipt will establish the filing date of the application.
<u>National Stage of an International Application under 35 U.S.C. 371</u>
If a timely submission to enter the national stage of an international application is compliant with the conditions of 35 U.S.C. 371 and other applicable requirements a Form PCT/DO/EO/903 indicating acceptance of the application as a national stage submission under 35 U.S.C. 371 will be issued in addition to the Filing Receipt, in due course.
<u>New International Application Filed with the USPTO as a Receiving Office</u>
If a new international application is being filed and the international application includes the necessary components for an international filing date (see PCT Article 11 and MPEP 1810), a Notification of the International Application Number and of the International Filing Date (Form PCT/RO/105) will be issued in due course, subject to prescriptions concerning national security, and the date shown on this Acknowledgement Receipt will establish the international filing date of the application.

MASIMO 2056
Apple v. Masimo
IPR2024-00242

AMENDMENTS TO THE DRAWINGS

Please replace Figure 7A with the enclosed *Replacement Sheet*.

REMARKS

Prior to examination, please amend the Specification and Claims as shown herein. Accompanying this Amendment is both a marked up and clean version of the specification.

No Disclaimers or Disavowals

Although the present communication may include alterations to the application or claims, or characterizations of claim scope or referenced art, Applicant is not conceding in this application that previously pending claims are not patentable. Rather, any alterations or characterizations are being made to facilitate expeditious prosecution of this application. Applicant reserves the right to pursue at a later date any previously pending or other broader or narrower claims that capture any subject matter supported by the present disclosure, including subject matter found to be specifically disclaimed herein or by any prior prosecution. Accordingly, reviewers of this or any parent, child or related prosecution history shall not reasonably infer that Applicant has made any disclaimers or disavowals of any subject matter supported by the present application.

Please charge any additional fees, including any fees for additional extension of time, or credit overpayment to Deposit Account No. 11-1410.

Respectfully submitted,

KNOBBE, MARTENS, OLSON & BEAR, LLP

Dated: September 16, 2019

By: /Aaron S. Johnson/
Aaron S. Johnson
Registration No. 74,164
Registered Practitioner
Customer No. 64735
(949) 760-0404

29558484

MASIMO 2056
Apple v. Masimo
IPR2024-00242

PTO/SB/06 (09-11)
Approved for use through 1/31/2014. OMB 0651-0032
U.S. Patent and Trademark Office; U.S. DEPARTMENT OF COMMERCE
Under the Paperwork Reduction Act of 1995, no persons are required to respond to a collection of information unless it displays a valid OMB control number.

PATENT APPLICATION FEE DETERMINATION RECORD Substitute for Form PTO-875	Application or Docket Number 16/532,065	Filing Date 08/05/2019	☐ To be Mailed

ENTITY: ☑ LARGE ☐ SMALL ☐ MICRO

APPLICATION AS FILED - PART I

FOR	(Column 1) NUMBER FILED	(Column 2) NUMBER EXTRA		RATE ($)	FEE ($)
☐ BASIC FEE (37 CFR 1.16(a), (b), or (c))	N/A	N/A		N/A	
☐ SEARCH FEE (37 CFR 1.16(k), (i), or (m))	N/A	N/A		N/A	
☐ EXAMINATION FEE (37 CFR 1.16(o), (p), or (q))	N/A	N/A		N/A	
TOTAL CLAIMS (37 CFR 1.16(i))	minus 20 =	*		x $100 =	
INDEPENDENT CLAIMS (37 CFR 1.16(h))	minus 3 =	*		x $460 =	
☐ APPLICATION SIZE FEE (37 CFR 1.16(s))	If the specification and drawings exceed 100 sheets of paper, the application size fee due is $310 ($155 for small entity) for each additional 50 sheets or fraction thereof. See 35 U.S.C. 41(a)(1)(G) and 37 CFR 1.16(s).				
☐ MULTIPLE DEPENDENT CLAIM PRESENT (37 CFR 1.16(j))					
* If the difference in column 1 is less than zero, enter "0" in column 2.				TOTAL	

APPLICATION AS AMENDED - PART II

AMENDMENT	09/16/2019	(Column 1) CLAIMS REMAINING AFTER AMENDMENT		(Column 2) HIGHEST NUMBER PREVIOUSLY PAID FOR	(Column 3) PRESENT EXTRA		RATE ($)	ADDITIONAL FEE ($)
	Total (37 CFR 1.16(i))	* 30	Minus	** 20	= 10		x $100 =	1000
	Independent (37 CFR 1.16(h))	* 4	Minus	*** 3	= 1		x $460 =	460
	☐ Application Size Fee (37 CFR 1.16(s))							
	☐ FIRST PRESENTATION OF MULTIPLE DEPENDENT CLAIM (37 CFR 1.16(j))							
							TOTAL ADD'L FEE	1460

AMENDMENT		(Column 1) CLAIMS REMAINING AFTER AMENDMENT		(Column 2) HIGHEST NUMBER PREVIOUSLY PAID FOR	(Column 3) PRESENT EXTRA		RATE ($)	ADDITIONAL FEE ($)
	Total (37 CFR 1.16(i))	*	Minus	**	=		x $0 =	
	Independent (37 CFR 1.16(h))	*	Minus	***	=		x $0 =	
	☐ Application Size Fee (37 CFR 1.16(s))							
	☐ FIRST PRESENTATION OF MULTIPLE DEPENDENT CLAIM (37 CFR 1.16(j))							
							TOTAL ADD'L FEE	

* If the entry in column 1 is less than the entry in column 2, write "0" in column 3.	LIE
** If the "Highest Number Previously Paid For" IN THIS SPACE is less than 20, enter "20".	/KIM R WATSON/
*** If the "Highest Number Previously Paid For" IN THIS SPACE is less than 3, enter "3".	
The "Highest Number Previously Paid For" (Total or Independent) is the highest number found in the appropriate box in column 1.	

This collection of information is required by 37 CFR 1.16. The information is required to obtain or retain a benefit by the public which is to file (and by the USPTO to process) an application. Confidentiality is governed by 35 U.S.C. 122 and 37 CFR 1.14. This collection is estimated to take 12 minutes to complete, including gathering, preparing, and submitting the completed application form to the USPTO. Time will vary depending upon the individual case. Any comments on the amount of time you require to complete this form and/or suggestions for reducing this burden, should be sent to the Chief Information Officer, U.S. Patent and Trademark Office, U.S. Department of Commerce, P.O. Box 1450, Alexandria, VA 22313-1450. DO NOT SEND FEES OR COMPLETED FORMS TO THIS ADDRESS. **SEND TO: Commissioner for Patents, P.O. Box 1450, Alexandria, VA 22313-1450.**

If you need assistance in completing the form, call 1-800-PTO-9199 and select option 2.

MASIMO 2056
Apple v. Masimo
IPR2024-00242

UNITED STATES PATENT AND TRADEMARK OFFICE

UNITED STATES DEPARTMENT OF COMMERCE
United States Patent and Trademark Office
Address: COMMISSIONER FOR PATENTS
P.O. Box 1450
Alexandria, Virginia 22313-1450
www.uspto.gov

APPLICATION NO.	FILING DATE	FIRST NAMED INVENTOR	ATTORNEY DOCKET NO.	CONFIRMATION NO.
16/532,065	08/05/2019	Ammar Al-Ali	MAS.1007C3	1092

64735 7590 10/21/2019
KNOBBE, MARTENS, OLSON & BEAR, LLP
MASIMO CORPORATION (MASIMO)
2040 MAIN STREET
FOURTEENTH FLOOR
IRVINE, CA 92614

EXAMINER
FARDANESH, MARJAN

ART UNIT	PAPER NUMBER
3791	

NOTIFICATION DATE	DELIVERY MODE
10/21/2019	ELECTRONIC

Please find below and/or attached an Office communication concerning this application or proceeding.

The time period for reply, if any, is set in the attached communication.

Notice of the Office communication was sent electronically on above-indicated "Notification Date" to the following e-mail address(es):

efiling@knobbe.com
jayna.cartee@knobbe.com

PTOL-90A (Rev. 04/07)

MASIMO 2056
Apple v. Masimo
IPR2024-00242

Office Action Summary	Application No. 16/532,065	Applicant(s) Al-Ali, Ammar	
	Examiner MARJAN FARDANESH	Art Unit 3791	AIA (FITF) Status Yes

-- The MAILING DATE of this communication appears on the cover sheet with the correspondence address --

Period for Reply

A SHORTENED STATUTORY PERIOD FOR REPLY IS SET TO EXPIRE 3 MONTHS FROM THE MAILING DATE OF THIS COMMUNICATION.

- Extensions of time may be available under the provisions of 37 CFR 1.136(a). In no event, however, may a reply be timely filed after SIX (6) MONTHS from the mailing date of this communication.
- If NO period for reply is specified above, the maximum statutory period will apply and will expire SIX (6) MONTHS from the mailing date of this communication.
- Failure to reply within the set or extended period for reply will, by statute, cause the application to become ABANDONED (35 U.S.C. § 133). Any reply received by the Office later than three months after the mailing date of this communication, even if timely filed, may reduce any earned patent term adjustment. See 37 CFR 1.704(b).

Status

1)☐ Responsive to communication(s) filed on _____.

☐ A declaration(s)/affidavit(s) under **37 CFR 1.130(b)** was/were filed on _____.

2a)☐ This action is **FINAL.** 2b) ☑ This action is non-final.

3)☐ An election was made by the applicant in response to a restriction requirement set forth during the interview on _____; the restriction requirement and election have been incorporated into this action.

4)☐ Since this application is in condition for allowance except for formal matters, prosecution as to the merits is closed in accordance with the practice under *Ex parte Quayle*, 1935 C.D. 11, 453 O.G. 213.

Disposition of Claims*

5) ☑ Claim(s) 2-31 is/are pending in the application.

5a) Of the above claim(s) _____ is/are withdrawn from consideration.

6) ☐ Claim(s) _____ is/are allowed.

7) ☑ Claim(s) 2-31 is/are rejected.

8) ☐ Claim(s) _____ is/are objected to.

9) ☐ Claim(s) _____ are subject to restriction and/or election requirement

* If any claims have been determined allowable, you may be eligible to benefit from the **Patent Prosecution Highway** program at a participating intellectual property office for the corresponding application. For more information, please see http://www.uspto.gov/patents/init_events/pph/index.jsp or send an inquiry to **PPHfeedback@uspto.gov.**

Application Papers

10)☐ The specification is objected to by the Examiner.

11)☑ The drawing(s) filed on 09/16/2019 is/are: a)☑ accepted or b)☐ objected to by the Examiner.

Applicant may not request that any objection to the drawing(s) be held in abeyance. See 37 CFR 1.85(a).

Replacement drawing sheet(s) including the correction is required if the drawing(s) is objected to. See 37 CFR 1.121(d).

Priority under 35 U.S.C. § 119

12)☐ Acknowledgment is made of a claim for foreign priority under 35 U.S.C. § 119(a)-(d) or (f).

Certified copies:

a)☐ All b)☐ Some** c)☐ None of the:

1.☐ Certified copies of the priority documents have been received.

2.☐ Certified copies of the priority documents have been received in Application No. _____.

3.☐ Copies of the certified copies of the priority documents have been received in this National Stage application from the International Bureau (PCT Rule 17.2(a)).

** See the attached detailed Office action for a list of the certified copies not received.

Attachment(s)

1) ☑ Notice of References Cited (PTO-892)

2) ☑ Information Disclosure Statement(s) (PTO/SB/08a and/or PTO/SB/08b) Paper No(s)/Mail Date 09/16/2019.

3) ☐ Interview Summary (PTO-413) Paper No(s)/Mail Date _____.

4) ☐ Other: _____.

DETAILED ACTION

Notice of Pre-AIA or AIA Status

1. The present application, filed on or after March 16, 2013, is being examined under the first inventor to file provisions of the AIA.

Status of Claims

2. Claim(s) 2-31 is/are currently under examination.

Information Disclosure Statement

3. The information disclosure statement (IDS) document(s) submitted on 09/16/2019 is/are in compliance with the provisions of 37 C.F.R. 1.97. Accordingly, the IDS document(s) have been fully considered by the examiner.

Claim Objections

4. Claim 18 objected to because of the following informalities: In claim 18 line 3, Applicant should remove "of". Appropriate correction is required.

Claim Rejections - 35 USC § 112

5. The following is a quotation of 35 U.S.C. 112(b):

> (b) CONCLUSION.—The specification shall conclude with one or more claims particularly pointing out and distinctly claiming the subject matter which the inventor or a joint inventor regards as the invention.

The following is a quotation of 35 U.S.C. 112 (pre-AIA), second paragraph:

> The specification shall conclude with one or more claims particularly pointing out and distinctly claiming the subject matter which the applicant regards as his invention.

6. Claim 17 rejected under 35 U.S.C. 112(b) or 35 U.S.C. 112 (pre-AIA), second paragraph, as being indefinite for failing to particularly point out and distinctly claim the subject matter which the inventor or a joint inventor, or for pre-AIA the applicant regards

MASIMO 2056
Apple v. Masimo
IPR2024-00242

as the invention. Claims 18-23 that depend from claim 16 are rejected due to dependency.

Claim 17 recites the limitation "the plurality of detectors" in line 10. There is insufficient antecedent basis for this limitation in the claim.

Claim Rejections - 35 USC § 103

7. The following is a quotation of 35 U.S.C. 103 which forms the basis for all obviousness rejections set forth in this Office action:

> A patent for a claimed invention may not be obtained, notwithstanding that the claimed invention is not identically disclosed as set forth in section 102, if the differences between the claimed invention and the prior art are such that the claimed invention as a whole would have been obvious before the effective filing date of the claimed invention to a person having ordinary skill in the art to which the claimed invention pertains. Patentability shall not be negated by the manner in which the invention was made.

8. Claim 2-6,8-12,15-17,19-31 is/are rejected under 35 U.S.C. 103 as being unpatentable over Fei (USPN 2014/0361147) in view of White et al. (USPN 20130204112).

Regarding claim 2, Fei discloses a physiological measurement device (figures 1-2, 5A) comprising: a plurality of emitters configured to emit light proximate a wrist of a user (elements 232 figure 2, [0041]); a material positioned between the plurality of emitters and a tissue measurement site (lens 234 figure 5A, [0041]-[0042]), wherein the material is configured to alter a shape of the light emitted from the one or more of the plurality of emitters before the light reaches the tissue measurement site ([0041]-[0043]); a plurality of detectors configured to detect the light after attenuation by tissue, the plurality of detectors further configured to output a signal responsive to the detected light (optical detectors 240 figures 2, 5A, [0025], [0041], [0058]); a light block between the plurality of emitters and the plurality of detectors and configured to prevent at least a portion of the light emitted from the plurality of emitters from reaching the detector

MASIMO 2056
Apple v. Masimo
IPR2024-00242

without first reaching the tissue (barrier 520 figures 5A, [0042], [0064]); and a processor configured to receive and process one or more signals responsive to the outputted signal and determine a physiological parameter of the user responsive to the one or more signals ([0032],[0049]-[0051]).

While Fei discloses a surface positioned between the plurality of detectors and the tissue, Fei fails to disclose a dark-colored coating comprising an opening configured to allow at least a portion of light reflected from the tissue to pass through the surface. White et al. discloses an opaque sheet with an aperture to adjust the numerical aperture of the detector ([0062], [0064]).

Therefore, it would have been obvious to one of ordinary skill in the art at the time the invention was made before the effective filing date of the claimed invention (AIA) to have implemented the opaque sheet with an aperture of White et al. into the device of Fei, with a reasonable expectation of success, because the prior art teaches that the lens 244 is placed on top of the detector 242 and the lens 244 is larger than the detector 244 as shown in figure 3C, as taught by Fei, and since adjusting the numerical aperture of the detector using an opaque sheet with an opening would have been known in the art, as taught by White et al.. The rationale would have been to adjust and narrow the detector aperture using the opaque sheet with an opening in order to reduce any stray light from reaching the detector which results in obtaining more accurate measurements, and it would have been no more than the combination of the predictable use of prior art elements according to their established functions. KSR, 550, U.S. at 417.

MASIMO 2056
Apple v. Masimo
IPR2024-00242

Regarding claim 3, the combination of Fei and White et al. discloses that the material is configured to change an output intensity profile of the light (Examiner inherently interprets that Fei teaches lenses change an output intensity profile of the light when the light passes through them).

Regarding claim 4, the combination of Fei and White et al. discloses a display configured to present visual feedback responsive to the determined physiological parameter (Fei figure 1, [0034]-[0035], [0038]).

Regarding claim 5, the combination of Fei and White et al. discloses the display is a touch-screen display (Fei figure 1, [0034]-[0035]).

Regarding claim 6, the combination of Fei and White et al. discloses the plurality of emitters and the plurality of detectors are arranged in a reflectance measurement configuration (Fei figures 1-2, 5A).

Regarding claim 8, the combination of Fei and White et al. discloses the physiological parameter comprises pulse rate (Fei [0028]).

Regarding claim 9, the combination of Fei and White et al. discloses the material comprises plastic (Fei [0042]).

Regarding claim 10, the combination of Fei and White et al. discloses the material comprises glass (Fei [0042]).

Regarding claim 11, the combination of Fei and White et al. discloses the material is configured to disperse the light emitted from the one or more of the plurality of emitters before the light reaches the tissue measurement site (Fei: The light coming from the light sources after passing through the lenses before reaching the

MASIMO 2056
Apple v. Masimo
IPR2024-00242

measurement site extends over a large or increasing area, since the lenses 234 is larger than the surface of the LEDs 232).

Regarding claim 12, the combination of Fei and White et al. discloses an amount of light transmitted by the material to the tissue measurement site is greater than 90% of the light emitted by the plurality of emitters (Examiner inherently interprets that a mineral glass or a plastic that exhibits a high degree of optical transmission at wavelengths of the optical energy emitted by LEDs 232 transmits greater than 90% of the light, [0042] Fei).

Regarding claim 15, the combination of Fei and White et al. discloses the opening in the dark-colored coating comprises a width and a length, and wherein the width is larger than the length (White et al. figures 2, 4).

Regarding claim 16, the combination of Fei and White et al. discloses the dark-colored coating comprises black (White et al. figures 2, 4).

Regarding claim 17, Fei discloses a method of determining a physiological parameter (figures 2, 5A), the method comprising: emitting, from plurality of emitters, light of one or more wavelengths proximate a wrist of a user ([0041], [0058]); shaping a at least a portion of the light emitted from the plurality of emitters before the light reaches the tissue measurement site (lens 234 figure 5A, [0041]-[0043]); and detecting, with a detector, at least a portion of the reflected light passing through (optical detectors 240 figures 2, 5A, [0025], [0041], [0058]); preventing at least a portion of the light emitted from the plurality of emitters from reaching the plurality of detectors without first reaching the tissue with a light block positioned between the plurality of emitters and the detector (barrier 520 figures 5A, [0042], [0064]); outputting, from the detector, a signal

MASIMO 2056
Apple v. Masimo
IPR2024-00242

responsive to the detected light; and electronically processing one or more signals responsive to the outputted signal to determine a physiological parameter of the user ([0032],[0049]-[0051]). While Fei discloses a surface positioned between the plurality of detectors and the tissue, Fei fails to disclose a dark-colored coating comprising an opening configured to allow at least a portion of light reflected from the tissue to pass through the surface. White et al. discloses an opaque sheet with an aperture to adjust the numerical aperture of the detector ([0062], [0064]).

Therefore, it would have been obvious to one of ordinary skill in the art at the time the invention was made before the effective filing date of the claimed invention (AIA) to have implemented the opaque sheet with an aperture of White et al. into the device of Fei, with a reasonable expectation of success, because the prior art teaches that the lens 244 is placed on top of the detector 242 and the lens 244 is larger than the detector 244 as shown in figure 3C, as taught by Fei, and since adjusting the numerical aperture of the detector using an opaque sheet with an opening would have been known in the art, as taught by White et al.. The rationale would have been to adjust and narrow the detector aperture using the opaque sheet with an opening in order to reduce any stray light from reaching the detector which results in obtaining more accurate measurements, and it would have been no more than the combination of the predictable use of prior art elements according to their established functions. KSR, 550, U.S. at 417.

Regarding claim 19, the combination of Fei and White et al. discloses presenting, with a display, visual feedback responsive to the determined physiological parameter (Fei figure 1, [0034]-[0035], [0038]).

MASIMO 2056
Apple v. Masimo
IPR2024-00242

Regarding claim 20, the combination of Fei and White et al. discloses the dark-colored coating comprises black (White et al. figures 2, 4).

Regarding claim 21, the combination of Fei and White et al. discloses the step of shaping the at least the portion of the light emitted from the plurality of emitters is performed with a material comprising at least one of glass or plastic (Fei [0042]).

Regarding claim 22, the combination of Fei and White et al. discloses that the step of shaping the at least the portion of the light emitted from the plurality of emitters comprises spreading the at least the portion of the light before the light reaches the tissue measurement site (Fei: The light coming from the light sources after passing through the lenses before reaching the measurement site extends over a large or increasing area, since the lenses 234 is larger than the surface of the LEDs 232).

Regarding claim 23, the combination of Fei and White et al. discloses the opening in the dark-colored coating comprises a width and a length, and wherein the width is larger than the length (White et al. figures 2, 4).

Regarding claim 24, Fei discloses a physiological measurement device (figures 5A,1-2) comprising: plurality of optical sources configured to emit light of one or more wavelengths proximate a wrist of a user (elements 232 figure 2, [0041], [0058]); a material positioned between the plurality of optical sources and a tissue measurement site, wherein the material is configured to shape at least a portion of the light emitted from the one or more of the plurality of optical sources before the light reaches the tissue measurement site (lens 234 figure 5A, [0041]-[0043]); a plurality of detectors configured to detect the light after attenuation by tissue, the plurality of detectors further configured to output a signal responsive to the detected light, wherein the plurality of

MASIMO 2056
Apple v. Masimo
IPR2024-00242

optical sources and the plurality of detectors are arranged in a reflectance measurement configuration (optical detectors 240 figures 2, 5A, [0025], [0041], [0058]); a light block between the plurality of optical sources and the plurality of detectors and configured to prevent at least a portion of light emitted from the plurality of optical sources from reaching the plurality of detectors without first reaching the tissue (barrier 520 figures 5A, [0042], [0064]); a processor configured to receive and process one or more signals responsive to the outputted signal and determine a physiological parameter of the user responsive to the one or more signals ([0032],[0049]-[0051]); and a touch-screen display configured to present information responsive to the determined physiological parameter ([0034]-[0035]); wherein the physiological measurement device is configured to wirelessly transmit physiological parameter data to a separate device ([0056], [0058]). While Fei discloses a surface positioned between the plurality of detectors and the tissue, Fei fails to disclose a dark-colored coating comprising an opening configured to allow at least a portion of light reflected from the tissue to pass through the surface.

White et al. discloses an opaque sheet with an aperture to adjust the numerical aperture of the detector ([0062], [0064]).

Therefore, it would have been obvious to one of ordinary skill in the art at the time the invention was made before the effective filing date of the claimed invention (AIA) to have implemented the opaque sheet with an aperture of White et al. into the device of Fei, with a reasonable expectation of success, because the prior art teaches that the lens 244 is placed on top of the detector 242 and the lens 244 is larger than the detector 244 as shown in figure 3C, as taught by Fei, and since adjusting the numerical aperture of the detector using an opaque sheet with an opening would have been

MASIMO 2056
Apple v. Masimo
IPR2024-00242

known in the art, as taught by White et al.. The rationale would have been to adjust and narrow the detector aperture using the opaque sheet with an opening in order to reduce any stray light from reaching the detector which results in obtaining more accurate measurements, and it would have been no more than the combination of the predictable use of prior art elements according to their established functions. KSR, 550, U.S. at 417.

Regarding claim 25, the combination of Fei and White et al. discloses the opening in the dark-colored coating comprises a width and a length, and wherein the width is larger than the length (White et al. figures 2, 4).

Regarding claim 26, the combination of Fei and White et al. discloses that the material comprises at least one of glass or plastic (Fei [0042]).

Regarding claim 27, Fei discloses a system configured to measure one or more physiological parameters of a user (figures 1-2, 5A), the system comprising: a physiological measurement device comprising: plurality of emitters configured to emit light proximate a wrist of a user (elements 232 figure 2, [0041], [0058]); a material positioned between the plurality of emitters and a tissue measurement site, wherein the material is configured to alter a shape of the light emitted from the one or more emitters of the plurality of emitters before the light reaches the tissue measurement site (lens 234 figure 5A, [0041]-[0043]); a plurality of detectors configured to detect the light after attenuation by tissue, the plurality of detectors further configured to output a signal responsive to the detected light (optical detectors 240 figures 2, 5A, [0025], [0041], [0058]); a light block between the plurality of emitters and the plurality of detectors and configured to prevent at least a portion of light emitted from the plurality of emitters from

MASIMO 2056
Apple v. Masimo
IPR2024-00242

reaching the plurality of detectors without first reaching the tissue (barrier 520 figures 5A, [0042], [0064]); and a processor configured to receive and process one or more signals responsive to the outputted signal and determine a physiological parameter of the user responsive to the one or more signals ([0032],[0049]-[0051]); and a processing device configured to wirelessly receive physiological parameter data from the physiological measurement device, wherein the processing device comprises a user interface, a storage device, and a network interface configured to wirelessly communicate with the physiological measurement device (figure 4, [0049]-[0057]), and wherein the user interface includes a touch-screen display configured to present information relating to the physiological parameter data ([0034]-[0035]). While Fei discloses a surface positioned between the plurality of detectors and the tissue, Fei fails to disclose a dark-colored coating comprising an opening configured to allow at least a portion of light reflected from the tissue to pass through the surface.

White et al. discloses an opaque sheet with an aperture to adjust the numerical aperture of the detector ([0062], [0064]).

Therefore, it would have been obvious to one of ordinary skill in the art at the time the invention was made before the effective filing date of the claimed invention (AIA) to have implemented the opaque sheet with an aperture of White et al. into the device of Fei, with a reasonable expectation of success, because the prior art teaches that the lens 244 is placed on top of the detector 242 and the lens 244 is larger than the detector 244 as shown in figure 3C, as taught by Fei, and since adjusting the numerical aperture of the detector using an opaque sheet with an opening would have been known in the art, as taught by White et al.. The rationale would have been to adjust and

MASIMO 2056
Apple v. Masimo
IPR2024-00242

narrow the detector aperture using the opaque sheet with an opening in order to reduce any stray light from reaching the detector which results in obtaining more accurate measurements, and it would have been no more than the combination of the predictable use of prior art elements according to their established functions. KSR, 550, U.S. at 417.

Regarding claim 28, the combination of Fei and White et al. discloses that the system is configured to determine a state of wellness of the user based on the determined physiological parameter (Fei [0028]).

Regarding claim 29, the combination of Fei and White et al. discloses that the system is configured to determine a trend of wellness of the user based on the determined physiological parameter (Fei [0028]).

Regarding claim 30, the combination of Fei and White et al. discloses that the visual feedback presented by the touch-screen display is responsive to a pulse rate of the user (Fei [0028], figure 1, [0034]-[0035]).

Regarding claim 31, the combination of Fei and White et al. discloses that the material comprises at least one of glass or plastic (Fei [0042]).

9. Claim 13 is/are rejected under 35 U.S.C. 103 as being unpatentable over Fei (USPN 2014/0361147) in view of White et al. (USPN20130204112) as applied to claim 2 above, and further in view of Unlu et al. (USPN 2006/0182659).

Regarding claim 13, Fei in view of White et al. fails to disclose that the light emitted from the one or more of the plurality of emitters comprises a Gausian intensity profile after interaction with the material. Unlu et al. discloses the light beam has Gausian intensity profile ([0025]). Therefore, it would have been obvious to one of

MASIMO 2056
Apple v. Masimo
IPR2024-00242

ordinary skill in the art at the time the invention was made before the effective filing date of the claimed invention (AIA) to have implemented the light having Gausian intensity profile into the device of Fei in view of White et al., with a reasonable expectation of success, because the prior art teaches emitting light, as taught by Fei, and since emitting light with Gausian intensity profile would have been known in the art, as taught by Unlu et al.. The rationale would have been to emit light having Gausian intensity profile in obtaining more accurate measurements, and it would have been no more than the combination of the predictable use of prior art elements according to their established functions. KSR, 550, U.S. at 417.

10. Claim 2-4,6-8,10-12,14-18 is/are rejected under 35 U.S.C. 103 as being unpatentable over Scharf (USPN 5,830,137-cited by the Applicant) in view of Fei (USPN 2014/0361147) in view of White et al. (USPN20130204112).

Regarding claim 2, Scharf discloses a physiological measurement device (figures 3 and 6) comprising: plurality of emitters configured to emit light proximate a wrist of a user (elements 13 and 15 figure 3, Col.8 lines 29-50); a material positioned between the plurality of emitters and a tissue measurement site, wherein the material is configured to alter a shape of at least a portion of the light emitted from the one or more of the plurality of emitters before the light reaches the tissue measurement site (elements 16 and 18 figures 3 and 6, discrete lenses to focus radiant energy from the LEDs onto the skin, Col.8 lines 51-64); a detector configured to detect the light after attenuation by tissue, the detector further configured to output a signal responsive to the detected light; a light block between the plurality of emitters and the detector and configured to prevent at least a portion of the light emitted from the plurality of emitters from reaching the

MASIMO 2056
Apple v. Masimo
IPR2024-00242

detector without first reaching the tissue (light shield 87 figure 6, Col.8 lines 45-50); and a processor configured to receive and process one or more signals responsive to the outputted signal and determine a physiological parameter of the user responsive to the one or more signals (processor 30 figure 1, Col.5 lines 15-60). Scharf fails to disclose plurality of detectors. Fei discloses that the detector housing comprises either a single photodiode or additional photodiodes within the detector housing ([0041]). Therefore, it would have been obvious to one of ordinary skill in the art at the time the invention was made before the effective filing date of the claimed invention (AIA) to have implemented additional photodiodes within the detector housing of Scharf, with a reasonable expectation of success, because the prior art teaches that detector housing including photodiode, as taught by Scharf, and since positioning plurality of photodiodes within the detector housing would have been known in the art, as taught by Fei. The rationale would have been to provide additional photodiodes which results in obtaining more accurate measurements, and it would have been no more than the combination of the predictable use of prior art elements according to their established functions. KSR, 550, U.S. at 417.

While the combination of Scharf and Fei discloses a surface positioned between the plurality of detectors and the tissue, the combination of Scharf and Fei fails to disclose a dark-colored coating comprising an opening configured to allow at least a portion of light reflected from the tissue to pass through the surface. White et al. discloses an opaque sheet with an aperture to adjust the numerical aperture of the detector ([0062], [0064]).

MASIMO 2056
Apple v. Masimo
IPR2024-00242

Therefore, it would have been obvious to one of ordinary skill in the art at the time the invention was made before the effective filing date of the claimed invention (AIA) to have implemented the opaque sheet with an aperture of White et al. into the device of the combination of Scharf and Fei, with a reasonable expectation of success, because the prior art teaches that the lens is placed on top of the detector and the lens is larger than the detector, as taught by the combination of Scharf and Fei, and since adjusting the numerical aperture of the detector using an opaque sheet with an opening would have been known in the art, as taught by White et al.. The rationale would have been to adjust and narrow the detector aperture using the opaque sheet with an opening in order to reduce any stray light from reaching the detector which results in obtaining more accurate measurements, and it would have been no more than the combination of the predictable use of prior art elements according to their established functions. KSR, 550, U.S. at 417.

Regarding claim 3, the combination of Scharf and Fei and White et al. discloses that the material is configured to change an output intensity profile of the light (Scharf: Examiner inherently interprets that lenses 16 and 18 change an output intensity profile of the light when the light passes through them).

Regarding claim 4, the combination of Scharf and Fei and White et al. discloses a display configured to present visual feedback responsive to the determined physiological parameter (Scharf Col.7 lines 20-35, figure 1).

Regarding claim 6, the combination of Scharf and Fei and White et al. discloses that the plurality of emitters and the plurality of detectors are arranged in a reflectance measurement configuration (Scharf figures 3 and 6).

MASIMO 2056
Apple v. Masimo
IPR2024-00242

Regarding claim 7, the combination of Scharf and Fei and White et al. discloses the light block comprises an at least partially circular shape, and wherein the plurality of emitters are positioned outside the light block and the plurality of detectors are positioned inside the light block (Scharf light shield 87 figures 3, 6).

Regarding claim 8, the combination of Scharf and Fei and White et al. discloses the physiological parameter comprises pulse rate (Scharf Col. 8 lines 1-10).

Regarding claim 10, Scharf discloses that the material comprises glass (Scharf Col.9 lines 4-6).

Regarding claim 11, the combination of Scharf and Fei and White et al. discloses the material is configured to disperse the light emitted from the one or more of the plurality of emitters before the light reaches the tissue measurement site (Scharf: The light coming from the light sources after passing through the lenses 16 and 18 before reaching the measurement site extends over a large or increasing area, since the lenses 16 and 18 are larger than the surface of the LEDs 13 and 15).

Regarding claim 12, the combination of Scharf and Fei and White et al. discloses an amount of light transmitted by the material to the tissue measurement site is greater than 90% of the light emitted by the plurality of emitters (Examiner inherently interprets that the amount of light transmitted by the lenses is greater than 90% of the light, Scharf Col.8 lines 55-65).

Regarding claim 14, the combination of Scharf and Fei and White et al. discloses the altered shape of the light after interaction with the material comprises a circular geometry (Scharf: The light passing through the lenses 16 and 18 which form a circular shape is configured to be distributed in a circular shape; figures 3,5).

MASIMO 2056
Apple v. Masimo
IPR2024-00242

Regarding claim 15, the combination of Scharf and Fei and White et al. discloses the opening in the dark-colored coating comprises a width and a length, and wherein the width is larger than the length (White et al. figures 2, 4).

Regarding claim 16, the combination of Scharf and Fei and White et al. discloses the dark-colored coating comprises black (White et al. Figures 2, 4).

11. Claim 13 is/are rejected under 35 U.S.C. 103 as being unpatentable over Scharf (USPN 5,830,137-cited by the Applicant) in view of Fei (USPN 2014/0361147) in view of White et al. (USPN20130204112) as applied to claim 2 above, and further in view of Unlu et al. (USPN 2006/0182659).

Regarding claim 13, Scharf in view of Fei in view of White et al. fails to disclose that the light emitted from the one or more of the plurality of emitters comprises a Gausian intensity profile after interaction with the material. Unlu et al. discloses the light beam has Gausian intensity profile ([0025]). Therefore, it would have been obvious to one of ordinary skill in the art at the time the invention was made before the effective filing date of the claimed invention (AIA) to have implemented the light having Gausian intensity profile into the device of Scharf in view of Fei in view of White et al., with a reasonable expectation of success, because the prior art teaches emitting light, as taught by Scharf in view of Fei in view of White et al., and since emitting light with Gausian intensity profile would have been known in the art, as taught by Unlu et al.. The rationale would have been to emit light having Gausian intensity profile in obtaining more accurate measurements, and it would have been no more than the combination of the predictable use of prior art elements according to their established functions. KSR, 550, U.S. at 417.

MASIMO 2056
Apple v. Masimo
IPR2024-00242

12. Claims 17-23 is/are rejected under 35 U.S.C. 103 as being unpatentable over Scharf (USPN 5,830,137-cited by the Applicant) in view of White et al. (USPN 20130204112).

Regarding claim 17, Scharf discloses a method of measuring a physiological parameter (figures 3 and 6), the method comprising: emitting, from a plurality of emitters, light proximate a wrist of a user (elements 13 and 15 figure 3, Col.8 lines 29-50); shaping at least a portion of the light emitted from the plurality of emitters before the light reaches the tissue measurement site (elements 16 and 18 figures 3 and 6, discrete lenses to focus radiant energy from the LEDs onto the skin, Col.8 lines 51-64); permitting light reflected from tissue of the user to pass through a surface and detecting, with a detector, at least a portion of the reflected light passing through , wherein the surface is positioned between the detector and the tissue (Col.8 lines 29-65, photodiode 26 figure 3); preventing at least a portion of the light emitted from the plurality of emitters from reaching the detector without first reaching the tissue with a light block positioned between the plurality of emitters and the detector (light shield 87 figure 6, Col.8 lines 45-50); outputting, from the detector, at least one signal responsive to the detected light and electronically processing one or more signals responsive to the outputted at least one signal to determine a physiological parameter (figure 1, Col.5 lines 40-60, Col.8 lines 40-66).

While Scharf discloses a surface positioned between the detector and the tissue, Scharf fails to disclose a dark-colored coating comprising an opening configured to allow at least a portion of light reflected from the tissue to pass through the surface.

MASIMO 2056
Apple v. Masimo
IPR2024-00242

White et al. discloses an opaque sheet with an aperture to adjust the numerical aperture of the detector ([0062], [0064]).

Therefore, it would have been obvious to one of ordinary skill in the art at the time the invention was made before the effective filing date of the claimed invention (AIA) to have implemented the opaque sheet with an aperture of White et al. into the device of of Scharf, with a reasonable expectation of success, because the prior art teaches that the lens is placed on top of the detector and the lens is larger than the detector, as taught by Scharf, and since adjusting the numerical aperture of the detector using an opaque sheet with an opening would have been known in the art, as taught by White et al.. The rationale would have been to adjust and narrow the detector aperture using the opaque sheet with an opening in order to reduce any stray light from reaching the detector which results in obtaining more accurate measurements, and it would have been no more than the combination of the predictable use of prior art elements according to their established functions. KSR, 550, U.S. at 417.

Regarding claim 18, Scharf in view of White et al. discloses that the light block comprises an at least partially circular shape, and wherein the plurality of emitters are positioned outside the light block and the detector is positioned inside the light block (Scharf light shield 87 figures 3, 6).

Regarding claim 19, Scharf in view of White et al. discloses presenting, with a display, visual feedback responsive to the determined physiological parameter (Scharf Col.7 lines 20-35, figure 1).

Regarding claim 20, Scharf in view of White et al. discloses the dark-colored coating comprises black (White et al. figures 2, 4).

MASIMO 2056
Apple v. Masimo
IPR2024-00242

Regarding claim 21, Scharf in view of White et al. discloses the step of shaping the at least the portion of the light emitted from the plurality of emitters is performed with a material comprising at least one of glass or plastic (Scharf Col.9 lines 4-6).

Regarding claim 22, Scharf in view of White et al. discloses that the step of shaping the at least the portion of the light emitted from the plurality of emitters comprises spreading the at least the portion of the light before the light reaches the tissue measurement site (Scharf: The light coming from the light sources after passing through the lenses 16 and 18 before reaching the measurement site extends over a large or increasing area, since the lenses 16 and 18 are larger than the surface of the LEDs 13 and 15).

Regarding claim 23, Scharf in view of White et al. discloses the opening in the dark-colored coating comprises a width and a length, and wherein the width is larger than the length (White et al. figures 2, 4).

Double Patenting

13. The nonstatutory double patenting rejection is based on a judicially created doctrine grounded in public policy (a policy reflected in the statute) so as to prevent the unjustified or improper timewise extension of the "right to exclude" granted by a patent and to prevent possible harassment by multiple assignees. A nonstatutory double patenting rejection is appropriate where the conflicting claims are not identical, but at least one examined application claim is not patentably distinct from the reference claim(s) because the examined application claim is either anticipated by, or would have been obvious over, the reference claim(s). See, e.g., *In re Berg*, 140 F.3d 1428, 46 USPQ2d 1226 (Fed. Cir. 1998); *In re Goodman*, 11 F.3d 1046, 29 USPQ2d 2010 (Fed.

MASIMO 2056
Apple v. Masimo
IPR2024-00242

Cir. 1993); *In re Longi*, 759 F.2d 887, 225 USPQ 645 (Fed. Cir. 1985); *In re Van Ornum*, 686 F.2d 937, 214 USPQ 761 (CCPA 1982); *In re Vogel*, 422 F.2d 438, 164 USPQ 619 (CCPA 1970); *In re Thorington*, 418 F.2d 528, 163 USPQ 644 (CCPA 1969).

A timely filed terminal disclaimer in compliance with 37 CFR 1.321(c) or 1.321(d) may be used to overcome an actual or provisional rejection based on nonstatutory double patenting provided the reference application or patent either is shown to be commonly owned with the examined application, or claims an invention made as a result of activities undertaken within the scope of a joint research agreement. See MPEP § 717.02 for applications subject to examination under the first inventor to file provisions of the AIA as explained in MPEP § 2159. See MPEP §§ 706.02(l)(1) - 706.02(l)(3) for applications not subject to examination under the first inventor to file provisions of the AIA. A terminal disclaimer must be signed in compliance with 37 CFR 1.321(b).

The USPTO Internet website contains terminal disclaimer forms which may be used. Please visit www.uspto.gov/patent/patents-forms. The filing date of the application in which the form is filed determines what form (e.g., PTO/SB/25, PTO/SB/26, PTO/AIA/25, or PTO/AIA/26) should be used. A web-based eTerminal Disclaimer may be filled out completely online using web-screens. An eTerminal Disclaimer that meets all requirements is auto-processed and approved immediately upon submission. For more information about eTerminal Disclaimers, refer to www.uspto.gov/patents/process/file/efs/guidance/eTD-info-I.jsp.

14. Claims 2-31 provisionally rejected on the ground of nonstatutory double patenting as being unpatentable over claim 2-31 of copending Application No. 16/532061

MASIMO 2056
Apple v. Masimo
IPR2024-00242

(reference application). Although the claims at issue are not identical, they are not patentably distinct from each other because both the instant Application and the copending Application are directed towards a physiological monitoring device and method for emitting light proximate a wrist, shaping at least a portion of the emitted light, permitting light reflected from tissue to pass through an opening in a dark-colored coating on a surface and detecting at least a portion of the reflected light passing though the opening, preventing at least a portion of the emitted light from reaching the detector without first reaching the tissue, outputting at least one signal responsive to the detected light, electronically processing one or more signals responsive to the outputted at least one signal to determine a physiological parameter.

This is a provisional nonstatutory double patenting rejection because the patentably indistinct claims have not in fact been patented.

Conclusion

Any inquiry concerning this communication or earlier communications from the examiner should be directed to MARJAN FARDANESH whose telephone number is (571)270-5508. The examiner can normally be reached on Monday-Friday 9:00-17:00.

Examiner interviews are available via telephone, in-person, and video conferencing using a USPTO supplied web-based collaboration tool. To schedule an interview, applicant is encouraged to use the USPTO Automated Interview Request (AIR) at http://www.uspto.gov/interviewpractice.

If attempts to reach the examiner by telephone are unsuccessful, the examiner's supervisor, Patricia Mallari can be reached on (571)272-4729. The fax phone number for the organization where this application or proceeding is assigned is 571-273-8300.

MASIMO 2056
Apple v. Masimo
IPR2024-00242

Information regarding the status of an application may be obtained from the Patent Application Information Retrieval (PAIR) system. Status information for published applications may be obtained from either Private PAIR or Public PAIR. Status information for unpublished applications is available through Private PAIR only. For more information about the PAIR system, see http://pair-direct.uspto.gov. Should you have questions on access to the Private PAIR system, contact the Electronic Business Center (EBC) at 866-217-9197 (toll-free). If you would like assistance from a USPTO Customer Service Representative or access to the automated information system, call 800-786-9199 (IN USA OR CANADA) or 571-272-1000.

/MARJAN FARDANESH/

Examiner, Art Unit 3735

MASIMO 2056
Apple v. Masimo
IPR2024-00242

PTO/SB/06 (09-11)
Approved for use through 1/31/2014. OMB 0651-0032
U.S. Patent and Trademark Office; U.S. DEPARTMENT OF COMMERCE
Under the Paperwork Reduction Act of 1995, no persons are required to respond to a collection of information unless it displays a valid OMB control number.

PATENT APPLICATION FEE DETERMINATION RECORD Substitute for Form PTO-875	Application or Docket Number 16/532,065	Filing Date 08/05/2019	☐ To be Mailed

ENTITY: ☑ LARGE ☐ SMALL ☐ MICRO

APPLICATION AS FILED - PART I

FOR	(Column 1) NUMBER FILED	(Column 2) NUMBER EXTRA		RATE ($)	FEE ($)
☐ BASIC FEE (37 CFR 1.16(a), (b), or (c))	N/A	N/A		N/A	
☐ SEARCH FEE (37 CFR 1.16(k), (i), or (m))	N/A	N/A		N/A	
☐ EXAMINATION FEE (37 CFR 1.16(o), (p), or (q))	N/A	N/A		N/A	
TOTAL CLAIMS (37 CFR 1.16(i))	minus 20 =	*		x $100 =	
INDEPENDENT CLAIMS (37 CFR 1.16(h))	minus 3 =	*		x $460 =	
☐ APPLICATION SIZE FEE (37 CFR 1.16(s))	If the specification and drawings exceed 100 sheets of paper, the application size fee due is $310 ($155 for small entity) for each additional 50 sheets or fraction thereof. See 35 U.S.C. 41(a)(1)(G) and 37 CFR 1.16(s).				
☐ MULTIPLE DEPENDENT CLAIM PRESENT (37 CFR 1.16(j))					
* If the difference in column 1 is less than zero, enter "0" in column 2.				TOTAL	

APPLICATION AS AMENDED - PART II

AMENDMENT	11/14/2019	(Column 1) CLAIMS REMAINING AFTER AMENDMENT		(Column 2) HIGHEST NUMBER PREVIOUSLY PAID FOR	(Column 3) PRESENT EXTRA		RATE ($)	ADDITIONAL FEE ($)
	Total (37 CFR 1.16(i))	* 30	Minus	** 30	= 0		x $100 =	0
	Independent (37 CFR 1.16(h))	* 4	Minus	*** 4	= 0		x $460 =	0
	☐ Application Size Fee (37 CFR 1.16(s))							
	☐ FIRST PRESENTATION OF MULTIPLE DEPENDENT CLAIM (37 CFR 1.16(j))							
							TOTAL ADD'L FEE	0

AMENDMENT		(Column 1) CLAIMS REMAINING AFTER AMENDMENT		(Column 2) HIGHEST NUMBER PREVIOUSLY PAID FOR	(Column 3) PRESENT EXTRA		RATE ($)	ADDITIONAL FEE ($)
	Total (37 CFR 1.16(i))	*	Minus	**	=		x $0 =	
	Independent (37 CFR 1.16(h))	*	Minus	***	=		x $0 =	
	☐ Application Size Fee (37 CFR 1.16(s))							
	☐ FIRST PRESENTATION OF MULTIPLE DEPENDENT CLAIM (37 CFR 1.16(j))							
							TOTAL ADD'L FEE	

* If the entry in column 1 is less than the entry in column 2, write "0" in column 3.	LIE
** If the "Highest Number Previously Paid For" IN THIS SPACE is less than 20, enter "20".	/ANNETTE COWAN/
*** If the "Highest Number Previously Paid For" IN THIS SPACE is less than 3, enter "3".	
The "Highest Number Previously Paid For" (Total or Independent) is the highest number found in the appropriate box in column 1.	

This collection of information is required by 37 CFR 1.16. The information is required to obtain or retain a benefit by the public which is to file (and by the USPTO to process) an application. Confidentiality is governed by 35 U.S.C. 122 and 37 CFR 1.14. This collection is estimated to take 12 minutes to complete, including gathering, preparing, and submitting the completed application form to the USPTO. Time will vary depending upon the individual case. Any comments on the amount of time you require to complete this form and/or suggestions for reducing this burden, should be sent to the Chief Information Officer, U.S. Patent and Trademark Office, U.S. Department of Commerce, P.O. Box 1450, Alexandria, VA 22313-1450. DO NOT SEND FEES OR COMPLETED FORMS TO THIS ADDRESS. **SEND TO: Commissioner for Patents, P.O. Box 1450, Alexandria, VA 22313-1450.**

If you need assistance in completing the form, call 1-800-PTO-9199 and select option 2.

MASIMO 2056
Apple v. Masimo
IPR2024-00242

IN THE UNITED STATES PATENT AND TRADEMARK OFFICE

Inventor	:	Ammar Al-Ali
App. No.	:	16/532,065
Filed	:	August 5, 2019
For	:	PHYSIOLOGICAL MONITORING DEVICES, SYSTEMS, AND METHODS
Examiner	:	Fardanesh, Marjan
Art Unit	:	3791
Conf. No.	:	1092

RESPONSE TO NON-FINAL OFFICE ACTION DATED OCTOBER 21, 2019

Mail Stop Amendment
Commissioner for Patents
P.O. Box 1450
Alexandria, VA 22313-1450

Dear Commissioner:

In response to the Non-Final Office Action dated October 21, 2019, Applicant submits the following.

Amendments to the Claims are reflected in the listing of claims which begins on page 2 of this paper.

Remarks begin on page 8 of this paper.

MASIMO 2056
Apple v. Masimo
IPR2024-00242

AMENDMENTS TO THE CLAIMS

A complete listing of all claims is presented below with insertions underlined (e.g., insertion), and deletions struck through or in double brackets (e.g., ~~deletion~~ or [[deletion]]).

1. **(Cancelled)**
2. **(Currently Amended)** A physiological monitoring device comprising:

a plurality of emitters, wherein each of the plurality of emitters is configured to emit light proximate a wrist of a user;

a material positioned between the plurality of emitters and a[[the]] tissue measurement site, the material configured to ~~alter a shape of~~distribute the light emitted from one or more of the plurality of emitters ~~before the light reaches the tissue measurement site~~ to form a customized shape on a surface of the tissue measurement site;

a plurality of detectors configured to detect the light after attenuation by tissue, the plurality of detectors further configured to output at least one signal responsive to the detected light;

a surface comprising a dark-colored coating, the surface positioned between the plurality of detectors and the tissue, the dark-colored coating comprising an opening configured to allow at least a portion of light reflected from the tissue to pass through the surface;

a light block between the plurality of emitters and the plurality of detectors and configured to prevent at least a portion of the light emitted from the plurality of emitters from reaching the plurality of detectors without first reaching the tissue; and

a processor configured to receive and process one or more signals responsive to the at least one outputted signal and determine a physiological parameter of the user responsive to the one or more signals.

3. **(Previously Presented)** The physiological monitoring device of Claim 2, wherein the material is configured to change an output intensity profile of the light.

4. **(Previously Presented)** The physiological monitoring device of Claim 2, further comprising a display configured to present visual feedback responsive to the determined physiological parameter.

5. **(Previously Presented)** The physiological monitoring device of Claim 4, wherein the display is a touch-screen display.

6. **(Previously Presented)** The physiological monitoring device of Claim 2, wherein the plurality of emitters and the plurality of detectors are arranged in a reflectance measurement configuration.

7. **(Previously Presented)** The physiological monitoring device of Claim 2, wherein the light block comprises an at least partially circular shape, and wherein the plurality of emitters are positioned outside the light block and the plurality of detectors are positioned inside the light block.

8. **(Previously Presented)** The physiological monitoring device of Claim 2, wherein the physiological parameter comprises pulse rate.

9. **(Previously Presented)** The physiological monitoring device of Claim 2, wherein the material comprises plastic.

10. **(Previously Presented)** The physiological monitoring device of Claim 2, wherein the material comprises glass.

11. **(Cancelled)**

12. **(Previously Presented)** The physiological monitoring device of Claim 2, wherein an amount of light transmitted by the material to the tissue measurement site is greater than 90% of the light emitted by the plurality of emitters.

13. **(Previously Presented)** The physiological monitoring device of Claim 2, wherein the light emitted from the one or more of the plurality of emitters comprises a Gausian intensity profile after interaction with the material.

14. **(Currently Amended)** The physiological monitoring device of Claim 2, wherein the ~~altered~~ customized shape ~~of the light after interaction with the material~~ comprises a circular geometry.

15. **(Previously Presented)** The physiological monitoring device of Claim 2, wherein the opening in the dark-colored coating comprises a width and a length, and wherein the width is larger than the length.

16. **(Previously Presented)** The physiological monitoring device of Claim 2, wherein the dark-colored coating comprises black.

17. **(Currently Amended)** A method of measuring a physiological parameter, the method comprising:

emitting, from a plurality of emitters, light proximate a wrist of a user;

shaping at least a portion of the light emitted from the plurality of emitters to form a customized shape on a tissue measurement site ~~before the light reaches the tissue measurement site~~;

permitting light reflected from tissue of the user to pass through an opening in a dark-colored coating on a surface and detecting, with a detector, at least a portion of the reflected light passing through the opening, wherein the surface is positioned between the detector and the tissue;

preventing at least a portion of the light emitted from the plurality of emitters from reaching the ~~plurality of~~ detector[[s]] without first reaching the tissue with a light block positioned between the plurality of emitters and the detector;

outputting, from the detector, at least one signal responsive to the detected light; and

electronically processing one or more signals responsive to the outputted at least one signal to determine a physiological parameter.

18. **(Currently Amended)** The method of Claim 17, wherein the light block comprises an at least partially circular shape, and wherein the plurality of emitters are positioned outside the light block and the [[of]]detector is positioned inside the light block.

19. **(Previously Presented)** The method of Claim 17, further comprising presenting, with a display, visual feedback responsive to the determined physiological parameter.

20. **(Previously Presented)** The method of Claim 17, wherein the dark-colored coating comprises black.

21. **(Previously Presented)** The method of Claim 17, wherein the step of shaping the at least the portion of the light emitted from the plurality of emitters is performed with a material comprising at least one of glass or plastic.

22. **(Cancelled)**

23. **(Previously Presented)** The method of Claim 17, wherein the opening in the dark-colored coating comprises a width and a length, and wherein the width is larger than the length.

24. **(Currently Amended)** A physiological monitoring device comprising:

a plurality of optical sources configured to emit light proximate a wrist of a user;

a material positioned between the plurality of optical sources and a tissue measurement site, wherein the material is configured to project a shape of at least a portion of the light emitted from one or more of the plurality of emitters toward~~before the light reaches~~ the tissue measurement site;

a plurality of detectors configured to detect the light after attenuation by tissue, the plurality of detectors further configured to output at least one signal responsive to the detected light, wherein the plurality of optical sources and the plurality of detectors are arranged in a reflectance measurement configuration;

a surface comprising a dark-colored coating, the surface positioned between the plurality of detectors and the tissue, the dark-colored coating comprising an opening configured to allow at least a portion of light reflected from the tissue to pass through the surface;

a light block between the plurality of optical sources and the plurality of detectors and configured to prevent at least a portion of light emitted from the plurality of optical sources from reaching the plurality of detectors without first reaching the tissue;

a processor configured to receive and process one or more signals responsive to the at least one outputted signal and determine a physiological parameter of the user responsive to the one or more signals; and

a touch-screen display configured to present visual feedback responsive to the determined physiological parameter;

wherein the physiological monitoring device is configured to wirelessly transmit physiological parameter data to a separate device.

25. **(Previously Presented)** The physiological monitoring device of Claim 24, wherein the opening in the dark-colored coating comprises a width and a length, and wherein the width is larger than the length.

26. **(Currently Amended)** The physiological monitoring device of Claim 24, wherein the material comprises at least one of glass [[or]]and plastic.

27. **(Currently Amended)** A system configured to measure one or more physiological parameters of a user, the system comprising:

a physiological monitoring device comprising:

a plurality of emitters configured to emit light proximate a wrist of a user;

a material positioned between the plurality of emitters and a tissue measurement site, the material configured to ~~alter~~ project a shape of the light emitted from one or more of the plurality of emitters toward~~before the light reaches~~ the tissue measurement site;

a plurality of detectors configured to detect the light after attenuation by tissue, the plurality of detectors further configured to output at least one signal responsive to the detected light;

a surface comprising a dark-colored coating, the surface positioned between the plurality of detectors and the tissue, the dark-colored coating comprising an opening configured to allow at least a portion of light reflected from the tissue to pass through the surface;

a light block between the plurality of emitters and the plurality of detectors and configured to prevent at least a portion of light from the plurality of emitters from reaching the plurality of detectors without first reaching the tissue; and

a processor configured to receive and process one or more signals responsive to the outputted at least one signal and determine a physiological parameter of the user responsive to the one or more signals; and

a processing device configured to wirelessly receive physiological parameter data from the physiological monitoring device, wherein the processing device comprises a user interface, a storage device, and a network interface configured to wirelessly communicate with the physiological monitoring device, and wherein the user interface includes a touch-screen display configured to present visual feedback responsive to the physiological parameter data.

28. **(Previously Presented)** The system of Claim 27, wherein the system is configured to determine a state of wellness of the user based on the determined physiological parameter.

29. **(Previously Presented)** The system of Claim 27, wherein the system is configured to determine a trend of wellness of the user based on the determined physiological parameter.

30. **(Previously Presented)** The system of Claim 27, wherein the visual feedback presented by the touch-screen display is responsive to a pulse rate of the user.

31. **(Currently Amended)** The system of Claim 27, wherein the material comprises at least one of glass [[or]]and plastic.

32. **(New)** The system of Claim 27, wherein the projected shape comprises a width and a length, and wherein the width is different from the length.

33. **(New)** The physiological monitoring device of Claim 24, wherein the projected shape comprises a width and a length, and wherein the width is different from the length.

REMARKS

This paper is filed in response to the Non-Final Office Action mailed October 21, 2019 ("Office Action"), in connection with the above-referenced patent application. Claims 2-31 were pending prior to the submission of this paper. Claims 2, 14, 17-18, 24, 26-27, and 31 have been amended and Claims 11 and 22 have been cancelled without prejudice or disclaimer. Claims 32-33 have been added as new. Thus, Claims 2-10, 12-21, and 23-33 are pending. Applicant respectfully requests reconsideration of the pending claims in light of the present response.

A. Double Patenting

The Office Action provisionally rejected Claims 2-31 on the ground of nonstatutory double patenting as being allegedly unpatentable over Claims 2-31 of copending U.S. Patent App. No. 16/532,061. *See* Office Action, pgs. 20-22. Applicant respectfully requests that these rejections be held in abeyance until the claims of the present application are in condition for allowance.

B. Claim Objections

The Office Action objected to Claim 18 because of an informality and suggested removal of the term "of" in line 3. *See* Office Action, pg. 2. Applicant has amended Claim 18 as shown above and believes these objection are thereby rendered moot.

C. Claim Rejections Under 35 U.S.C. § 112

The Office Action rejected Claim 17 under 35 U.S.C. § 112 as being indefinite for failing to particularly point out and distinctly claim the subject matter which the inventor or a joint inventor (or for pre-AIA, the applicant) regards as the invention. More specifically, the Office Action alleged that there is insufficient antecedent basis for the phrase "the plurality of detectors" in Claim 17. Applicant traverses this rejection. However, in the interest of progressing prosecution, Applicant has amended Claim 17 without disclaimer as shown above and believes this rejection is thereby rendered moot. Applicant reserves the right to pursue the claim as previously presented in one or more continuation applications.

D. The Pending Claims Are Patentable over the Cited Art

Claims 2-6, 8-12, 15-17, and 19-31 stand rejected under 35 U.S.C. § 103 as being unpatentable over U.S. Patent Pub. No. 2014/0361147 to Fei ("Fei") in view of U.S. Patent Pub. No. 2013/0204112 to White et al. ("White"). Claim 13 stands rejected under 35 U.S.C. § 103 as being unpatentable over Fei in view of White and U.S. Patent Pub. No. 2006/0182659 to Unlu et al. ("Unlu"). Claims 2-4, 6-8, 10-12, and 14-18 stand rejected under 35 U.S.C. § 103 as being unpatentable over U.S. Patent No. 5,830,137 to Scharf ("Scharf") in view of Fei and White. Claim 13 stands rejected under 35 U.S.C. § 103 as being unpatentable over Scharf in view of Fei, White, and Unlu. Claims 17-23 stand rejected under 35 U.S.C. § 103 as being unpatentable over Scharf in view of White. Applicant respectfully traverses these rejections and requests that the rejections of the pending claims be withdrawn for at least the following reasons.

Independent Claims 2, 24, and 27 recite, among other things, "a surface comprising a dark-colored coating, the surface positioned between the plurality of detectors and the tissue, the dark-colored coating comprising an opening configured to allow at least a portion of light reflected from the tissue to pass through the surface." Independent Claim 17 recites, among other things, "permitting light reflected from tissue of the user to pass through an opening in a dark-colored coating on a surface and detecting, with a detector, at least a portion of the reflected light passing through the opening, wherein the surface is positioned between the detector and the tissue." Dependent Claims 16 and 20 recite that the "dark-colored coating comprises black." Applicant respectfully submits that the Office Action has failed to establish that the cited art teaches or suggests at least these features of Claims 2, 16, 17, 20, 24, and 27.

The Office Action admits that neither Fei nor Scharf, alone or in combination, disclose a dark-colored coating comprising an opening configured to allow at least a portion of light reflected from the tissue to pass through the surface. *See* Office Action, pgs. 4, 7, 9-10, and 11-12. However, the Office Action looks to White to satisfy these deficiencies. *See id.* Specifically, the Office Action asserts that the "opaque" sheet having an aperture in White meets these limitations. *See id.* Further, the Office Action appears to assert that because the "opaque" sheet ***is illustrated as black*** in FIGS. 2B and 4A of White, White discloses the limitations of Claims 16 and 20. *See* Office Action, pgs. 6, 8. Applicant respectfully disagrees.

The ordinary meaning of "opaque" is "not able to be seen through" or "not transparent." New Oxford American Dictionary, 1227 (3rd Edition 2010). While White does disclose an "opaque" sheet, White fails to disclose or suggest a "dark-colored" coating, as recited in independent Claims 2, 17, 24, and 27, let alone that the "dark-colored" coating "comprises black" as recited in dependent Claims 16 and 20. Indeed, neither of the terms "dark" or "black" appear anywhere in the White disclosure. Further, the fact FIGS. 2B and 4A of White illustrate the "opaque" sheet in black and white line drawings does not mean that White discloses, or even suggests, a "dark-colored" coating, let alone that the "dark-colored" coating "comprises black." Rather, it is merely a consequence of the requirement, per 37 C.F.R. 1.84, that drawings in a patent application be shown in black and white. For at least these reasons, Applicant respectfully submits that the Office Action has failed to establish that the cited art teaches or suggests each and every element of Claims 2, 16, 17, 20, 24, and 27.

Additionally, the Office Action has failed to establish that the cited art teaches or suggests, alone or in combination, each and every element of Claims 15, 23, and 25. Dependent Claims 15, 23, and 25 each recite "wherein the opening in the dark-colored coating comprises a width and a length, and wherein the width is larger than the length." As discussed above, the Office Action asserts that the opaque sheet having an aperture corresponds to the "dark-colored coating" and opening recited in Claims 2, 17, 24, and 27. Further, the Office Action appears to assert that the opaque sheet having an aperture of White meets the limitations of Claims 15, 23, and 25. *See* Office Action, pgs. 6, 8, 10; *see also* White, FIGS. 2A-2B, 4A-4B (see numeral "25"). However, these figures clearly show that the aperture in the opaque sheet in White is a circle. *See* White, FIGS. 2A-2B, 4A-4B; *see also* White, para. [0078] ("At the center of the aluminum sheet 25 was an aperture approximately 1 mm in ***diameter***) (emphasis added). Thus, Applicant respectfully submits that the Office Action has failed to establish that the cited art teaches or suggests each and every element of Claims 15, 23, and 25.

Despite the fact that the cited art has not been shown to teach or suggest each and every element of at least Claims 2, 15, 16, 17, 20, 23, 24, 25 and 27, Applicant has voluntarily amended the claims as shown above to further emphasize the differences between the claims and the cited art. Amended independent Claim 2 recites, among other things (emphasis added):

> a material positioned between the plurality of emitters and a tissue measurement site, ***the material configured to distribute the light emitted from one or more of the plurality of emitters to form a customized shape on a surface of the tissue measurement site;***

Amended independent Claim 17 recites, among other things (emphasis added):

> ***shaping at least a portion of the light emitted from the plurality of emitters to form a customized shape on a tissue measurement site***;

Amended independent Claim 24 recites, among other things (emphasis added):

> a material positioned between the plurality of optical sources and a tissue measurement site, ***wherein the material is configured to project a shape of at least a portion of the light emitted from one or more of the plurality of emitters toward the tissue measurement site;***

Amended independent Claim 27 recites, among other things (emphasis added):

> a material positioned between the plurality of emitters and a tissue measurement site, ***the material configured to project a shape of the light emitted from one or more of the plurality of emitters toward the tissue measurement site***;

Applicant respectfully submits that the cited art has not been shown to teach or suggest, alone or in combination, at least these limitations in combination with other limitations appearing in the claims.

Dependent Claims 3-10, 12-16, 18-21, 23, 25-26, and 28-31 depend directly or indirectly from Claims 2, 17, 24, or 27 and are thus patentably distinct from the cited art of record for at least the reasons set forth above in regard to Claims 2, 17, 24, or 27. In addition, Applicant notes that these claims, when taken in the context of Claims 2, 17, 24, or 27, set forth a number of recitations not taught, disclosed, or suggested by the cited references, alone or in combination.

Dependent Claims 32-33 were added in the present paper and our believed to be patentable over the cited art. Accordingly, Applicant respectfully requests that Claims 32-33 be indicated as allowable.

For at least these additional reasons, Applicant requests that the rejections to the pending claims be withdrawn and the claims allowed.

E. No Disclaimers or Disavowals

Although the present communication may include alterations to the application or claims, or characterizations of claim scope or referenced art, Applicant is not conceding in this application that previously pending claims are not patentable over the cited references. Rather,

any alterations or characterizations are being made to facilitate expeditious prosecution of this application. Applicant reserves the right to pursue at a later date any previously pending or other broader or narrower claims that capture any subject matter supported by the present disclosure, including subject matter found to be specifically disclaimed herein or by any prior prosecution. Accordingly, reviewers of this or any parent, child or related prosecution history shall not reasonably infer that Applicant has made any disclaimers or disavowals of any subject matter supported by the present application.

Please charge any additional fees, including any fees for additional extension of time, or credit overpayment to Deposit Account No. 11-1410.

Respectfully submitted,

KNOBBE, MARTENS, OLSON & BEAR, LLP

Dated: November 14, 2019

By: /Aaron S. Johnson/
Aaron S. Johnson
Registration No. 74,164
Registered Practitioner
Customer No. 64735
(949) 760-0404

Electronic Acknowledgement Receipt

EFS ID:	37757923
Application Number:	16532065
International Application Number:	
Confirmation Number:	1092
Title of Invention:	ADVANCED PULSE OXIMETRY SENSOR
First Named Inventor/Applicant Name:	Ammar Al-Ali
Customer Number:	64735
Filer:	Aaron Samuel Johnson/Fabiola Esmerio
Filer Authorized By:	Aaron Samuel Johnson
Attorney Docket Number:	MAS.1007C3
Receipt Date:	14-NOV-2019
Filing Date:	05-AUG-2019
Time Stamp:	20:08:35
Application Type:	Utility under 35 USC 111(a)

Payment information:

Submitted with Payment	no

File Listing:

Document Number	Document Description	File Name	File Size(Bytes)/ Message Digest	Multi Part /.zip	Pages (if appl.)
1		OAR_MAS1007C3.pdf	70313 2441d7353d19f7d8e89a61a19d50799dc22d26aa	yes	12

MASIMO 2056
Apple v. Masimo
IPR2024-00242

	Multipart Description/PDF files in .zip description		
	Document Description	**Start**	**End**
	Amendment/Req. Reconsideration-After Non-Final Reject	1	1
	Claims	2	7
	Applicant Arguments/Remarks Made in an Amendment	8	12
Warnings:			
Information:			
	Total Files Size (in bytes):	70313	

This Acknowledgement Receipt evidences receipt on the noted date by the USPTO of the indicated documents, characterized by the applicant, and including page counts, where applicable. It serves as evidence of receipt similar to a Post Card, as described in MPEP 503.

New Applications Under 35 U.S.C. 111
If a new application is being filed and the application includes the necessary components for a filing date (see 37 CFR 1.53(b)-(d) and MPEP 506), a Filing Receipt (37 CFR 1.54) will be issued in due course and the date shown on this Acknowledgement Receipt will establish the filing date of the application.
National Stage of an International Application under 35 U.S.C. 371
If a timely submission to enter the national stage of an international application is compliant with the conditions of 35 U.S.C. 371 and other applicable requirements a Form PCT/DO/EO/903 indicating acceptance of the application as a national stage submission under 35 U.S.C. 371 will be issued in addition to the Filing Receipt, in due course.
New International Application Filed with the USPTO as a Receiving Office
If a new international application is being filed and the international application includes the necessary components for an international filing date (see PCT Article 11 and MPEP 1810), a Notification of the International Application Number and of the International Filing Date (Form PCT/RO/105) will be issued in due course, subject to prescriptions concerning national security, and the date shown on this Acknowledgement Receipt will establish the international filing date of the application.

MASIMO 2056
Apple v. Masimo
IPR2024-00242

PTO/SB/06 (09-11)
Approved for use through 1/31/2014. OMB 0651-0032
U.S. Patent and Trademark Office; U.S. DEPARTMENT OF COMMERCE
Under the Paperwork Reduction Act of 1995, no persons are required to respond to a collection of information unless it displays a valid OMB control number.

PATENT APPLICATION FEE DETERMINATION RECORD Substitute for Form PTO-875	Application or Docket Number 16/532,065	Filing Date 08/05/2019	☐ To be Mailed

ENTITY: ☑ LARGE ☐ SMALL ☐ MICRO

APPLICATION AS FILED - PART I

FOR	(Column 1) NUMBER FILED	(Column 2) NUMBER EXTRA		RATE ($)	FEE ($)
☐ BASIC FEE (37 CFR 1.16(a), (b), or (c))	N/A	N/A		N/A	
☐ SEARCH FEE (37 CFR 1.16(k), (i), or (m))	N/A	N/A		N/A	
☐ EXAMINATION FEE (37 CFR 1.16(o), (p), or (q))	N/A	N/A		N/A	
TOTAL CLAIMS (37 CFR 1.16(i))	minus 20 =	*		x $100 =	
INDEPENDENT CLAIMS (37 CFR 1.16(h))	minus 3 =	*		x $460 =	
☐ APPLICATION SIZE FEE (37 CFR 1.16(s))	If the specification and drawings exceed 100 sheets of paper, the application size fee due is $310 ($155 for small entity) for each additional 50 sheets or fraction thereof. See 35 U.S.C. 41(a)(1)(G) and 37 CFR 1.16(s).				
☐ MULTIPLE DEPENDENT CLAIM PRESENT (37 CFR 1.16(j))					
* If the difference in column 1 is less than zero, enter "0" in column 2.				TOTAL	

APPLICATION AS AMENDED - PART II

AMENDMENT	01/07/2020	(Column 1) CLAIMS REMAINING AFTER AMENDMENT		(Column 2) HIGHEST NUMBER PREVIOUSLY PAID FOR	(Column 3) PRESENT EXTRA		RATE ($)	ADDITIONAL FEE ($)
	Total (37 CFR 1.16(i))	* 30	Minus	** 30	= 0		x $100 =	0
	Independent (37 CFR 1.16(h))	* 4	Minus	*** 4	= 0		x $460 =	0
	☐ Application Size Fee (37 CFR 1.16(s))							
	☐ FIRST PRESENTATION OF MULTIPLE DEPENDENT CLAIM (37 CFR 1.16(j))							
							TOTAL ADD'L FEE	0

AMENDMENT		(Column 1) CLAIMS REMAINING AFTER AMENDMENT		(Column 2) HIGHEST NUMBER PREVIOUSLY PAID FOR	(Column 3) PRESENT EXTRA		RATE ($)	ADDITIONAL FEE ($)
	Total (37 CFR 1.16(i))	*	Minus	**	=		x $0 =	
	Independent (37 CFR 1.16(h))	*	Minus	***	=		x $0 =	
	☐ Application Size Fee (37 CFR 1.16(s))							
	☐ FIRST PRESENTATION OF MULTIPLE DEPENDENT CLAIM (37 CFR 1.16(j))							
							TOTAL ADD'L FEE	

* If the entry in column 1 is less than the entry in column 2, write "0" in column 3.	SLIE
** If the "Highest Number Previously Paid For" IN THIS SPACE is less than 20, enter "20".	/Theresa OKON/
*** If the "Highest Number Previously Paid For" IN THIS SPACE is less than 3, enter "3".	
The "Highest Number Previously Paid For" (Total or Independent) is the highest number found in the appropriate box in column 1.	

This collection of information is required by 37 CFR 1.16. The information is required to obtain or retain a benefit by the public which is to file (and by the USPTO to process) an application. Confidentiality is governed by 35 U.S.C. 122 and 37 CFR 1.14. This collection is estimated to take 12 minutes to complete, including gathering, preparing, and submitting the completed application form to the USPTO. Time will vary depending upon the individual case. Any comments on the amount of time you require to complete this form and/or suggestions for reducing this burden, should be sent to the Chief Information Officer, U.S. Patent and Trademark Office, U.S. Department of Commerce, P.O. Box 1450, Alexandria, VA 22313-1450. DO NOT SEND FEES OR COMPLETED FORMS TO THIS ADDRESS. **SEND TO: Commissioner for Patents, P.O. Box 1450, Alexandria, VA 22313-1450.**

If you need assistance in completing the form, call 1-800-PTO-9199 and select option 2.

MASIMO 2056
Apple v. Masimo
IPR2024-00242

IN THE UNITED STATES PATENT AND TRADEMARK OFFICE

Inventor	:	Ammar Al-Ali
App. No.	:	16/532,065
Filed	:	August 5, 2019
For	:	PHYSIOLOGICAL MONITORING DEVICES, SYSTEMS, AND METHODS
Examiner	:	Fardanesh, Marjan
Art Unit	:	3791
Conf. No.	:	1092

SUPPLEMENTAL AMENDMENT

Mail Stop Amendment
Commissioner for Patents
P.O. Box 1450
Alexandria, VA 22313-1450

Dear Commissioner:

Applicant submits the following paper to supplement Applicant's Response submitted on November 14, 2019. Applicant respectfully requests reconsideration of the application in view of the following:

Amendments to the Claims are reflected in the listing of claims which begins on page 2 of this paper.

Summary of the Interview begins on page 8 of this paper.

Remarks begin on page 9 of this paper.

MASIMO 2056
Apple v. Masimo
IPR2024-00242

INFORMATION DISCLOSURE STATEMENT

First Inventor	:	Ammar Al-Ali
App. No.	:	16/532065
Filed	:	August 5, 2019
For	:	PHYSIOLOGICAL MONITORING DEVICES, SYSTEMS, AND METHODS
Examiner	:	Fardanesh, Marjan
Art Unit	:	3791
Conf. No.	:	1092

Mail Stop Amendment
Commissioner for Patents
P.O. Box 1450
Alexandria, VA 22313-1450

References and Listing

Pursuant to 37 CFR 1.56, an Information Disclosure Statement listing references is provided herewith. Copies of any listed foreign and non-patent literature references are being submitted. Any foreign references may also include English abstract(s) and/or machine translation(s), but no representation is made as to their accuracy.

If the Examiner would like additional information regarding these references or if anything is unclear, the Examiner is invited to contact the undersigned for assistance.

No Disclaimers

To the extent that anything in the Information Disclosure Statement or the listed references could be construed as a disclaimer of any subject matter supported by the present application, Applicant hereby rescinds and retracts such disclaimer.

Timing of Disclosure

This Information Disclosure Statement is being filed after receipt of a First Office Action, but before the mailing date of a Final Action and before the mailing date of a Notice of Allowance.

MASIMO 2056
Apple v. Masimo
IPR2024-00242

This Statement is accompanied by the fees set forth in 37 CFR 1.17(p). The Commissioner is hereby authorized to charge any additional fees which may be required or to credit any overpayment to Account No. 11-1410.

Respectfully submitted,

KNOBBE, MARTENS, OLSON & BEAR, LLP

Dated: January 7, 2020

By: /Aaron S. Johnson/
Aaron S. Johnson
Registration No. 74,164
Registered Practitioner
(949) 760-0404

31976227

MASIMO 2056
Apple v. Masimo
IPR2024-00242

Electronic Patent Application Fee Transmittal	
Application Number:	16532065
Filing Date:	05-Aug-2019
Title of Invention:	ADVANCED PULSE OXIMETRY SENSOR
First Named Inventor/Applicant Name:	Ammar Al-Ali
Filer:	Aaron Samuel Johnson/Daniel Escajeda
Attorney Docket Number:	MAS.1007C3
Filed as Large Entity	
Filing Fees for Utility under 35 USC 111(a)	

Description	Fee Code	Quantity	Amount	Sub-Total in USD($)
Basic Filing:				
Pages:				
Claims:				
Miscellaneous-Filing:				
Petition:				
Patent-Appeals-and-Interference:				
Post-Allowance-and-Post-Issuance:				
Extension-of-Time:				

MASIMO 2056
Apple v. Masimo
IPR2024-00242

Description	Fee Code	Quantity	Amount	Sub-Total in USD($)
Miscellaneous:				
SUBMISSION- INFORMATION DISCLOSURE STMT	1806	1	240	240
		Total in USD ($)		**240**

MASIMO 2056
Apple v. Masimo
IPR2024-00242

Electronic Acknowledgement Receipt	
EFS ID:	38230744
Application Number:	16532065
International Application Number:	
Confirmation Number:	1092
Title of Invention:	ADVANCED PULSE OXIMETRY SENSOR
First Named Inventor/Applicant Name:	Ammar Al-Ali
Customer Number:	64735
Filer:	Aaron Samuel Johnson/Jim Nyenhuis
Filer Authorized By:	Aaron Samuel Johnson
Attorney Docket Number:	MAS.1007C3
Receipt Date:	07-JAN-2020
Filing Date:	05-AUG-2019
Time Stamp:	19:27:48
Application Type:	Utility under 35 USC 111(a)

Payment information:

Submitted with Payment	yes
Payment Type	CARD
Payment was successfully received in RAM	$240
RAM confirmation Number	E202017J28148949
Deposit Account	111410
Authorized User	Jim Nyenhuis
The Director of the USPTO is hereby authorized to charge indicated fees and credit any overpayment as follows: 37 CFR 1.16 (National application filing, search, and examination fees) 37 CFR 1.17 (Patent application and reexamination processing fees)	

MASIMO 2056
Apple v. Masimo
IPR2024-00242

File Listing:

Document Number	Document Description	File Name	File Size(Bytes)/ Message Digest	Multi Part /.zip	Pages (if appl.)
1		SUPP-AMEND_MAS1007C3.pdf	74715 44c285730b070b0d4d25247598db9dff6ca1d6fc	yes	13

Multipart Description/PDF files in .zip description		
Document Description	**Start**	**End**
Applicant Arguments/Remarks Made in an Amendment	9	13
Applicant summary of interview with examiner	8	8
Claims	2	7
Supplemental Response or Supplemental Amendment	1	1

Warnings:

Information:

2		IDS_MAS1007C3.pdf	85540 28faf4f35b5dd677662c156402cab25058fbe4ea	yes	5

Multipart Description/PDF files in .zip description		
Document Description	**Start**	**End**
Information Disclosure Statement (IDS) Form (SB08)	3	5
Transmittal Letter	1	2

Warnings:

Information:

3	Foreign Reference	CN103906468A_wTrans.pdf	4567076 2a8177deb6c0212bb674f30d272265e5730c95b6	no	56

Warnings:

Information:

MASIMO 2056
Apple v. Masimo
IPR2024-00242

4	Foreign Reference	CN101564290B_wTrans.pdf	1443782 3bd93186af0cb5be98dc09f5a7bd5348bd2db9f5	no	19
Warnings:					
Information:					
5	Foreign Reference	CN101484065B_wTrans.pdf	5481913 b6ea3d95103da75ba5eccf61226ada2e1ee0db80	no	80
Warnings:					
Information:					
6	Foreign Reference	EP1124609B1.pdf	602652 17fa1ad43675208cdff8eeda49acfd312de09085	no	45
Warnings:					
Information:					
7	Foreign Reference	WO2006113070A2.pdf	2099988 2b3cb455e9d77130993b34323a477d2cf50cc918	no	33
Warnings:					
Information:					
8	Foreign Reference	WO2009001988A1.pdf	1577301 019d0b5b177b0435d8bc4dbe90e93a5589fbf389	no	24
Warnings:					
Information:					
9	Foreign Reference	WO2009137524A2.pdf	4737376 f9d2fead096dfd180e0f5bd6353b657894eb55bd	no	62
Warnings:					
Information:					
10	Foreign Reference	WO2011069122A1.pdf	821984 b0cab3957523c3503a24f2e1010ee7b0ce8f1865	no	95
Warnings:					
Information:					

11	Foreign Reference	WO2013181368A1.pdf	402261 9b826e558bf03f18aea24ec35ea2b54345399343	no	40
Warnings:					
Information:					
12	Foreign Reference	WO2014178793A1.pdf	286455 0bc3bb2aa17f47c6a0146dbd10c949d12e6ec720	no	28
Warnings:					
Information:					
13	Foreign Reference	WO2016066312A1.pdf	492874 c5be8c0996e22df14085965d6b31fcc50f650bff	no	36
Warnings:					
Information:					
14	Non Patent Literature	37-HeartRate_Measurement-Technology.PDF	404634 338bfe8956ef822be2052f81724d1e3dd774670d	no	6
Warnings:					
Information:					
15	Non Patent Literature	38_Intro.pdf	2227969 286998444dcdcacf78c0f7852f92576bc018a4f0	no	37
Warnings:					
Information:					
16	Non Patent Literature	39-PerformTek_Precision_Biometrics.PDF	1511202 5d6c9fc70fe8b784f4107cb511257104cf812180	no	13
Warnings:					
Information:					
17	Non Patent Literature	40-Galaxy_S5_Explained.pdf	395113 04d9d39a7f8f4b769a7d8a8832bfc87e5550ae08	no	5
Warnings:					
Information:					

18	Non Patent Literature	41-Withings_Pulse.pdf	5077818 a7c96dcd0a09e9aa429d8a8f213a22a2c2ca54c6	no	43
Warnings:					
Information:					
19	Non Patent Literature	Faulkner_2015.pdf	1615824 cf705ec547c8364856df36f08be7bf2fb67707d5	no	21
Warnings:					
Information:					
20	Non Patent Literature	Hayes_2014.pdf	1224702 f74180be7a43e206aa9bcf1a8dccd8c2656d99e2	no	24
Warnings:					
Information:					
21	Non Patent Literature	Heerlein_2014.PDF	939381 ad9385e625dd8f0aa136e37a3c8f0ab833b9a3b1	no	6
Warnings:					
Information:					
22	Non Patent Literature	Kilbane_2015.PDF	376030 b45be84435516a098ba31c273b03b5dc11fd7a57	no	5
Warnings:					
Information:					
23	Non Patent Literature	Kviesis_2012.PDF	3095965 1fef3c7a4365f4ec9ba2a4a2415ce45f87db6d82	no	6
Warnings:					
Information:					
24	Fee Worksheet (SB06)	fee-info.pdf	30650 c0fc3c31e44a86b48888026a429a44876f2538f1e	no	2
Warnings:					
Information:					
			Total Files Size (in bytes):	39573205	

MASIMO 2056
Apple v. Masimo
IPR2024-00242

This Acknowledgement Receipt evidences receipt on the noted date by the USPTO of the indicated documents, characterized by the applicant, and including page counts, where applicable. It serves as evidence of receipt similar to a Post Card, as described in MPEP 503.

New Applications Under 35 U.S.C. 111
If a new application is being filed and the application includes the necessary components for a filing date (see 37 CFR 1.53(b)-(d) and MPEP 506), a Filing Receipt (37 CFR 1.54) will be issued in due course and the date shown on this Acknowledgement Receipt will establish the filing date of the application.
National Stage of an International Application under 35 U.S.C. 371
If a timely submission to enter the national stage of an international application is compliant with the conditions of 35 U.S.C. 371 and other applicable requirements a Form PCT/DO/EO/903 indicating acceptance of the application as a national stage submission under 35 U.S.C. 371 will be issued in addition to the Filing Receipt, in due course.
New International Application Filed with the USPTO as a Receiving Office
If a new international application is being filed and the international application includes the necessary components for an international filing date (see PCT Article 11 and MPEP 1810), a Notification of the International Application Number and of the International Filing Date (Form PCT/RO/105) will be issued in due course, subject to prescriptions concerning national security, and the date shown on this Acknowledgement Receipt will establish the international filing date of the application.

MASIMO 2056
Apple v. Masimo
IPR2024-00242

REMARKS

This paper supplements Applicant's Response submitted on November 14, 2019 and is responsive to the Non-Final Office Action dated October 21, 2019. Applicant has voluntarily amended the claims as shown above in light of the discussion during the Interview with Examiner Fardanesh to further clarify the differences between the present claims and the cited art of record. Despite such voluntary amendments, Applicant reserves the right to pursue any previously pending or other broader or narrower claims that capture any subject matter supported by the present disclosure.

By way of summary, Claims 2-31 were pending prior to the submission of this paper. Claims 2, 17, 18, 21, 24, 26-27, and 31 have been amended and Claims 11 and 22 have been cancelled without prejudice or disclaimer. Claims 32-33 have been added as new. Thus, Claims 2-10, 12-21, and 23-33 are pending. Applicant respectfully requests reconsideration of the pending claims in light of the present response.

A. Double Patenting

The Office Action provisionally rejected Claims 2-31 on the ground of nonstatutory double patenting as being allegedly unpatentable over Claims 2-31 of copending U.S. Patent App. No. 16/532,061. *See* Office Action, pgs. 20-22. Applicant respectfully requests that these rejections be held in abeyance until the claims of the present application are in condition for allowance.

B. Claim Objections

The Office Action objected to Claim 18 because of an informality and suggested removal of the term "of" in line 3. *See* Office Action, pg. 2. Applicant has amended Claim 18 as shown above and believes this objection is thereby rendered moot.

C. Claim Rejections Under 35 U.S.C. § 112

The Office Action rejected Claim 17 under 35 U.S.C. § 112 as being indefinite for failing to particularly point out and distinctly claim the subject matter which the inventor or a joint inventor (or for pre-AIA, the applicant) regards as the invention. *See id.* at 2-3. More specifically, the Office Action alleged that there is insufficient antecedent basis for the phrase "the plurality of

MASIMO 2056
Apple v. Masimo
IPR2024-00242

detectors" in Claim 17. *See id.* Applicant traverses this rejection. However, in the interest of progressing prosecution, Applicant has amended Claim 17 without disclaimer as shown above and believes this rejection is thereby rendered moot. Applicant reserves the right to pursue the claim as previously presented in one or more continuation applications.

D. <u>The Pending Claims Are Patentable over the Cited Art</u>

Claims 2-6, 8-12, 15-17, and 19-31 stand rejected under 35 U.S.C. § 103 as being unpatentable over U.S. Patent Pub. No. 2014/0361147 to Fei ("Fei") in view of U.S. Patent Pub. No. 2013/0204112 to White et al. ("White"). Claim 13 stands rejected under 35 U.S.C. § 103 as being unpatentable over Fei in view of White and U.S. Patent Pub. No. 2006/0182659 to Unlu et al. ("Unlu"). Claims 2-4, 6-8, 10-12, and 14-18 stand rejected under 35 U.S.C. § 103 as being unpatentable over U.S. Patent No. 5,830,137 to Scharf ("Scharf") in view of Fei and White. Claim 13 stands rejected under 35 U.S.C. § 103 as being unpatentable over Scharf in view of Fei, White, and Unlu. Claims 17-23 stand rejected under 35 U.S.C. § 103 as being unpatentable over Scharf in view of White. Applicant respectfully traverses these rejections and requests that the rejections of the pending claims be withdrawn for at least the following reasons.

Independent Claims 2, 24, and 27 recite, among other things, "a surface comprising a dark-colored coating, the surface positioned between the plurality of detectors and the tissue, the dark-colored coating comprising an opening configured to allow at least a portion of light reflected from the tissue to pass through the surface." Independent Claim 17 recites, among other things, "permitting light reflected from tissue of the user to pass through an opening in a dark-colored coating on a surface and detecting, with a detector, at least a portion of the reflected light passing through the opening, wherein the surface is positioned between the detector and the tissue." Dependent Claims 16 and 20 recite that the "dark-colored coating comprises black." Applicant respectfully submits that the Office Action has failed to establish that the cited art teaches or suggests at least these features of Claims 2, 16, 17, 20, 24, and 27.

The Office Action admits that neither Fei nor Scharf, alone or in combination, disclose a dark-colored coating comprising an opening configured to allow at least a portion of light reflected from the tissue to pass through the surface. *See* Office Action, pgs. 4, 7, 9-10, and 11-12. However, the Office Action looks to White to satisfy these deficiencies. *See id.* Specifically, the Office Action asserts that the "opaque" sheet having an aperture in White meets these

limitations. *See id.* Further, the Office Action appears to assert that because the "opaque" sheet ***is illustrated as black*** in FIGS. 2B and 4A of White, White discloses the limitations of Claims 16 and 20. *See* Office Action, pgs. 6, 8. Applicant respectfully disagrees.

The ordinary meaning of "opaque" is "not able to be seen through" or "not transparent." New Oxford American Dictionary, 1227 (3rd Edition 2010). While White does disclose an "opaque" sheet, White fails to disclose or suggest a "dark-colored" coating, as recited in independent Claims 2, 17, 24, and 27, let alone that the "dark-colored" coating "comprises black" as recited in dependent Claims 16 and 20. Indeed, neither of the terms "dark" or "black" appear anywhere in the White disclosure. Further, the fact FIGS. 2B and 4A of White illustrate the "opaque" sheet in black and white line drawings does not mean that White discloses, or even suggests, a "dark-colored" coating, let alone that the "dark-colored" coating "comprises black." Rather, it is merely a consequence of the requirement, per 37 C.F.R. 1.84, that drawings in a patent application be shown in black and white. For at least these reasons, Applicant respectfully submits that the Office Action has failed to establish that the cited art teaches or suggests each and every element of Claims 2, 16, 17, 20, 24, and 27.

Additionally, the Office Action has failed to establish that the cited art teaches or suggests, alone or in combination, each and every element of Claims 15, 23, and 25. Dependent Claims 15, 23, and 25 each recite "wherein the opening in the dark-colored coating comprises a width and a length, and wherein the width is larger than the length." As discussed above, the Office Action asserts that the opaque sheet having an aperture corresponds to the "dark-colored coating" and opening recited in Claims 2, 17, 24, and 27. Further, the Office Action appears to assert that the opaque sheet having an aperture of White meets the limitations of Claims 15, 23, and 25. *See* Office Action, pgs. 6, 8, 10; *see also* White, FIGS. 2A-2B, 4A-4B (see numeral "25"). However, these figures clearly show that the aperture in the opaque sheet in White is a circle. *See* White, FIGS. 2A-2B, 4A-4B; *see also* White, para. [0078] ("At the center of the aluminum sheet 25 was an aperture approximately 1 mm in ***diameter***) (emphasis added). Thus, Applicant respectfully submits that the Office Action has failed to establish that the cited art teaches or suggests each and every element of Claims 15, 23, and 25.

Despite the fact that the cited art has not been shown to teach or suggest each and every element of at least Claims 2, 15, 16, 17, 20, 23, 24, 25 and 27, Applicant has voluntarily

amended the claims as shown above to further emphasize the differences between the claims and the cited art. Amended independent Claim 2 recites, among other things (emphasis added):

> a material positioned between the plurality of emitters and a tissue measurement site, ***the material configured to alter a shape by which the light emitted from one or more of the plurality of emitters is distributed onto a surface of the tissue measurement site***;

Amended independent Claim 17 recites, among other things (emphasis added):

> ***shaping at least a portion of the light emitted from the plurality of emitters before the light reaches a tissue measurement site to define a surface area shape on the tissue measurement site***;

Amended independent Claim 24 recites, among other things (emphasis added):

> a material positioned between the plurality of optical sources and a tissue measurement site, ***wherein the material is configured to alter a shape by which at least a portion of the light emitted from one or more of the plurality of emitters is distributed on the tissue measurement site***;

Amended independent Claim 27 recites, among other things (emphasis added):

> a material positioned between the plurality of emitters and a tissue measurement site, ***the material configured to alter a shape by which the light emitted from one or more of the plurality of emitters is distributed on the tissue measurement site***;

Applicant respectfully submits that the cited art has not been shown to teach or suggest, alone or in combination, at least these limitations in combination with other limitations appearing in the claims.

Dependent Claims 3-10, 12-16, 18-21, 23, 25-26, and 28-31 depend directly or indirectly from Claims 2, 17, 24, or 27 and are thus patentably distinct from the cited art of record for at least the reasons set forth above in regard to Claims 2, 17, 24, or 27. In addition, Applicant notes that these claims, when taken in the context of Claims 2, 17, 24, or 27, set forth a number of recitations not taught, disclosed, or suggested by the cited references, alone or in combination.

Dependent Claims 32-33 were added in the present paper and our believed to be patentable over the cited art. Accordingly, Applicant respectfully requests that Claims 32-33 be indicated as allowable.

For at least these additional reasons, Applicant requests that the rejections to the pending claims be withdrawn and the claims allowed.

E. No Disclaimers or Disavowals

Although the present communication may include alterations to the application or claims, or characterizations of claim scope or referenced art, Applicant is not conceding in this application that previously pending claims are not patentable over the cited references. Rather, any alterations or characterizations are being made to facilitate expeditious prosecution of this application. Applicant reserves the right to pursue at a later date any previously pending or other broader or narrower claims that capture any subject matter supported by the present disclosure, including subject matter found to be specifically disclaimed herein or by any prior prosecution. Accordingly, reviewers of this or any parent, child or related prosecution history shall not reasonably infer that Applicant has made any disclaimers or disavowals of any subject matter supported by the present application.

Please charge any additional fees, including any fees for additional extension of time, or credit overpayment to Deposit Account No. 11-1410.

Respectfully submitted,

KNOBBE, MARTENS, OLSON & BEAR, LLP

Dated: January 7, 2020

By: /Aaron S. Johnson/
Aaron S. Johnson
Registration No. 74,164
Registered Practitioner
Customer No. 64735
(949) 760-0404

SUMMARY OF INTERVIEW

Applicant thanks Examiner Fardanesh for discussing the present application with Applicant's representatives Jarom D. Kesler (Reg. No. 57,046) and Aaron S. Johnson (Reg. No. 74,164) during an interview on December 3, 2019 ("Interview"). During the Interview, Applicant's representatives and Examiner Fardanesh discussed the differences between the pending claims and the cited art of record and further discussed the claim amendments as presented in Applicant's Response submitted on November 14, 2019. While no agreement was reached, Applicant's representatives and Examiner Fardanesh discussed the possibility of amending the claims to further clarify the differences with the cited art of record.

MASIMO 2056
Apple v. Masimo
IPR2024-00242

AMENDMENTS TO THE CLAIMS

A complete listing of all claims is presented below. ***Amendments to the version of the claims as of the date of mailing of the October 21, 2019 Non-Final Office Action*** are shown below, where insertions are underlined (e.g., insertion), and deletions are struck through or in double brackets (e.g., ~~deletion~~ or [[deletion]]).

1. **(Cancelled)**
2. **(Currently Amended)** A physiological monitoring device comprising:

a plurality of emitters, wherein each of the plurality of emitters is configured to emit light proximate a wrist of a user;

a material positioned between the plurality of emitters and a[[the]] tissue measurement site, the material configured to alter a shape [[of]]by which the light emitted from one or more of the plurality of emitters is distributed onto a surface of~~before the light reaches~~ the tissue measurement site;

a plurality of detectors configured to detect the light after attenuation by tissue, the plurality of detectors further configured to output at least one signal responsive to the detected light;

a surface comprising a dark-colored coating, the surface positioned between the plurality of detectors and the tissue, the dark-colored coating comprising an opening configured to allow at least a portion of light reflected from the tissue to pass through the surface;

a light block between the plurality of emitters and the plurality of detectors and configured to prevent at least a portion of the light emitted from the plurality of emitters from reaching the plurality of detectors without first reaching the tissue; and

a processor configured to receive and process one or more signals responsive to the at least one outputted signal and determine a physiological parameter of the user responsive to the one or more signals.

3. **(Previously Presented)** The physiological monitoring device of Claim 2, wherein the material is configured to change an output intensity profile of the light.

4. **(Previously Presented)** The physiological monitoring device of Claim 2, further comprising a display configured to present visual feedback responsive to the determined physiological parameter.

5. **(Previously Presented)** The physiological monitoring device of Claim 4, wherein the display is a touch-screen display.

6. **(Previously Presented)** The physiological monitoring device of Claim 2, wherein the plurality of emitters and the plurality of detectors are arranged in a reflectance measurement configuration.

7. **(Previously Presented)** The physiological monitoring device of Claim 2, wherein the light block comprises an at least partially circular shape, and wherein the plurality of emitters are positioned outside the light block and the plurality of detectors are positioned inside the light block.

8. **(Previously Presented)** The physiological monitoring device of Claim 2, wherein the physiological parameter comprises pulse rate.

9. **(Previously Presented)** The physiological monitoring device of Claim 2, wherein the material comprises plastic.

10. **(Previously Presented)** The physiological monitoring device of Claim 2, wherein the material comprises glass.

11. **(Cancelled)**

12. **(Previously Presented)** The physiological monitoring device of Claim 2, wherein an amount of light transmitted by the material to the tissue measurement site is greater than 90% of the light emitted by the plurality of emitters.

13. **(Previously Presented)** The physiological monitoring device of Claim 2, wherein the light emitted from the one or more of the plurality of emitters comprises a Gausian intensity profile after interaction with the material.

14. **(Previously Presented)** The physiological monitoring device of Claim 2, wherein the altered shape of the light after interaction with the material comprises a circular geometry.

15. **(Previously Presented)** The physiological monitoring device of Claim 2, wherein the opening in the dark-colored coating comprises a width and a length, and wherein the width is larger than the length.

16. **(Previously Presented)** The physiological monitoring device of Claim 2, wherein the dark-colored coating comprises black.

17. **(Currently Amended)** A method of measuring a physiological parameter, the method comprising:

emitting, from a plurality of emitters, light proximate a wrist of a user;

shaping at least a portion of the light emitted from the plurality of emitters before the light reaches [[the]]a tissue measurement site to define a surface area shape on the tissue measurement site;

permitting light reflected from tissue of the user to pass through an opening in a dark-colored coating on a surface and detecting, with a detector, at least a portion of the reflected light passing through the opening, wherein the surface is positioned between the detector and the tissue;

preventing at least a portion of the light emitted from the plurality of emitters from reaching the ~~plurality of~~ detector[[s]] without first reaching the tissue with a light block positioned between the plurality of emitters and the detector;

outputting, from the detector, at least one signal responsive to the detected light; and

electronically processing one or more signals responsive to the outputted at least one signal to determine a physiological parameter.

18. **(Currently Amended)** The method of Claim 17, wherein the light block comprises an at least partially circular shape, and wherein the plurality of emitters are positioned outside the light block and the [[of]]detector is positioned inside the light block.

19. **(Previously Presented)** The method of Claim 17, further comprising presenting, with a display, visual feedback responsive to the determined physiological parameter.

20. **(Previously Presented)** The method of Claim 17, wherein the dark-colored coating comprises black.

21. **(Currently Amended)** The method of Claim 17, wherein the step of shaping the at least the portion of the light emitted from the plurality of emitters is performed with a material comprising at least one of glass [[or]]and plastic.

22. **(Cancelled)**

23. **(Previously Presented)** The method of Claim 17, wherein the opening in the dark-colored coating comprises a width and a length, and wherein the width is larger than the length.

24. **(Currently Amended)** A physiological monitoring device comprising:

a plurality of optical sources configured to emit light proximate a wrist of a user;

a material positioned between the plurality of optical sources and a tissue measurement site, wherein the material is configured to alter a shape by which at least a portion of the light emitted from one or more of the plurality of emitters is distributed on~~before the light reaches~~ the tissue measurement site;

a plurality of detectors configured to detect the light after attenuation by tissue, the plurality of detectors further configured to output at least one signal responsive to the detected light, wherein the plurality of optical sources and the plurality of detectors are arranged in a reflectance measurement configuration;

a surface comprising a dark-colored coating, the surface positioned between the plurality of detectors and the tissue, the dark-colored coating comprising an opening configured to allow at least a portion of light reflected from the tissue to pass through the surface;

a light block between the plurality of optical sources and the plurality of detectors and configured to prevent at least a portion of light emitted from the plurality of optical sources from reaching the plurality of detectors without first reaching the tissue;

a processor configured to receive and process one or more signals responsive to the at least one outputted signal and determine a physiological parameter of the user responsive to the one or more signals; and

a touch-screen display configured to present visual feedback responsive to the determined physiological parameter;

wherein the physiological monitoring device is configured to wirelessly transmit physiological parameter data to a separate device.

25. **(Previously Presented)** The physiological monitoring device of Claim 24, wherein the opening in the dark-colored coating comprises a width and a length, and wherein the width is larger than the length.

26. **(Currently Amended)** The physiological monitoring device of Claim 24, wherein the material comprises at least one of glass [[or]]and plastic.

27. **(Currently Amended)** A system configured to measure one or more physiological parameters of a user, the system comprising:

a physiological monitoring device comprising:

a plurality of emitters configured to emit light proximate a wrist of a user;

a material positioned between the plurality of emitters and a tissue measurement site, the material configured to alter a shape [[of]]by which the light emitted from one or more of the plurality of emitters is distributed on~~before the light reaches~~ the tissue measurement site;

a plurality of detectors configured to detect the light after attenuation by tissue, the plurality of detectors further configured to output at least one signal responsive to the detected light;

a surface comprising a dark-colored coating, the surface positioned between the plurality of detectors and the tissue, the dark-colored coating comprising an opening configured to allow at least a portion of light reflected from the tissue to pass through the surface;

a light block between the plurality of emitters and the plurality of detectors and configured to prevent at least a portion of light from the plurality of emitters from reaching the plurality of detectors without first reaching the tissue; and

a processor configured to receive and process one or more signals responsive to the outputted at least one signal and determine a physiological parameter of the user responsive to the one or more signals; and

a processing device configured to wirelessly receive physiological parameter data from the physiological monitoring device, wherein the processing device comprises a user interface, a storage device, and a network interface configured to wirelessly communicate with the physiological monitoring device, and wherein the user interface includes a touch-screen display configured to present visual feedback responsive to the physiological parameter data.

28. **(Previously Presented)** The system of Claim 27, wherein the system is configured to determine a state of wellness of the user based on the determined physiological parameter.

29. **(Previously Presented)** The system of Claim 27, wherein the system is configured to determine a trend of wellness of the user based on the determined physiological parameter.

30. **(Previously Presented)** The system of Claim 27, wherein the visual feedback presented by the touch-screen display is responsive to a pulse rate of the user.

31. **(Currently Amended)** The system of Claim 27, wherein the material comprises at least one of glass [[or]]<u>and</u> plastic.

32. **(New)** The system of Claim 27, wherein the altered shape comprises a width and a length, and wherein the width is different from the length.

33. **(New)** The physiological monitoring device of Claim 24, wherein the altered shape comprises a width and a length, and wherein the width is different from the length.

INFORMATION DISCLOSURE STATEMENT

First Inventor	:	Ammar Al-Ali
App. No.	:	16/532065
Filed	:	August 5, 2019
For	:	PHYSIOLOGICAL MONITORING DEVICES, SYSTEMS, AND METHODS
Examiner	:	Fardanesh, Marjan
Art Unit	:	3791
Conf. No.	:	1092

Commissioner for Patents
P.O. Box 1450
Alexandria, VA 22313-1450

References and Listing

Pursuant to 37 CFR 1.56, an Information Disclosure Statement listing references is provided herewith. Copies of any listed foreign and non-patent literature references are being submitted.

Pursuant to 37 CFR 1.97(g) and (h), Applicant makes no representation that the information is considered to be material to patentability. Additionally, inclusion on this list is not an admission that any of the cited documents are prior art in this application. Further, Applicant makes no representation regarding the completeness of this list, or that better art does not exist.

Related Proceedings

Pursuant to M.P.E.P § 2001.06(c), Applicant provides this notification of related litigation proceedings. On January 9, 2020, Applicant, Masimo Corporation, and Cercacor Laboratories, Inc., filed a complaint in the United States Court for the Central District of California (Case No. 8:20-cv-00048) against Apple Inc.. The complaint alleges infringement of U.S. Patent Nos. 10,258,265; 10,258,266; 10,292,628; 10,299,708; 10,376,190; 10,376,191; 10,470,695; 6,771,994; 8,457,703; and 10,433,776. At least U.S. Patent No. 10,470,695 shares a common priority claim with the present application. A copy of the complaint in the proceeding is being submitted herewith.

MASIMO 2056
Apple v. Masimo
IPR2024-00242

For convenience in reviewing this submission, the following chart is provided showing the pending applications which share at least one common priority claim with each of the asserted patents.

Patent No.	**Pending Family Members**
10,258,265 10,258,266 10,292,628 10,299,708 10,376,190 10,376,191	16/449143 16/534956 16/534949 16/541987 16/544713 16/544755 16/594980 16/725478 16/725292
10,470,695	16/532061 16/532065
6,771,994	
8,457,703 10,433,776	15/820082 16/174130

No Disclaimers

To the extent that anything in the Information Disclosure Statement or the listed references could be construed as a disclaimer of any subject matter supported by the present application, Applicant hereby rescinds and retracts such disclaimer.

Timing of Disclosure

This Information Disclosure Statement is being filed after receipt of a First Office Action, but before the mailing date of a Final Action and before the mailing date of a Notice of Allowance.

This Statement is accompanied by the fees set forth in 37 CFR 1.17(p). The Commissioner is hereby authorized to charge any additional fees which may be required or to credit any overpayment to Account No. 11-1410.

Respectfully submitted,

KNOBBE, MARTENS, OLSON & BEAR, LLP

Dated: January 15, 2020

By: /Aaron S. Johnson/
Aaron S. Johnson
Registration No. 74,164
Registered Practitioner
(949) 760-0404

32027657

MASIMO 2056
Apple v. Masimo
IPR2024-00242

IN THE UNITED STATES PATENT AND TRADEMARK OFFICE

Inventor	:	Ammar Al-Ali
App. No.	:	16/532,065
Filed	:	August 5, 2019
For	:	PHYSIOLOGICAL MONITORING DEVICES, SYSTEMS, AND METHODS
Examiner	:	Fardanesh, Marjan
Art Unit	:	3791
Conf. No.	:	1092

SUPPLEMENTAL AMENDMENT

Mail Stop Amendment
Commissioner for Patents
P.O. Box 1450
Alexandria, VA 22313-1450

Dear Commissioner:

Applicant submits the following paper to supplement Applicant's Response submitted on November 14, 2019 and Applicant's Supplement Amendment submitted on January 7, 2020, which were responsive to the Non-Final Office Action dated October 21, 2019. Applicant respectfully requests reconsideration of the application in view of the following:

Amendments to the Claims are reflected in the listing of claims which begins on page 2 of this paper;

Summary of the Interview begins on page 8 of this paper; and

Remarks begin on page 9 of this paper.

MASIMO 2056
Apple v. Masimo
IPR2024-00242

AMENDMENTS TO THE CLAIMS

A complete listing of all claims is presented below. ***Amendments to the version of the claims as of the date of mailing of the October 21, 2019 Non-Final Office Action*** are shown below, where insertions are underlined (e.g., insertion), and deletions are struck through or in double brackets (e.g., ~~deletion~~ or [[deletion]]).

1. **(Cancelled)**
2. **(Currently Amended)** A physiological monitoring device comprising:

a plurality of emitters, wherein each of the plurality of emitters is configured to emit light proximate a wrist of a user;

a material positioned between the plurality of emitters and a[[the]] tissue measurement site, the material configured to alter a shape [[of]]by which the light emitted from one or more of the plurality of emitters is distributed onto a surface of~~before the light reaches~~ the tissue measurement site;

a plurality of detectors configured to detect the light after attenuation by tissue, the plurality of detectors further configured to output at least one signal responsive to the detected light;

a surface comprising a dark-colored coating, the surface positioned between the plurality of detectors and the tissue, ~~the dark-colored coating comprising~~ wherein an opening defined in the dark-colored coating is configured to allow at least a portion of light reflected from the tissue to pass through the surface;

a light block between the plurality of emitters and the plurality of detectors and configured to prevent at least a portion of the light emitted from the plurality of emitters from reaching the plurality of detectors without first reaching the tissue; and

a processor configured to receive and process one or more signals responsive to the at least one outputted signal and determine a physiological parameter of the user responsive to the one or more signals.

3. **(Previously Presented)** The physiological monitoring device of Claim 2, wherein the material is configured to change an output intensity profile of the light.

4. **(Previously Presented)** The physiological monitoring device of Claim 2, further comprising a display configured to present visual feedback responsive to the determined physiological parameter.

5. **(Previously Presented)** The physiological monitoring device of Claim 4, wherein the display is a touch-screen display.

6. **(Previously Presented)** The physiological monitoring device of Claim 2, wherein the plurality of emitters and the plurality of detectors are arranged in a reflectance measurement configuration.

7. **(Previously Presented)** The physiological monitoring device of Claim 2, wherein the light block comprises an at least partially circular shape, and wherein the plurality of emitters are positioned outside the light block and the plurality of detectors are positioned inside the light block.

8. **(Previously Presented)** The physiological monitoring device of Claim 2, wherein the physiological parameter comprises pulse rate.

9. **(Previously Presented)** The physiological monitoring device of Claim 2, wherein the material comprises plastic.

10. **(Previously Presented)** The physiological monitoring device of Claim 2, wherein the material comprises glass.

11. **(Cancelled)**

12. **(Previously Presented)** The physiological monitoring device of Claim 2, wherein an amount of light transmitted by the material to the tissue measurement site is greater than 90% of the light emitted by the plurality of emitters.

13. **(Previously Presented)** The physiological monitoring device of Claim 2, wherein the light emitted from the one or more of the plurality of emitters comprises a Gausian intensity profile after interaction with the material.

14. **(Previously Presented)** The physiological monitoring device of Claim 2, wherein the altered shape of the light after interaction with the material comprises a circular geometry.

15. **(Currently Amended)** The physiological monitoring device of Claim 2, wherein the opening <u>defined</u> in the dark-colored coating comprises a width and a length, and wherein the width is larger than the length.

16. **(Previously Presented)** The physiological monitoring device of Claim 2, wherein the dark-colored coating comprises black.

17. **(Currently Amended)** A method of measuring a physiological parameter, the method comprising:

emitting, from a plurality of emitters, light proximate a wrist of a user;

shaping at least a portion of the light emitted from the plurality of emitters before the light reaches [[the]]a tissue measurement site to define a surface area shape on the tissue measurement site;

permitting light reflected from tissue of the user to pass through an opening in a dark-colored coating on a surface and detecting, with a detector, at least a portion of the reflected light passing through the opening, wherein the surface is positioned between the detector and the tissue;

preventing at least a portion of the light emitted from the plurality of emitters from reaching the ~~plurality of~~ detector[[s]] without first reaching the tissue with a light block positioned between the plurality of emitters and the detector;

outputting, from the detector, at least one signal responsive to the detected light; and

electronically processing one or more signals responsive to the outputted at least one signal to determine a physiological parameter.

18. **(Currently Amended)** The method of Claim 17, wherein the light block comprises an at least partially circular shape, and wherein the plurality of emitters are positioned outside the light block and the [[of]]detector is positioned inside the light block.

19. **(Previously Presented)** The method of Claim 17, further comprising presenting, with a display, visual feedback responsive to the determined physiological parameter.

20. **(Previously Presented)** The method of Claim 17, wherein the dark-colored coating comprises black.

21. **(Currently Amended)** The method of Claim 17, wherein the step of shaping the at least the portion of the light emitted from the plurality of emitters is performed with a material comprising at least one of glass [[or]]and plastic.

22. **(Cancelled)**

MASIMO 2056
Apple v. Masimo
IPR2024-00242

23. **(Previously Presented)** The method of Claim 17, wherein the opening in the dark-colored coating comprises a width and a length, and wherein the width is larger than the length.

24. **(Currently Amended)** A physiological monitoring device comprising:

a plurality of optical sources configured to emit light proximate a wrist of a user;

a material positioned between the plurality of optical sources and a tissue measurement site, wherein the material is configured to alter a shape by which at least a portion of the light emitted from one or more of the plurality of emitters is distributed on~~before the light reaches~~ the tissue measurement site;

a light block having a circular shape;

a plurality of detectors configured to detect the light after ~~attenuation~~ the light passes through a portion of the tissue measurement site bounded by the light block~~by tissue~~, wherein the plurality of detectors are arranged in an array having a spatial configuration corresponding to a shape of the portion of the tissue measurement site bounded by the circular shaped light block, wherein the plurality of detectors are further configured to output at least one signal responsive to the detected light, and wherein the plurality of optical sources and the plurality of detectors are arranged in a reflectance measurement configuration;

~~a surface comprising a dark-colored coating, the surface positioned between the plurality of detectors and the tissue, the dark-colored coating comprising an opening configured to allow at least a portion of light reflected from the tissue to pass through the surface;~~

wherein[[a]] the light block is positioned between the plurality of optical sources and the plurality of detectors and configured to prevent at least a portion of light emitted from the plurality of optical sources from reaching the plurality of detectors without first reaching the tissue;

a processor configured to receive and process one or more signals responsive to the at least one outputted signal and determine a physiological parameter of the user responsive to the one or more signals; and

~~a touch screen display configured to present visual feedback responsive to the determined physiological parameter;~~

wherein the physiological monitoring device is configured to ~~wirelessly~~ transmit physiological parameter data to a separate ~~device~~processor.

25. **(Cancelled)**

26. **(Currently Amended)** The physiological monitoring device of Claim 24, wherein the material comprises at least one of glass [[or]]and plastic.

27. **(Currently Amended)** A system configured to measure one or more physiological parameters of a user, the system comprising:

a physiological monitoring device comprising:

a plurality of emitters configured to emit light proximate a wrist of a user;

a material positioned between the plurality of emitters and a tissue measurement site, the material configured to alter a shape [[of]]by which the light emitted from one or more of the plurality of emitters is distributed on~~before the light reaches~~ the tissue measurement site;

a plurality of detectors configured to detect the light after attenuation by tissue, the plurality of detectors further configured to output at least one signal responsive to the detected light;

a surface comprising a dark-colored coating, the surface positioned between the plurality of detectors and the tissue, ~~the dark-colored coating comprising~~wherein an opening defined in the dark-colored coating is configured to allow at least a portion of light reflected from the tissue to pass through the surface;

a light block between the plurality of emitters and the plurality of detectors and configured to prevent at least a portion of light from the plurality of emitters from reaching the plurality of detectors without first reaching the tissue; and

a processor configured to receive and process one or more signals responsive to the outputted at least one signal and determine a physiological parameter of the user responsive to the one or more signals; and

a processing device configured to wirelessly receive physiological parameter data from the physiological monitoring device, wherein the processing device comprises a user interface, a

MASIMO 2056
Apple v. Masimo
IPR2024-00242

storage device, and a network interface configured to wirelessly communicate with the physiological monitoring device, and wherein the user interface includes a touch-screen display configured to present visual feedback responsive to the physiological parameter data.

28. **(Previously Presented)** The system of Claim 27, wherein the system is configured to determine a state of wellness of the user based on the determined physiological parameter.

29. **(Previously Presented)** The system of Claim 27, wherein the system is configured to determine a trend of wellness of the user based on the determined physiological parameter.

30. **(Previously Presented)** The system of Claim 27, wherein the visual feedback presented by the touch-screen display is responsive to a pulse rate of the user.

31. **(Currently Amended)** The system of Claim 27, wherein the material comprises at least one of glass [[or]]<u>and</u> plastic.

32. **(New)** The system of Claim 27, wherein the altered shape comprises a width and a length, and wherein the width is different from the length.

33. **(New)** The physiological monitoring device of Claim 24, wherein the altered shape comprises a width and a length, and wherein the width is different from the length.

SUMMARY OF INTERVIEW

Applicant thanks Examiner Fardanesh for discussing the present application with Applicant's representatives Jarom D. Kesler (Reg. No. 57,046) and Aaron S. Johnson (Reg. No. 74,164) during an interview on December 3, 2019 ("Interview"). During the Interview, Applicant's representatives and Examiner Fardanesh discussed the differences between the pending claims and the cited art of record and further discussed the claim amendments as presented in Applicant's Response submitted on November 14, 2019. While no agreement was reached, Applicant's representatives and Examiner Fardanesh discussed the possibility of amending the claims to further clarify the differences with the cited art of record.

REMARKS

This paper supplements Applicant's Response submitted on November 14, 2019 and Applicant's Supplemental Amendment submitted on January 7, 2020, which were responsive to the Non-Final Office Action dated October 21, 2019. Applicant has voluntarily amended the claims as shown above in light of the discussion during the Interview with Examiner Fardanesh to further clarify the differences between the present claims and the cited art of record. Despite such voluntary amendments, Applicant reserves the right to pursue any previously pending or other broader or narrower claims that capture any subject matter supported by the present disclosure.

By way of summary, Claims 2-31 were pending prior to the submission of this paper. Claims 2, 15, 17, 18, 21, 24, 26-27, and 31 have been amended and Claims 11, 22, and 25 have been cancelled without prejudice or disclaimer. Claims 32-33 have been added as new. Thus, Claims 2-10, 12-21, 24, and 26-33 are pending. Applicant respectfully requests reconsideration of the pending claims in light of the present response.

A. Double Patenting

The Office Action provisionally rejected Claims 2-31 on the ground of nonstatutory double patenting as being allegedly unpatentable over Claims 2-31 of copending U.S. Patent App. No. 16/532,061. *See* Office Action, pgs. 20-22. In the interest of expediting allowance of the present application, Applicant is filing an eTerminal Disclaimer herewith. Applicant therefore requests withdrawal of the nonstatutory double patenting rejections.

B. Claim Objections

The Office Action objected to Claim 18 because of an informality and suggested removal of the term "of" in line 3. *See* Office Action, pg. 2. Applicant has amended Claim 18 as shown above and believes this objection is thereby rendered moot.

C. Claim Rejections Under 35 U.S.C. § 112

The Office Action rejected Claim 17 under 35 U.S.C. § 112 as being indefinite for failing to particularly point out and distinctly claim the subject matter which the inventor or a joint inventor (or for pre-AIA, the applicant) regards as the invention. *See id.* at 2-3. More specifically, the Office Action alleged that there is insufficient antecedent basis for the phrase "the plurality of

detectors" in Claim 17. *See id.* Applicant traverses this rejection. However, in the interest of progressing prosecution, Applicant has amended Claim 17 without disclaimer as shown above and believes this rejection is thereby rendered moot. Applicant reserves the right to pursue the claim as previously presented in one or more continuation applications.

D. <u>The Pending Claims Are Patentable over the Cited Art</u>

Claims 2-6, 8-12, 15-17, and 19-31 stand rejected under 35 U.S.C. § 103 as being unpatentable over U.S. Patent Pub. No. 2014/0361147 to Fei ("Fei") in view of U.S. Patent Pub. No. 2013/0204112 to White et al. ("White"). Claim 13 stands rejected under 35 U.S.C. § 103 as being unpatentable over Fei in view of White and U.S. Patent Pub. No. 2006/0182659 to Unlu et al. ("Unlu"). Claims 2-4, 6-8, 10-12, and 14-18 stand rejected under 35 U.S.C. § 103 as being unpatentable over U.S. Patent No. 5,830,137 to Scharf ("Scharf") in view of Fei and White. Claim 13 stands rejected under 35 U.S.C. § 103 as being unpatentable over Scharf in view of Fei, White, and Unlu. Claims 17-23 stand rejected under 35 U.S.C. § 103 as being unpatentable over Scharf in view of White. Applicant respectfully traverses these rejections and requests that the rejections of the pending claims be withdrawn for at least the following reasons.

Independent Claims 2 and 27 recite, among other things, "a surface comprising a dark-colored coating, the surface positioned between the plurality of detectors and the tissue, wherein an opening defined in the dark-colored coating is configured to allow at least a portion of light reflected from the tissue to pass through the surface." Independent Claim 17 recites, among other things, "permitting light reflected from tissue of the user to pass through an opening in a dark-colored coating on a surface and detecting, with a detector, at least a portion of the reflected light passing through the opening, wherein the surface is positioned between the detector and the tissue." Dependent Claims 16 and 20 recite that the "dark-colored coating comprises black." Applicant respectfully submits that the Office Action has failed to establish that the cited art teaches or suggests at least these features of Claims 2, 16, 17, 20, and 27.

The Office Action admits that neither Fei nor Scharf, alone or in combination, disclose a dark-colored coating comprising an opening configured to allow at least a portion of light reflected from the tissue to pass through the surface. *See* Office Action, pgs. 4, 7, 9-10, and 11-12. However, the Office Action looks to White to satisfy these deficiencies. *See id.* Specifically, the Office Action asserts that the "opaque" sheet having an aperture in White meets these

limitations. *See id.* Further, the Office Action appears to assert that because the "opaque" sheet ***is illustrated as black*** in FIGS. 2B and 4A of White, White discloses the limitations of Claims 16 and 20. *See* Office Action, pgs. 6, 8. Applicant respectfully disagrees.

The ordinary meaning of "opaque" is "not able to be seen through" or "not transparent." New Oxford American Dictionary, 1227 (3rd Edition 2010). While White does disclose an "opaque" sheet, White fails to disclose or suggest a "dark-colored" coating, as recited in independent Claims 2, 17, and 27, let alone that the "dark-colored" coating "comprises black" as recited in dependent Claims 16 and 20. Indeed, neither of the terms "dark" or "black" appear anywhere in the White disclosure. Further, the fact FIGS. 2B and 4A of White illustrate the "opaque" sheet in black and white line drawings does not mean that White discloses, or even suggests, a "dark-colored" coating, let alone that the "dark-colored" coating "comprises black." Rather, it is merely a consequence of the requirement, per 37 C.F.R. 1.84, that drawings in a patent application be shown in black and white. For at least these reasons, Applicant respectfully submits that the Office Action has failed to establish that the cited art teaches or suggests each and every element of Claims 2, 16, 17, 20, and 27.

Additionally, the Office Action has failed to establish that the cited art teaches or suggests, alone or in combination, each and every element of Claims 15 and 23. Dependent Claim 15 recites "wherein the opening defined in the dark-colored coating comprises a width and a length, and wherein the width is larger than the length." Claim 23 recites "wherein the opening in the dark-colored coating comprises a width and a length, and wherein the width is larger than the length." As discussed above, the Office Action asserts that the opaque sheet having an aperture corresponds to the "dark-colored coating" and opening recited in Claims 2, 17, and 27. Further, the Office Action appears to assert that the opaque sheet having an aperture of White meets the limitations of Claims 15 and 23. *See* Office Action, pgs. 6, 8, 10; *see also* White, FIGS. 2A-2B, 4A-4B (see numeral "25"). However, these figures clearly show that the aperture in the opaque sheet in White is a circle. *See* White, FIGS. 2A-2B, 4A-4B; *see also* White, para. [0078] ("At the center of the aluminum sheet 25 was an aperture approximately 1 mm in ***diameter***) (emphasis added). Thus, Applicant respectfully submits that the Office Action has failed to establish that the cited art teaches or suggests each and every element of Claims 15 and 23.

Despite the fact that the cited art has not been shown to teach or suggest each and every element of at least Claims 2, 15, 16, 17, 20, 23, and 27, Applicant has voluntarily amended the claims as shown above to further emphasize the differences between the claims and the cited art. Amended independent Claim 2 recites, among other things (emphasis added):

> a material positioned between the plurality of emitters and a tissue measurement site, ***the material configured to alter a shape by which the light emitted from one or more of the plurality of emitters is distributed onto a surface of the tissue measurement site***;

Amended independent Claim 17 recites, among other things (emphasis added):

> ***shaping at least a portion of the light emitted from the plurality of emitters before the light reaches a tissue measurement site to define a surface area shape on the tissue measurement site***;

Amended independent Claim 24 recites, among other things (emphasis added):

> a material positioned between the plurality of optical sources and a tissue measurement site, ***wherein the material is configured to alter a shape by which at least a portion of the light emitted from one or more of the plurality of emitters is distributed on the tissue measurement site***;

Amended independent Claim 27 recites, among other things (emphasis added):

> a material positioned between the plurality of emitters and a tissue measurement site, ***the material configured to alter a shape by which the light emitted from one or more of the plurality of emitters is distributed on the tissue measurement site***;

Applicant respectfully submits that the cited art has not been shown to teach or suggest, alone or in combination, at least these limitations in combination with other limitations appearing in the claims.

Amended independent Claim 24 further recites, among other things (emphasis added):

> a light block having a circular shape;
> a plurality of detectors configured to detect the light after the light passes through ***a portion of the tissue measurement site bounded by the light block, wherein the plurality of detectors are arranged in an array having a spatial configuration corresponding to a shape of the portion of the tissue measurement site bounded by the circular shaped light block***, wherein the plurality of detectors are further configured to output at least one signal responsive to the detected light, and wherein the plurality of optical sources and the plurality of detectors are arranged in a reflectance measurement configuration;

Applicant respectfully submits that the cited art has not been shown to teach or suggest, alone or in combination, at least these additional limitations of amended Claim 24 in combination with other limitations appearing in the claim.

Dependent Claims 3-10, 12-16, 18-21, 23, 26, and 28-31 depend directly or indirectly from Claims 2, 17, 24, or 27 and are thus patentably distinct from the cited art of record for at least the reasons set forth above in regard to Claims 2, 17, 24, or 27. In addition, Applicant notes that these claims, when taken in the context of Claims 2, 17, 24, or 27, set forth a number of recitations not taught, disclosed, or suggested by the cited references, alone or in combination.

Dependent Claims 32-33 were added in the present paper and our believed to be patentable over the cited art. Accordingly, Applicant respectfully requests that Claims 32-33 be indicated as allowable.

For at least these additional reasons, Applicant requests that the rejections to the pending claims be withdrawn and the claims allowed.

E. <u>No Disclaimers or Disavowals</u>

Although the present communication may include alterations to the application or claims, or characterizations of claim scope or referenced art, Applicant is not conceding in this application that previously pending claims are not patentable over the cited references. Rather, any alterations or characterizations are being made to facilitate expeditious prosecution of this application. Applicant reserves the right to pursue at a later date any previously pending or other broader or narrower claims that capture any subject matter supported by the present disclosure, including subject matter found to be specifically disclaimed herein or by any prior prosecution. Accordingly, reviewers of this or any parent, child or related prosecution history shall not reasonably infer that Applicant has made any disclaimers or disavowals of any subject matter supported by the present application.

Please charge any additional fees, including any fees for additional extension of time, or credit overpayment to Deposit Account No. 11-1410.

Respectfully submitted,

KNOBBE, MARTENS, OLSON & BEAR, LLP

Dated: January 28, 2020

By: /Aaron S. Johnson/
Aaron S. Johnson
Registration No. 74,164
Registered Practitioner
Customer No. 64735
(949) 760-0404

IN THE UNITED STATES PATENT AND TRADEMARK OFFICE

Inventor	:	Ammar Al-Ali
App. No.	:	16/532,065
Filed	:	August 5, 2019
For	:	PHYSIOLOGICAL MONITORING DEVICES, SYSTEMS, AND METHODS
Examiner	:	Fardanesh, Marjan
Art Unit	:	3791
Conf. No.	:	1092

SUPPLEMENTAL AMENDMENT

Mail Stop Amendment
Commissioner for Patents
P.O. Box 1450
Alexandria, VA 22313-1450

Dear Commissioner:

Applicant submits the following paper to supplement Applicant's Response submitted on November 14, 2019 and Applicant's Supplemental Amendments submitted on January 7, 2020 and January 28, 2020, which were responsive to the Non-Final Office Action dated October 21, 2019. Applicant respectfully requests reconsideration of the application in view of the following:

Amendments to the Specification begin on page 2 of this paper.

Amendments to the Claims are reflected in the listing of claims which begins on page 3 of this paper;

Summary of the Interview begins on page 9 of this paper; and

Remarks begin on page 10 of this paper.

MASIMO 2056
Apple v. Masimo
IPR2024-00242

AMENDMENTS TO THE SPECIFICATION

Please amend the originally filed specification as set forth below.

[0048] The light diffuser 704 receives the optical radiation emitted from the emitter [[302]]702 and homogenously spreads the optical radiation over a wide, donut-shaped area, such as the area outlined by the light diffuser 704 as depicted in FIG. 7B. Advantageously, the diffuser 704 can receive emitted light in the form of a 2D point optical source (or any other form) and spread the light to fit the desired surface area on a plane defined by the surface of the tissue measurement site 102. In an embodiment, the diffuser 704 is made of ground glass or glass beads. A skilled artisan will understand that may other materials can be used to make the light diffuser 704.

[0049] The light blocker 706 includes an annular ring having a cover portion 707 sized and shaped to form a light isolation chamber for the light concentrator 708 and the detector 710. (For purposes of illustration, the light block cover 707 is not illustrated in FIG. 7B.) The light blocker 706 and the cover 707 can be made of any material that optically isolates the light concentrator 708 and the detector 710. The light isolation chamber formed by the light blocker 706 and cover [[708]]707 ensures that the only light detected by the detector 710 is light that is reflected from the tissue measurement site.

AMENDMENTS TO THE CLAIMS

A complete listing of all claims is presented below. ***Amendments to the version of the claims as of the date of mailing of the October 21, 2019 Non-Final Office Action*** are shown below, where insertions are underlined (e.g., insertion), and deletions are struck through or in double brackets (e.g., ~~deletion~~ or [[deletion]]).

1. **(Cancelled)**
2. **(Currently Amended)** A physiological monitoring device comprising:

a plurality of emitters, wherein each of the plurality of emitters is configured to emit light proximate a wrist of a user;

a material positioned between the plurality of emitters and a[[the]] tissue measurement site, the material configured to alter a shape [[of]]by which the light emitted from one or more of the plurality of emitters is distributed onto a surface of~~before the light reaches~~ the tissue measurement site;

a plurality of detectors configured to detect the light after attenuation by tissue, the plurality of detectors further configured to output at least one signal responsive to the detected light;

a surface comprising a dark-colored coating, the surface positioned between the plurality of detectors and the tissue, ~~the dark-colored coating comprising~~ wherein an opening defined in the dark-colored coating is configured to allow at least a portion of light reflected from the tissue to pass through the surface;

a light block ~~between the plurality of emitters and the plurality of detectors and~~ configured to prevent at least a portion of the light emitted from the plurality of emitters from reaching the plurality of detectors without first reaching the tissue; and

a processor configured to receive and process one or more signals responsive to the at least one outputted signal and determine a physiological parameter of the user responsive to the one or more signals.

3. **(Previously Presented)** The physiological monitoring device of Claim 2, wherein the material is configured to change an output intensity profile of the light.

4. **(Previously Presented)** The physiological monitoring device of Claim 2, further comprising a display configured to present visual feedback responsive to the determined physiological parameter.

5. **(Previously Presented)** The physiological monitoring device of Claim 4, wherein the display is a touch-screen display.

6. **(Previously Presented)** The physiological monitoring device of Claim 2, wherein the plurality of emitters and the plurality of detectors are arranged in a reflectance measurement configuration.

7. **(Previously Presented)** The physiological monitoring device of Claim 2, wherein the light block comprises an at least partially circular shape, and wherein the plurality of emitters are positioned outside the light block and the plurality of detectors are positioned inside the light block.

8. **(Previously Presented)** The physiological monitoring device of Claim 2, wherein the physiological parameter comprises pulse rate.

9. **(Previously Presented)** The physiological monitoring device of Claim 2, wherein the material comprises plastic.

10. **(Previously Presented)** The physiological monitoring device of Claim 2, wherein the material comprises glass.

11. **(Cancelled)**

12. **(Previously Presented)** The physiological monitoring device of Claim 2, wherein an amount of light transmitted by the material to the tissue measurement site is greater than 90% of the light emitted by the plurality of emitters.

13. **(Previously Presented)** The physiological monitoring device of Claim 2, wherein the light emitted from the one or more of the plurality of emitters comprises a Gausian intensity profile after interaction with the material.

14. **(Previously Presented)** The physiological monitoring device of Claim 2, wherein the altered shape of the light after interaction with the material comprises a circular geometry.

15. **(Currently Amended)** The physiological monitoring device of Claim 2, wherein the opening <u>defined</u> in the dark-colored coating comprises a width and a length, and wherein the width is larger than the length.

16. **(Previously Presented)** The physiological monitoring device of Claim 2, wherein the dark-colored coating comprises black.

17. **(Currently Amended)** A method of measuring a physiological parameter, the method comprising:

emitting, from a plurality of emitters, light proximate a wrist of a user;

shaping at least a portion of the light emitted from the plurality of emitters before the light reaches [[the]]a tissue measurement site to define a surface area shape on the tissue measurement site;

permitting light reflected from tissue of the user to pass through an opening in a dark-colored coating on a surface and detecting, with a detector, at least a portion of the reflected light passing through the opening, wherein the surface is positioned between the detector and the tissue;

preventing at least a portion of the light emitted from the plurality of emitters from reaching the ~~plurality of~~ detector[[s]] without first reaching the tissue with a light block ~~positioned between the plurality of emitters and the detector~~;

outputting, from the detector, at least one signal responsive to the detected light; and

electronically processing one or more signals responsive to the outputted at least one signal to determine a physiological parameter.

18. **(Currently Amended)** The method of Claim 17, wherein the light block comprises an at least partially circular shape, and wherein the plurality of emitters are positioned outside the light block and the [[of]]detector is positioned inside the light block.

19. **(Previously Presented)** The method of Claim 17, further comprising presenting, with a display, visual feedback responsive to the determined physiological parameter.

20. **(Previously Presented)** The method of Claim 17, wherein the dark-colored coating comprises black.

21. **(Currently Amended)** The method of Claim 17, wherein the step of shaping the at least the portion of the light emitted from the plurality of emitters is performed with a material comprising at least one of glass [[or]]and plastic.

22. **(Cancelled)**

23. **(Previously Presented)** The method of Claim 17, wherein the opening in the dark-colored coating comprises a width and a length, and wherein the width is larger than the length.

24. **(Currently Amended)** A physiological monitoring device comprising:

a plurality of optical sources configured to emit light proximate a wrist of a user;

a material positioned between the plurality of optical sources and a tissue measurement site, wherein the material is configured to alter a shape by which at least a portion of the light emitted from one or more of the plurality of emitters is distributed on~~before the light reaches~~ the tissue measurement site;

a light block having a circular shape;

a plurality of detectors configured to detect the light after ~~attenuation~~ the light passes through a portion of the tissue measurement site bounded by the light block~~by tissue~~, wherein the plurality of detectors are arranged in an array having a spatial configuration corresponding to a shape of the portion of the tissue measurement site bounded by the circular shaped light block, wherein the plurality of detectors are further configured to output at least one signal responsive to the detected light, and wherein the plurality of optical sources and the plurality of detectors are arranged in a reflectance measurement configuration;

~~a surface comprising a dark-colored coating, the surface positioned between the plurality of detectors and the tissue, the dark-colored coating comprising an opening configured to allow at least a portion of light reflected from the tissue to pass through the surface;~~

wherein[[a]] the light block is ~~between the plurality of optical sources and the plurality of detectors and~~ configured to prevent at least a portion of light emitted from the plurality of optical sources from reaching the plurality of detectors without first reaching the tissue;

a processor configured to receive and process one or more signals responsive to the at least one outputted signal and determine a physiological parameter of the user responsive to the one or more signals; and

~~a touch screen display configured to present visual feedback responsive to the determined physiological parameter;~~

wherein the physiological monitoring device is configured to ~~wirelessly~~ transmit physiological parameter data to a separate ~~device~~processor.

25. **(Cancelled)**

26. **(Currently Amended)** The physiological monitoring device of Claim 24, wherein the material comprises at least one of glass [[or]]and plastic.

27. **(Currently Amended)** A system configured to measure one or more physiological parameters of a user, the system comprising:

a physiological monitoring device comprising:

a plurality of emitters configured to emit light proximate a wrist of a user;

a material positioned between the plurality of emitters and a tissue measurement site, the material configured to alter a shape [[of]]by which the light emitted from one or more of the plurality of emitters is distributed on~~before the light reaches~~ the tissue measurement site;

a plurality of detectors configured to detect the light after attenuation by tissue, the plurality of detectors further configured to output at least one signal responsive to the detected light;

a surface comprising a dark-colored coating, the surface positioned between the plurality of detectors and the tissue, ~~the dark-colored coating comprising~~wherein an opening defined in the dark-colored coating is configured to allow at least a portion of light reflected from the tissue to pass through the surface;

a light block ~~between the plurality of emitters and the plurality of detectors and~~ configured to prevent at least a portion of light from the plurality of emitters from reaching the plurality of detectors without first reaching the tissue; and

a processor configured to receive and process one or more signals responsive to the outputted at least one signal and determine a physiological parameter of the user responsive to the one or more signals; and

a processing device configured to wirelessly receive physiological parameter data from the physiological monitoring device, wherein the processing device comprises a user interface, a

storage device, and a network interface configured to wirelessly communicate with the physiological monitoring device, and wherein the user interface includes a touch-screen display configured to present visual feedback responsive to the physiological parameter data.

28. **(Previously Presented)** The system of Claim 27, wherein the system is configured to determine a state of wellness of the user based on the determined physiological parameter.

29. **(Previously Presented)** The system of Claim 27, wherein the system is configured to determine a trend of wellness of the user based on the determined physiological parameter.

30. **(Previously Presented)** The system of Claim 27, wherein the visual feedback presented by the touch-screen display is responsive to a pulse rate of the user.

31. **(Currently Amended)** The system of Claim 27, wherein the material comprises at least one of glass [[or]]<u>and</u> plastic.

32. **(New)** The system of Claim 27, wherein the altered shape comprises a width and a length, and wherein the width is different from the length.

33. **(New)** The physiological monitoring device of Claim 24, wherein the altered shape comprises a width and a length, and wherein the width is different from the length.

SUMMARY OF INTERVIEW

Applicant thanks Examiner Fardanesh for discussing the present application with Applicant's representatives Jarom D. Kesler (Reg. No. 57,046) and Aaron S. Johnson (Reg. No. 74,164) during an interview on December 3, 2019 ("Interview"). During the Interview, Applicant's representatives and Examiner Fardanesh discussed the differences between the pending claims and the cited art of record and further discussed the claim amendments as presented in Applicant's Response submitted on November 14, 2019. While no agreement was reached, Applicant's representatives and Examiner Fardanesh discussed the possibility of amending the claims to further clarify the differences with the cited art of record.

REMARKS

This paper supplements Applicant's Response submitted on November 14, 2019 and Applicant's Supplemental Amendments submitted on January 7, 2020 and January 28, 2020, which were responsive to the Non-Final Office Action dated October 21, 2019. Applicant has voluntarily amended the claims as shown above in light of the discussion during the Interview with Examiner Fardanesh to further clarify the differences between the present claims and the cited art of record. Despite such voluntary amendments, Applicant reserves the right to pursue any previously pending or other broader or narrower claims that capture any subject matter supported by the present disclosure.

By way of summary, Claims 2-31 were pending prior to the submission of this paper. Claims 2, 15, 17, 18, 21, 24, 26-27, and 31 have been amended and Claims 11, 22, and 25 have been cancelled without prejudice or disclaimer. Claims 32-33 have been added as new. Thus, Claims 2-10, 12-21, 24, and 26-33 are pending. Applicant respectfully requests reconsideration of the pending claims in light of the present response.

A. Double Patenting

The Office Action provisionally rejected Claims 2-31 on the ground of nonstatutory double patenting as being allegedly unpatentable over Claims 2-31 of copending U.S. Patent App. No. 16/532,065. *See* Office Action, pgs. 24-26. In the interest of expediting allowance of the present application, Applicant filed an eTerminal Disclaimer on January 28, 2020. Applicant therefore requests withdrawal of the nonstatutory double patenting rejections.

B. Claim Objections

The Office Action objected to Claim 18 because of an informality and suggested removal of the term "of" in line 3. *See* Office Action, pg. 2. Applicant has amended Claim 18 as shown above and believes this objection is thereby rendered moot.

C. Claim Rejections Under 35 U.S.C. § 112

The Office Action rejected Claim 17 under 35 U.S.C. § 112 as being indefinite for failing to particularly point out and distinctly claim the subject matter which the inventor or a joint inventor (or for pre-AIA, the applicant) regards as the invention. *See id.* at 2-3. More specifically,

the Office Action alleged that there is insufficient antecedent basis for the phrase "the plurality of detectors" in Claim 17. *See id.* Applicant traverses this rejection. However, in the interest of progressing prosecution, Applicant has amended Claim 17 without disclaimer as shown above and believes this rejection is thereby rendered moot. Applicant reserves the right to pursue the claim as previously presented in one or more continuation applications.

D. <u>The Pending Claims Are Patentable over the Cited Art</u>

Claims 2-6, 8-12, 15-17, and 19-31 stand rejected under 35 U.S.C. § 103 as being unpatentable over U.S. Patent Pub. No. 2014/0361147 to Fei ("Fei") in view of U.S. Patent Pub. No. 2013/0204112 to White et al. ("White"). Claim 13 stands rejected under 35 U.S.C. § 103 as being unpatentable over Fei in view of White and U.S. Patent Pub. No. 2006/0182659 to Unlu et al. ("Unlu"). Claims 2-4, 6-8, 10-12, and 14-18 stand rejected under 35 U.S.C. § 103 as being unpatentable over U.S. Patent No. 5,830,137 to Scharf ("Scharf") in view of Fei and White. Claim 13 stands rejected under 35 U.S.C. § 103 as being unpatentable over Scharf in view of Fei, White, and Unlu. Claims 17-23 stand rejected under 35 U.S.C. § 103 as being unpatentable over Scharf in view of White. Applicant respectfully traverses these rejections and requests that the rejections of the pending claims be withdrawn for at least the following reasons.

Independent Claims 2 and 27 recite, among other things, "a surface comprising a dark-colored coating, the surface positioned between the plurality of detectors and the tissue, wherein an opening defined in the dark-colored coating is configured to allow at least a portion of light reflected from the tissue to pass through the surface." Independent Claim 17 recites, among other things, "permitting light reflected from tissue of the user to pass through an opening in a dark-colored coating on a surface and detecting, with a detector, at least a portion of the reflected light passing through the opening, wherein the surface is positioned between the detector and the tissue." Dependent Claims 16 and 20 recite that the "dark-colored coating comprises black." Applicant respectfully submits that the Office Action has failed to establish that the cited art teaches or suggests at least these features of Claims 2, 16, 17, 20, and 27.

The Office Action admits that neither Fei nor Scharf, alone or in combination, disclose a dark-colored coating comprising an opening configured to allow at least a portion of light reflected from the tissue to pass through the surface. *See* Office Action, pgs. 4, 7, 9-10, and 11-12. However, the Office Action looks to White to satisfy these deficiencies. *See id.* Specifically,

the Office Action asserts that the "opaque" sheet having an aperture in White meets these limitations. *See id.* Further, the Office Action appears to assert that because the "opaque" sheet ***is illustrated as black*** in FIGS. 2B and 4A of White, White discloses the limitations of Claims 16 and 20. *See* Office Action, pgs. 6, 8. Applicant respectfully disagrees.

The ordinary meaning of "opaque" is "not able to be seen through" or "not transparent." New Oxford American Dictionary, 1227 (3rd Edition 2010). While White does disclose an "opaque" sheet, White fails to disclose or suggest a "dark-colored" coating, as recited in independent Claims 2, 17, and 27, let alone that the "dark-colored" coating "comprises black" as recited in dependent Claims 16 and 20. Indeed, neither of the terms "dark" or "black" appear anywhere in the White disclosure. Further, the fact FIGS. 2B and 4A of White illustrate the "opaque" sheet in black and white line drawings does not mean that White discloses, or even suggests, a "dark-colored" coating, let alone that the "dark-colored" coating "comprises black." Rather, it is merely a consequence of the requirement, per 37 C.F.R. 1.84, that drawings in a patent application be shown in black and white. For at least these reasons, Applicant respectfully submits that the Office Action has failed to establish that the cited art teaches or suggests each and every element of Claims 2, 16, 17, 20, and 27.

Additionally, the Office Action has failed to establish that the cited art teaches or suggests, alone or in combination, each and every element of Claims 15 and 23. Dependent Claim 15 recites "wherein the opening defined in the dark-colored coating comprises a width and a length, and wherein the width is larger than the length." Claim 23 recites "wherein the opening in the dark-colored coating comprises a width and a length, and wherein the width is larger than the length." As discussed above, the Office Action asserts that the opaque sheet having an aperture corresponds to the "dark-colored coating" and opening recited in Claims 2, 17, and 27. Further, the Office Action appears to assert that the opaque sheet having an aperture of White meets the limitations of Claims 15 and 23. *See* Office Action, pgs. 6, 8, 10; *see also* White, FIGS. 2A-2B, 4A-4B (see numeral "25"). However, these figures clearly show that the aperture in the opaque sheet in White is a circle. *See* White, FIGS. 2A-2B, 4A-4B; *see also* White, para. [0078] ("At the center of the aluminum sheet 25 was an aperture approximately 1 mm in ***diameter***) (emphasis added). Thus, Applicant respectfully submits that the Office Action has

failed to establish that the cited art teaches or suggests each and every element of Claims 15 and 23.

Despite the fact that the cited art has not been shown to teach or suggest each and every element of at least Claims 2, 15, 16, 17, 20, 23, and 27, Applicant has voluntarily amended the claims as shown above to further emphasize the differences between the claims and the cited art. Amended independent Claim 2 recites, among other things (emphasis added):

> a material positioned between the plurality of emitters and a tissue measurement site, ***the material configured to alter a shape by which the light emitted from one or more of the plurality of emitters is distributed onto a surface of the tissue measurement site***;

Amended independent Claim 17 recites, among other things (emphasis added):

> ***shaping at least a portion of the light emitted from the plurality of emitters before the light reaches a tissue measurement site to define a surface area shape on the tissue measurement site***;

Amended independent Claim 24 recites, among other things (emphasis added):

> a material positioned between the plurality of optical sources and a tissue measurement site, ***wherein the material is configured to alter a shape by which at least a portion of the light emitted from one or more of the plurality of emitters is distributed on the tissue measurement site***;

Amended independent Claim 27 recites, among other things (emphasis added):

> a material positioned between the plurality of emitters and a tissue measurement site, ***the material configured to alter a shape by which the light emitted from one or more of the plurality of emitters is distributed on the tissue measurement site***;

Applicant respectfully submits that the cited art has not been shown to teach or suggest, alone or in combination, at least these limitations in combination with other limitations appearing in the claims.

Amended independent Claim 24 further recites, among other things (emphasis added):

> a light block having a circular shape;
> a plurality of detectors configured to detect the light after the light passes through ***a portion of the tissue measurement site bounded by the light block, wherein the plurality of detectors are arranged in an array having a spatial configuration corresponding to a shape of the portion of the tissue measurement site bounded by the circular shaped light block***, wherein the plurality of detectors are further configured to output at least one signal responsive to the detected light, and wherein the plurality of optical sources and the plurality of detectors are arranged in a reflectance measurement configuration;

Applicant respectfully submits that the cited art has not been shown to teach or suggest, alone or in combination, at least these additional limitations of amended Claim 24 in combination with other limitations appearing in the claim.

Dependent Claims 3-10, 12-16, 18-21, 23, 26, and 28-31 depend directly or indirectly from Claims 2, 17, 24, or 27 and are thus patentably distinct from the cited art of record for at least the reasons set forth above in regard to Claims 2, 17, 24, or 27. In addition, Applicant notes that these claims, when taken in the context of Claims 2, 17, 24, or 27, set forth a number of recitations not taught, disclosed, or suggested by the cited references, alone or in combination.

Dependent Claims 32-33 were added in the present paper and our believed to be patentable over the cited art. Accordingly, Applicant respectfully requests that Claims 32-33 be indicated as allowable.

For at least these additional reasons, Applicant requests that the rejections to the pending claims be withdrawn and the claims allowed.

E. <u>No Disclaimers or Disavowals</u>

Although the present communication may include alterations to the application or claims, or characterizations of claim scope or referenced art, Applicant is not conceding in this application that previously pending claims are not patentable over the cited references. Rather, any alterations or characterizations are being made to facilitate expeditious prosecution of this application. Applicant reserves the right to pursue at a later date any previously pending or other broader or narrower claims that capture any subject matter supported by the present disclosure, including subject matter found to be specifically disclaimed herein or by any prior prosecution. Accordingly, reviewers of this or any parent, child or related prosecution history shall not reasonably infer that Applicant has made any disclaimers or disavowals of any subject matter supported by the present application.

Please charge any additional fees, including any fees for additional extension of time, or credit overpayment to Deposit Account No. 11-1410.

Respectfully submitted,

KNOBBE, MARTENS, OLSON & BEAR, LLP

Dated: February 5, 2020

By: /Aaron S. Johnson/
Aaron S. Johnson
Registration No. 74,164
Registered Practitioner
Customer No. 64735
(949) 760-0404

UNITED STATES PATENT AND TRADEMARK OFFICE

UNITED STATES DEPARTMENT OF COMMERCE
United States Patent and Trademark Office
Address: COMMISSIONER FOR PATENTS
P.O. Box 1450
Alexandria, Virginia 22313-1450
www.uspto.gov

NOTICE OF ALLOWANCE AND FEE(S) DUE

64735 7590 03/09/2020
KNOBBE, MARTENS, OLSON & BEAR, LLP
MASIMO CORPORATION (MASIMO)
2040 MAIN STREET
FOURTEENTH FLOOR
IRVINE, CA 92614

EXAMINER
FARDANESH, MARJAN

ART UNIT	PAPER NUMBER
3791	

DATE MAILED: 03/09/2020

APPLICATION NO.	FILING DATE	FIRST NAMED INVENTOR	ATTORNEY DOCKET NO.	CONFIRMATION NO.
16/532,065	08/05/2019	Ammar Al-Ali	MAS.1007C3	1092

TITLE OF INVENTION: ADVANCED PULSE OXIMETRY SENSOR

APPLN. TYPE	ENTITY STATUS	ISSUE FEE DUE	PUBLICATION FEE DUE	PREV. PAID ISSUE FEE	TOTAL FEE(S) DUE	DATE DUE
nonprovisional	UNDISCOUNTED	$1000	$0.00	$0.00	$1000	06/09/2020

THE APPLICATION IDENTIFIED ABOVE HAS BEEN EXAMINED AND IS ALLOWED FOR ISSUANCE AS A PATENT. PROSECUTION ON THE MERITS IS CLOSED. THIS NOTICE OF ALLOWANCE IS NOT A GRANT OF PATENT RIGHTS. THIS APPLICATION IS SUBJECT TO WITHDRAWAL FROM ISSUE AT THE INITIATIVE OF THE OFFICE OR UPON PETITION BY THE APPLICANT. SEE 37 CFR 1.313 AND MPEP 1308.

THE ISSUE FEE AND PUBLICATION FEE (IF REQUIRED) MUST BE PAID WITHIN THREE MONTHS FROM THE MAILING DATE OF THIS NOTICE OR THIS APPLICATION SHALL BE REGARDED AS ABANDONED. THIS STATUTORY PERIOD CANNOT BE EXTENDED. SEE 35 U.S.C. 151. THE ISSUE FEE DUE INDICATED ABOVE DOES NOT REFLECT A CREDIT FOR ANY PREVIOUSLY PAID ISSUE FEE IN THIS APPLICATION. IF AN ISSUE FEE HAS PREVIOUSLY BEEN PAID IN THIS APPLICATION (AS SHOWN ABOVE), THE RETURN OF PART B OF THIS FORM WILL BE CONSIDERED A REQUEST TO REAPPLY THE PREVIOUSLY PAID ISSUE FEE TOWARD THE ISSUE FEE NOW DUE.

HOW TO REPLY TO THIS NOTICE:

I. Review the ENTITY STATUS shown above. If the ENTITY STATUS is shown as SMALL or MICRO, verify whether entitlement to that entity status still applies.

If the ENTITY STATUS is the same as shown above, pay the TOTAL FEE(S) DUE shown above.

If the ENTITY STATUS is changed from that shown above, on PART B - FEE(S) TRANSMITTAL, complete section number 5 titled "Change in Entity Status (from status indicated above)".

For purposes of this notice, small entity fees are 1/2 the amount of undiscounted fees, and micro entity fees are 1/2 the amount of small entity fees.

II. PART B - FEE(S) TRANSMITTAL, or its equivalent, must be completed and returned to the United States Patent and Trademark Office (USPTO) with your ISSUE FEE and PUBLICATION FEE (if required). If you are charging the fee(s) to your deposit account, section "4b" of Part B - Fee(s) Transmittal should be completed and an extra copy of the form should be submitted. If an equivalent of Part B is filed, a request to reapply a previously paid issue fee must be clearly made, and delays in processing may occur due to the difficulty in recognizing the paper as an equivalent of Part B.

III. All communications regarding this application must give the application number. Please direct all communications prior to issuance to Mail Stop ISSUE FEE unless advised to the contrary.

IMPORTANT REMINDER: Maintenance fees are due in utility patents issuing on applications filed on or after Dec. 12, 1980. It is patentee's responsibility to ensure timely payment of maintenance fees when due. More information is available at www.uspto.gov/PatentMaintenanceFees.

PART B - FEE(S) TRANSMITTAL

Complete and send this form, together with applicable fee(s), by mail or fax, or via EFS-Web.

By mail, send to: Mail Stop ISSUE FEE
Commissioner for Patents
P.O. Box 1450
Alexandria, Virginia 22313-1450

By fax, send to: (571)-273-2885

INSTRUCTIONS: This form should be used for transmitting the ISSUE FEE and PUBLICATION FEE (if required). Blocks 1 through 5 should be completed where appropriate. All further correspondence including the Patent, advance orders and notification of maintenance fees will be mailed to the current correspondence address as indicated unless corrected below or directed otherwise in Block 1, by (a) specifying a new correspondence address; and/or (b) indicating a separate "FEE ADDRESS" for maintenance fee notifications.

CURRENT CORRESPONDENCE ADDRESS (Note: Use Block 1 for any change of address)

64735 7590 03/09/2020
KNOBBE, MARTENS, OLSON & BEAR, LLP
MASIMO CORPORATION (MASIMO)
2040 MAIN STREET
FOURTEENTH FLOOR
IRVINE, CA 92614

Note: A certificate of mailing can only be used for domestic mailings of the Fee(s) Transmittal. This certificate cannot be used for any other accompanying papers. Each additional paper, such as an assignment or formal drawing, must have its own certificate of mailing or transmission.

Certificate of Mailing or Transmission

I hereby certify that this Fee(s) Transmittal is being deposited with the United States Postal Service with sufficient postage for first class mail in an envelope addressed to the Mail Stop ISSUE FEE address above, or being transmitted to the USPTO via EFS-Web or by facsimile to (571) 273-2885, on the date below.

(Typed or printed name)

(Signature)

(Date)

APPLICATION NO.	FILING DATE	FIRST NAMED INVENTOR	ATTORNEY DOCKET NO.	CONFIRMATION NO.
16/532,065	08/05/2019	Ammar Al-Ali	MAS.1007C3	1092

TITLE OF INVENTION: ADVANCED PULSE OXIMETRY SENSOR

APPLN. TYPE	ENTITY STATUS	ISSUE FEE DUE	PUBLICATION FEE DUE	PREV. PAID ISSUE FEE	TOTAL FEE(S) DUE	DATE DUE
nonprovisional	UNDISCOUNTED	$1000	$0.00	$0.00	$1000	06/09/2020

EXAMINER	ART UNIT	CLASS-SUBCLASS
FARDANESH, MARJAN	3791	600-323000

1. Change of correspondence address or indication of "Fee Address" (37 CFR 1.363).

❑ Change of correspondence address (or Change of Correspondence Address form PTO/SB/122) attached.

❑ "Fee Address" indication (or "Fee Address" Indication form PTO/SB/47; Rev 03-09 or more recent) attached. **Use of a Customer Number is required.**

2. For printing on the patent front page, list
(1) The names of up to 3 registered patent attorneys or agents OR, alternatively,
(2) The name of a single firm (having as a member a registered attorney or agent) and the names of up to 2 registered patent attorneys or agents. If no name is listed, no name will be printed.

1_____
2_____
3_____

3. ASSIGNEE NAME AND RESIDENCE DATA TO BE PRINTED ON THE PATENT (print or type)

PLEASE NOTE: Unless an assignee is identified below, no assignee data will appear on the patent. If an assignee is identified below, the document must have been previously recorded, or filed for recordation, as set forth in 37 CFR 3.11 and 37 CFR 3.81(a). Completion of this form is NOT a substitute for filing an assignment.

(A) NAME OF ASSIGNEE (B) RESIDENCE: (CITY and STATE OR COUNTRY)

Please check the appropriate assignee category or categories (will not be printed on the patent) : ❑ Individual ❑ Corporation or other private group entity ❑ Government

4a. Fees submitted: ❑Issue Fee ❑Publication Fee (if required) ❑Advance Order - # of Copies _____

4b. Method of Payment: *(Please first reapply any previously paid fee shown above)*

❑ Electronic Payment via EFS-Web ❑ Enclosed check ❑ Non-electronic payment by credit card (Attach form PTO-2038)

❑ The Director is hereby authorized to charge the required fee(s), any deficiency, or credit any overpayment to Deposit Account No. _____

5. **Change in Entity Status** (from status indicated above)

❑ Applicant certifying micro entity status. See 37 CFR 1.29

❑ Applicant asserting small entity status. See 37 CFR 1.27

❑ Applicant changing to regular undiscounted fee status.

NOTE: Absent a valid certification of Micro Entity Status (see forms PTO/SB/15A and 15B), issue fee payment in the micro entity amount will not be accepted at the risk of application abandonment.
NOTE: If the application was previously under micro entity status, checking this box will be taken to be a notification of loss of entitlement to micro entity status.
NOTE: Checking this box will be taken to be a notification of loss of entitlement to small or micro entity status, as applicable.

NOTE: This form must be signed in accordance with 37 CFR 1.31 and 1.33. See 37 CFR 1.4 for signature requirements and certifications.

Authorized Signature _____ Date _____

Typed or printed name _____ Registration No. _____

UNITED STATES PATENT AND TRADEMARK OFFICE

UNITED STATES DEPARTMENT OF COMMERCE
United States Patent and Trademark Office
Address: COMMISSIONER FOR PATENTS
P.O. Box 1450
Alexandria, Virginia 22313-1450
www.uspto.gov

APPLICATION NO.	FILING DATE	FIRST NAMED INVENTOR	ATTORNEY DOCKET NO.	CONFIRMATION NO.
16/532,065	08/05/2019	Ammar Al-Ali	MAS.1007C3	1092

64735 7590 03/09/2020
KNOBBE, MARTENS, OLSON & BEAR, LLP
MASIMO CORPORATION (MASIMO)
2040 MAIN STREET
FOURTEENTH FLOOR
IRVINE, CA 92614

EXAMINER
FARDANESH, MARJAN

ART UNIT	PAPER NUMBER
3791	

DATE MAILED: 03/09/2020

Determination of Patent Term Adjustment under 35 U.S.C. 154 (b)
(Applications filed on or after May 29, 2000)

The Office has discontinued providing a Patent Term Adjustment (PTA) calculation with the Notice of Allowance.

Section 1(h)(2) of the AIA Technical Corrections Act amended 35 U.S.C. 154(b)(3)(B)(i) to eliminate the requirement that the Office provide a patent term adjustment determination with the notice of allowance. See Revisions to Patent Term Adjustment, 78 Fed. Reg. 19416, 19417 (Apr. 1, 2013). Therefore, the Office is no longer providing an initial patent term adjustment determination with the notice of allowance. The Office will continue to provide a patent term adjustment determination with the Issue Notification Letter that is mailed to applicant approximately three weeks prior to the issue date of the patent, and will include the patent term adjustment on the patent. Any request for reconsideration of the patent term adjustment determination (or reinstatement of patent term adjustment) should follow the process outlined in 37 CFR 1.705.

Any questions regarding the Patent Term Extension or Adjustment determination should be directed to the Office of Patent Legal Administration at (571)-272-7702. Questions relating to issue and publication fee payments should be directed to the Customer Service Center of the Office of Patent Publication at 1-(888)-786-0101 or (571)-272-4200.

PTOL-85 (Rev. 02/11)

MASIMO 2056
Apple v. Masimo
IPR2024-00242

OMB Clearance and PRA Burden Statement for PTOL-85 Part B

The Paperwork Reduction Act (PRA) of 1995 requires Federal agencies to obtain Office of Management and Budget approval before requesting most types of information from the public. When OMB approves an agency request to collect information from the public, OMB (i) provides a valid OMB Control Number and expiration date for the agency to display on the instrument that will be used to collect the information and (ii) requires the agency to inform the public about the OMB Control Number's legal significance in accordance with 5 CFR 1320.5(b).

The information collected by PTOL-85 Part B is required by 37 CFR 1.311. The information is required to obtain or retain a benefit by the public which is to file (and by the USPTO to process) an application. Confidentiality is governed by 35 U.S.C. 122 and 37 CFR 1.14. This collection is estimated to take 30 minutes to complete, including gathering, preparing, and submitting the completed application form to the USPTO. Time will vary depending upon the individual case. Any comments on the amount of time you require to complete this form and/or suggestions for reducing this burden, should be sent to the Chief Information Officer, U.S. Patent and Trademark Office, U.S. Department of Commerce, P.O. Box 1450, Alexandria, Virginia 22313-1450. DO NOT SEND FEES OR COMPLETED FORMS TO THIS ADDRESS. SEND TO: Commissioner for Patents, P.O. Box 1450, Alexandria, Virginia 22313-1450. Under the Paperwork Reduction Act of 1995, no persons are required to respond to a collection of information unless it displays a valid OMB control number.

Privacy Act Statement

The Privacy Act of 1974 (P.L. 93-579) requires that you be given certain information in connection with your submission of the attached form related to a patent application or patent. Accordingly, pursuant to the requirements of the Act, please be advised that: (1) the general authority for the collection of this information is 35 U.S.C. 2(b)(2); (2) furnishing of the information solicited is voluntary; and (3) the principal purpose for which the information is used by the U.S. Patent and Trademark Office is to process and/or examine your submission related to a patent application or patent. If you do not furnish the requested information, the U.S. Patent and Trademark Office may not be able to process and/or examine your submission, which may result in termination of proceedings or abandonment of the application or expiration of the patent.

The information provided by you in this form will be subject to the following routine uses:

1. The information on this form will be treated confidentially to the extent allowed under the Freedom of Information Act (5 U.S.C. 552) and the Privacy Act (5 U.S.C 552a). Records from this system of records may be disclosed to the Department of Justice to determine whether disclosure of these records is required by the Freedom of Information Act.
2. A record from this system of records may be disclosed, as a routine use, in the course of presenting evidence to a court, magistrate, or administrative tribunal, including disclosures to opposing counsel in the course of settlement negotiations.
3. A record in this system of records may be disclosed, as a routine use, to a Member of Congress submitting a request involving an individual, to whom the record pertains, when the individual has requested assistance from the Member with respect to the subject matter of the record.
4. A record in this system of records may be disclosed, as a routine use, to a contractor of the Agency having need for the information in order to perform a contract. Recipients of information shall be required to comply with the requirements of the Privacy Act of 1974, as amended, pursuant to 5 U.S.C. 552a(m).
5. A record related to an International Application filed under the Patent Cooperation Treaty in this system of records may be disclosed, as a routine use, to the International Bureau of the World Intellectual Property Organization, pursuant to the Patent Cooperation Treaty.
6. A record in this system of records may be disclosed, as a routine use, to another federal agency for purposes of National Security review (35 U.S.C. 181) and for review pursuant to the Atomic Energy Act (42 U.S.C. 218(c)).
7. A record from this system of records may be disclosed, as a routine use, to the Administrator, General Services, or his/her designee, during an inspection of records conducted by GSA as part of that agency's responsibility to recommend improvements in records management practices and programs, under authority of 44 U.S.C. 2904 and 2906. Such disclosure shall be made in accordance with the GSA regulations governing inspection of records for this purpose, and any other relevant (i.e., GSA or Commerce) directive. Such disclosure shall not be used to make determinations about individuals.
8. A record from this system of records may be disclosed, as a routine use, to the public after either publication of the application pursuant to 35 U.S.C. 122(b) or issuance of a patent pursuant to 35 U.S.C. 151. Further, a record may be disclosed, subject to the limitations of 37 CFR 1.14, as a routine use, to the public if the record was filed in an application which became abandoned or in which the proceedings were terminated and which application is referenced by either a published application, an application open to public inspection or an issued patent.
9. A record from this system of records may be disclosed, as a routine use, to a Federal, State, or local law enforcement agency, if the USPTO becomes aware of a violation or potential violation of law or regulation.

MASIMO 2056
Apple v. Masimo
IPR2024-00242

Notice of Allowability	Application No. 16/532,065	Applicant(s) Al-Ali, Ammar	
	Examiner MARJAN FARDANESH	Art Unit 3791	AIA (FITF) Status Yes

-- The MAILING DATE of this communication appears on the cover sheet with the correspondence address--

All claims being allowable, PROSECUTION ON THE MERITS IS (OR REMAINS) CLOSED in this application. If not included herewith (or previously mailed), a Notice of Allowance (PTOL-85) or other appropriate communication will be mailed in due course. **THIS NOTICE OF ALLOWABILITY IS NOT A GRANT OF PATENT RIGHTS.** This application is subject to withdrawal from issue at the initiative of the Office or upon petition by the applicant. See 37 CFR 1.313 and MPEP 1308.

1. ☑ This communication is responsive to amendments filed on 02/05/2020.
   ☐ A declaration(s)/affidavit(s) under **37 CFR 1.130(b)** was/were filed on _____.

2. ☐ An election was made by the applicant in response to a restriction requirement set forth during the interview on _____; the restriction requirement and election have been incorporated into this action.

3. ☑ The allowed claim(s) is/are 2,4-10,12-21,23-24 and 26-33 . As a result of the allowed claim(s), you may be eligible to benefit from the **Patent Prosecution Highway** program at a participating intellectual property office for the corresponding application. For more information, please see **http://www.uspto.gov/patents/init_events/pph/index.jsp** or send an inquiry to **PPHfeedback@uspto.gov.**

4. ☐ Acknowledgment is made of a claim for foreign priority under 35 U.S.C. § 119(a)-(d) or (f).

   Certified copies:

   a) ☐All b) ☐ Some *c) ☐ None of the:

   1. ☐ Certified copies of the priority documents have been received.
   2. ☐ Certified copies of the priority documents have been received in Application No. _____ .
   3. ☐ Copies of the certified copies of the priority documents have been received in this national stage application from the International Bureau (PCT Rule 17.2(a)).

   * Certified copies not received: _____ .

Applicant has THREE MONTHS FROM THE "MAILING DATE" of this communication to file a reply complying with the requirements noted below. Failure to timely comply will result in ABANDONMENT of this application.
THIS THREE-MONTH PERIOD IS NOT EXTENDABLE.

5. ☐ CORRECTED DRAWINGS (as "replacement sheets") must be submitted.
   ☐ including changes required by the attached Examiner's Amendment / Comment or in the Office action of Paper No./Mail Date _____ .

   Identifying indicia such as the application number (see 37 CFR 1.84(c)) should be written on the drawings in the front (not the back) of each sheet. Replacement sheet(s) should be labeled as such in the header according to 37 CFR 1.121(d).

6. ☐ DEPOSIT OF and/or INFORMATION about the deposit of BIOLOGICAL MATERIAL must be submitted. Note the attached Examiner's comment regarding REQUIREMENT FOR THE DEPOSIT OF BIOLOGICAL MATERIAL.

Attachment(s)

1. ☐ Notice of References Cited (PTO-892)
2. ☑ Information Disclosure Statements (PTO/SB/08), Paper No./Mail Date See Continuation Sheet.
3. ☐ Examiner's Comment Regarding Requirement for Deposit of Biological Material _____.
4. ☐ Interview Summary (PTO-413), Paper No./Mail Date. _____.
5. ☑ Examiner's Amendment/Comment
6. ☐ Examiner's Statement of Reasons for Allowance
7. ☐ Other _____.

/MARJAN FARDANESH/ Examiner, Art Unit 3791	/ERIC F WINAKUR/ Primary Examiner, Art Unit 3791

Continuation of Attachment(s) 2. Information Disclosure Statements (PTO/SB/08), Paper No./Mail Date: 11/15/2019,12/03/2019,01/07/2020,01/15/2020

MASIMO 2056
Apple v. Masimo
IPR2024-00242

Notice of Pre-AIA or AIA Status

1. The present application, filed on or after March 16, 2013, is being examined under the first inventor to file provisions of the AIA.

EXAMINER'S AMENDMENT

2. An examiner's amendment to the record appears below. Should the changes and/or additions be unacceptable to applicant, an amendment may be filed as provided by 37 CFR 1.312. To ensure consideration of such an amendment, it MUST be submitted no later than the payment of the issue fee.

Authorization for this examiner's amendment was given in an interview with Mr. Jarom Kesler on 02/12/2020.

The application has been amended as follows:

Claim 2 was amended as follows:

2. A physiological monitoring device comprising:

a plurality of emitters~~, wherein each of the plurality of emitters is~~ configured to emit light in a first shape ~~proximate a wrist of a user~~;

a material positioned between the plurality of emitters and a tissue measurement site on a wrist of a user, the material configured to alter the~~a~~ first shape into a second shape by which the light emitted from one or more of the plurality of emitters is distributed onto a surface of the tissue measurement site;

a plurality of detectors configured to detect the light after attenuation by tissue, the plurality of detectors further configured to output at least one signal responsive to the detected light;

a surface comprising a dark-colored coating, the surface positioned between the plurality of detectors and the tissue, wherein an opening defined in

MASIMO 2056
Apple v. Masimo
IPR2024-00242

the dark-colored coating is configured to allow at least a portion of light reflected from the tissue to pass through the surface;

a light block configured to prevent at least a portion of the light emitted from the plurality of emitters from reaching the plurality of detectors without first reaching the tissue; and

a processor configured to receive and process one or more signals responsive to the at least one outputted signal and determine a physiological parameter of the user responsive to the one or more signals.

Claim 13 was amended as follows:

13. The physiological monitoring device of Claim 2, wherein the light emitted from the one or more of the plurality of emitters comprises a Gausian intensity profile after interaction with the material.

Claim 14 was amended as follows:

14. The physiological monitoring device of Claim 2, wherein the ~~altered~~ second shape ~~of the light after interaction with the material~~ comprises a circular geometry.

Claim 17 was amended as follows:

17. A method of measuring a physiological parameter, the method comprising:

emitting, from a plurality of emitters, light proximate a wrist of a user in an initial emitted pattern;

shaping at least a portion of the light emitted from the plurality of emitters before the light reaches a tissue measurement site to define an altered ~~surface area shape~~ pattern relative to the initial emitted pattern on the tissue measurement site;

permitting light reflected from tissue of the user to pass through an opening in a dark-colored coating on a surface and detecting, with a detector, at least a portion of the reflected light passing through the opening, wherein the surface is positioned between the detector and the tissue;

MASIMO 2056
Apple v. Masimo
IPR2024-00242

preventing at least a portion of the light emitted from the plurality of emitters from reaching the detector without first reaching the tissue with a light block;

outputting, from the detector, at least one signal responsive to the detected light; and

electronically processing one or more signals responsive to the outputted at least one signal to determine a physiological parameter.

Claim 27 was amended as follows:

27. A system configured to measure one or more physiological parameters of a user, the system comprising:

a physiological monitoring device comprising:

a plurality of emitters configured to emit light proximate a wrist of a user in a first shape;

a material positioned between the plurality of emitters and a tissue measurement site, the material configured to alter the~~a~~ first shape into a second shape by which the light emitted from one or more of the plurality of emitters is distributed on the tissue measurement site;

a plurality of detectors configured to detect the light after attenuation by tissue, the plurality of detectors further configured to output at least one signal responsive to the detected light;

a surface comprising a dark-colored coating, the surface positioned between the plurality of detectors and the tissue, wherein an opening defined in the dark-colored coating is configured to allow at least a portion of light reflected from the tissue to pass through the surface;

a light block configured to prevent at least a portion of light from the plurality of emitters from reaching the plurality of detectors without first reaching the tissue; and

a processor configured to receive and process one or more signals responsive to the outputted at least one signal and determine a physiological parameter of the user responsive to the one or more signals; and

MASIMO 2056
Apple v. Masimo
IPR2024-00242

a processing device configured to wirelessly receive physiological parameter data from the physiological monitoring device, wherein the processing device comprises a user interface, a storage device, and a network interface configured to wirelessly communicate with the physiological monitoring device, and wherein the user interface includes a touch-screen display configured to present visual feedback responsive to the physiological parameter data.

Claim 32 was amended as follows:

32. The system of Claim 27, wherein the ~~altered~~ second shape comprises a width and a length, and wherein the width is different from the length.

Conclusion

3. Any inquiry concerning this communication or earlier communications from the examiner should be directed to MARJAN FARDANESH whose telephone number is (571)270-5508. The examiner can normally be reached on Monday-Friday 9:00-17:00.

Examiner interviews are available via telephone, in-person, and video conferencing using a USPTO supplied web-based collaboration tool. To schedule an interview, applicant is encouraged to use the USPTO Automated Interview Request (AIR) at http://www.uspto.gov/interviewpractice.

If attempts to reach the examiner by telephone are unsuccessful, the examiner's supervisor, Jacqueline Cheng can be reached on (571)272-5596. The fax phone number for the organization where this application or proceeding is assigned is 571-273-8300.

Information regarding the status of an application may be obtained from the Patent Application Information Retrieval (PAIR) system. Status information for published applications may be obtained from either Private PAIR or Public PAIR.

MASIMO 2056
Apple v. Masimo
IPR2024-00242

Status information for unpublished applications is available through Private PAIR only.

For more information about the PAIR system, see https://ppair-

my.uspto.gov/pair/PrivatePair. Should you have questions on access to the Private

PAIR system, contact the Electronic Business Center (EBC) at 866-217-9197 (toll-free).

If you would like assistance from a USPTO Customer Service Representative or access

to the automated information system, call 800-786-9199 (IN USA OR CANADA) or 571-

272-1000.

/ERIC F WINAKUR/
Primary Examiner, Art Unit 3791

/MARJAN FARDANESH/
Examiner, Art Unit 3791

MASIMO 2056
Apple v. Masimo
IPR2024-00242

IN THE UNITED STATES PATENT AND TRADEMARK OFFICE

Inventor	:	Ammar Al-Ali
App. No	:	16/532,065
Filed	:	August 5, 2019
For	:	PHYSIOLOGICAL MONITORING DEVICES, SYSTEMS, AND METHODS
Examiner	:	Fardanesh, Marjan
Art Unit	:	3791
Conf No.	:	1092

SUMMARY OF INTERVIEW

Commissioner for Patents
P.O. Box 1450
Alexandria, VA 22313-1450

Dear Commissioner:

A telephonic interview was conducted and attended by Examiner Fardanesh and Applicant's representative Jarom D. Kesler (Reg. No. 57,046) on February 13, 2020. Agreement was reached that Applicant's proposed claim amendments, which reflect a change in shape of emitted light beyond a change in size, defined over the Examiner's citation of judicial notice of emitted light passing through a lens. Applicant thanks Examiner Fardanesh for her time and consideration.

Please charge any additional fees, including any fees for additional extension of time, or credit overpayment to Deposit Account No. 11-1410.

Respectfully submitted,

KNOBBE, MARTENS, OLSON & BEAR, LLP

Dated: March 23, 2020

By: /Jarom Kesler/
Jarom D. Kesler
Registration No. 57,046
Registered Practitioner
Customer No. 64735
(949) 760-0404

MASIMO 2056
Apple v. Masimo
IPR2024-00242

IN THE UNITED STATES PATENT AND TRADEMARK OFFICE

First Inventor	:	Ammar Al-Ali
App. No.	:	16/532,065
Filed	:	August 5, 2019
For	:	PHYSIOLOGICAL MONITORING DEVICES, SYSTEMS, AND METHODS
Examiner	:	Fardanesh, Marjan
Art Unit	:	3791
Conf. No.	:	1092

COMMENTS ON NOTICE OF ALLOWANCE

Mail Stop Issue Fee
Commissioner for Patents
P.O. Box 1450
Alexandria, VA 22313-1450

Dear Commissioner:

Applicant thanks the Examiner for acknowledging allowability of each of the pending claims in the Notice of Allowance mailed March 9, 2020. The Examiner's Amendment indicates that Claim 13 was amended, however, no claim amendment was made to this claim.

Please charge any additional fees, including any fees for additional extension of time, or credit overpayment to Deposit Account No. 11-1410.

Respectfully submitted,

KNOBBE, MARTENS, OLSON & BEAR, LLP

Dated: March 23, 2020

By: /Jarom Kesler/
Jarom D. Kesler
Registration No. 57,046
Registered Practitioner
Customer No. 64735
(949) 760-0404

MASIMO 2056
Apple v. Masimo
IPR2024-00242